1985 TOYOTA TRUCK & 4-RUNNER Gasoline REPAIR MANUAL

INTRODUCTION IN
MAINTENANCE MA
ENGINE MECHANICAL EM
EMISSION CONTROL SYSTEM EC
EFI SYSTEM FI
FUEL SYSTEM FU
COOLING SYSTEM CO
LUBRICATION SYSTEM LU
IGNITION SYSTEM IG
STARTING SYSTEM ST
CHARGING SYSTEM CH
CLUTCH CL
MANUAL TRANSMISSION MT
AUTOMATIC TRANSMISSION AT
TRANSFER TF
PROPELLER SHAFT PR
FRONT AXLE AND SUSPENSION FA
REAR AXLE AND SUSPENSION RA
BRAKE SYSTEM BR
STEERING SR
BODY ELECTRICAL SYSTEM BE
BODY BO
WINCH WI
AIR CONDITIONING SYSTEM AC
SERVICE SPECIFICATIONS A
STANDARD BOLT TIGHTENING TORQUE B
SST AND SSM C
AUTOMATIC TRANSMISSION HYDRAULIC CIRCUIT D
ELECTRICAL WIRING DIAGRAMS E

©1984 TOYOTA MOTOR CORPORATION
All rights reserved. This book may not be reproduced or copied, in whole or in part, without the written permission of Toyota Motor Corporation.

INTRODUCTION

	Page
HOW TO USE THIS MANUAL	IN-2
IDENTIFICATION INFORMATION	IN-4
GENERAL REPAIR INSTRUCTIONS	IN-4
PRECAUTIONS FOR VEHICLES EQUIPPED WITH A CATALYTIC CONVERTER	IN-7
VEHICLE LIFT AND SUPPORT LOCATIONS	IN-8
ABBREVIATIONS USED IN THIS MANUAL	IN-9

HOW TO USE THIS MANUAL

To assist in finding your way through the manual, the Secti
Title and major heading are given at the top of every page.

An **INDEX** is provided on the first page of each section to guide you to the item to be repaired.

At the beginning of each section, **PRECAUTIONS** are given that pertain to *all* repair operations contained in that section. *Read these precautions before starting any repair task.*

TROUBLESHOOTING tables are included for each system to help you diagnose the system problem and find the cause. The repair for each possible cause is referenced in the remedy column to quickly lead you to the solution.

REPAIR PROCEDURES

Most repair operations begin with an overview illustration. It identifies the components and shows how the parts fit together.

Example:

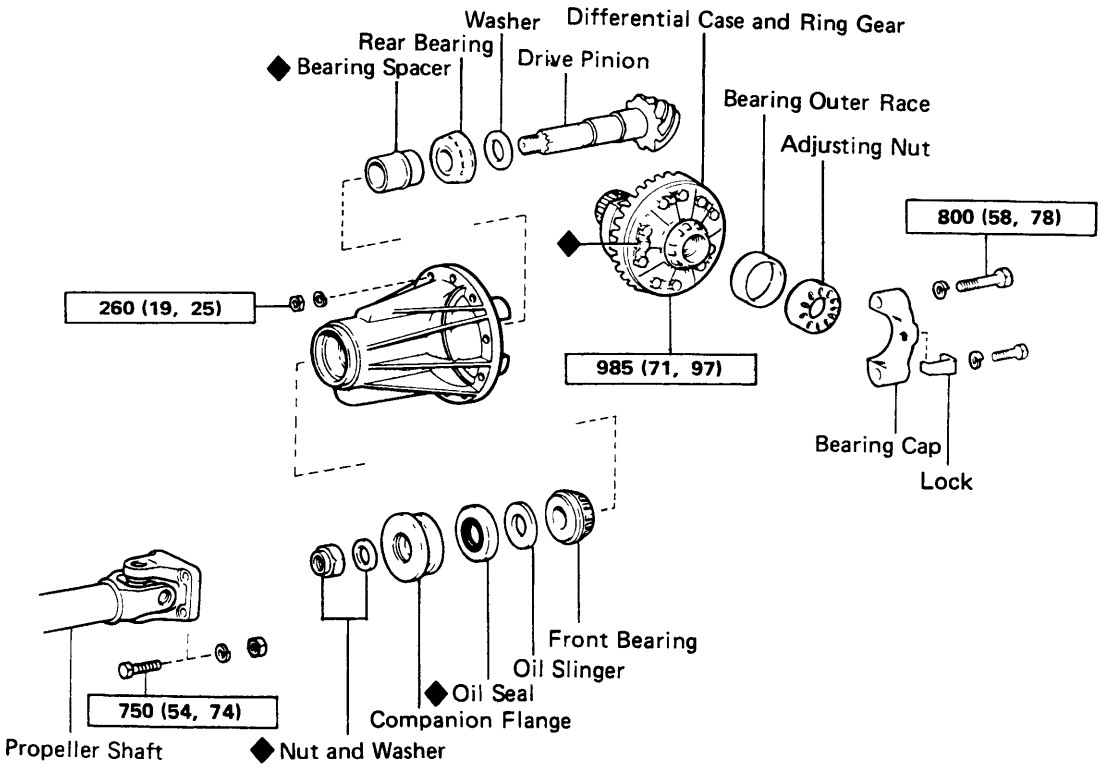

kg-cm (ft-lb, N·m) : Tightening torque
◆ : Non-reusable part

RA0188

The procedures are presented in a step-by-step format:

- The photo or illustration shows *what* to do and *where* to do it.
- The task heading tells *what* to do.
- The detailed text tells *how* to perform the task and gives other information such as specifications and warnings.

Example:

Photograph or illustration: what to do and where

Task heading: what to do

INSTALL DRIVE SHAFT ON CENTER SUPPORT BEARING FLANGE

(a) Align the marks on the flanges and connect the flanges with four bolts and nuts.

(b) Torque the bolts and nuts.

Torque: 750 kg-cm (54 ft-lb, 74 N·m)

Detail text: how to do it

Specification

This format enables the experienced technician to have a FAST TRACK. He can read the task headings and only refer to the detailed text when he needs it. Important specifications and warnings always stand out in bold type.

REFERENCES

References have been kept to a minimum. However, when they are required you are given the *page* to go to.

SPECIFICATIONS

Specifications are presented in bold type throughout the text in the applicable step. You never have to leave the procedure to look up your specs. All specifications are also found in Appendix A, specifications for quick reference.

WARNINGS, CAUTIONS, NOTES:

- WARNINGS are presented in bold type, and indicate there is a possibility of injury to you or other pepole.
- CAUTIONS are also presented in bold type, and indicate the possibility of damage to the components being repaired.
- NOTES are separated from the text but do not appear in bold. They provide additional information to help you efficiently perform the repair.

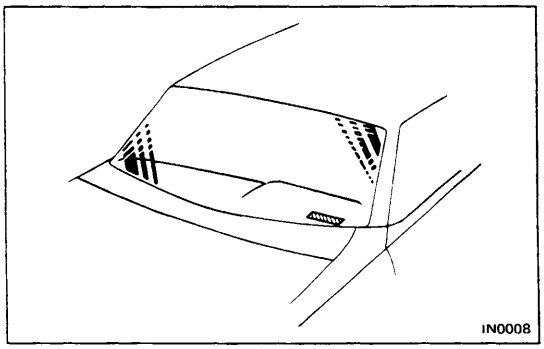

IDENTIFICATION INFORMATION

VEHICLE IDENTIFICATION NUMBER

The vehicle identification number is stamped on top of the instrument panel.

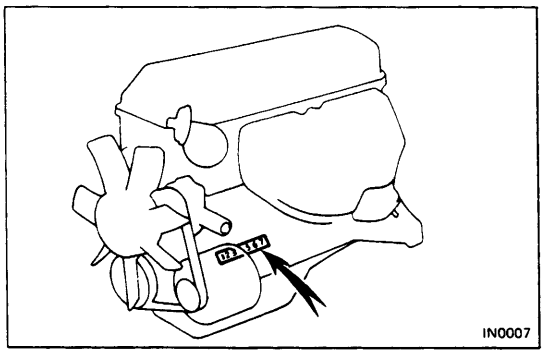

ENGINE SERIAL NUMBER

The engine serial number is stamped on the left side of the cylinder block.

GENERAL REPAIR INSTRUCTIONS

1. Use fender seat and floor covers to keep the vehicle clean and prevent damage.
2. During disassembly, keep parts in order to facilitate reassembly.
3. Observe the following:
   (a) Before performing electrical work, disconnect the cable from the battery terminal.
   (b) If it is necessary to disconnect the battery for inspection or repair, always disconnect the cable from the negative (—) terminal which is grounded to the vehicle body.
   (c) To prevent damage to the battery terminal post, loosen the terminal nut and raise the cable straight up without twisting it or prying it.
   (d) Clean the battery terminal posts and cable terminals with a shop rag. Do not scrape them with a file or such.
   (e) Install the cable terminal to the battery post with the nut loose, and tighten the nut after installation. Do not use a hammer or such to tap the terminal onto the post.
   (f) Be sure the cover for the positive (+) terminal is properly in place.
4. Check hose and wiring connectors to make sure that th' are secure and correct.

5. Non-reusable Parts
   (a) Always replace cotter pins, gaskets, O-rings and oil seals etc. with new ones.
   (b) Non-reusable parts are indicated in the component illustrations by the symbol "◆".

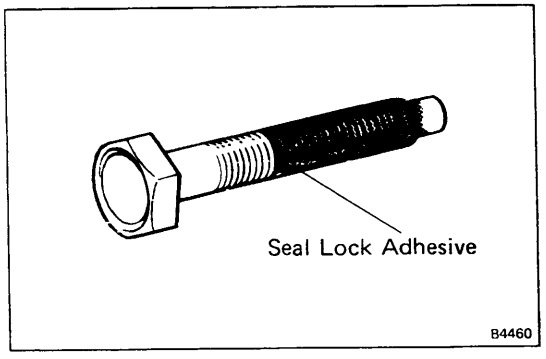

6. Precoated Parts

   Precoated parts are the bolts, nuts, etc. which are coated with a seal lock adhesive at the factory.
   (a) If a precoated part is tightened, loosened or caused to move in any way, it must be recoated with the specified adhesive.
   (b) Recoating of Precoated Parts
      (1) Clean off the old adhesive from the bolt, nut or installation part threads.
      (2) Dry with compressed air.
      (3) Apply the specified seal lock adhesive to the bolt or nut threads.
   (c) Precoated parts are indicated in the component illustrations by the symbol "★".

7. When necessary, use a sealer on gaskets to prevent leaks.
8. Carefully observe all specifications for bolt tightening torques. Always use a torque wrench.
9. Use of special service tools (SST) and special service materials (SSM) may be required, depending on the nature of the repair. Be sure to use SST and SSM where specified and follow the proper work procedure. A list of SST and SSM can be found at the back of this manual.
10. When replacing fuses, be sure the new fuse is the correct amperage rating. DO NOT exceed the fuse amp rating or use one of a lower rating.
11. Care must be taken when jacking up and supporting the vehicle. Be sure to lift and support the vehicle at the proper locations. (See page IN-8)
    (a) If the vehicle is to be jacked up only at the front or rear end, be sure to block the wheels in order to ensure safety.
    (b) After the vehicle is jacked up, be sure to support it on stands. It is extremely dangerous to do any work on the vehicle raised on jack alone, even for a small job that can be finished quickly.

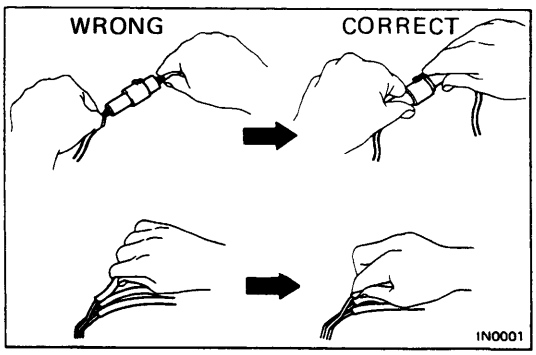

12. Observe the following precautions to avoid damage to the parts:
    (a) To disconnect vacuum hoses, pull on the end, not the middle of the hose.
    (b) To pull apart electrical connectors, pull on the connector itself, not the wires.
    (c) Be careful not to drop electrical components, such as sensors or relays. If they are dropped on a hard floor, they should be replaced and not reused.
    (d) When steam cleaning an engine, protect the distributor, coil, air filter, carburetor intake, air pump and VCV from water.
    (e) Never use an impact wrench to remove or install thermo switches or thermo sensors.
    (f) When checking continuity at the wire connector, insert the tester probe carefully to prevent terminals from bending.
    (g) When using a vacuum gauge, never force the hose onto a connector that is too large. Use a step-down adapter instead. Once the hose has been stretched, it may leak.

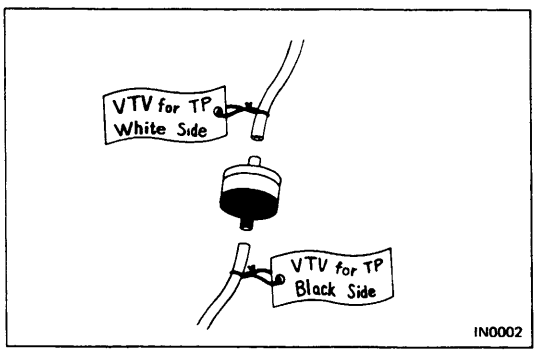

13. Tag hoses before disconnecting them:
    (a) When disconnecting vacuum hoses, use tags to identify how they should be reconnected.
    (b) After completing a job, double check that the vacuum hoses are properly connected. A label under the hood shows the proper layout.

PRECAUTIONS FOR VEHICLES EQUIPPED WITH A CATALYTIC CONVERTER

WARNING: If large amounts of unburned gasoline flow into the converter, it may overheat and create a fire hazard. To prevent this, observe the following precautions and explain them to your customer.

1. **Use only unleaded gasoline.**

2. **Avoid prolonged idling.**

   Avoid running the engine at fast idle speed for more than 10 minutes and at idle speed for more than 20 minutes.

3. **Avoid spark jump test.**

   (a) Spark jump test only when absolutely necessary. Perform this test as rapidly as possible.

   (b) While testing, never race the engine.

4. **Avoid prolonged engine compression measurement.**

   Engine compression tests must be made as rapidly as possible.

5. **Do not run engine when fuel tank is nearly empty.**

   This may cause the engine to misfire and create an extra load on the converter.

6. **Avoid coasting with ignition turned off and prolonged braking.**

7. **Do not dispose of used catalyst along with parts contaminated with gasoline or oil.**

VEHICLE LIFT AND SUPPORT LOCATIONS

[4WD]

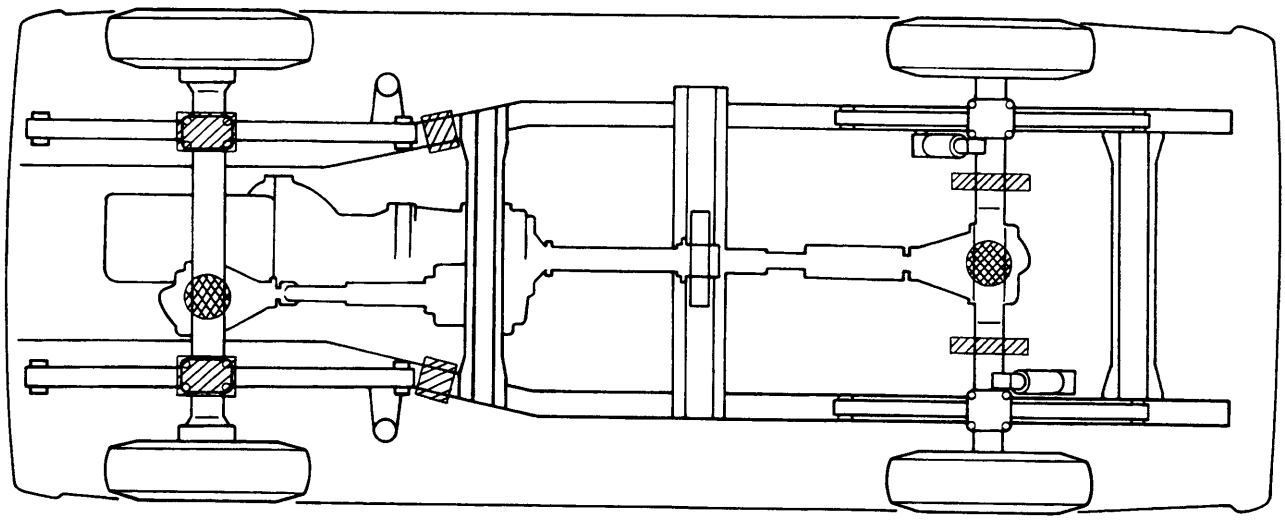

[2WD]

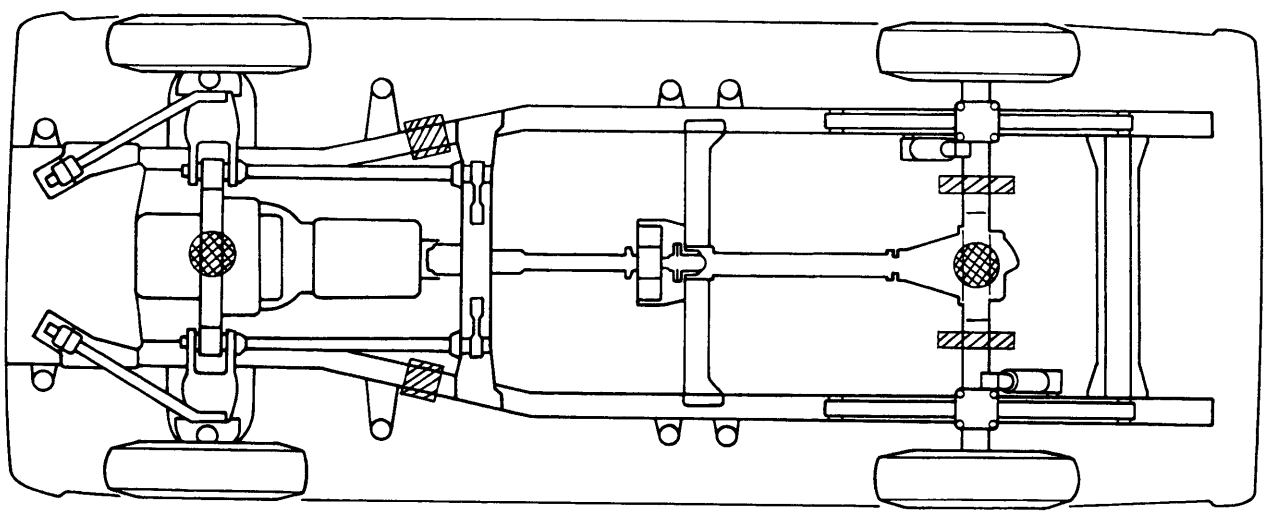

JACK POSITION .....

Front ..... [2WD] Center of crossmember
[4WD] Center of front axle housing

Rear ..... Center of rear axle housing

SUPPORT POSITION

Safety stand .....

IN0011
IN0012

ABBREVIATIONS USED IN THIS MANUAL

AAP	Auxiliary Acceleration Pump
A/C	Air Conditioner
AI	Air Injection
APPROX.	Approximate
AS	Air Suction
A/T, ATM	Automatic Transmission
ATF	Automatic Transmission Fluid
BTDC	Before Top Dead Center
BVSV	Bi-metal Vacuum Switching Valve
CALIF.	Vehicles Sold in California
CB	Choke Breaker
C&C	Cab and Chassis
CMH	Cold Mixture Heater
DP	Dash Pot
EACV	Electronic Air Control Valve
ECU	Electronic Control Unit
EFI	Electronic Fuel Injection
EGR	Exhaust Gas Recirculaion
ESA	Electronic Spark Advance
EVAP	Evaporative (Emission Control)
EX	Exhaust (manifold, valve)
Ex.	Except
FED.	Vehicles Sold in USA except California
HAC	High Altitude Compensation
HAI	Hot Air Intake
IN	Intake (manifold, valve), Inch
IG	Ignition
LH	Left-hand
MAS	Mixture Adjusting Screw
MC	Mixture Control
MP	Multipurpose
M/T, MTM	Manual Transmission
OC	Oxidation Catalyst
OD	Overdrive
OPT	Option
O/S	Oversized
PCV	Positive Crankcase Ventilation
PS	Power Steering
RH	Right-hand
SC	Spark Control
SSM	Special Service Materials
SST	Special Service Tools
STD	Standard
S/W	Switch
TCCS	Toyota Computer Control System
TDC	Top Dead Center
TWC	Three Way Catalyst
U/S	Undersized
VCS	Vacuum Control Switch
VCV	Vacuum Control Valve
VSV	Vacuum Switching Valve
VTV	Vacuum Transmitting Valve
2WD	Two Wheel Drive Vehicles (4x2)
4WD	Four Wheel Drive Vehicles (4x4)
Short	Short wheel base
Long	Long wheel base
w/	With
w/o	Without

MAINTENANCE

	Page
MAINTENANCE SCHEDULE	MA-2
MAINTENANCE OPERATIONS	MA-4
GENERAL MAINTENANCE	MA-18

GENERAL NOTES:

- Every service item in the periodic maintenance list must be performed.
- Failure to do even one item can cause the engine to run poorly and increase exhaust emissions.

MAINTENANCE SCHEDULE

Maintenance operations: A = Check and/or adjust if necessary;
R = Replace, change or lubricate;
I = Inspect and correct or replace if necessary

NORMAL CONDITION SCHEDULE

System	Service interval (Odometer reading or months, whichever comes first) / Maintenance items		Maintenance services beyond 60,000 miles (96,000 km) should be performed at the same intervals shown in each maintenance schedule.								See page (item No.)
		Miles x 1,000	10	15	20	30	40	45	50	60	
		Km x 1,000	16	24	32	48	64	72	80	96	
		Months	12	18	24	36	48	54	60	72	
ENGINE	Valve clearance*					A				A	MA-7 (item 13)
	Drive belts (1)					I				I	MA-4 (item 1)
	Engine oil and oil filter*		R		R	R	R		R	R	MA-5 (item 6)
	Engine coolant (2)									R	MA-5 (item 7)
	Exhaust pipes and mountings					I				I	MA-7 (item 11)
FUEL	Idle speed	22R-E engine (3)	A			A				A	MA-8 (item 14
	Idle speed and fast idle speed	22R engine (4)				A					MA-8 (item 14) MA-9 (item 15)
	Air filter*					R				R	MA-5 (item 5)
	Fuel lines and connections					I				I	MA-7 (item 10)
	Fuel filler cap gasket									R	MA-7 (item 9)
IGNITION	Spark plugs**					R				R	MA-4 (item 2)
EVAP	Charcoal canister	Calif. only								I	MA-6 (item 8)
EXHAUST	Oxygen sensor* (5)	Fed. 22R-E engine only								R	MA-7 (item 12
BRAKES	Brake linings and drums			I		I		I		I	MA-11 (item 1.
	Brake pads and discs			I		I		I		I	MA-11 (item 18)
	Brake line pipes and hoses			I		I		I		I	MA-11 (item 16)
CHASSIS	Steering linkage			I		I		I		I	MA-11 (item 19)
	Ball joints and dust covers (RN 2WD)			I		I		I		I	MA-12 (item 21)
	Automatic transmission (6), manual transmission, transfer (RN 4WD), differential and steering gear box (6) oil			I		I		I		I	MA-12 (item 20) MA-12 (item 22) MA-13 (item 23)
	Front wheel bearing grease					R				R	MA-14 (item 26)
	Steering knuckle and chassis grease (RN 4WD)			R		R		R		R	MA-14 (item 27)
	Propeller shaft grease (RN 4WD) (7)			R		R		R		R	MA-14 (item 27)
	Bolts and nuts on chassis and body			I		I		I		I	MA-16 (item 28)

Maintenance services indicated by a star (★) or asterisk (*) are required under the terms of the Emission Control Systems Warranty. See Owner's Guide for complete warranty information.

★ For vehicles sold in California

* For vehicles sold outside California

NOTE:

(1) After 60,000 miles (96,000 km) or 72 months, inspect every 10,000 miles (16,000 km) or 12 months.
(2) After 60,000 miles (96,000 km) or 72 months, replace every 30,000 miles (48,000 km) or 36 months.
(3) After 30,000 miles (48,000 km) or 36 months, adjust every 30,000 miles (48,000 km) or 36 months.
(4) Adjustment at 30,000 miles (48,000 km) or 36 months only
(5) Replace at 60,000 miles (96,000 km) or 72 months only.
(6) Inspect the automatic transmission and steering gear box for oil leakage only.
(7) If the propeller shaft has been immersed in water, it should be re-greased within 24 hours.

Follow the severe condition schedule if vehicle is operated mainly under one or more of the following severe conditions:

- Pulling a trailer
- Repeated short trips
- Driving on rough and/or muddy roads
- Driving on dusty roads
- Driving in extremely cold weather and/or on salted roads

SEVERE CONDITION SCHEDULE

System	Service interval (Odometer reading or months, whichever comes first) / Maintenance items		Maintenance services beyond 60,000 miles (96,000 km) should be performed at the same intervals shown in each maintenance schedule.															See page (item No.)
		Miles x 1,000	5	7.5	10	15	20	22.5	25	30	35	37.5	40	45	50	52.5	55	60	
		Km x 1,000	8	12	16	24	32	36	40	48	56	60	64	72	80	84	88	96	
		Months	6	9	12	18	24	27	30	36	42	45	48	54	60	63	66	72	
ENGINE	Valve clearance*									A								A	MA-7 (item 13)
	Drive belts [1]									I								I	MA-4 (item 1)
	Engine oil and oil filter*		R		R	R	R		R	R	R		R	R	R		R	R	MA-5 (item 6)
	Engine coolant [2]																	R	MA-5 (item 7)
	Exhaust pipes and mountings					I				I				I				I	MA-7 (item 11)
FUEL	Idle speed	22R-E engine [3]			A					A								A	MA-8 (item 14)
	Idle speed and fast idle speed	22R engine [4]								A									MA-8 (item 14) MA-9 (item 15)
	Air filter* [9]		I		I	I	I		I	R	I		I	I	I		I	R	MA-5 (item 4, 5)
	Fuel lines and connections									I								I	MA-7 (item 10)
	Fuel filler cap gasket																	R	MA-7 (item 9)
IGNITION	Spark plugs**									R								R	MA-4 (item 2)
	Ignition wiring and distributor cap**		(5)																MA-5 (item 3)
EVAP	Charcoal canister	Calif only																I	MA-6 (item 8)
EXHAUST	Oxygen sensor* [6]	Fed. 22R-E engine only																R	MA-7 (item 12)
BRAKES	Brake linings and drums			I		I		I		I		I		I		I		I	MA-11 (item 17)
	Brake pads and discs			I		I		I		I		I		I		I		I	MA-11 (item 18)
	Brake line pipes and hoses					I				I				I				I	MA-11 (item 16)
CHASSIS	Steering linkage [10]			I		I		I		I		I		I		I		I	MA-11 (item 19)
	Ball joints and dust covers (RN 2WD)			I		I		I		I		I		I		I		I	MA-12 (item 21)
	Automatic transmission [7], manual transmission, transfer (RN 4WD) differential and steering gear box [7] oil					R				R				R				R	MA-12 (item 20) MA-13 (item 24) MA-14 (item 25)
	Front wheel bearing grease									R								R	MA-14 (item 26)
	Steering knuckle and chassis grease (RN 4WD)			R		R		R		R		R		R		R		R	MA-14 (item 27)
	Propeller shaft grease (RN 4WD) [8]			R		R		R		R		R		R		R		R	MA-14 (item 27)
	Bolts and nuts on chassis and body [10]			I		I		I		I		I		I		I		I	MA-16 (item 28)

Maintenance services indicated by a star (★) or asterisk (*) are required under the terms of the Emission Control Systems Warranty. See Owner's Guide for complete warranty information.

★ For vehicles sold in California

* For vehicles sold outside California

NOTE:

(1) After 60,000 miles (96,000 km) or 72 months, inspect every 10,000 miles (16,000 km) or 12 months.

(2) After 60,000 miles (96,000 km) or 72 months, replace every 30,000 miles (48,000 km) or 36 months.

(3) After 30,000 miles (48,000 km) or 36 months, adjust every 30,000 miles (48,000 km) or 36 months.

(4) Adjustment at 30,000 miles (48,000 km) or 36 months only.

(5) In areas where road salt is used, inspect and clean each year just after the snow season.

(6) Replace at 60,000 miles (96,000 km) or 72 months only

(7) Inspect the automatic transmission and steering gear box for oil leakage only.

(8) If the propeller shaft has been immersed in water, it should be re-greased within 24 hours.

(9) Applicable when operating mainly on dusty roads. If not, follow the normal condition schedule.

(10) Applicable when operating mainly on rough and/or muddy roads. If not, follow the normal condition schedule.

MAINTENANCE OPERATIONS

ENGINE

Cold Engine Operations

1. INSPECT DRIVE BELTS

(a) Visually check the drive belt for cracks, oiliness or wear. Check that the belt does not touch the bottom of the pulley groove.

If necessary, replace the drive belt.

(b) Using a belt tension gauge, check the drive belt tension.

Belt tension gauge:

Nippondenso BTG-20 (95506-00020) or
Borroughs No.BT-33-73F

Drive belt tension: Used belt 80 ± 20 lb
New belt 125 ± 25 lb

If necessary, adjust the drive belt tension.

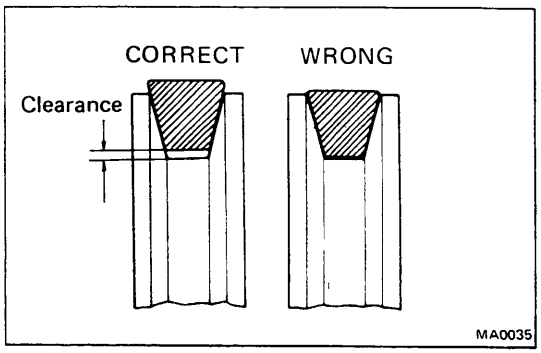

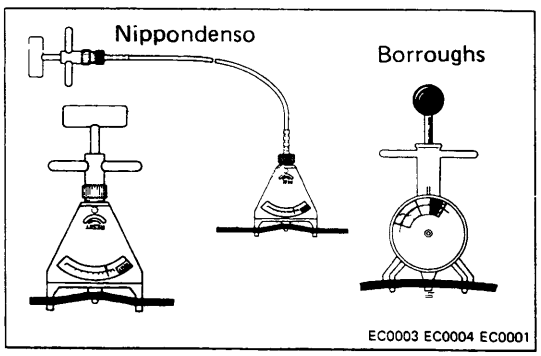

2. REPLACE SPARK PLUGS

(a) Disconnect the spark plug wires at the boot. DO NOT pull on the wires.

(b) Remove the spark plugs.

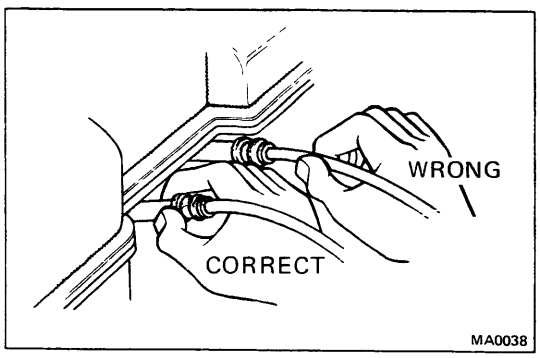

(c) Set the gap on the new plugs.

Gap: 0.8 mm (0.031 in.)

Recommended spark plugs:

ND	W16EXR-U
NGK	BPR5EY

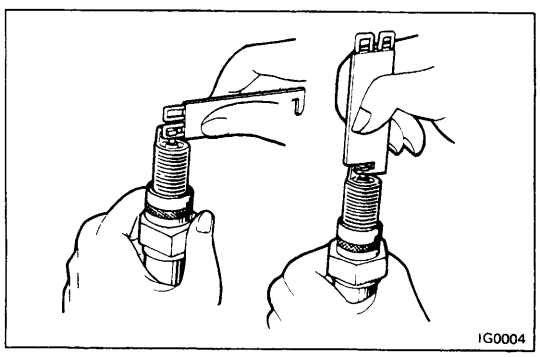

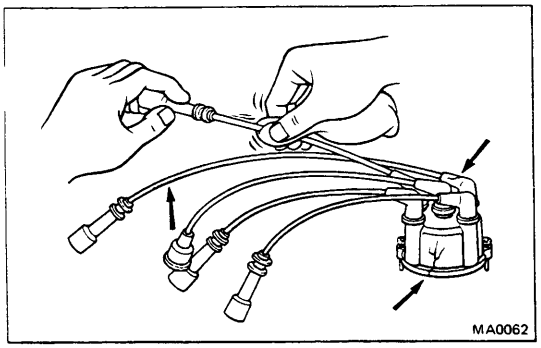
MA0062

3. INSPECT IGNITION WIRING AND DISTRIBUTOR CAP

(a) Remove the distributor cap with the wire.

(b) Clean the distributor cap and wires with a clean cloth.

(c) Visually inspect the wiring for cracks or damage.

(d) Visually inspect the cap for cracks, carbon tracks or wear.

NOTE: In areas where road salt is used, inspection and cleaning should be performed each year just after the snow season.

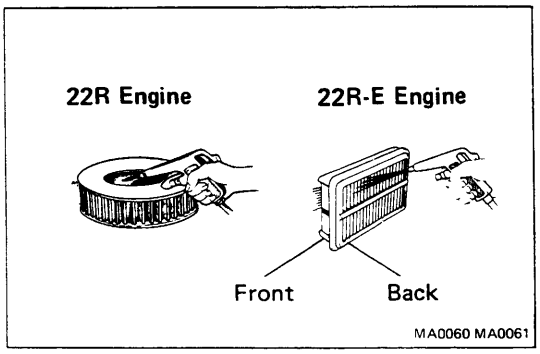

MA0060 MA0061

4. INSPECT AIR FILTER

(a) Visually check that the air cleaner element is not excessively dirty, damaged or oily.

NOTE: Oiliness may indicate a stuck PCV valve.

If necessary, replace the air cleaner element.

(b) Clean the element with compressed air.

First blow from inside (or back side) thoroughly, then blow off the outside (or front side) of the element.

5. REPLACE AIR FILTER

Replace the used air cleaner element with a new one.

6. REPLACE ENGINE OIL AND OIL FILTER

(See page LU-3)

Oil grade: API grade SF or SF/CC multigrade, fuel-efficient and recommended viscosity oil.

Engine oil capacity (Drain and refill with oil filter change): 4.6 liters (4.9 US qts, 4.0 Imp. qts)

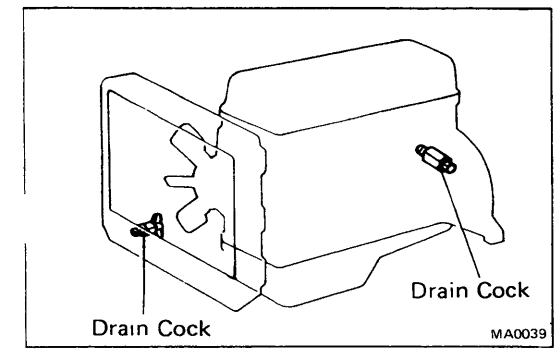

MA0039

7. REPLACE ENGINE COOLANT

(a) Drain the coolant from the radiator and engine drain cocks. (Engine drain is at left rear of engine block.)

(b) Close the drain cocks.

(c) Fill system with coolant.

Coolant capacity (w/heater or air conditioner): 8.4 liters (8.9 US qts, 7.4 Imp. qts)

Use a good brand of ethylene-glycol base coolant, mixed according to the manufacturers instruction.

8. CALIFORNIA VEHICLES ONLY: INSPECT CHARCOAL CANISTER

A. 22R-E ENGINE

(a) Disconnect the hoses to the charcoal canister. Label hoses for correct installation.

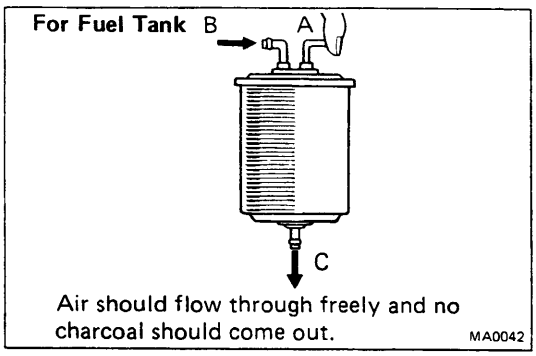

(b) Plug pipe A with your finger and blow compressed air (3 kg/cm², 43 psi or 294 kPa) through pipe B (fuel tank side).

- Check that air comes out of the bottom pipe C without resistance.
- Check that no activated charcoal comes out.

If necessary, replace the charcoal canister.

NOTE: Do not attempt to wash the charcoal.

(c) Connect the hoses to the charcoal canister.

B. 22R ENGINE

(a) Inspect the fuel tank and carburetor charcoal canisters.

For Fuel Tank

(b) Disconnect the hoses to the fuel tank charcoal canister. Label hoses for correct installation.

(c) Plug pipe A with your finger and blow compressed air (3 kg/cm², 43 psi or 294 kPa) through pipe B (fuel tank side).

- Check that air comes out of the bottom pipe C without resistance.
- Check that no activated charcoal comes out.

If necessary, replace the charcoal canister.

NOTE: Do not attempt to wash the charcoal.

(d) Connect the hoses to the charcoal canister.

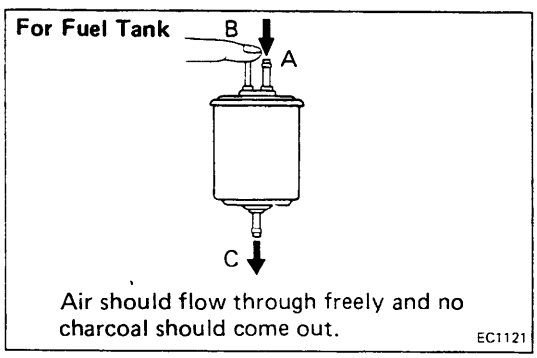

For Carburetor

(e) Disconnect the hoses to the carburetor charcoal canister located below the battery. Label hoses for correct installation.

(f) Plug pipe A with your finger and blow compressed air (3 kg/cm², 43 psi or 294 kPa) through pipe B (Outer vent control valve side).

- Check that air comes out of the bottom pipe C without resistance.
- Check that no activated charcoal comes out.

If necessary, replace the charcoal canister.

NOTE: Do not attempt to wash the charcoal.

(g) Connect the hoses to the charcoal canister.

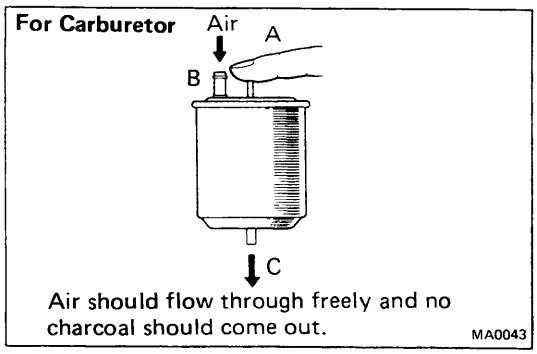

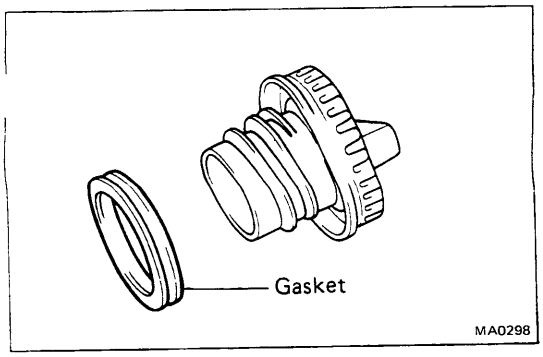

9. REPLACE GASKET IN FUEL FILLER CAP

(a) Remove the old gasket (O-ring) from the fuel filler cap. Do not damage the cap.

(b) Install the new gasket by hand.

(c) Inspect the cap for damage or cracks.

(d) Install the cap and check the torque limiter.

10. INSPECT FUEL LINES AND CONNECTIONS

(22R Engine: See page FU-30)
(22R-E Engine: See page FI-53)

Visually inspect the fuel lines for cracks, leakage or loose connections.

11. INSPECT EXHAUST PIPES AND MOUNTINGS

Visually inspect the pipes, hangers and connections for severe corrosion, leaks or damage.

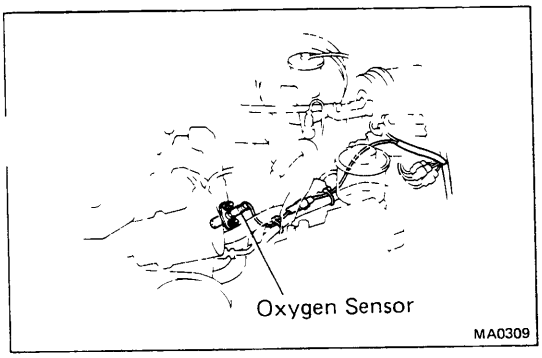

12. FEDERAL 22R-E ENGINE ONLY: REPLACE OXYGEN SENSOR

(a) Disconnect the oxygen sensor wiring connector.

(b) Remove the oxygen sensor and gasket from the exhaust manifold.

(c) Install the new gasket and oxygen sensor to the exhaust manifold.

Torque: 200 kg-cm (14 ft-lb, 20 N·m)

(d) Inspect oxygen sensor operation.
Inspect feed back control.
(See page FI-69)

Hot Engine Operations

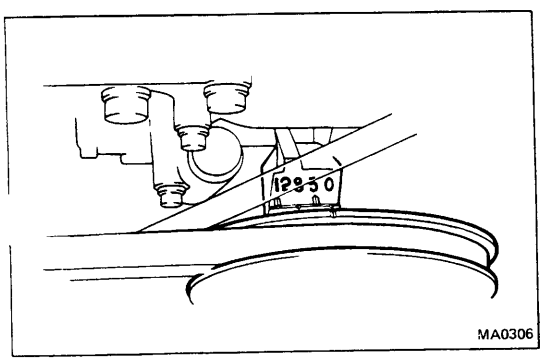

13. ADJUST VALVE CLEARANCE

(a) Warm up the engine to normal operating temperature.

(b) Stop the engine and remove the valve cover.

(c) Set No. 1 cylinder to TDC/compression.

- Turn the crankshaft with a wrench to align the timing marks at TDC. Set the groove on the pulley to the O position.
- Check that the rocker arms on No. 1 cylinder are loose and rockers on No. 4 are tight.

If not, turn the crankshaft one complete revolution and align marks as above.

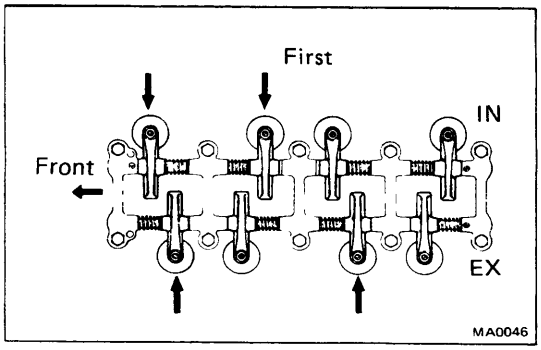

(d) Adjust the clearance of half of the valves.

- Adjust only those valves indicated by arrows.

Valve clearance: Intake 0.20 mm (0.008 in.)
Exhaust 0.30 mm (0.012 in.)

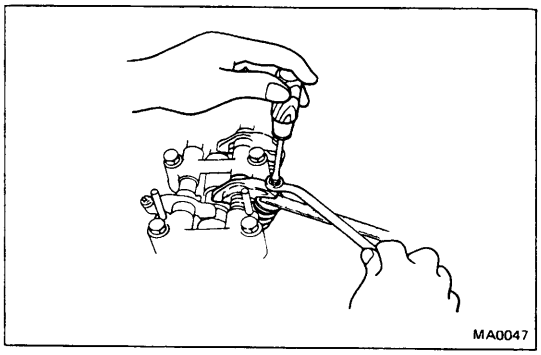

- Use a feeler gauge to measure between the valve stem and rocker arm. Loosen the lock nut and turn the adjusting screw to set the proper clearance. Hold the adjusting screw in position, and tighten the lock nut.
- Recheck the clearance. The feeler gauge should move with a very slight drag.

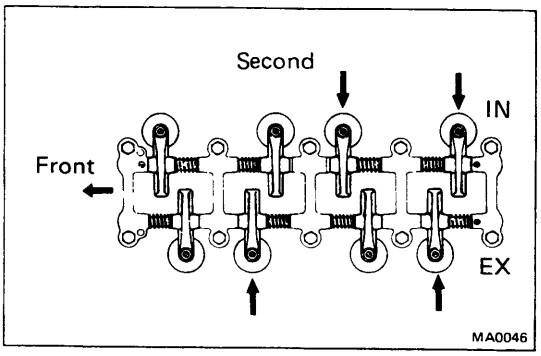

(e) Turn the crankshaft one complete revolution (360°) and align timing marks in the manner mentioned above. Adjust only the valves indicated by arrows.

(f) Reinstall the valve cover.

(g) Reinstall the air cleaner (22R engine).

14. ADJUST IDLE SPEED

A. 22R-E ENGINE

(a) Preparation

- Air cleaner installed
- All pipes and hoses of air intake system connected
- All vacuum lines connected (i. e., SC, EGR systems, etc.)
- EFI system wiring connectors fully plugged
- Engine at normal operating temperature
- Accessories switched off
- Transmission in N range

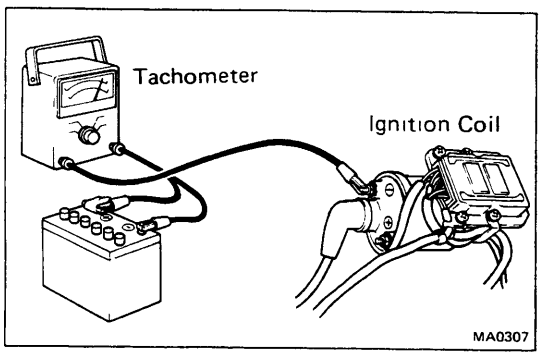

(b) Connect a tachometer to the engine.

Connect the tachometer positive (+) terminal to the ignition coil negative (−) terminal.

CAUTION:

1. **NEVER allow the tachometer terminal to touch ground as it could result in damage to the igniter and/or ig· tion coil.**
2. **As some tachometers are not compatible with this ignition system, it is recommended that you consult with the manufacturer.**

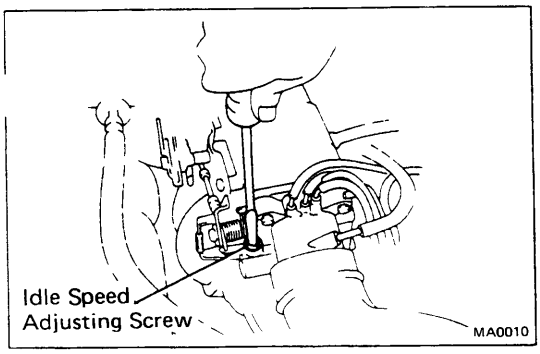

(c) Race the engine at 2,500 rpm for about 2 minutes.

(d) Set the idle speed by turning the IDLE SPEED ADJUSTING SCREW.

Idle speed: 750 rpm

(e) Remove the tachometer.

B. 22R ENGINE

(a) Preparation

- Air cleaner installed
- Choke valve fully open
- Accessories switched off
- All vacuum lines connected (i.e., AS, EGR systems, etc.)
- Transmission in N range
- Engine idling at normal operating temperature

(b) Connect a tachometer to the engine.
Remove the rubber cap and connect the tachometer positive (+) terminal to the service connector at the igniter.

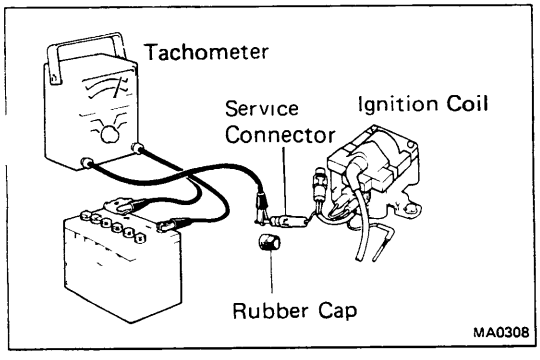

CAUTION:

1. **NEVER allow the tachometer terminal to touch ground as it could result in damage to the igniter and/or ignition coil.**
2. **As some tachometers are not compatible with this ignition system, it is recommended that you consult with the manufacturer.**

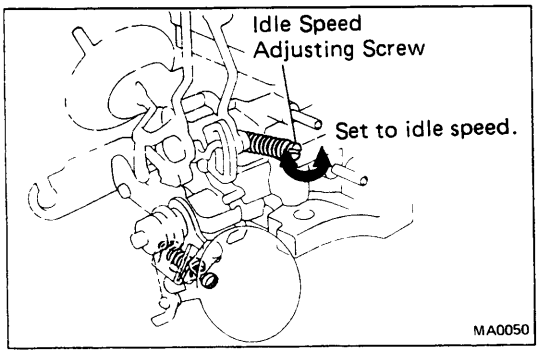

(c) Set the idle speed by turning the IDLE SPEED ADJUSTING SCREW.

Idle speed: 700 rpm M/T
750 rpm A/T

NOTE: Leave the tachometer connected for further adjustment.

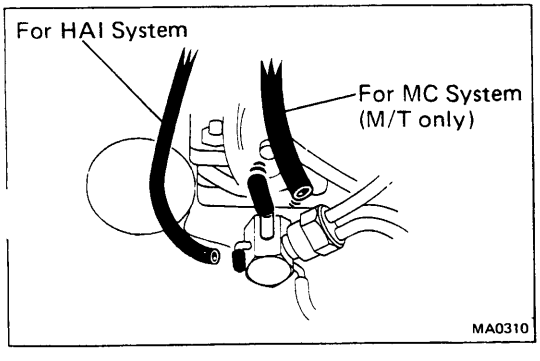

15. 22R ENGINE ONLY:
ADJUST FAST IDLE SPEED

(a) Stop the engine and remove the air cleaner.

(b) Plug the hose connections for HAI system and MC system (w/M/T only) to prevent rough idling.

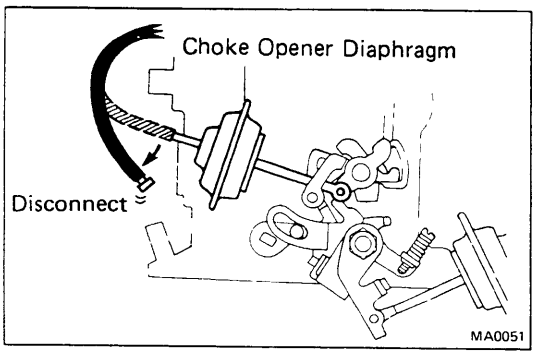

(c) Disconnect the hose from the choke opener diaphragm and plug the hose end.
This will shut off the choke opener system.

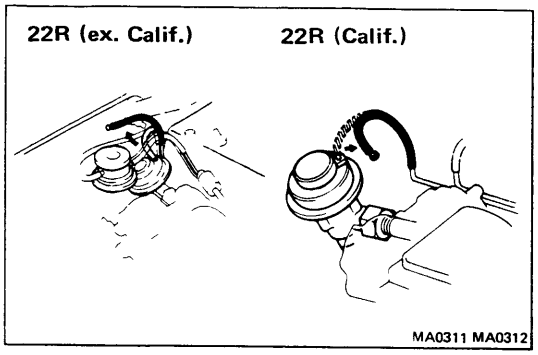

(d) Disconnect the hose from the EGR valve.
This will shut off the EGR system.

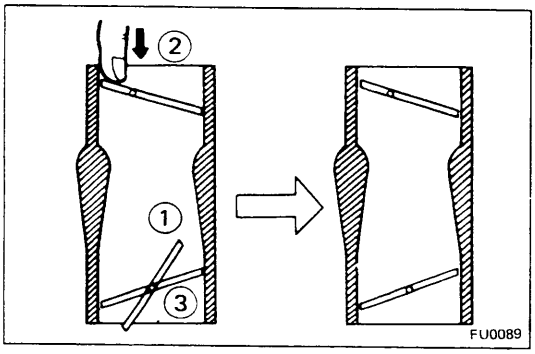

(e) Set the fast idle cam.
While holding the throttle valve slightly open, push the choke valve closed, and hold it closed as you release the throttle valve.

(f) Start the engine, but do NOT touch the accelerator pedal.

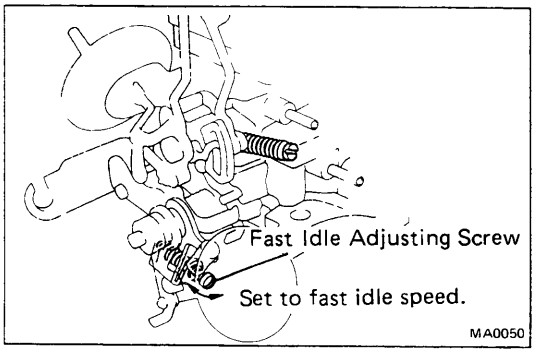

(g) Set the fast idle speed by turning the fast idle adjusting screw.

Fast idle speed: 2,600 rpm

(h) Reconnect the vacuum hoses to the proper locations.

(i) Reinstall the air cleaner.

(j) Stop the engine and remove the tachometer.

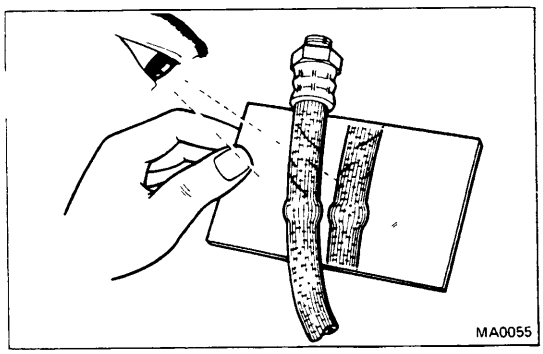
MA0055

BRAKES

16. INSPECT BRAKE LINE PIPES AND HOSES

NOTE: Inspect in a well lighted area. Inspect the entire circumference and length of the brake hoses using a mirror as required. Turn the front wheels fully right or left before inspecting the front brake.

(a) Check all brake lines and hoses for:

- Damage
- Wear
- Deformation
- Cracks
- Corrosion
- Leaks
- Bends
- Twists

(b) Check all clamps for tightness and connections for leakage.

(c) Check that the hoses and lines are clear of sharp edges, moving parts and the exhaust system.

(d) Check that the lines installed in grommets pass through the center of the grommets.

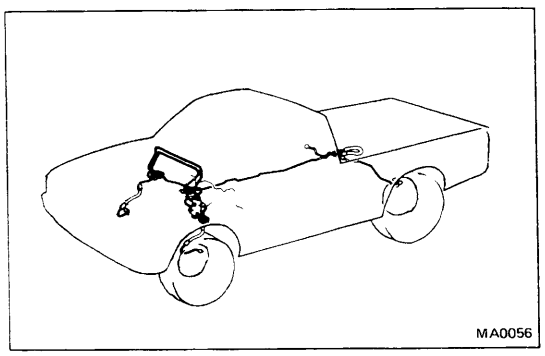
MA0056

17. INSPECT REAR BRAKE LININGS AND DRUMS (2WD: See page BR-30 or BR-37, 4WD: See page BR-43)

(a) Check the linings for wear.

Minimum lining thickness: 1.0 mm (0.039 in.)

(b) Check the brake drums for scoring or wear.

Maximum drum inside diameter: 256.0 mm (10.079 in.)

(c) Clean the brake parts with a damp cloth.

NOTE: Do not use compressed air to clean the brake parts.

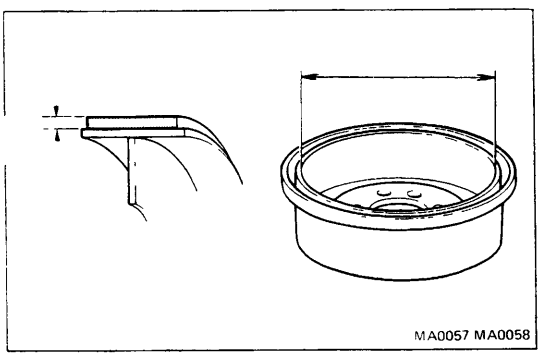
MA0057 MA0058

18. INSPECT FRONT BRAKE PADS AND DISCS (2WD: See page BR-13 or BR-19, 4WD: See page BR-25)

(a) Check the thickness of the disc brake pads and check for irregular wear.

Minimum pad thickness: 1.0 mm (0.039 in.)

(b) Check the disc for wear or runout.

Minimum disc thickness:

RN 2WD	1/2 ton	21.0 mm (0.827 in.)
	1 ton and C&C	24.0 mm (0.945 in.)
RN 4WD		11.5 mm (0.453 in.)

Maximum disc runout: 0.15 mm (0.0059 in.)

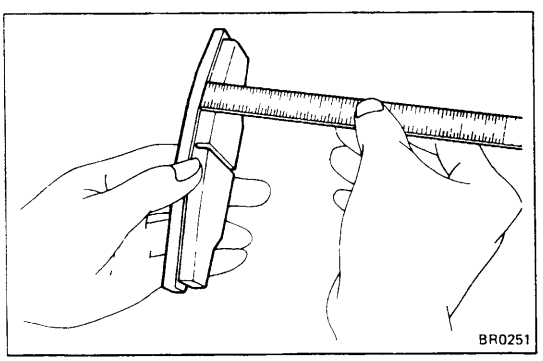
BR0251

CHASSIS

19. INSPECT STEERING LINKAGE

(a) Check that the steering wheel freeplay is:

Maximum: 30 mm (1.18 in.)

With the vehicle stopped and pointed straight ahead, rock the steering wheel gently back and forth with light finger pressure.

If incorrect, adjust or repair.

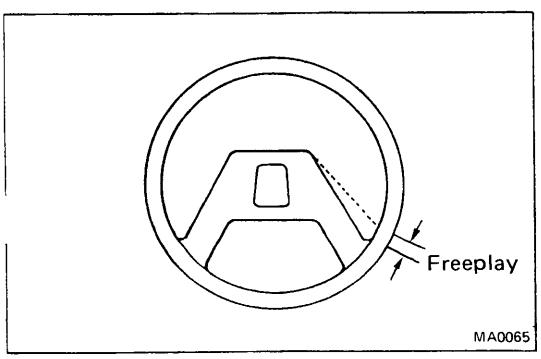

MA0065

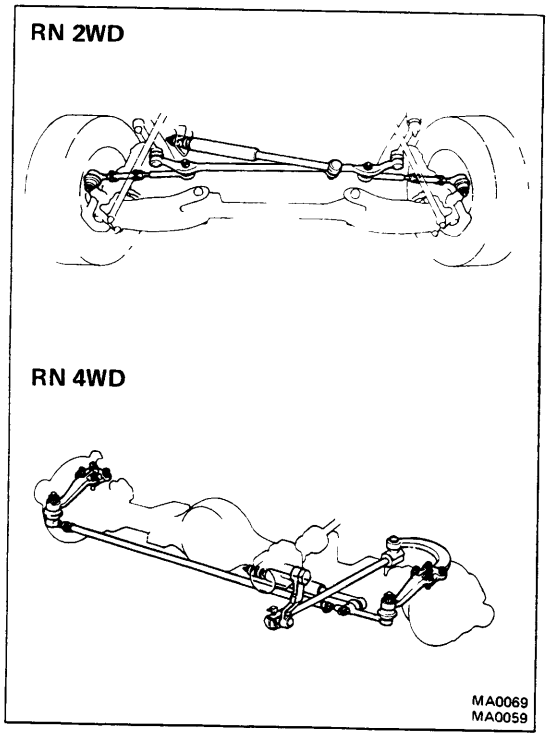

(b) Check the steering linkage for looseness or damage. Check that:

- Tie rod ends and relay rod ends do not have excessive play.
- Dust seals are not damaged.

20. INSPECT STEERING GEAR BOX OIL

Check the steering gear box for oil leaks.
If leakage is found, check for cause and repair.

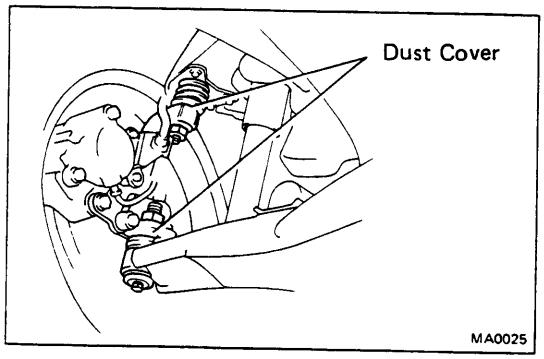

21. RN 2WD ONLY:
INSPECT BALL JOINTS AND DUST COVERS

(a) Inspect the ball joints for excessive looseness. (See page FA-13)

(b) Inspect the dust cover for damage.

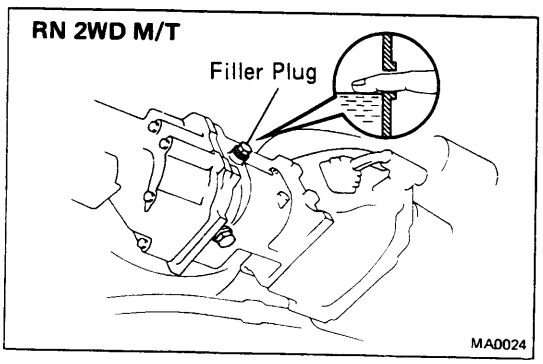

22. CHECK OIL LEVEL IN MANUAL TRANSMISSION, TRANSFER (RN 4WD ONLY) AND DIFFERENTIAL

Remove the filler plug and feel inside the hole with your finger. Check that the oil comes to within 5 mm (0.20 in.) of the bottom edge of the hole. If the level is low, add oil until it begins to run out of the filler hole.

Transmission oil —
Oil grade: API GL-4 or GL-5
Viscosity: SAE 75W-90

Transfer oil —
Oil grade: API GL-4 or GL-5
Viscosity: SAE 75W-90

Differential oil —
Oil grade: API GL-5 hypoid gear oil

Viscosity:	**Above −18°C (0°F)**	**SAE 90**
	Below −18°C (0°F)	**SAE 80W-90 or 80W**

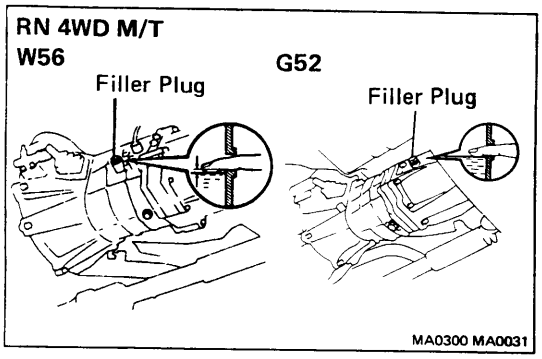

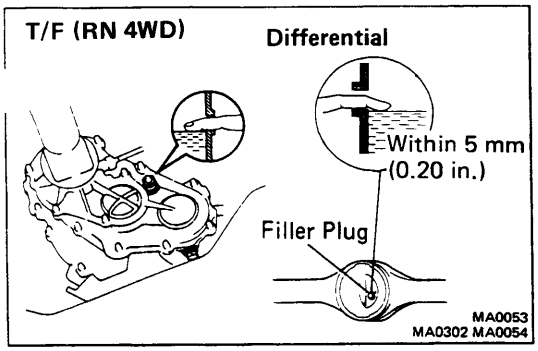

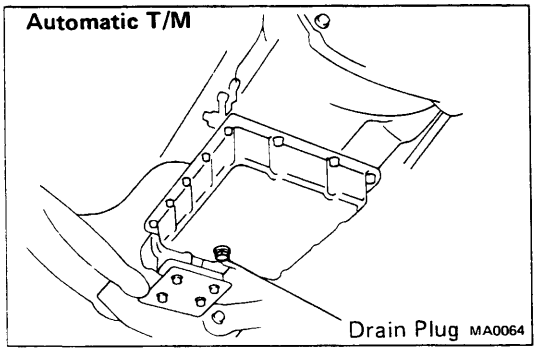

23. CHECK AUTOMATIC TRANSMISSION OIL

Check the automatic transmission for oil leakage.
If leakage is found, check for cause and repair.

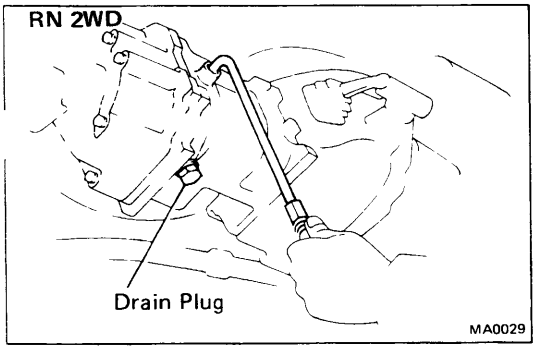

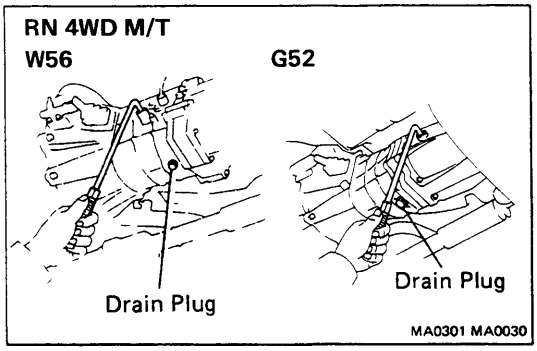

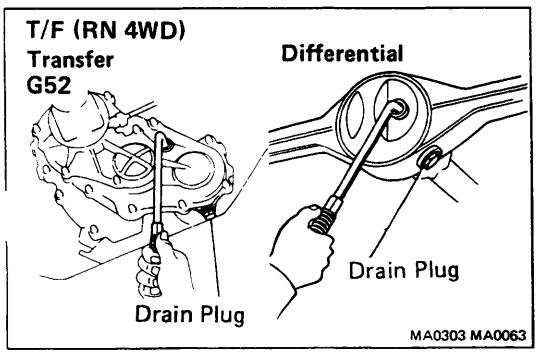

24. REPLACE MANUAL TRANSMISSION, TRANSFER (RN 4WD) AND DIFFERENTIAL OIL

(a) Remove the drain plug and drain the oil.

(b) Reinstall the drain plug.

(c) Add new oil until it begins to run out of the filler hole.

Oil grade and viscosity: See page MA-12

Oil capacity:

Transmission —

RN 2WD

W46, 55, 56

2.4 liters (2.5 US qts, 2.1 Imp. qts)

RN 4WD

G52 3.9 liters (4.1 US qts, 3.4 Imp. qts)

W56 3.0 liters (3.2 US qts, 2.6 Imp. qts)

Transfer — 1.6 liters (1.7 US qts, 1.4 Imp. qts)

Differential —

RN 2WD

7.5 in. 1.7 liters (1.8 US qts, 1.5 Imp. qts)

8.0 in. 1.8 liters (1.9 US qts, 1.6 Imp. qts)

RN 4WD

Front 2.3 liters (2.4 US qts, 2.0 Imp. qts)

Rear 2.2 liters (2.3 US qts, 1.9 Imp. qts)

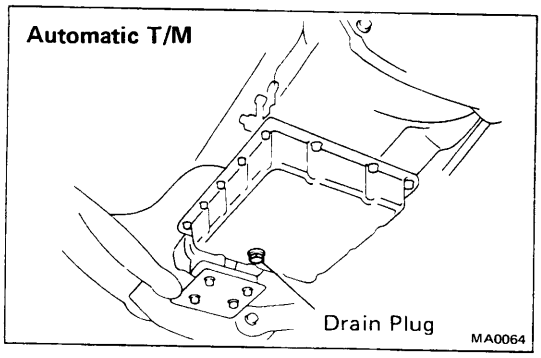

25. **RN 2WD ONLY:**
REPLACE AUTOMATIC TRANSMISSION FLUID

(a) Remove the drain plug and drain the fluid.

(b) Reinstall the drain plug securely.

(c) With the engine OFF, add new fluid through the dipstick tube.

Fluid: ATF DEXRON® II

Drain and refill capacity:
2.4 liters (2.5 US qts, 2.1 Imp. qts)

Dry fill capacity:
6.5 liters (6.9 US qts, 5.7 Imp. qts)

(d) Start the engine and shift the selector into all positions from P through L and then shift into P.

(e) With the engine idling, check the fluid level. Add fluid up to the cool level on the dipstick.

CAUTION: Do not overfill.

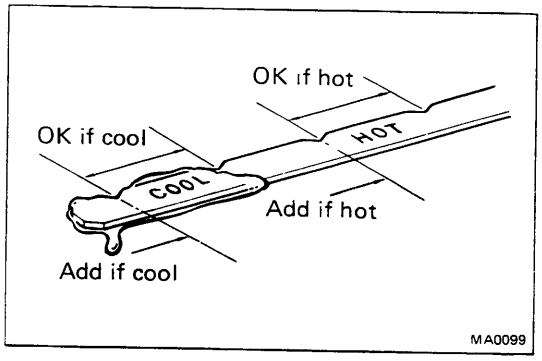

RN 2WD
SEE PAGE FA-7 to 9

26. **REPACK FRONT WHEEL BEARINGS**

Change the front wheel bearing grease.
RN 2WD — (See page FA-7 to 19)
RN 4WD — (See page FA-44 to 47)

RN 2WD —
Grease grade: Lithium base multipurpose grease (NLGI No.2)
Wheel bearing friction preload (at starting):
0.6 — 1.8 kg (1.3 — 4.0 lb, 5.9 — 17.7 N)

RN 4WD —
Grease grade: Lithium base multipurpose grease (NLGI No.2)
Wheel bearing friction preload (at starting):
2.8 — 5.6 kg (6.2 — 12.3 lb, 27 — 55 N)

RN 4WD
SEE PAGE FA-44 to 47

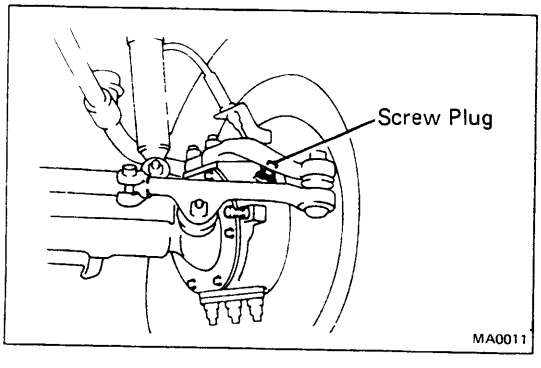

27. **RN 4WD ONLY:**
LUBE STEERING KNUCKLE AND CHASSIS (Including propeller shaft)

(a) Remove the screw plug from each steering knuckle and repack with lubricant.

Steering knuckle grease: Molybdenum disulphide lithiur base grease (NLGI No.2)

(b) Reinstall the two screw plugs.

(c) Lubricate chassis components, referring to the lubrication chart. Before pumping in grease, wipe off any mud and dust on the grease fitting.

Grease grade:

Propeller shaft (except Double-Cardan joint) — Lithium base chassis lubricant (NLGI No.2)

Double-Cardan joint — Molybdenum disulphide lithium base chassis lubricant (NLGI No.2)

Drag link ends — Lithium base chassis lubricant (NLGI No.1)

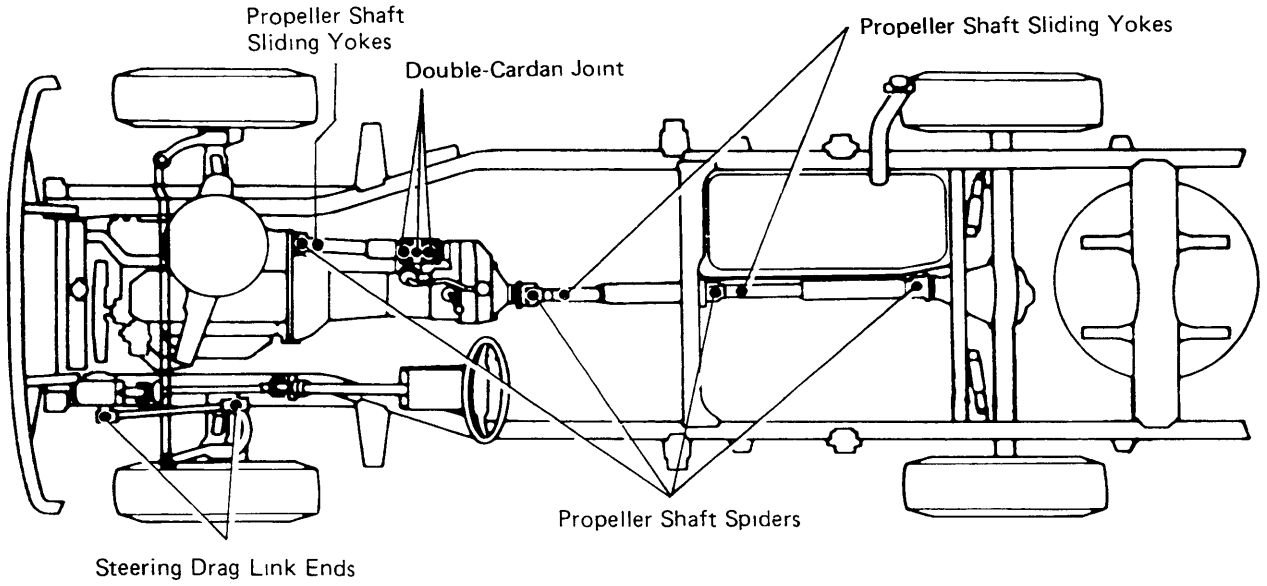

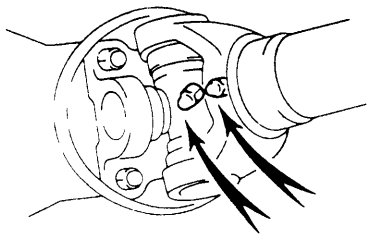

Spider

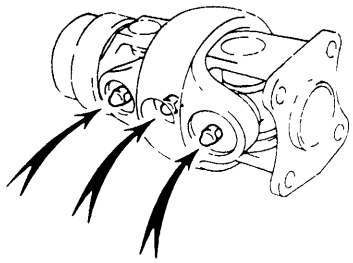

Double-Cardan Joint

MA0070
MA0071 MA0072

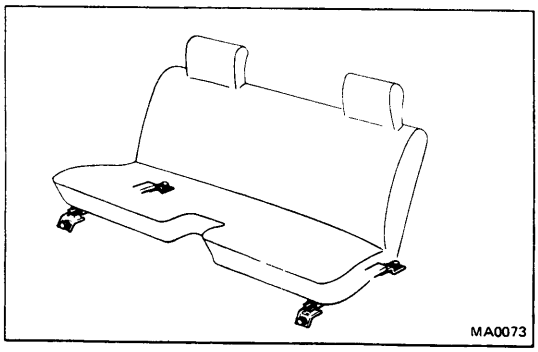
MA0073

28. TIGHTEN BOLTS AND NUTS ON CHASSIS AND BODY

Tighten the following parts:

- Seat mounting bolts

Torque: 375 kg-cm (27 ft-lb, 37 N·m)

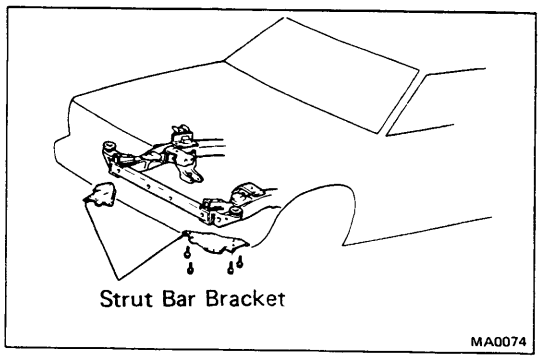
Strut Bar Bracket
MA0074

- Strut bar bracket-to-frame mounting bolts (RN 2WD)

Torque: 530 kg-cm (38 ft-lb, 52 N·m)

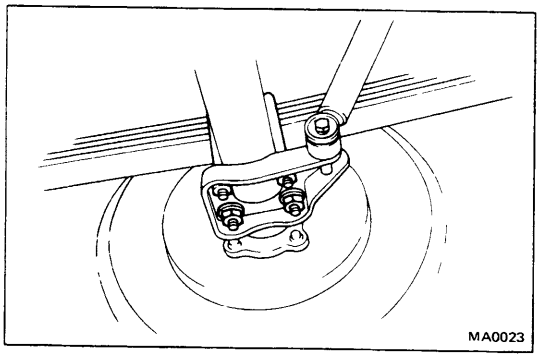
MA0023

- Leaf spring U-bolt mounting nuts

Torque:
RN 2WD 1,000 kg-cm (72 ft-lb, 98 N·m)
RN 4WD 1,250 kg-cm (90 ft-lb, 123 N·m)

Under Severe Condition:

In addition to the above maintenance items, check for loose or missing bolts and nuts on the following:

- Steering system
- Drive train
- Suspension system
- Fuel tank mounts
- Engine mounts, etc.

29. FINAL INSPECTION

(a) Check operation of body parts:

- Hood
  Auxiliary catch operates properly
  Hood locks securely when closed
- Doors
  Door locks operate properly
  Doors close properly
- Seats
  Seats adjust easily and lock securely in any positions
  Seat backs lock securely at any angle
  Fold-down seat backs lock securely

(b) Road test

- Engine and chassis parts do not have abnormal noises.
- Vehicle does not wander or pull to one side.
- Brakes work properly and do not drag.

(c) Be sure to deliver a clean vehicle and especially check:

- Steering wheel
- Shift lever knob
- All switch knobs
- Door handles
- Seats

GENERAL MAINTENANCE

These are maintenance and inspections items which are considered to be the owner's responsibility. They can be performed by the owner or he can have them done at a service shop. These items include those which should be checked on a daily basis, those which, in most cases, do not require (special) tools and those which are considered to be reasonable for the owner to perform.
Items and procedures for general maintenance are as follows.

OUTSIDE VEHICLE

1. TIRES

(a) Check the pressure with a gauge. If necessary, adjust.

(b) Check for cuts, damage or excessive wear.

2. WHEEL NUTS

When checking the tires, check the nuts for looseness or for missing nuts. If necessary, tighten them.

3. TIRE ROTATION

It is recommended that the tires be rotated every 7,500 miles (12,000 km).

4. WINDSHIELD WIPER BLADES

Check for wear or cracks whenever they do not wipe clean. If necessary replace.

5. FLUID LEAKS

(a) Check underneath for leaking fuel, oil, water or other fluid.

(b) If you smell gasoline fumes or notice any leak, have the cause found and corrected.

6. DOORS AND ENGINE HOOD

(a) Check that all doors and the tailgate operate smoothly, and that all latches lock securely.

(b) Check that the engine hood secondary latch secures the hood from opening when the primary latch is released.

INSIDE VEHICLE

7. LIGHTS

(a) Check that the headlights, stop lights, taillights, turn signal lights, and other lights are all working.

(b) Check the headlight aim.

8. WARNING LIGHTS AND BUZZERS

Check that all warning lights and buzzers function properly.

9. HORN

Check that it is working.

10. WINDSHIELD GLASS

Check for scratches, pits or abrasions.

11. WINDSHIELD WIPER AND WASHER

(a) Check operation of the wipers and washer.

(b) Check that the wipers do not streak.

12. WINDSHIELD DEFROSTER

Check that air comes out from the defroster outlet when operating the heater or air conditioner.

13. REAR VIEW MIRROR

Check that it is mounted securely.

14. SUN VISORS

Check that they move freely and are mour ed securely.

15. STEERING WHEEL

Check that it has specified freeplay. Be alert for changes in steering condition, such as hard steering, excessive freeplay or strange noise.

16. SEATS

(a) Check that the seat adjusters operate smoothly.

(b) Check that all latches lock securely in any position.

(c) Check that the head restraints move up and down smoothly and that the locks hold securely in any latched position.

(d) For fold-down seat backs, check that the latches lock securely.

17. SEAT BELTS

(a) Check that the seat belt system such as the buckles, retractors and anchors operate properly and smoothly.

(b) Check that the belt webbing is not cut, frayed, worn or damaged.

18. ACCELERATOR PEDAL

Check the pedal for smooth operation and uneven pedal effort or catching.

19. CLUTCH PEDAL (See page CL-3)

Check the pedal for smooth operation.

Check that the pedal has the proper freeplay.

20. BRAKE PEDAL (See page BR-5)

(a) Check the pedal for smooth operation.

(b) Check that the pedal has the proper reserve distance and freeplay.

(c) Check the brake booster function.

21. BRAKES

At a safe place, check that the brakes do not pull to one side when applied.

22. PARKING BRAKE (See page BR-7)

(a) Check that the lever has the proper travel.

(b) On a safe incline, check that vehicle is held securely with only the parking brake applied.

23. AUTOMATIC TRANSMISSION "PARK" MECHANISM

(a) Check the lock release button of the selector lever for proper and smooth operation.

(b) On a safe incline, check that vehicle is held securely with the selector lever in "P" position and all brakes released.

UNDER HOOD

24. WINDSHIELD WASHER FLUID

Check that there is sufficient fluid in the tank.

25. ENGINE COOLANT LEVEL

Check that the coolant level is between the "FULL" and "LOW" lines on the see-through reservoir.

26. RADIATOR AND HOSES

(a) Check that the front of the radiator is clean and not blocked with leaves, dirt or bugs.

(b) Check the hoses for cracks, kinks, rot or loose connections.

27. BATTERY ELECTROLYTE LEVEL

Check that the electrolyte level of all battery cells is between the upper and lower level lines on the case. If level is low, add distilled water only.

28. BRAKE AND CLUTCH FLUID LEVELS

(a) Check that the brake fluid level is near the upper level line on the see-through reservoir.

(b) Check that the clutch fluid level is up to the top of the narrow neck of the see-through reservoir.

29. ENGINE DRIVE BELTS

Check all drive belts for fraying, cracks, wear or oiliness.

30. ENGINE OIL LEVEL

Check the level on the dipstick with the engine turned off.

31. POWER STEERING FLUID LEVEL

Check the level on the dipstick.
The level should be in the "HOT" or "COLD" range depending on the fluid temperature.

32. AUTOMATIC TRANSMISSION FLUID LEVEL

(a) Park the vehicle on a level surface.

(b) With the engine idling and the parking brake applied, shift the selector into all positions from P to L, and then shift into P.

(c) Pull out the dipstick and wipe off the fluid with a clean rag. Re-insert the dipstick and check that the fluid level is in the HOT range.

(d) Perform this check with the fluid at normal driving temperature (70 — 80°C or 158 — 176°F).

NOTE: Wait until the engine cools down (about 30 min.) before checking the fluid level after extended high speed driving in hot weather, driving in heavy traffic or pulling a trailer.

33. EXHAUST SYSTEM

Visually inspect for cracks, holes or loose supports.
If any change in the sound of the exhaust or smell of the exhaust fumes is noticed, have the cause located and corrected.

ENGINE MECHANICAL

	Page
TROUBLESHOOTING (22R-E)	EM-2
(22R)	EM-5
ENGINE TUNE-UP	EM-9
IDLE HC/CO CONCENTRATION CHECK METHOD	EM-10
COMPRESSION CHECK	EM-11
CYLINDER HEAD	EM-12
TIMING CHAIN	EM-40
CYLINDER BLOCK	EM-47

TROUBLESHOOTING (22R-E)

ENGINE OVERHEATING

Problem	Possible cause	Remedy	Page
Engine overheats	Cooling system faulty	Troubleshoot cooling system	CO-2
	Incorrect ignition timing	Reset timing	IG-10

HARD STARTING

Problem	Possible cause	Remedy	Page
Engine will not crank or cranks slowly	Starting system faulty	Troubleshoot starting system	ST-2
Engine will not start/ Hard to start (cranks OK)	No fuel supply to injector	Troubleshoot EFI system	FI-9
	• No fuel in tank		
	• Fuel pump not working		
	• Fuel filter clogged		
	• Fuel line clogged or leaking		
	EFI system problems	Repair as necessary	
	Ignition problems	Perform spark test	
	• Ignition coil	Inspect coil	IG-5,7
	• Igniter	Inspect igniter	IG-6,8
	• Distributor	Inspect distributor	IG-9
	Spark plugs faulty	Inspect plugs	IG-4
	High tension wires disconnected or broken	Inspect wires	IG-4
	Vacuum leaks	Repair as necessary	
	• PCV hoses		
	• EGR valve		
	• Intake manifold		
	• Air intake chamber		
	• Throttle body		
	Pulling in air between air flow meter and throttle body	Repair as necessary	
	Compression low	Check compression	EM-11

ROUGH IDLING

Problem	Possible cause	Remedy	Page
Rough idle, stalls or misses	Spark plugs faulty	Inspect plugs	IG-4
	High tension wires faulty	Inspect wires	IG-4
	Ignition problems		
	• Ignition coil	Inspect coil	IG-5,7
	• Igniter	Inspect igniter	IG-6,8
	• Distributor	Inspect distributor	IG-9,10
	Incorrect ignition timing	Reset timing	IG-10
	Vacuum leaks	Repair as necessary	
	• PCV hoses		
	• EGR valve		
	• Intake manifold		
	• Air intake chamber		
	• Throttle body		
	Pulling in air between air flow meter and throttle body	Repair as necessary	
	Incorrect idle speed	Adjust idle	MA-8
	EFI system problems	Repair as necessary	

ROUGH IDLING (CONT'D)

Problem	Possible cause	Remedy	Page
Rough idle, stalls or misses (cont'd)	Engine overheats	Check cooling system	CO-2
	Compression low	Check compression	EM-11
	Incorrect valve clearance	Adjust valve clearance	MA-7

ENGINE HESITATES/POOR ACCELERATION

Problem	Possible cause	Remedy	Page
Engine hesitates/ Poor acceleration	Spark plugs faulty	Inspect plugs	IG-4
	High tension wires faulty	Inspect wires	IG-4
	Vacuum leaks • PCV hoses • EGR valve • Intake manifold • Air intake chamber • Throttle body	Repair as necessary	
	Pulling in air between air flow meter and throttle body	Repair as necessary	
	Incorrect ignition timing	Reset timing	IG-10
	Fuel system clogged	Check fuel system	
	Air cleaner clogged	Check air cleaner	
	EFI system problems	Repair as necessary	
	Emission control system problem (cold engine) • EGR system always on	Check EGR system	
	Engine overheats	Check cooling system	CO-2
	Compression low	Check compression	EM-11

ENGINE DIESELING

Problem	Possible cause	Remedy	Page
Engine dieseling (run after ignition switch is turned off)	EFI system problems	Repair as necessary	

AFTER FIRE, BACKFIRE

Problem	Possible cause	Remedy	Page
Muffler explosion (after fire) on deceleration only	Deceleration fuel cut system always off	Check EFI (fuel cut) system	FI-74
Muffler explosion (after fire) all the time	Air cleaner clogged	Check air cleaner	
	EFI system problem	Repair as necessary	
	Incorrect ignition timing	Reset timing	IG-10
	Incorrect valve clearance	Adjust valve clearance	MA-7

AFTER FIRE, BACKFIRE (CONT'D)

Problem	Possible cause	Remedy	Page
Engine backfires	EFI system problem	Repair as necessary	
	Vacuum leak • PCV hoses • EGR valve • Intake manifold • Air intake chamber • Throttle body	Check hoses and repair as necessary	
	Pulling in air between air flow meter and throttle body	Repair as necessary	
	Insufficient fuel flow	Troubleshoot fuel system	FI-9
	Incorrect ignition timing	Reset timing	IG-10
	Incorrect valve clearance	Adjust valve clearance	MA-7
	Carbon deposits in combustion chambers	Inspect cylinder head	EM-18

EXCESSIVE OIL CONSUMPTION

Problem	Possible cause	Remedy	Page
Excessive oil consumption	Oil leak	Repair as necessary	
	PCV line clogged	Check PCV system	
	Piston ring worn or damaged	Check rings	EM-57
	Valve stem and guide worn	Check valves	EM-19
	Valve stem seal worn	Check seals	

POOR GASOLINE MILEAGE

Problem	Possible cause	Remedy	Page
Poor gasoline mileage	Fuel leak	Repair as necessary	
	Air cleaner clogged	Check air cleaner	MA-5
	Incorrect ignition timing	Reset timing	IG-10
	EFI system problems • Injector faulty • Deceleration fuel cut system faulty	Repair as necessary	
	Spark plugs faulty	Inspect plugs	IG-4
	EGR system always on	Check EGR system	
	Compression low	Check compression	EM-11
	Tires improperly inflated	Inflate tires to proper pressure	FA-3
	Clutch slips	Troubleshoot clutch	CL-2
	Brakes drag	Troubleshoot brakes	BR-2
Unpleasant odor	Incorrect idle speed	Adjust idle	MA-8
	Incorrect ignition timing	Reset timing	IG-10
	Vacuum leaks • PCV hoses • EGR valve • Intake manifold • Air intake chamber • Throttle body	Repair as necessary	
	EFI system problems	Repair as necessary	

TROUBLESHOOTING (22R)

ENGINE OVERHEATING

Problem	Possible cause	Remedy	Page
Engine overheats	Cooling system faulty Incorrect ignition timing	Troubleshoot cooling system Reset timing	CO-2 IG-10

HARD STARTING

Problem	Possible cause	Remedy	Page
Engine will not crank or cranks slowly	Starting system faulty	Troubleshoot starting system	ST-2
Engine will not start/ Hard to start (cranks OK)	No fuel supply to carburetor	Troubleshoot fuel system	FU-2
	Carburetor problems • Choke operating • Flooding • Needle valve sticking or clogged • Vacuum hose disconnected or damaged • Fuel cut solenoid valve not open • Secondary throttle valve not close	Repair as necessary	FU-4
	Ignition problems • Ignition coil • Igniter • Distributor	Perform spark test Inspect coil Inspect igniter Inspect distributor	IG-4 IG-5,7 IG-6,8 IG-9,10
	Spark plugs faulty	Inspect plugs	IG-4
	Ignition wiring disconnected or broken	Inspect wiring	IG-4
	Vacuum leaks • PCV line • EGR line • MC line • Intake manifold • CMH	Repair as necessary	
	Compression low	Chek compression	EM-11

ROUGH IDLING

Problem	Possible cause	Remedy	Page
Rough idle or stalls	Spark plugs faulty	Inspect plugs	IG-4
	Ignition wiring faulty	Inspect wiring	IG-4
	Vacuum leaks • PCV line • MC line • EGR line • Intake manifold • HAC line • CMH	Repair as necessary	
	Incorrect ignition timing	Reset timing	IG-10
	Ignition problems • Ignition coil • Igniter • Distributor	Perform spark test Inspect coil Inspect igniter Inspect distributor	IG-4 IG-5,7 IG-6,8 IG-9,10

ROUGH IDLING (CONT'D)

Problem	Possible cause	Remedy	Page
Rough idle or stalls	Carburetor problems • Idle speed incorrect • Slow jet clogged • Idle mixture incorrect • Fuel cut solenoid valve not open • Fast idle speed setting incorrect (cold engine) • Choke system faulty	Perform on-vehicle inspection of carburetor	FU-3
	HAI system faulty	Check compression	EC-53
	Engine overheats	Troubleshoot cooling system	CO-2
	EGR valve faulty	Check EGR valve	EC-30
	MC valve faulty	Check MC valve	EC-26
	Incorrect valve clearance	Adjust valve clearance	MA-7
	Compression low	Check compression	EM-11

ENGINE HESITATES/POOR ACCELERATION

Problem	Possible cause	Remedy	Page
Engine hesitates/ Poor acceleration	Spark plugs faulty	Inspect plugs	IG-4
	Ignition wiring faulty	Inspect wiring	IG-4
	Vacuum leaks • PCV line • EGR line • HAC line • Intake manifold • CMH • MC	Repair as necessary	
	Incorrect ignition timing	Reset timing	IG-10
	Air filter clogged	Check air filter	MA-5
	Fuel line clogged	Check fuel line	
	Carburetor problems • Float level too low • Accelerator pump faulty • Power valve faulty • Choke valve closed (hot engine) • Choke system • Secondary throttle stopper operation faulty (cold engine)	Repair as necessary	FU-4
	CMH system faulty (cold engine)		
	Emission control system problem • HAI system always on (hot engine)	Check HAI system	EC-53
	• AAP system faulty	Check AAP system	EC-61
	• EGR system always on (cold engine)	Check EGR system	EC-30
	• HAC system faulty	Check HAC system	EC-48
	Engine overheats	Check cooling system	CO-2
	Compression low	Check compression	EM-11

ENGINE DIESELING

Problem	Possible cause	Remedy	Page
Engine dieseling (runs after ignition switch is turned off)	Carburetor problems • Linkage sticking • Idle speed or fast idle speed out of adjustment • Fuel cut solenoid faulty	Repair as necessary	FU-4
	Incorrect ignition timing	Reset timing	IG-10
	EGR system faulty	Check EGR system	EC-30

AFTER FIRE, BACKFIRE

Problem	Possible cause	Remedy	Page
Muffler explosion (after fire) on deceleration only	AS system faulty	Check AS system	EC-43
	MC system faulty	Check MC system	EC-26
	Deceleration fuel cut system always off	Check fuel cut system	EC-63
Muffler explosion (after fire) all the time	Air filter clogged	Check air filter	MA-5
	Choke system faulty	Check choke	EC-55
	Incorrect ignition timing	Reset timing	IG-10
	Incorrect valve clearance	Adjust valves clearance	MA-7
Engine backfires	Choke valve open (cold engine)	Check choke system	EC-55
	Carburetor vacuum leak	Check hoses and repair as necessary	
	Insufficient fuel flow	Troubleshoot fuel system	FU-2
	Incorrect ignition timing	Reset timing	IG-10
	Incorrect valve clearance	Adjust valve clearance	MA-7
	Carbon deposits in combustion chambers	Inspect cylinder head	EM-18

EXCESSIVE OIL CONSUMPTION

Problem	Possible cause	Remedy	Page
Excessive oil consumption	Oil leak	Repair as necessary	
	PCV line clogged	Check PCV system	EC-19
	Piston ring worn or damaged	Check rings	EM-57
	Valve stem and guide worn	Check valves and guides	EM-19
	Valve stem oil seal worn or damaged	Check oil seal	

POOR FUEL MILEAGE

Problem	Possible cause	Remedy	Page
Poor fuel mileage	Fuel leak	Repair as necessary	
	Air filter clogged	Check air filter	MA-5
	Incorrect ignition timing	Reset timing	IG-10
	Carburetor problems • Choke system faulty • Idle speed too high • Deceleration fuel cut system faulty • Power valve always open	Perform on-vehicle inspection of carburetor	FU-4
	Spark plugs faulty Inspect plugs	Inspect plugs	IG-4
	EGR system always on	Check EGR system	EC-30
	Compression low	Check compression	EM-11
	Tires improperly inflated	Inflate tires to proper pressure	FA-3
	Clutch slips	Troubleshoot clutch	CL-2
	Brakes drag	Troubleshoot brakes	BR-2

ENGINE TUNE-UP

1. INSPECT ENGINE OIL LEVEL

2. INSPECT AIR CLEANER (See page MA-5)

3. INSPECT SPARK PLUGS (See page IG-4)

4. INSPECT VALVE CLEARANCE (See page MA-7)

   Valve clearance: Intake 0.20 mm (0.008 in.)
   Exhaust 0.30 mm (0.012 in.)

5. INSPECT IGNITION TIMING (See step 3 on page IG-10)

   Ignition timing:
   22R 0° TDC @ Max. 950 rpm
   (w/vacuum advancer OFF)
   22R-E 5° BTDC (w/short terminal "T")

6. INSPECT CARBURETOR FLOAT LEVEL
   (with Carburetor)
   (See step 3 on page FU-3)

7. INSPECT FAST IDLE SPEED
   (with Carburetor)
   (See step 15 on page MA-9)

8. ADJUST IDLE SPEED (See page MA-8)

   Idle speed: with EFI
   750 rpm
   with carburetor
   700 rpm for M/T
   750 rpm for A/T

   NOTE: Adjust idle mixture as necessary.

IDLE HC/CO CONCENTRATION CHECK METHOD

NOTE: This check method is used only to determine whether or not the idle HC/CO complies with regulations.

PRECHECK

INITIAL CONDITIONS

(a) Normal engine operating temperature
(b) Choke fully open (with carburetor)
(c) Air cleaner installed
(d) All pipe and hoses of air intake system connected (with EFI)
(e) All accessories switched off
(f) All vacuum lines properly connected
(g) EFI system wiring connectors fully plugged.
(h) Idle speed set correctly
(i) Carburetor fuel level about even with correct level in the sight glass
(j) Tachometer and HC/CO meter calibrated and at hand

MEASUREMENT

1. **INSERT TESTING PROBE OF HC/CO METER INTO TAILPIPE AT LEAST 40 cm (1.3 ft)**

2. **MEASURE HC/CO CONCENTRATION AT IDLE**

Wait at least one minute before measuring to allow the concentration to stabilize.

Complete the measuring within three minutes.

If the HC/CO concentration does not conform to regulation, see the table below for possible causes.

TROUBLESHOOTING

HC	CO	Problems	Causes
High	Normal	Rough idle	1. Faulty ignition: • Incorrect timing • Fouled, shorted or improperly gapped plugs • Open or crossed ignition wires • Cracked distributor cap 2. Incorrect valve clearance 3. Leaky EGR valve 4. Leaky exhaust valves 5. Leaky cylinder
High	Low	Rough idle Fluctuating HC reading	1. Vacuum leak: • Vacuum hose • Intake manifold • Air chamber (with EFI) • PCV line • Carburetor base (with carburetor) • Throttle body (with EFI) • CMH (with carburetor) 2. Leaky MC valve (with carburetor)
High	High	Rough idle Black smoke from exhaust	1. Restricted air filter 2. Plugged PCV valve 3. AS system problem (with carburetor) 4. Faulty carburetion: (with carburetor) • Faulty choke action • Incorrect float setting • Leaking needle or seat • Leaking power valve 5. Faulty EFI system: (with EFI) • Faulty pressure regulator • Clogged fuel return line • Faulty air flow meter • Defective water thermo sensor • Defective air thermo sensor • Faulty EFI computer • Faulty injector • Faulty cold start injector

COMPRESSION CHECK

NOTE: If there is lack of power, excessive oil consumption or poor fuel mileage, measure the cylinder compression pressure.

1. **WARM UP ENGINE**

2. **REMOVE FOUR SPARK PLUGS**

3. **DISCONNECT HIGH TENSION WIRE FROM IGNITION COIL**

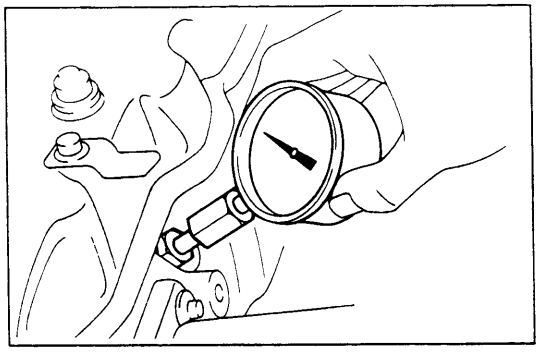

4. **MEASURE CYLINDER COMPRESSION PRESSURE**

   (a) Insert a compression gauge into the spark plug hole.

   (b) Fully open the throttle.

   (c) While cranking the engine with the starter motor, measure the compression pressure.

   CAUTION: This test must be done for as short a time as possible to avoid overheating of the catalytic converter.

   NOTE: A fully changed battery must be used to obtain at least 250 rpm.

   (d) Repeat steps (a) through (c) for each cylinder.

   Compression pressure: 12 kg/cm² (171 psi, 1,177 kPa)
   Minimum pressure: 10 kg/cm² (142 psi, 981 kPa)
   Difference between each cylinder: Less than 1.0 kg/cm² (14 psi, 98 kPa)

   (e) If cylinder compression in one or more cylinders is low, pour a small amount of engine oil into the cylinder through the spark plug hole and repeat steps (a) through (c) for the low compression cylinder.

   - If adding oil helps the compression, chances are that the piston rings and/or cylinder bore are worn or damaged.
   - If pressure stays low, a valve may be sticking or seating improperly, or there may be leakage past the gasket.

CYLINDER HEAD

COMPONENTS

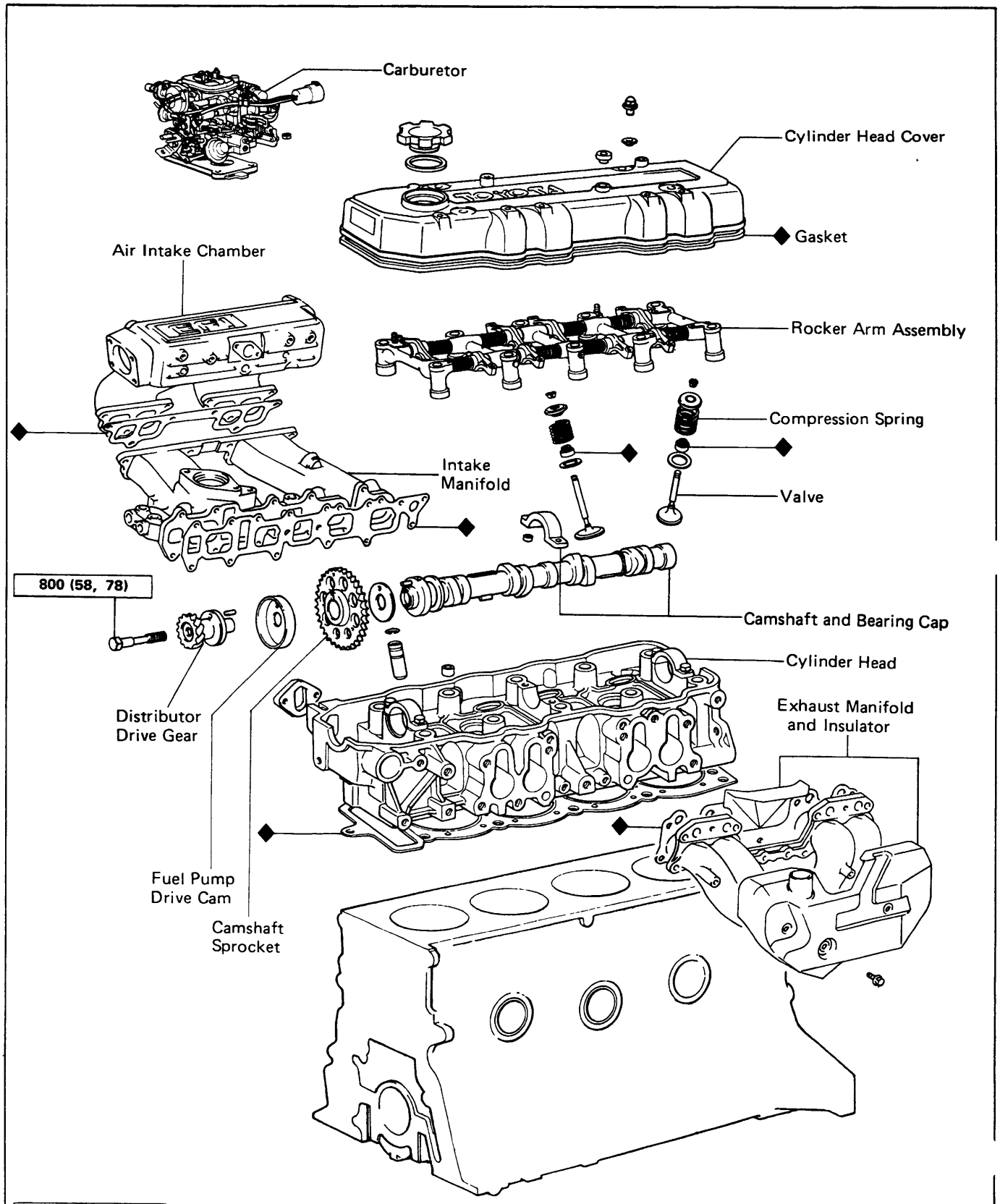

kg-cm (ft-lb, N-m) : Tightening torque

◆ : Non-reusable part

EM0817

22R-E

PREPARATION FOR REMOVAL

1. **DISCONNECT CABLE FROM NEGATIVE TERMINAL OF BATTERY**

2. **DRAIN COOLANT FROM RADIATOR AND CYLINDER BLOCK**

3. **DRAIN ENGINE OIL**

4. **REMOVE AIR CLEANER HOSE**

5. **DISCONNECT EXHAUST PIPE FROM EXHAUST MANIFOLD**
   (a) Disconnect the Ox sensor wire.
   (b) Remove three nuts holding exhaust manifold to the exhaust pipe.

6. **DISCONNECT RADIATOR UPPER HOSE FROM THERMOSTAT HOUSING**

7. **DISCONNECT TWO HEATER HOSES**

8. **DISCONNECT ACCELERATOR CABLE**
   Disconnect the accelerator cable and throttle cable for A/T from the bracket.

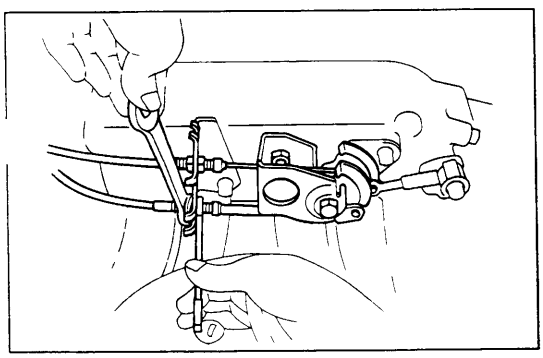

9. **DISCONNECT FOLLOWING PARTS:**
   (a) PCV hoses No.1 and No.2
   (b) Brake booster hose
   (c) Air control valve hoses
   (d) EVAP hose (from canister)
   (e) Actuator hose (with cruise control)
   (f) EGR vacuum modulator hose
   (g) Air valve hose No.1 from the throttle body
   (h) Air valve hose No.2 from the chamber
   (i) Water by-pass hoses No.2 and No.3 from the throttle body
   (j) Air control valve hose for actuator
   (k) Pressure regulator hose from the chamber
   (l) Cold start injection pipe
   (m) BVSV hoses

10. **DISCONNECT FOLLOWING WIRES:**
    (a) Cold start injection wire
    (b) Throttle position wire
    (c) Air valve wire

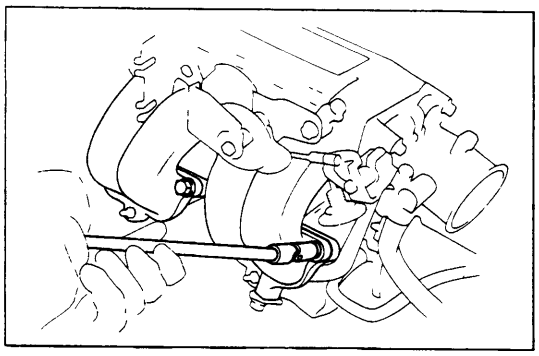

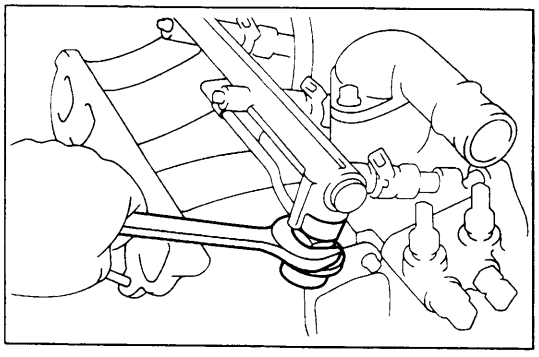

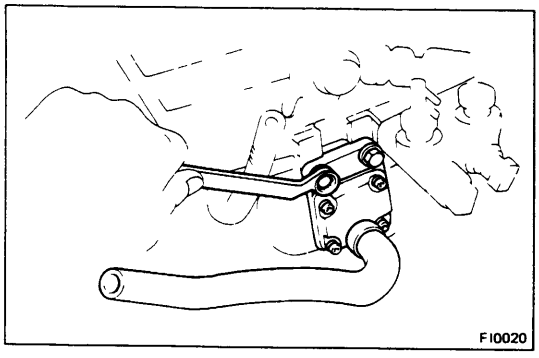

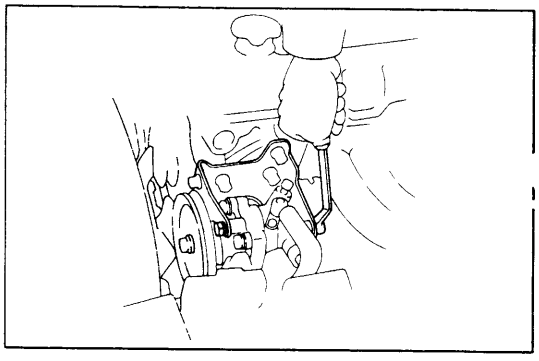

11. REMOVE CHAMBER WITH THROTTLE BODY

(a) Remove the bolt holding the EGR valve to the chamber.

(b) Disconnect the chamber and stay.

(c) Remove the bolts and nuts holding the chamber to the intake manifold.

(d) Remove the chamber with the throttle body.

12. DISCONNECT FOLLOWING WIRES:

(a) Water temperature sender gauge wire

(b) Temperature sensor wire

(c) Start injection time switch wire

(d) OD thermo switch wire (with A/T)

(e) Injection wires

13. DISCONNECT FUEL HOSE FROM DELIVERY PIPE

(a) Remove the pulsation damper.

(b) Remove the bolt holding the fuel hose to the delivery pipe.

(c) Disconnect the fuel hose from the delivery pipe.

14. REMOVE AIR VALVE FROM INTAKE MANIFOLD

(a) Disconnect the No.4 by-pass hose.

(b) Remove the air valve from intake manifold.

15. DISCONNECT BY-PASS HOSE FROM INTAKE MANIFOLD

16. REMOVE DISTRIBUTOR AND SPARK PLUGS

17. DISCONNECT BOND CABLE FROM VANE PUMP BRACKET

18. IF VEHICLE HAS POWER STEERING, REMOVE VANE PUMP WITH BRACKET

(a) Disconnect the vacuum hose from the air control valve.

(b) Loosen and remove the drive belt.

(c) Remove the vane pump to one side without disconnecting the hoses.

19. DISCONNECT BOND CABLE ON REAR SIDE

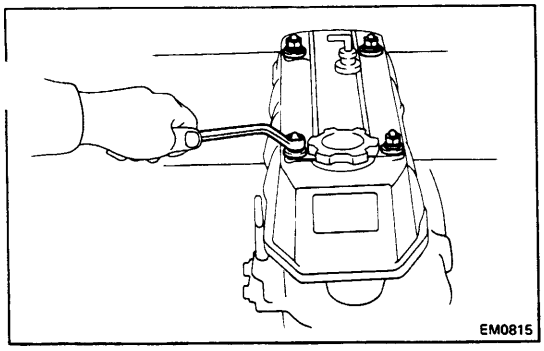

REMOVAL OF CYLINDER HEAD

1. REMOVE HEAD COVER

(a) Remove the bond cable from the body.

(b) Remove the four nuts and seals.

(c) Remove the head cover.

CAUTION: Cover the oil return hole in the head with a rag to prevent objects from falling in.

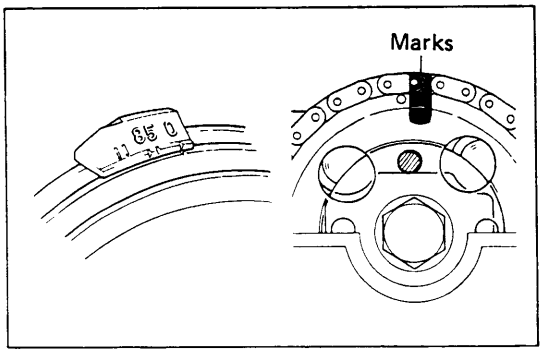

2. REMOVE CAM SPROCKET BOLT

(a) Turn the crankshaft until the No.1 cylinder position is set at T.D.C. compression.

(b) Place matchmarks on the sprocket and chain.

(c) Remove the semi-circular plug.

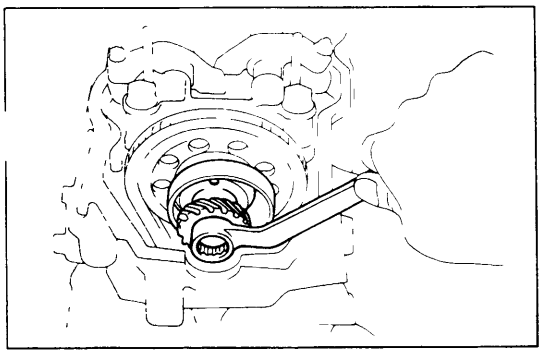

(d) Remove the cam sprocket bolt.

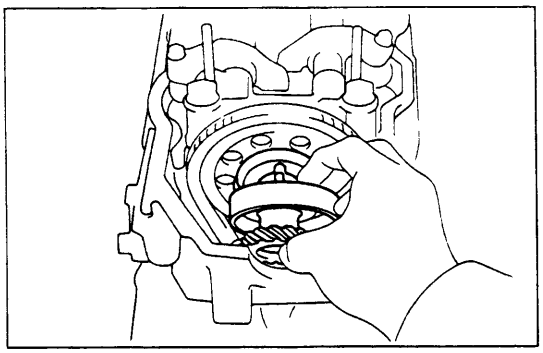

3. REMOVE DISTRIBUTOR DRIVE GEAR AND FUEL PUMP DRIVE CAM (22R) or CAMSHAFT THRUST PLATE (22R-E)

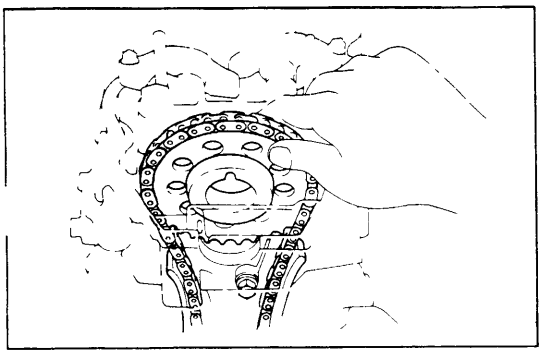

4. REMOVE CAM SPROCKET

Remove the cam sprocket and chain from the camshaft and leave on the vibration damper.

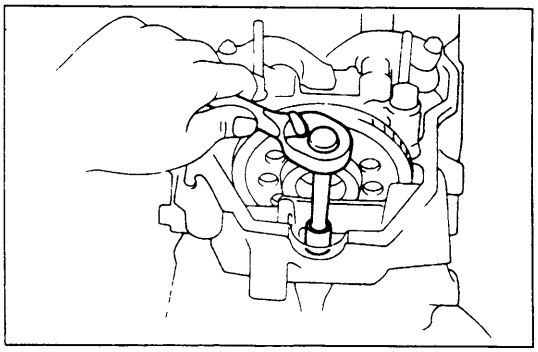

5. REMOVE CHAIN COVER BOLT

Remove the bolt in front of the head before the other head bolts are removed.

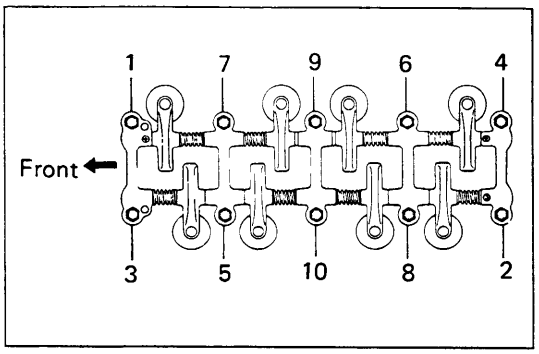

6. REMOVE CYLINDER HEAD BOLTS

Remove the head bolts gradually in two or three passes and in the numerical order shown.

CAUTION: Head warpage or cracking could result from removing in incorrect order.

7. REMOVE ROCKER ARM ASSEMBLY

It may be necessary to use a pry bar on the front and rear of the rocker arm assembly to separate it from the head.

8. REMOVE CYLINDER HEAD

Lift the cylinder head from the dowels on the cylinder block and place the head on wooden blocks on a bench.
NOTE: If the cylinder head is difficult to lift off, pry with a screwdriver between the head and block saliences.

CAUTION: Be careful not to damage the cylinder head and block surfaces of the cylinder head gasket side.

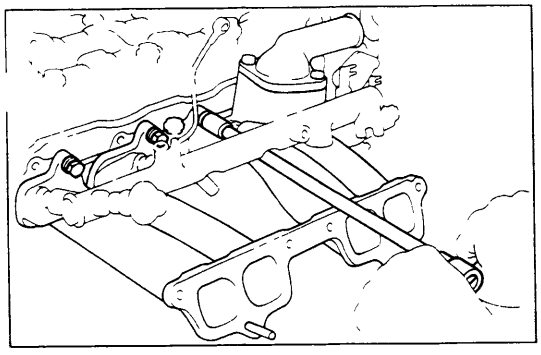

DISASSEMBLY OF CYLINDER HEAD

(See page EM-12)

1. **REMOVE INTAKE MANIFOLD WITH DELIVERY PIPE AND INJECTION NOZZLE**
   (a) Remove the six bolts, one hexagon bolt and two nuts.
   (b) Remove the intake manifold together with the delivery pipe and the injection nozzles.

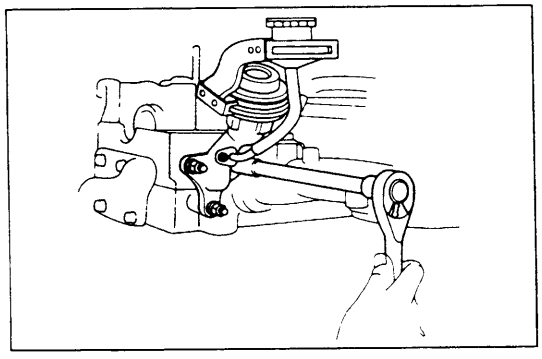

2. **REMOVE EGR VALVE WITH VACUUM MODULATOR FROM CYLINDER HEAD**

3. **REMOVE EXHAUST MANIFOLD FROM CYLINDER HEAD**

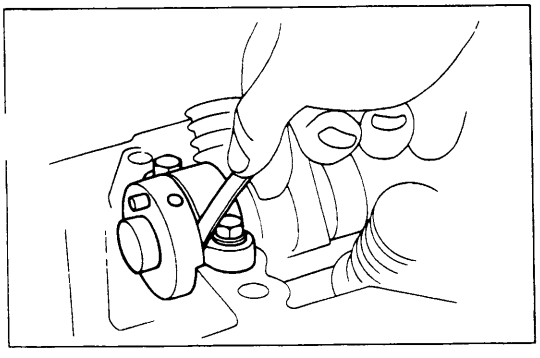

4. **MEASURE CAMSHAFT THRUST CLEARANCE**
   Using a feeler gauge, measure the camshaft thrust clearance between the thrust bearing and camshaft.
   If clearance is greater than the maximum, replace the head.
   Maximum clearance: 0.25 mm (0.010 in.)
   Standard clearance: 0.08 — 0.18 mm (0.003 — 0.007 in.)

5. **REMOVE CAM BEARING CAPS AND SHAFT**

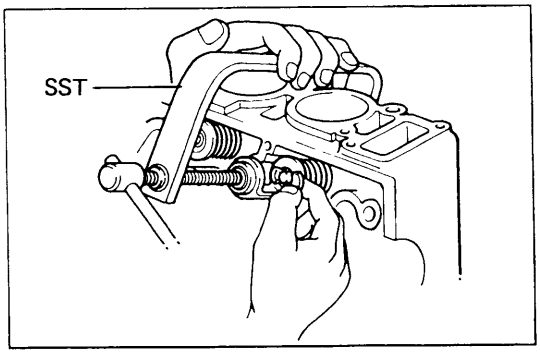

6. **REMOVE VALVES**
   (a) Using SST, compress the valve retainer until the two keepers can be removed.
   SST 09202-43013
   (b) Remove the valve keepers, retainers, springs and valves.

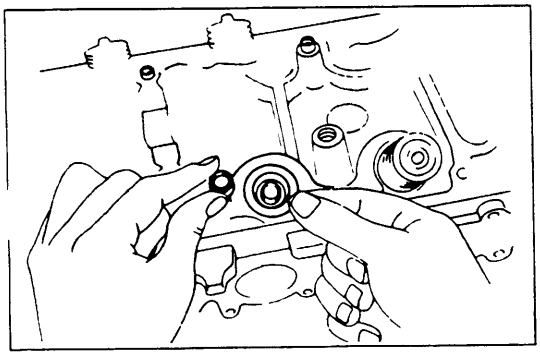

   (c) Remove the valve seals.
   (d) Using a small screwdriver or magnet, remove the valve spring seats.
   NOTE: Keep the valves arranged so they can be installed in the same order as removed.

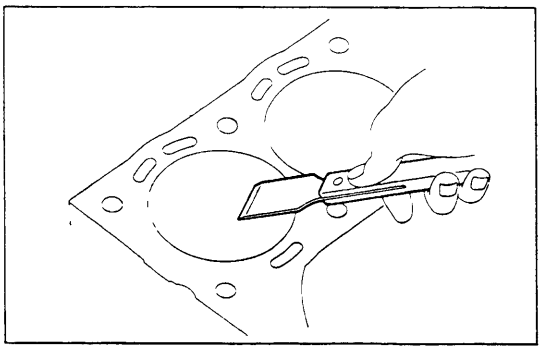

INSPECTION AND CLEANING OF CYLINDER HEAD COMPONENTS

1. CLEAN TOP OF PISTONS AND TOP OF BLOCK

(a) Turn the crankshaft and bring each piston to top dead center. Scrape the carbon from the piston top.

(b) Remove all gasket material from the top of the block. Blow carbon and oil from the bolt holes.

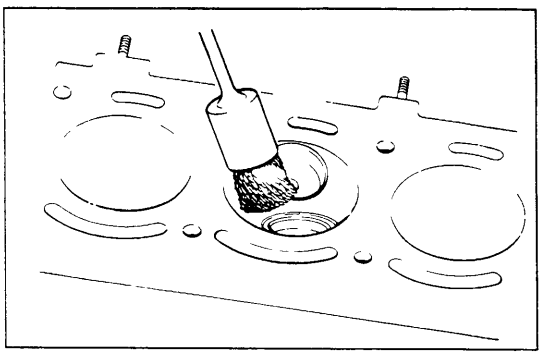

2. CLEAN COMBUSTION CHAMBER

Using a wire brush, remove all the carbon from the combustion chambers.

CAUTION: Be careful not to scratch the head gasket contact surface.

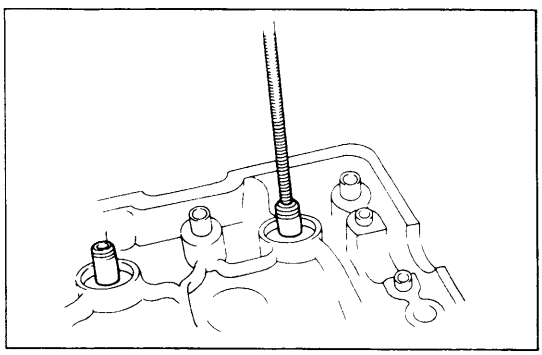

3. CLEAN VALVE GUIDES

Using a valve guide brush and solvent, clean all valve guides.

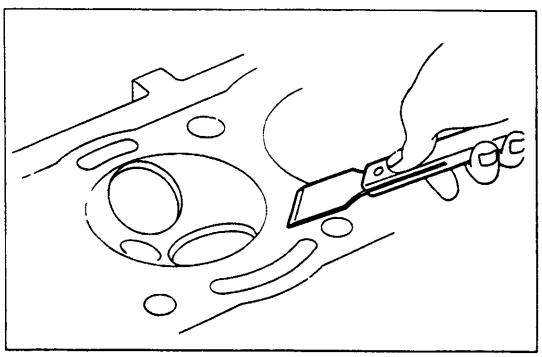

4. REMOVE GASKET MATERIAL

Using a gasket scraper, remove all gasket material from the manifold and head surfaces.

CAUTION: Do not scratch the surfaces.

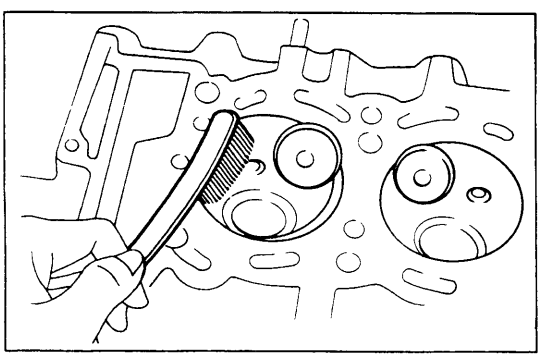

5. CLEAN CYLINDER HEAD

Using a soft brush and solvent, clean the head.

CAUTION: Do not clean the head in a hot tank as this will seriously damage it.

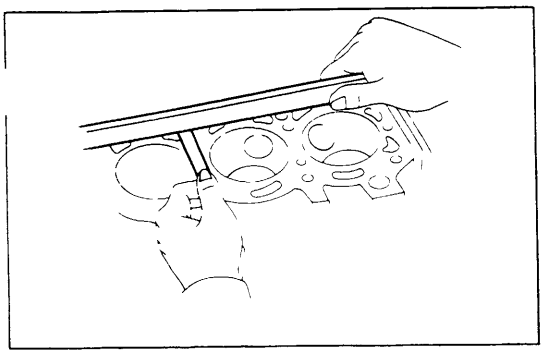

6. INSPECT HEAD FOR FLATNESS

(a) Using a precision straightedge and feeler gauge, check that the head and manifold surfaces are not warped.

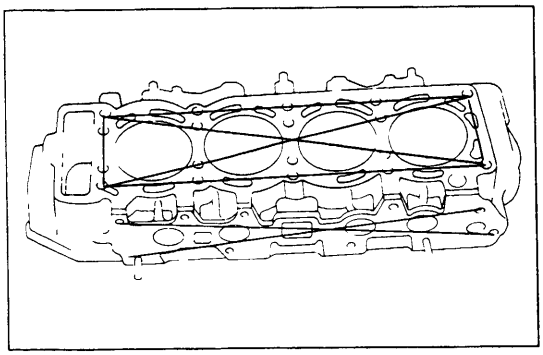

(b) Measure warpage along the four edges and diagonally as illustrated.

If warpage is greater than specified value, replace the head.

Maximum head surface warpage: 0.15 mm (0.0059 in.)
Maximum manifold surface warpage: 0.20 mm (0.0079 in.)

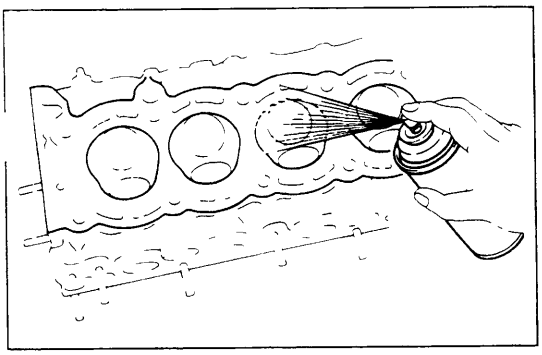

7. INSPECT CYLINDER HEAD FOR CRACKS

Using a dye penetrant, check the combustion chamber, intake and exhaust ports, head surface and the top of the head for cracks.

If a crack is found, replace the head.

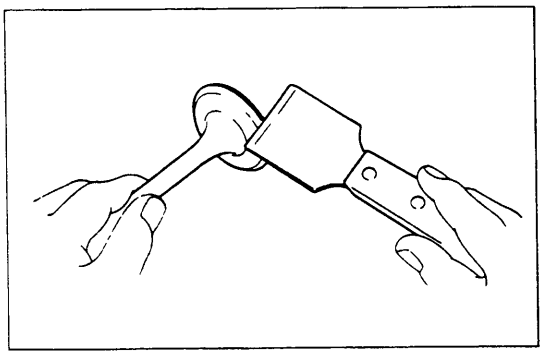

8. CLEAN VALVES

Use an old valve to chip any carbon from the valve head. Using a gasket scraper, clean the valve thoroughly.

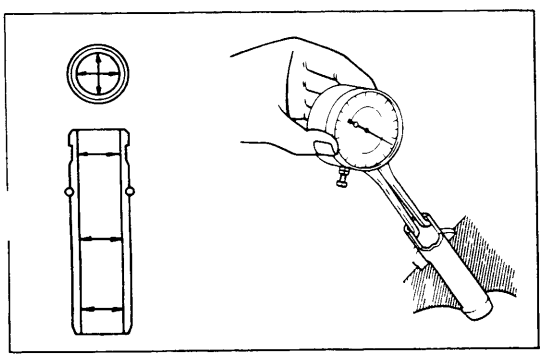

9. INSPECT VALVE STEM GUIDE WEAR

(a) Using a dial indicator or telescoping gauge, measure the inside diameter of the valve guide.

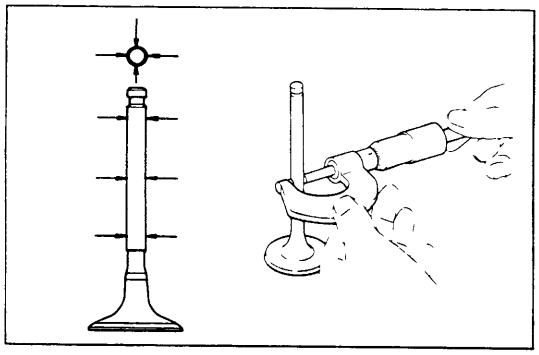

(b) Using a micrometer, measure the diameter of the valve stem.

(c) Subtract the valve stem measurement from the va guide measurement.

If the clearance is greater than the following values, replace the valve and guide:

Maximum intake clearance: 0.08 mm (0.0031 in.)
Maximum exhaust clearance: 0.10 mm (0.0039 in.)

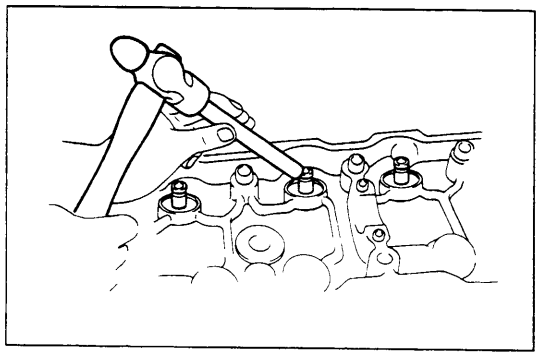

10. IF NECESSARY, REPLACE VALVE GUIDE

(a) Using a brass punch and hammer, break the valve guide.

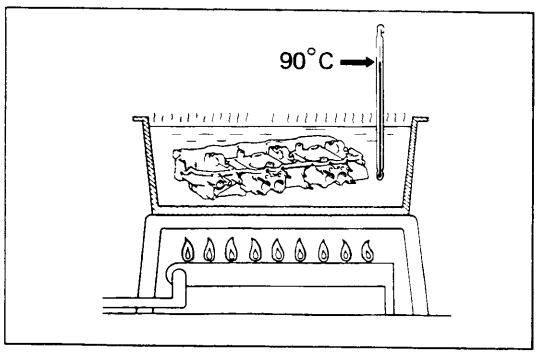

(b) Heat the cylinder head to about 90°C (194°F).

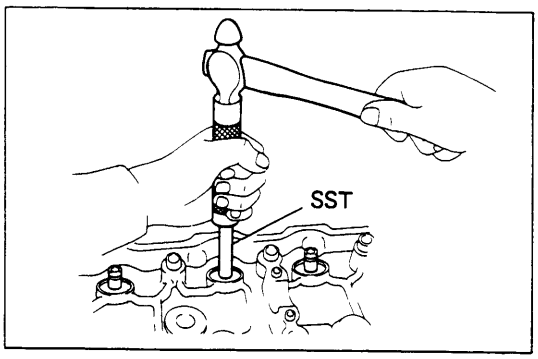

(c) Using SST and hammer, drive out the valve guide.

SST 09201-60011

(d) Heat the cylinder head to about 90°C (194°F).

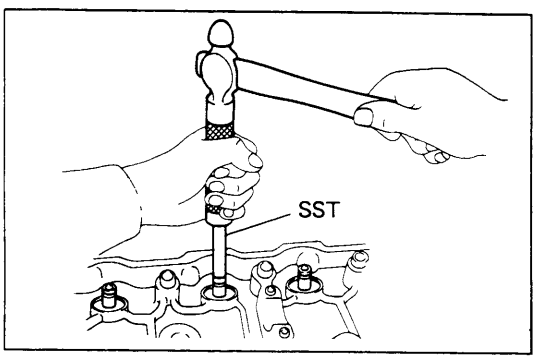

(e) Using SST and hammer, drive in a new valve guide until the snap ring makes contact with the cylinder head.

SST 09201-60011

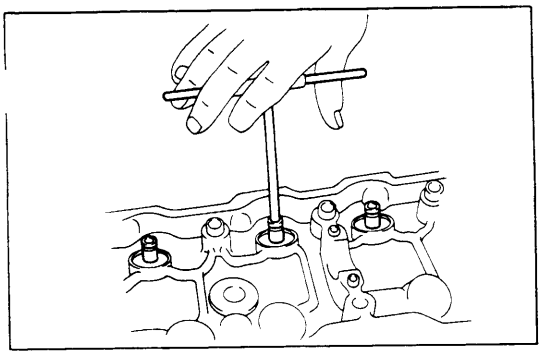

(f) Using a sharp 8 mm reamer, ream the valve guide to obtain the specified clearance between the guide and new valve.

Intake clearance: 0.02 — 0.06 mm (0.0008 — 0.0024 in.)
Exhaust clearance: 0.03 — 0.07 mm (0.0012 — 0.0028 in.)

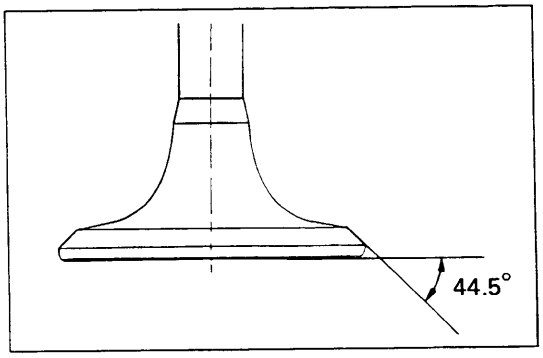

11. INSPECT AND GRIND VALVES

(a) Grind the valves only enough to remove pits and carbon.

Make sure the valves are ground at the correct valve face angle.

Valve face angle: 44.5°

(b) Check the valve head margin.

If the valve head margin is less than specified, replace the valve.

Minimum margin: 0.6 mm (0.024 in.)

(c) Check the surface of the valve stem tip for wear.

If the valve stem tip is worn, resurface the tip with a grinder or replace the valve.

CAUTION: Do not grind more than 0.5 mm (0.020 in.)

Standard overall length:
Intake 113.5 mm (4.468 in.)
Exhaust 112.4 mm (4.425 in.)

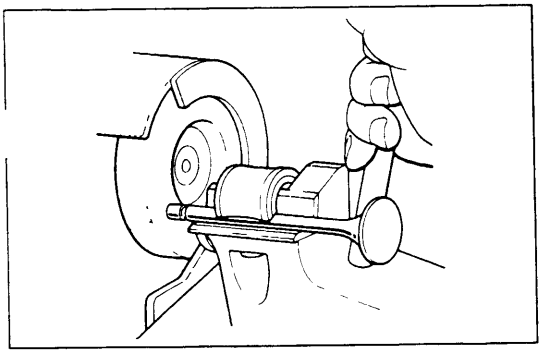

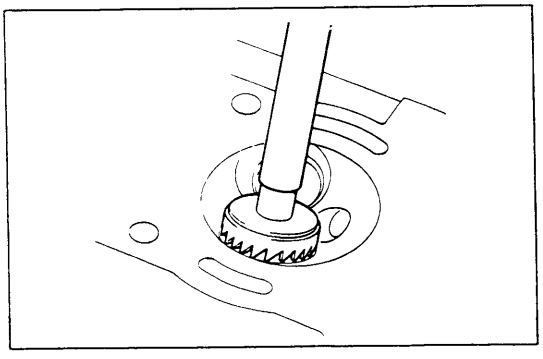

12. INSPECT AND CLEAN VALVE SEATS

(a) Using a 45° carbide cutter, resurface the valve seats. Remove enough metal to clean the seats.

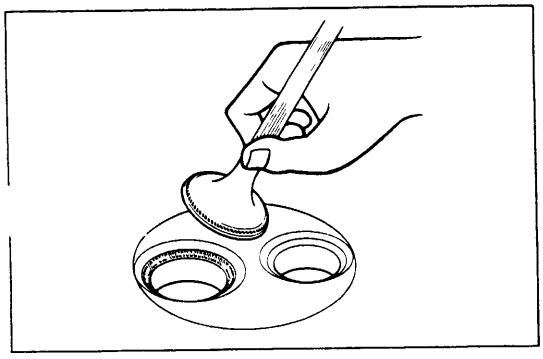

(b) Check the valve seating position.

Apply a thin coat of prussian blue (or white lead) to the valve face. Install the valve. While applying light pressure to the valve, rorate the valve against the seat.

(c) Check the valve face and seat for the following:

- If blue appears 360° around the face, the valve is concentric. If not, replace the valve.
- If blue appears 360° around the valve seat, the guide and seat are concentric. If not, resurface the seat.

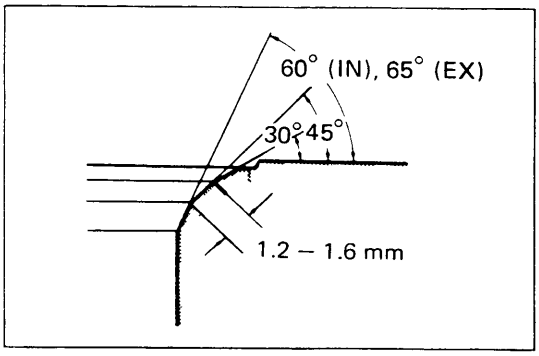

- Check that the seat contact is on the middle of the valve face with the following width:

  1.2 – 1.6 mm (0.047 – 0.063 in.)

  If not, correct the valve seat as follows:

  If seating is too high on the valve face, use 30° and 45° cutters to correct the seat.

  If seating is too low on the valve face, use 60° (IN) or 65° (EX) and 45° cutters to correct the seat.

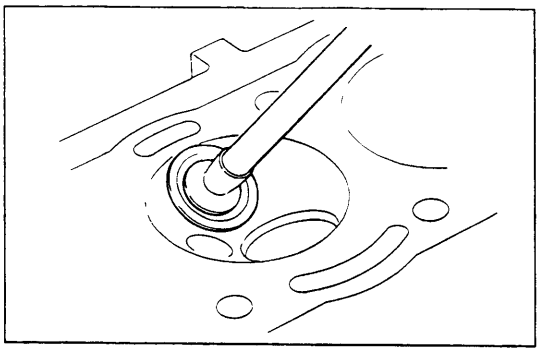

(d) Hand-lap the valve and valve seat together with abrasive compound.

(e) Clean the valve and valve seat after hand-lapping.

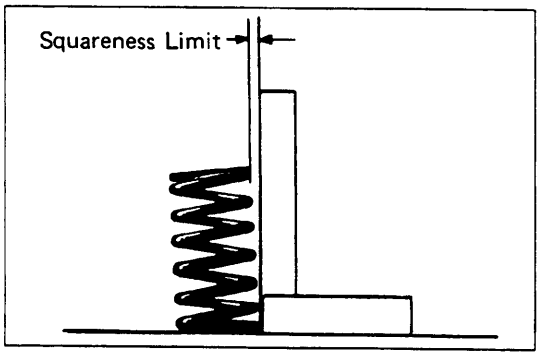

13. INSPECT VALVE SPRINGS

(a) Using a steel square, check the squareness of the valve springs. If a spring is out of square more than the maximum allowable, replace the spring.

Maximum allowable: 1.6 mm (0.063 in.)

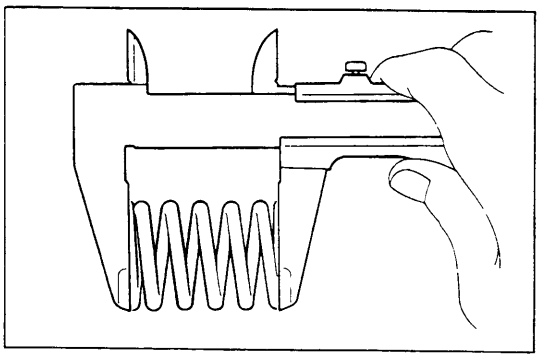

(b) Measure the free height of all springs. Replace any spring that is not correct.

Free height: 48.5 mm (1.909 in.)

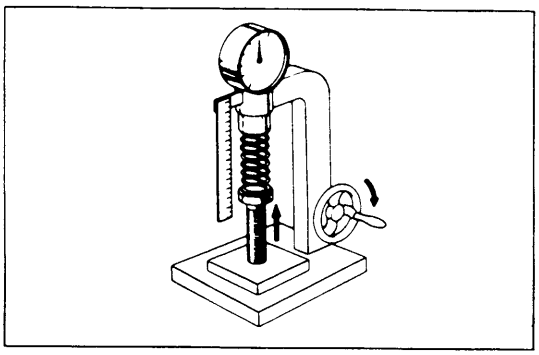

(c) Using a spring tester, check the tension of each spring at the specified installed height.

If the installed tension is less than the minimum, replace the spring.

Installed height: 40.5 mm (1.594 in.)
Minimum installed tension: 28.5 kg (62.8 lb, 279 N)

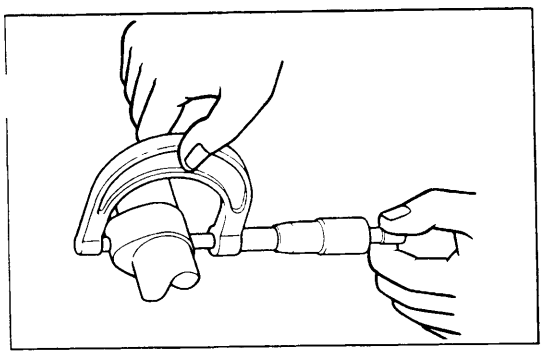

14. INSPECT CAMSHAFT AND BEARING CAPS

(a) Using a micrometer, measure the cam lobes.

If the lobe height is less than the minimum allowable, the camshaft is worn and must be replaced.

Minimum intake lobe height: 42.63 — 42.72 mm (1.6783 — 1.6819 in.)

Minimum exhaust lobe height: 42.69 — 42.78 mm (1.6807 — 1.6842 in.)

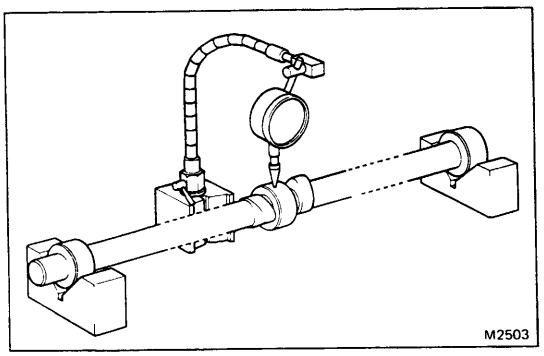

(b) Place the camshaft on V-blocks and measure the runout at the center journal.

If the runout is greater than the maximum allowable, replace the camshaft.

Maximum circle runout: 0.2 mm (0.008 in.)

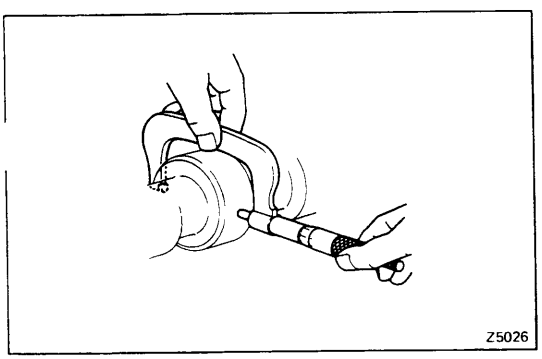

(c) Using a micrometer, measure the journal diameter.

Standard diameter: 32.98 — 33.00 mm (1.2984 — 1.2992 in.)

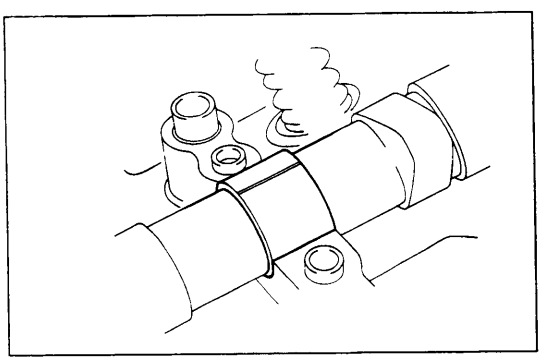

(d) Measure the camshaft journal oil clearance.

- Clean the bearing caps and camshaft journal.
- Lay a strip of Plastigage across each journal.

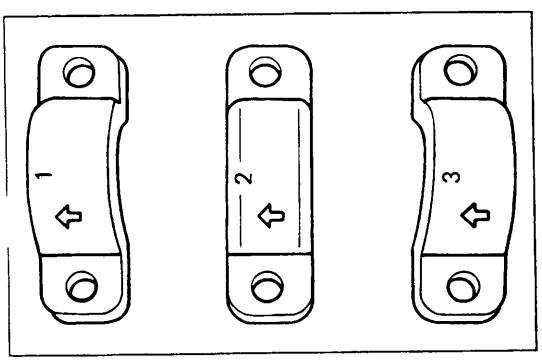

- Install the correct numbered bearing cap on each journal with the arrows pointing toward the front. Torque each bolt.

Torque: 200 kg-cm (14 ft-lb, 20 N·m)

NOTE: Do not turn the camshaft while the Plastigage is in place.

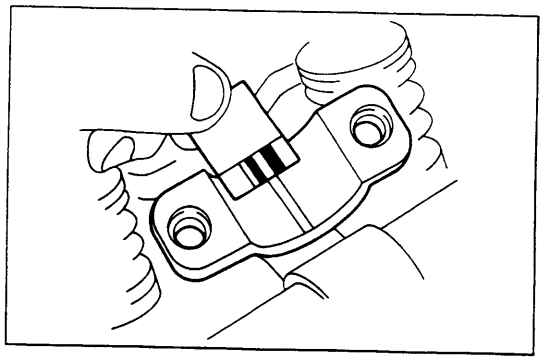

- Remove the caps. Measure the Plastigage at its widest point.

If clearance is greater than the maximum, replace head and/or camshaft.

Maximum clearance: 0.1 mm (0.004 in.)
Standard clearance: 0.01 — 0.05 mm (0.0004 — 0.0020 in.)

- Clean out the pieces of Plastigage from the bearings and journals.

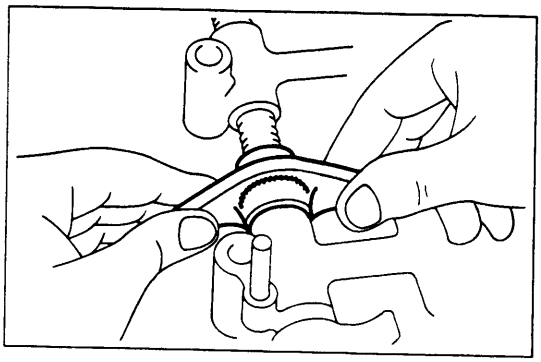

15. INSPECT ROCKER ARMS

Check the clearance between the rocker arms and shaft by moving the rocker arms as shown. Little or no movement should be felt.

If movement is felt, disassemble the rocker arm assembly and measure the oil clearance as follows:

(a) Disassemble rocker arm assembly.

- Remove the three screws.
- Slide the rocker stands, springs and rocker arms off the shafts.

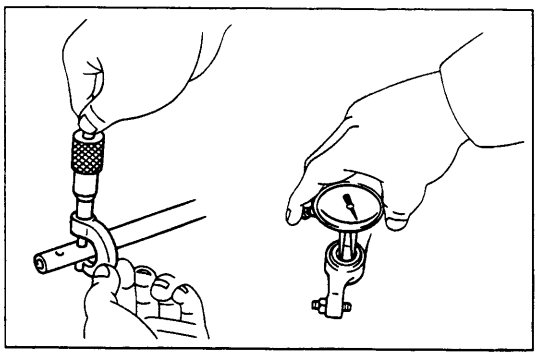

(b) Using a dial indicator, measure the inside diameter of the rocker arm. Using a micrometer, measure the outside diameter of the shaft. Subtract the shaft diameter from the rocker arm diameter.

If the oil clearance is not within specification, replace the rocker arm and/or shaft.

Maximum oil clearance: 0.08 mm (0.0031 in.)

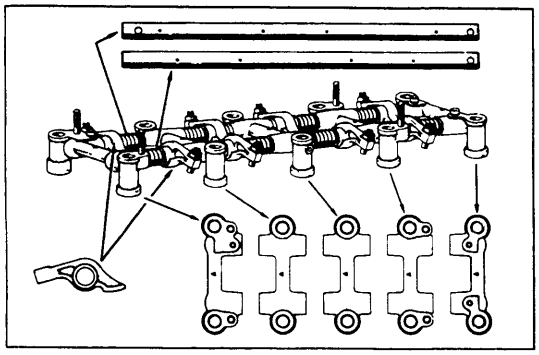

(c) Assemble the rocker arm assembly as shown, and install the three screws.

NOTE: All rocker arms are the same but all rocker stands are different and must be assembled in the correct order.

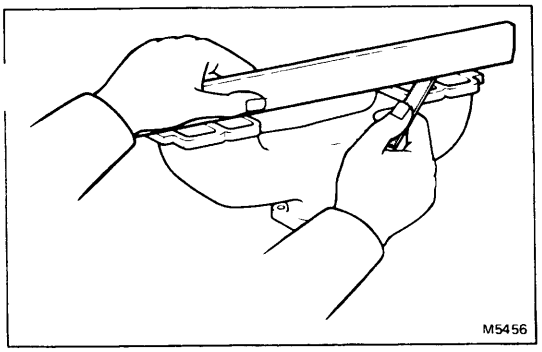

16. INSPECT INTAKE AND EXHAUST MANIFOLDS

Using a precision straightedge and feeler gauge, check the surfaces contacting the cylinder head for warpage. If warpage is greater than maximum, replace the manifold.

Maximum intake warpage:	**0.20 mm (0.0079 in.)**
Maximum exhaust warpage:	**0.70 mm (0.0276 in.)**

ASSEMBLY OF CYLINDER HEAD

(See page EM-12)

NOTE:
- Thoroughly clean all parts to be assembled.
- Before installing the parts, apply new engine oil to all sliding and rotating surfaces.
- Replace all gaskets and oil seals with new parts.

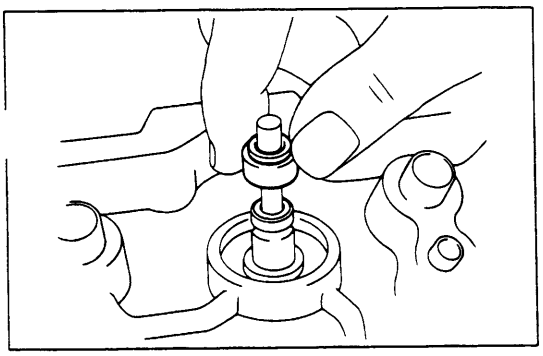

1. INSTALL VALVES

(a) Lubricate and insert valves in the cylinder head valve guides. Make sure the valves are installed in the correct order.

(b) Install the valve spring seats and seals.

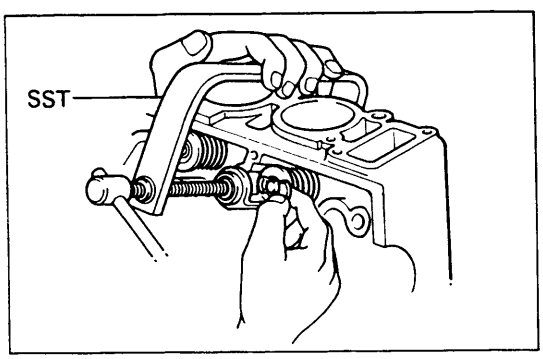

(c) Install springs and spring retainers on the valves.

(d) Using SST, compress valve retainers and place two keepers around the valve stem.

SST 09202-43013

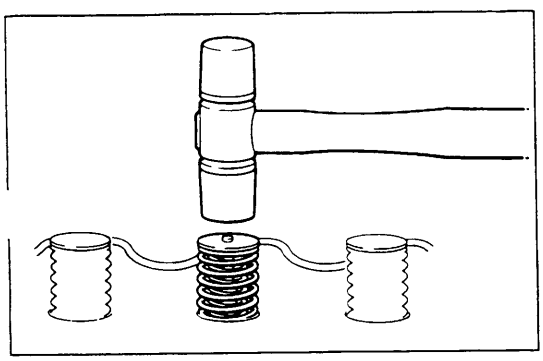

(e) Tap the stem lightly to assure proper fit.

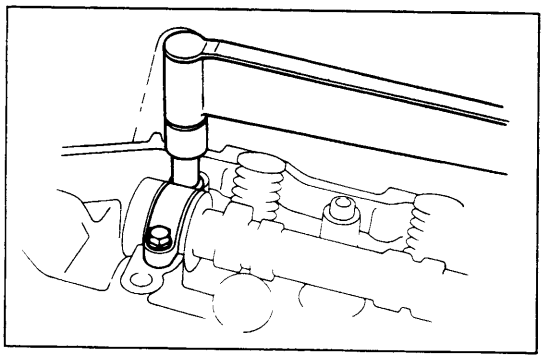

2. INSTALL CAMSHAFT

(a) Place the camshaft in the cylinder head and install the bearing caps in numbered order from the front w arrows pointing toward the front.

(b) Install and torque the cap bolts.

Torque: 200 kg-cm (14 ft-lb, 20 N·m)

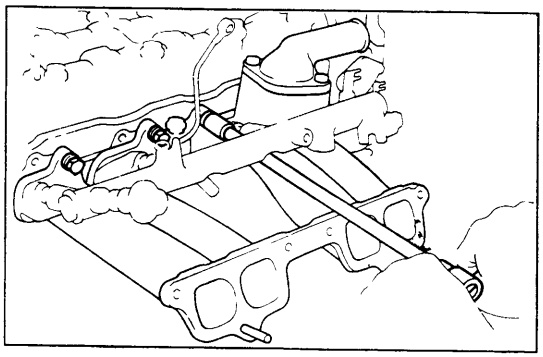

3. INSTALL INTAKE MANIFOLD

(a) Position a new gasket on the cylinder head.

(b) Install the intake manifold with the delivery pipe and injection nozzles.

(c) Install the six bolts, one hexagon bolt and two nuts. Torque the bolts and nuts.

Torque: 195 kg-cm (14 ft-lb, 19 N·m)

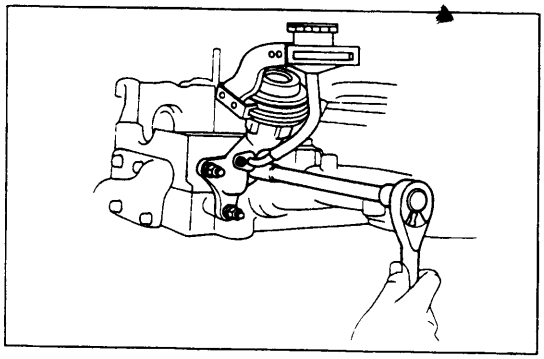

4. INSTALL EGR VALVE WITH VACUUM MODULATOR

(a) Position a new gasket on the cylinder head.

(b) Apply a sealer to the upper right bolt.

(c) Place the EGR with vacuum modulator valve in t. installed position and tighten the two bolts on the intake manifold side of EGR pipe.

(d) Install the vacuum hose to the top of the EGR valve.

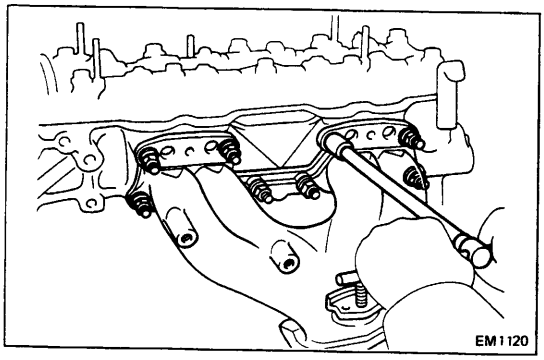

5. INSTALL EXHAUST MANIFOLD

(a) Position a new gasket on the cylinder head.

(b) Install the exhaust manifold with eight nuts. Torque the nuts.

Torque: 450 kg-cm (33 ft-lb, 44 N·m)

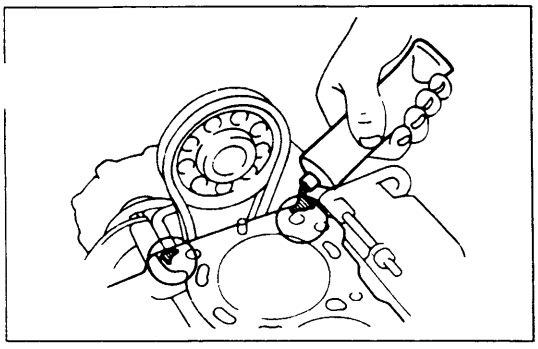

INSTALLATION OF CYLINDER HEAD

(See page EM-12)

1. APPLY SEALER TO CYLINDER BLOCK

(a) Apply liquid sealer to two locations as shown.

(b) Place a new head gasket over dowels on the cylinder block.

2. INSTALL CYLINDER HEAD

(a) If the sprocket was removed, align the alignment marks placed on the sprocket and chain during removal.

(b) Position the cylinder head over dowels on the block.

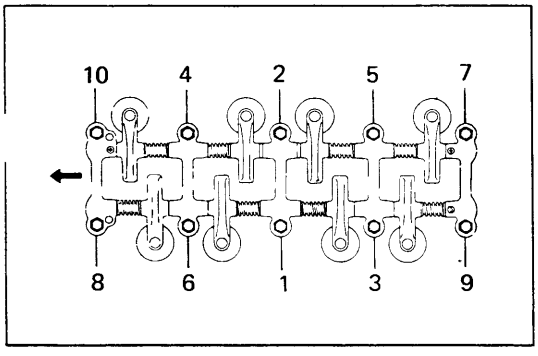

3. INSTALL ROCKER ARM ASSEMBLY

(a) Place the rocker arm assembly over the dowels on the cylinder head.

(b) Install and tighten the head bolts gradually in three passes and in the sequence shown. Torque the bolts on the final pass.

Torque: 800 kg-cm (58 ft-lb, 78 N·m)

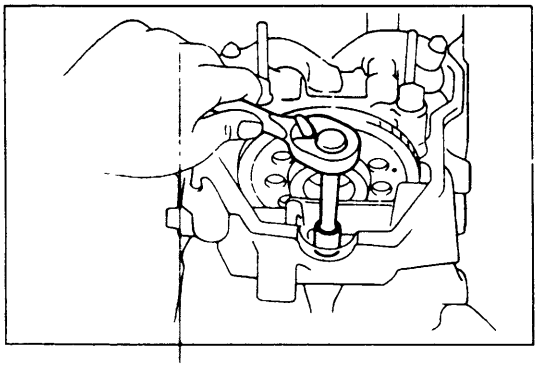

4. INSTALL CHAIN COVER BOLT

Torque the bolt.

Torque: 130 kg-cm (9 ft-lb, 13 N·m)

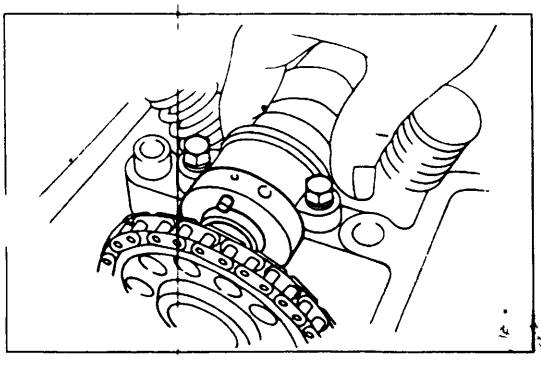

5. INSTALL CAM SPROCKET ON CAMSHAFT

(a) Turn the camshaft to position the dowel at the top.

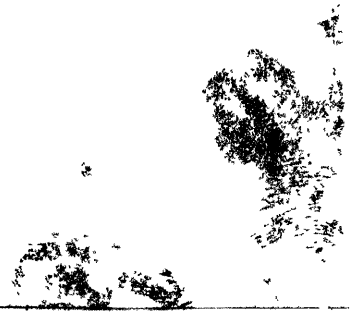

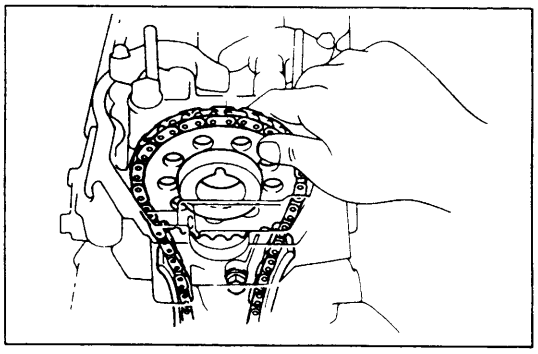

(b) While holding up on the sprocket and chain, turn the crankshaft until the No.1 and No.4 cylinders are at top dead center.

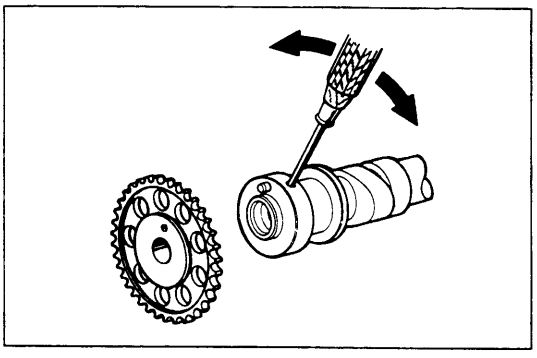

(c) Place the chain sprocket over the camshaft dowel.

NOTE: If the chain does not seem long enough, turn the camshaft back and forth while pulling up on the chain and sprocket.

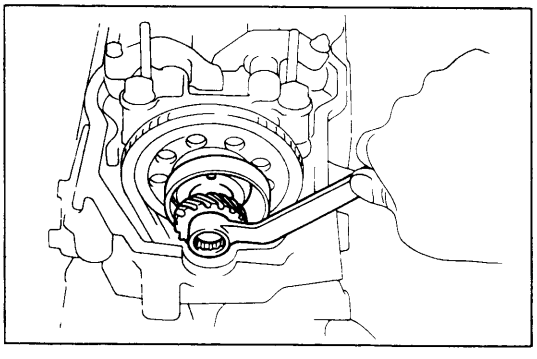

6. INSTALL DISTRIBUTOR DRIVE GEAR AND FUEL PUMP DRIVE CAM (22R) OR CAMSHAFT THRUST PLATE (22R-E)

Place the distributor drive gear and fuel pump drive cam over the chain sprocket. Torque the bolt.

Torque: 800 kg-cm (58 ft-lb, 78 N·m)

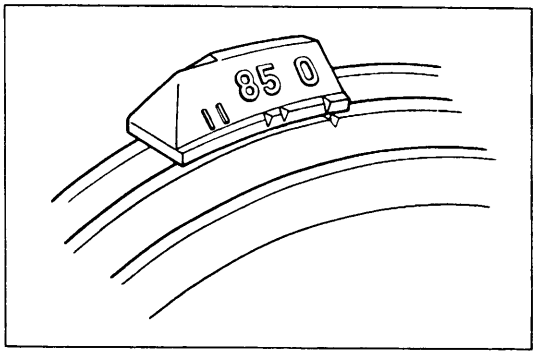

7. ADJUST VALVES CLEARANCE

(a) Set the No.1 cylinder to TDC/compression.

- Turn the crankshaft with a wrench to align the timing marks at TDC. Set the groove on the pulley at the O mark position timing mark.
- Check that the rocker arms on the No.1 cylinder are loose and the rockers on No.4 are tight.

If not, turn the crankshaft one complete revolution and align the marks as above.

(b) Adjust the clearance of half of the valves.

- Adjust only those valves indicated by arrows as shown.

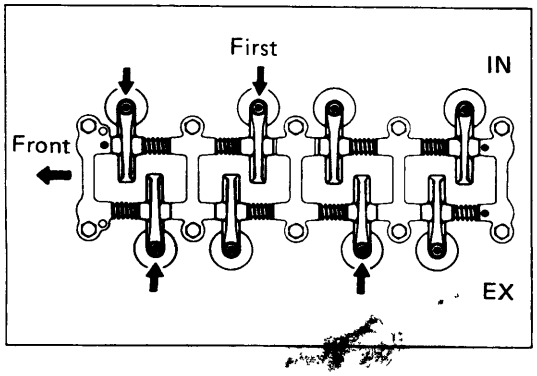

Intake clearance: 0.20 mm (0.008 in.)
Exhaust clearance: 0.30 mm (0.012 in.)

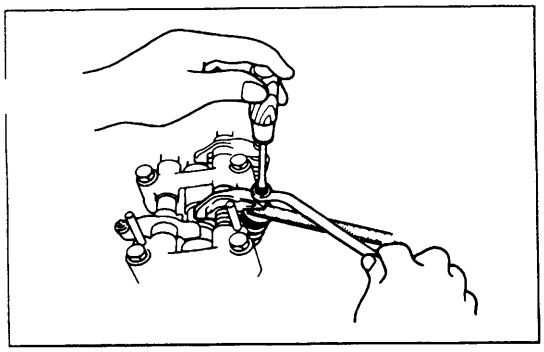

- Use a feeler gauge to measure between the valve stem and rocker arm. Loosen the lock nut and turn the adjusting screw to set the proper clearance. Hold the adjusting screw in position and tighten the lock nut.
- Recheck the clearance. The feeler gauge should move with a very slight drag.

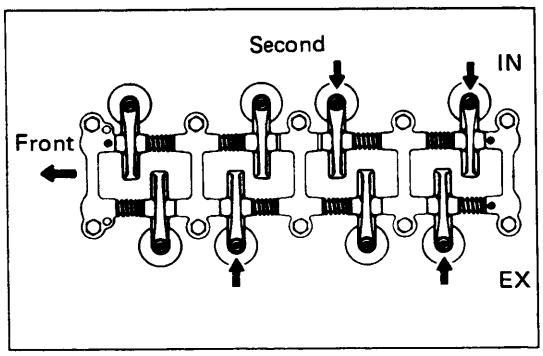

(c) Turn the crankshaft one revolution and adjust the other valves.

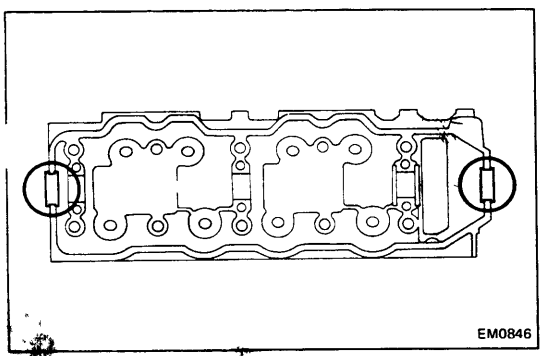

8. INTALL SEMI-CIRCULAR PLUG

Apply liquid sealer to the cylinder head installation surface of the plug.

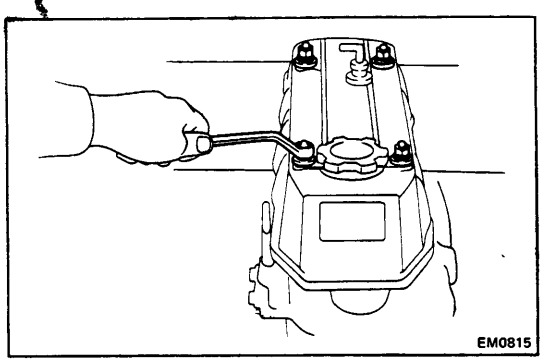

9. INSTALL HEAD COVER

(a) Install the gasket to the cylinder head.

(b) Place the head cover on the cylinder head and install the four seals and nuts.

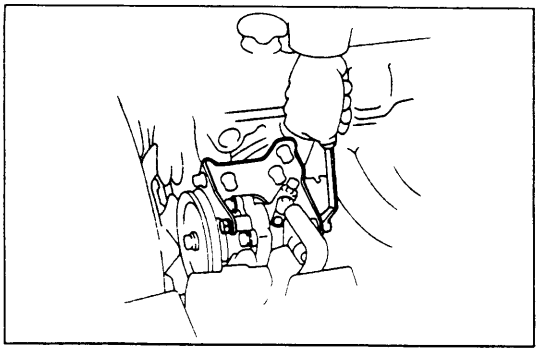

POST INSTALLATION

1. **INSTALL VANE PUMP WITH BRACKET**
   (With power steering)
   (a) Position the vane pump with the bracket.
   (b) Install the five bolts and one bolt with the bond cable. Torque the bolts.
   Torque: 450 kg-cm (33 ft-lb, 44 N·m)
2. **INSTALL DRIVE BELT AND ADJUST BELT TENSION**
   (See step 1 on page MA-17)
3. **CONNECT BY-PASS HOSE TO INTAKE MANIFOLD**
4. **INSTALL AIR VALVE TO INTAKE MANIFOLD**
   (a) Install the air valve to the intake manifold.
   (b) Connect by-pass hose No.4.

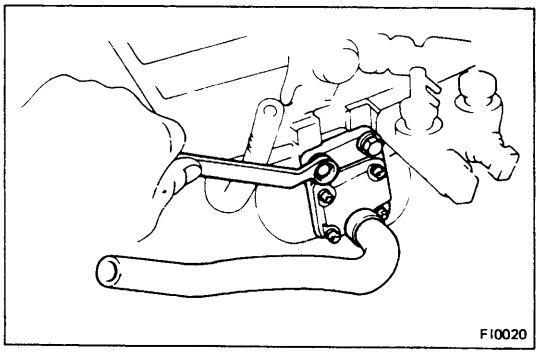

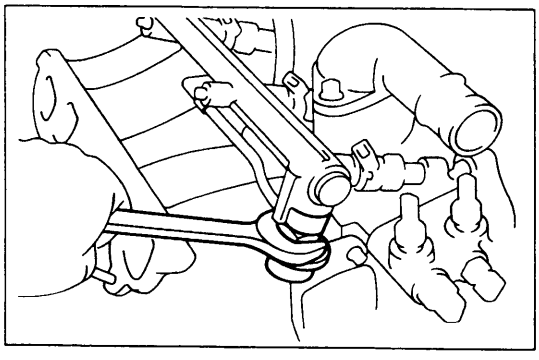

5. **CONNECT FUEL HOSE TO DELIVERY PIPE**
   (a) Install the fuel hose with a bolt.
   (b) Install the pulsation damper and new gaskets and torque the damper.
   Torque: 450 kg-cm (33 ft-lb, 44 N·m)
6. **CONNECT FOLLOWING WIRES:**
   (a) Injection wires
   (b) OD thermo switch wire (with A/T)
   (c) Start injection time switch wire
   (d) Temperature sensor wire
   (e) Water temperature sender gauge wire

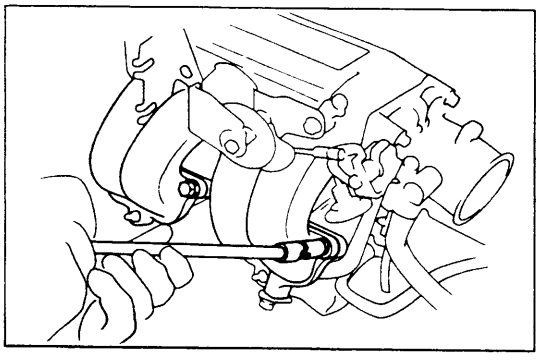

7. **INSTALL CHAMBER WITH THROTTLE BODY**
   (a) Position a new gasket on the intake manifold.
   (b) Install the chamber and throttle body with four bolts and two nuts.
   (c) Connect the chamber and stay with a bolt.
   (d) Install the EGR valve to the chamber.
8. **CONNECT FOLLOWING WIRES:**
   (a) Air valve wire
   (b) Throttle position wire
   (c) Cold start injection wire

9. CONNECT FOLLOWING PARTS:

(a) BVSV hoses

(b) Cold start injection pipe

(c) Pressure regulator hose to the chamber.

(d) Air control valve hose to the actuator

(e) Water by-pass hoses No.2 and No.3 from the throttle body.

(f) Air valve hose No.2 to the chamber

(g) Air valve hose No.1 to the throttle body

(h) EGR vacuum modulator hose

(i) Actuater hose (with cruise control)

(j) EVAP hose (to canister)

(k) Air control valve hoses

(l) Brake booster hose

(m) PCV hoses No.1 and No.2

10. CONNECT BOND CABLE OF REAR SIDE

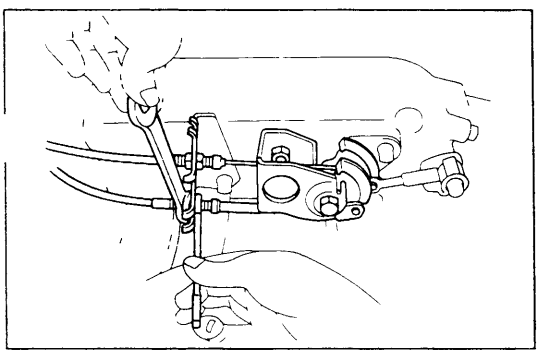

11. CONNECT ACCELERATOR CABLE

Connect the accelerator cable and throttle cable for A/T to the bracket.

12. CONNECT TWO HEATER HOSES

13. CONNECT RADIATOR UPPER HOSE FOR THERMOSTAT HOUSING

14. CONNECT EXHAUST PIPE TO EXHAUST MANIFOLD

(a) Connect the exhaust pipe and exhaust manifold with the three bolts.

(b) Connect the Ox sensor wire.

15. INSTALL AIR CLEANER HOSE

16. INSTALL DISTRIBUTOR AND SPARK PLUGS, AND SET TIMING (See page IG-10)

17. FILL WITH ENGINE OIL

Fill the engine with new oil, API grade SF or SF/CC multi-grade, fuel efficient, and recommended viscosity oil.

Oil capacity:

Dry fill	**4.8 liters (5.1 US qts, 4.2 Imp. qts)**
Drain and refill	
w/o Oil filter change	**4.0 liters (4.2 US qts, 3.5 Imp. qts)**
w/ Oil filter change	**4.6 liters (4.9 US qts, 4.0 Imp. qts)**

18. **FILL WITH COOLANT**

Close the radiator and engine drain cocks and fill with coolant.

Total capacity: w/Heater 8.4 liters (8.9 US qts, 7.4 Imp. qts)

19. **CONNECT CABLE TO NEGATIVE TERMINAL OF BATTERY**

20. **START ENGINE**

Warm up the engine and inspect for leaks.

21. **PERFORM ENGINE ADJUSTMENT**

(a) Retighten the cylinder head bolts. (See step 3 on page EM-27)

(b) Readjust the valve clearance. (See page MA-13)

(c) Recheck ignition timing. (See step 1 on page IG-10)

(d) Adjust idle speed. (See step 14 on page MA-14)

22. **RECHECK COOLANT AND ENGINE OIL LEVEL**

23. **ROAD TEST**

Perform a road test.

22R
PREPARATION FOR REMOVAL

(See page EM-12)

1. **DISCONNECT CABLE FROM NEGATIVE TERMINAL OF BATTERY**

2. **DRAIN COOLANT FROM RADIATOR AND CYLINDER BLOCK**

3. **DRAIN ENGINE OIL**

4. **REMOVE AIR CLEANER**
   (a) Disconnect air hoses and air duct from the air cleaner.
   (b) Remove the two nuts and wing nut.
   (c) Remove the air cleaner.

5. **DISCONNECT EXHAUST PIPE FROM EXHAUST MANIFOLD**
   Remove three nuts holding the exhaust manifold to the exhaust pipe.

6. **DISCONNECT RADIATOR UPPER HOSE FROM THERMOSTAT HOUSING**

7. **DISCONNECT TWO HEATER HOSES**

8. **DISCONNECT ACCELERATOR CABLE FROM CARBURETOR**
   Disconnect the cable from the carburetor and bracket.

9. **DISCONNECT FOLLOWING WIRES:**
   (a) VSV wire for A/C
   (b) Vacuum switch wire
   (c) VSV wire for EVAP
   (d) Water temperature sender gauge wire
   (e) Cold mixture heater wire
   (f) Thermo switch wire
   (g) Fuel cut solenoid valve wire
   (h) EACV wire (for Calif.)

10. **DISCONNECT FOLLOWING PARTS:**
    (a) Charcoal canister hose
    (b) Brake booster hose
    (c) Fuel main hose from the fuel inlet pipe
    (d) Fuel return hose from the fuel return pipe
    (e) HAC from the bracket (Ex. Calif.)
    (f) Vacuum switch, EBCV (For Calif.) and VSV with the bracket

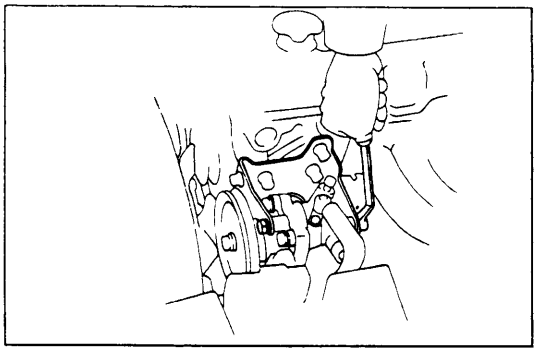

11. REMOVE BOND CABLE OF REAR SIDE

12. REMOVE DISTRIBUTOR AND SPARK PLUGS

13. IF VEHICLE HAS POWER STEERING, REMOVE VANE PUMP WITH BRACKET
    (a) Remove the drive belt.
    (b) Remove the vane pump with the bracket.
    NOTE: Lay the vane pump to one side without disconnecting the hoses.

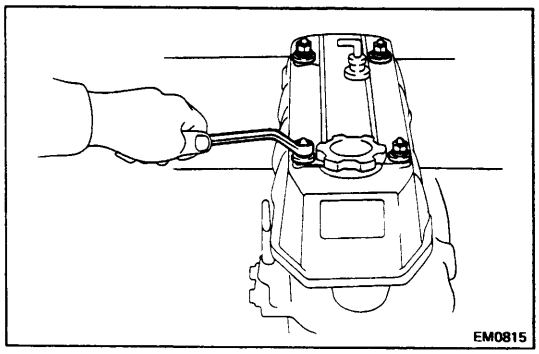

REMOVAL OF CYLINDER HEAD

(See page EM-12)

1. REMOVE HEAD COVER (See step 1 on page EM-15)

2. REMOVE CAM SPROCKET BOLT
   (See step 2 on page EM-15)

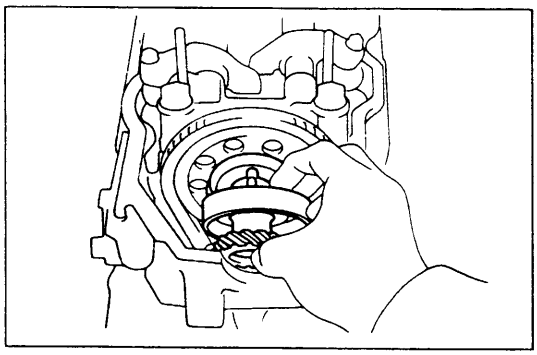

3. REMOVE DISTRIBUTOR DRIVE GEAR AND FUEL PUMP DRIVE CAM (See step 3 on page EM-15)

4. REMOVE CAM SPROCKET
   (See step 4 on page EM-16)

5. REMOVE CHAIN COVER BOLT
   (See step 5 on page EM-16)

6. REMOVE CYLINDER HEAD BOLTS
   (See step 6 on page EM-16)

7. REMOVE ROCKER ARM ASSEMBLY
   (See step 7 on page EM-16)

8. REMOVE CYLINDER HEAD
   (See step 8 on page EM-16)

DISASSEMBLY OF CYLINDER HEAD

(See page EM-12)

1. **REMOVE HEAT INSULATER FROM EXHAUST MANIFOLD**
2. **REMOVE CHECK VALVE WITH AIR PIPE**
   (a) Disconnect the air pipe from the exhaust manifold.
   (b) Disconnect air hose No.3 from the EACV.
   (c) Remove the check valve with the air pipe.
3. **REMOVE FUEL PUMP FROM CYLINDER HEAD**
   (a) Remove the three fuel hoses from the fuel pump.
   (b) Remove the fuel pump from the cylinder head.
4. **REMOVE FUEL PIPE FROM INTAKE MANIFOLD**
5. **REMOVE ENGINE HANGER AND AIR PIPE FROM CYLINDER HEAD**

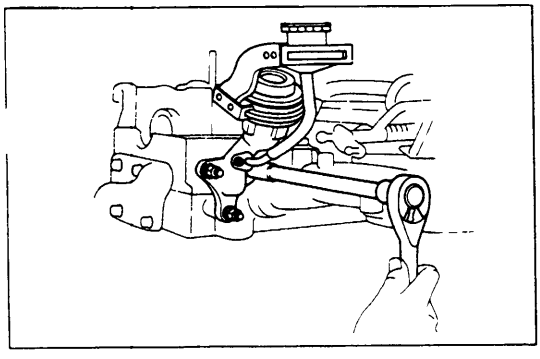

6. **REMOVE EGR PIPE AND EGR VALVE WITH VACUUM MODULATOR (Ex.Calif.)**
   (a) Remove the vacuum hose from the air pipe.
   (b) Disconnect the EGR pipe from the intake manifold.
   (c) Remove the EGR valve with the EGR pipe.
7. **REMOVE INTAKE MANIFOLD WITH CARBURETOR**
   (a) Remove the bond cable from the cylinder head.
   (b) Remove the six bolts and two nuts.
   (c) Remove the intake manifold with the carburetor.

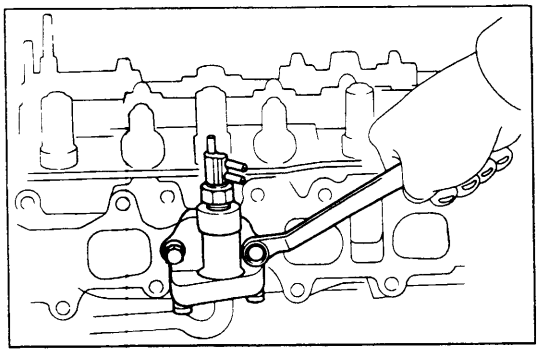

8. **REMOVE THERMOSTATIC VALVE**
9. **REMOVE EXHAUST MANIFOLD FROM CYLINDER HEAD**
10. **MEASURE CAMSHAFT THRUST CLEARANCE**
    (See step 4 on page EM-17)
11. **REMOVE CAM BEARING CAPS AND SHAFT**
    (See step 5 on pagd EM-17)
12. **REMOVE VALVES**
    (See step 6 on page EM-17)

INSPECTION OF CYLINDER HEAD

(See page EM-18)

ASSEMBLY OF CYLINDER HEAD

(See page EM-12)

NOTE:

- Thoroughly clean all parts to be assembled.
- Before installing the parts, apply new engine oil to all sliding and rotating surfaces.
- Replace all gaskets and oil seals with new parts.

1. **INSTALL VALVE (See step 1 on page EM-25)**
2. **INSTALL CAMSHAFT (See step 2 on page EM-26)**

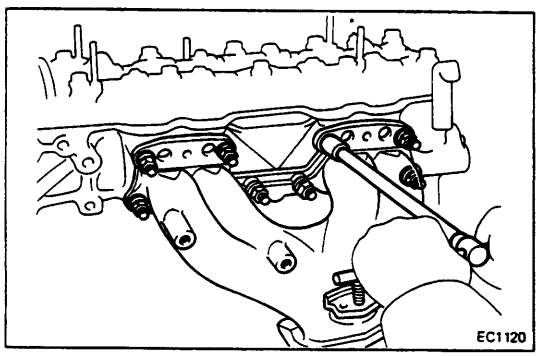

3. **INSTALL EXHAUST MANIFOLD TO CYLINDER HEAD**
   (a) Position a new gasket on the cylinder head.
   (b) Install the exhaust manifold with eight nuts. Torque the nuts.

   Torque: 450 kg-cm (33 ft-lb, 44 N·m)

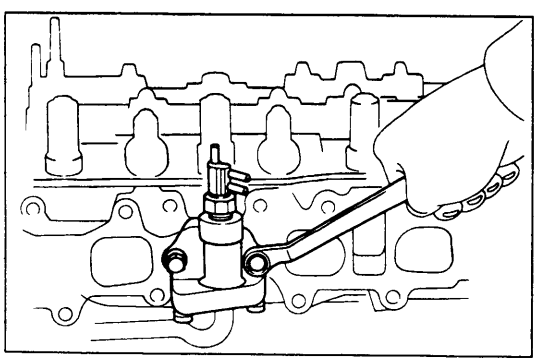

4. **INSTALL THERMOSTATIC VALVE**
   (a) Position a new gasket on the cylinder head.
   (b) Install the thermostatic valve with two bolts. Torque the bolts.

   Torque: 220 kg-cm (16 ft-lb, 22 N·m)

5. **INSTALL INTAKE MANIFOLD WITH CARBURETOR**
   (a) Install the intake manifold with the carburetor.
   (b) Install the six bolts and two nuts. Torque the bolts and nuts.

   Torque: 195 kg-cm (14 ft-lb, 19 N·m)

   (c) Install the bond cable with the bolt.

6. **INSTALL FUEL PIPE TO INTAKE MANIFOLD**
7. **INSTALL EGR PIPE AND EGR VALVE WITH VACUUM MODULATOR (Ex. Calif.)**
   (a) Install the EGR valve with EGR pipe to the intake manifold.
   (b) Connect the vacuum hose to the air pipe.

8. **INSTALL FUEL PUMP TO CYLINDER HEAD**
   (a) Install the fuel pump with the two bolts. Torque the bolts.
   Torque: 220 kg-cm (16 ft-lb, 22 N·m)
   (b) Connect the three fuel pipes.

9. **INSTALL CHECK VALVE WITH AIR PIPE**
   (a) Install the check valve with the air pipe.
   (b) Connect air hose No.3 to the EACV.
   (c) Connect the air pipe to the exhaust manifold.

10. **INSTALL HEAT INSULATER TO EXHAUST MANIFOLD**

INSTALLATION OF CYLINDER HEAD

1. **APPLY SEALER TO CYLINDER BLOCK**
(See step 1 on page EM-26)

2. **INSTALL CYLINDER HEAD**
(See step 2 on page EM-27)

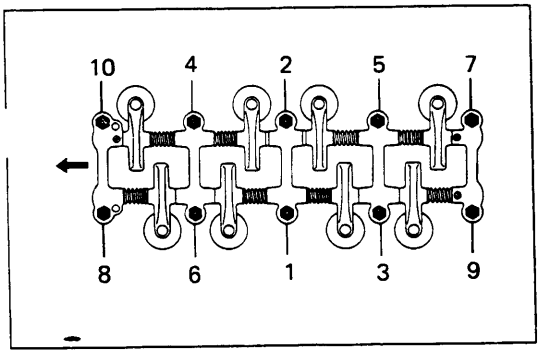

3. **INSTALL ROCKER ARM ASSEMBLY**
(See step 3 on page EM-27)

4. **INSTALL CHAIN COVER BOLT**
(See step 4 on page EM-27)

5. **INSTALL CAM SPROCKET ON CAMSHAFT**
(See step 5 on page EM-27)

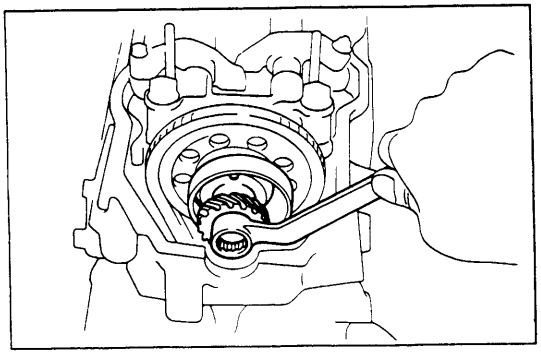

6. **INSTALL DISTRIBUTOR DRIVE GEAR**
(See step 6 on page EM-28)

7. **ADJUST VALVES CLEARANCE**
(See step 7 on page EM-28)

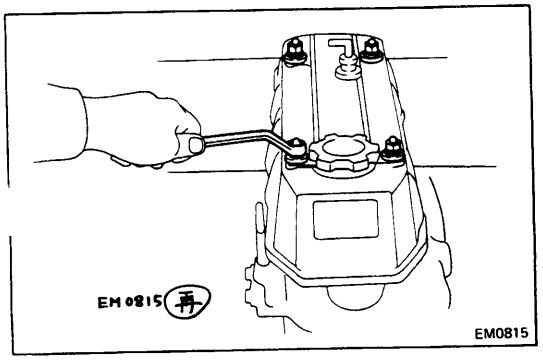

8. **INSTALL HEAD COVER**
(See step 8 on page EM-29)

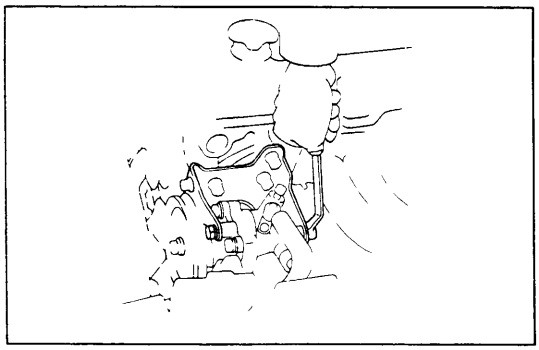

POST INSTALLATION

1. **INSTALL VANE PUMP WITH BRACKET (WITH POWER STEERING)**

   Install the vane pump with the six bolts. Torque the bolts.

   Torque: 450 kg-cm (33 ft-lb, 44 N·m)

2. **INSTALL DRIVE BELT AND ADJUST BELT TENSION (See page MA-17)**

3. **INSTALL DISTRIBUTOR AND SPARK PLUGS**

4. **INSTALL BOND CABLE OF REAR SIDE**

5. **CONNECT FOLLOWING PARTS:**
   (a) Vacuum switch, EBCV (Ex. Calif.) and VSV with the bracket
   (b) HAC to bracket (Ex. Calif.)
   (c) Fuel return hose to the fuel return pipe
   (d) Fuel main hose to the fuel inlet pipe
   (e) Brake booster hose
   (f) Charcoal canister hose

6. **CONNECT FOLLOWING WIRES:**
   (a) EACV wire (for Calif.)
   (b) Fuel cut solenoid valve wire
   (c) Thermo switch wire
   (d) Cold mixture heater wire
   (e) Water temperature sender gauge wire
   (f) VSV wire for EVAP
   (g) Vacuum switch wire
   (h) VSV wire for A/C

7. **CONNECT ACCELERATOR CABLE TO CARBURETOR**

   Connect the cable to the carburetor and bracket.

8. **CONNECT TWO HEATER HOSES**

9. **CONNECT RADIATOR UPPER HOSE TO THERMOSTAT HOUSING**

10. **CONNECT EXHAUST PIPE TO EXHAUST MANIFOLD**

    Connect the exhaust pipe with the three nuts to the exhaust manifold.

11. INSTALL AIR CLEANER

(a) Install the air cleaner on the carburetor.

(b) Connect the air hoses and air duct.

12. FILL WITH ENGINE OIL

Fill the engine with new oil, API grade SF or SF/CC multi-grade, fuel efficient and recommended viscosity oil.

Capacity:

Dry fill	**4.8 liters (5.1 US qts, 4.2 Imp. qts)**
Drain and refill	
w/o Oil filter change	**4.0 liters (4.2 US qts, 3.5 Imp. qts)**
w/ Oil filter change	**4.6 liters (4.9 US qts, 4.0 Imp. qts)**

13. FILL WITH COOLANT

Close the radiator and engine drain cocks and fill with coolant.

Total capacity: w/Heater 8.4 liters (8.9 US qts, 7.4 Imp. qts)

14. CONNECT CABLE TO NEGATIVE TERMINAL OF BATTERY

15. START ENGINE

Warm up the engine and inspect for leaks.

16. PERFORM ENGINE ADJUSTMENT

(a) Retighten the cylinder head bolts.
(See step 3 on page EM-27)

(b) Readjust the valve clearance.
(See page MA-13)

(c) Recheck ignition timing. (See step 1 on page IG-10)

(d) Adjust idle speed. (See step 14 on page MA-14)

17. RECHECK COOLANT AND ENGINE OIL LEVEL

18. ROAD TEST

Perform a road test.

TIMING CHAIN

COMPONENTS

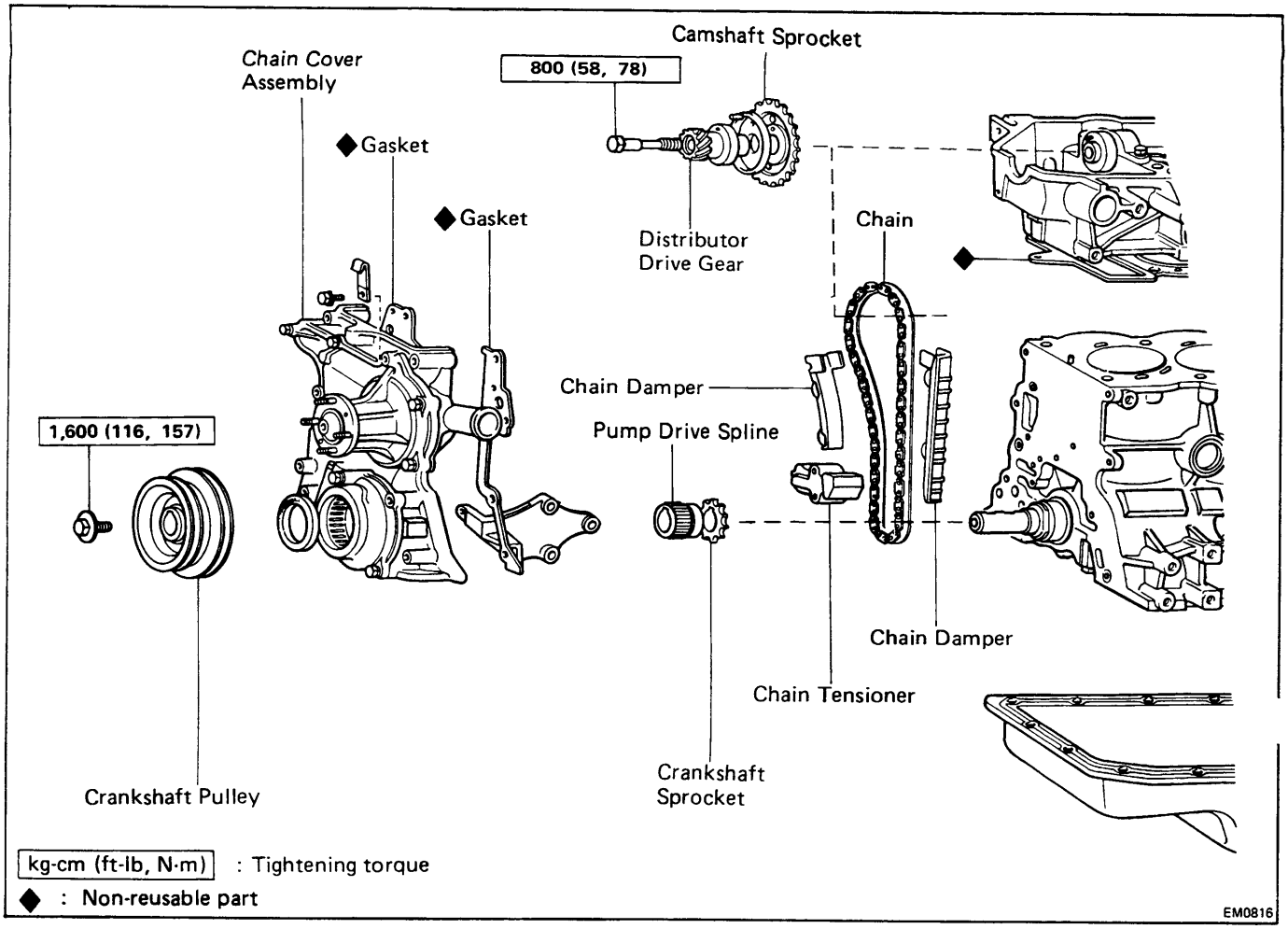

PREPARATION OF REMOVAL

1. **REMOVE CYLINDER HEAD**
   (22R-E See page EM-13)
   (22R See page EM-33)

2. **REMOVE RADIATOR**
   (See page CO-6)

3. **REMOVE OIL PAN (ON VEHICLE)**
   (a) Remove the engine undercover.
   (b) Remove the engine mounting bolts.
   (c) Place a jack under the transmission and raise the engine about 25 mm (0.98 in.).
   (d) Remove the fifteen bolts, three nuts, oil pan.

REMOVAL OF TIMING CHAIN

1. **REMOVE DRIVE BELTS**
   (a) Loosen the belt adjusting bolt and pivot bolt of the alternator.
   (b) Remove the two belts.

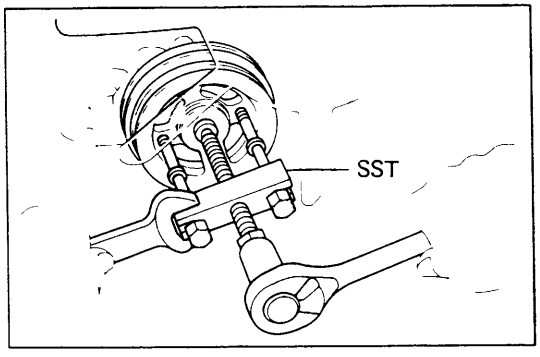

2. **REMOVE CRANKSHAFT PULLEY**
   (a) Remove the pulley center bolt.
   (b) Using SST, remove the pulley.
   SST 09213-31021
   NOTE: If the front seal is to be replaced, see page LU-5.

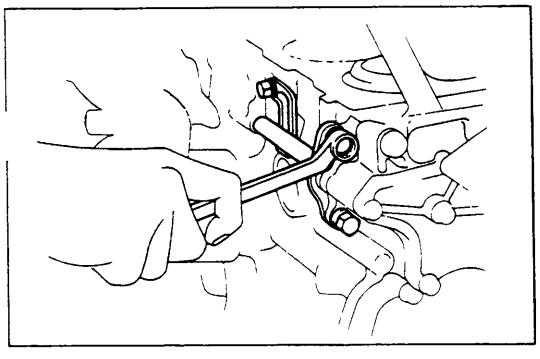

3. **REMOVE WATER BY-PASS TUBE**
   Remove the three bolts.

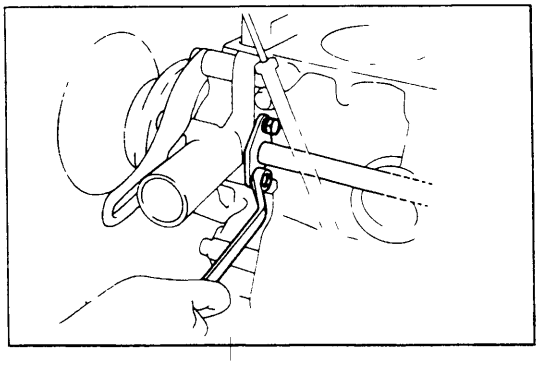

4. **REMOVE HEATER TUBE**
   Remove the two bolts.

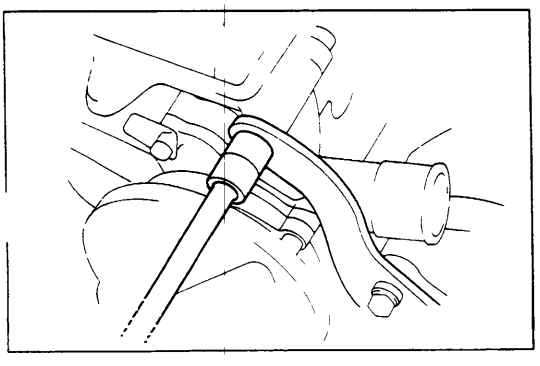

5. **REMOVE BOLT HOLDING ALTERNATOR ADJUSTER BRACKET**
   Remove the bolt holding the alternator adjuster bracket to the chain cover. Move the bracket toward the alternator.

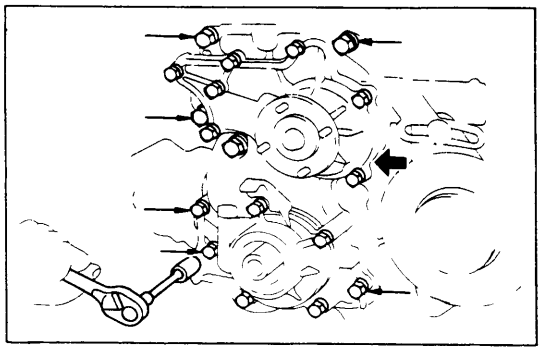

6. REMOVE CHAIN COVER ASSEMBLY

(a) Remove six timing chain cover bolts shown by the arrows.

(b) Using a plastic faced hammer, loosen the chain cover and remove it.

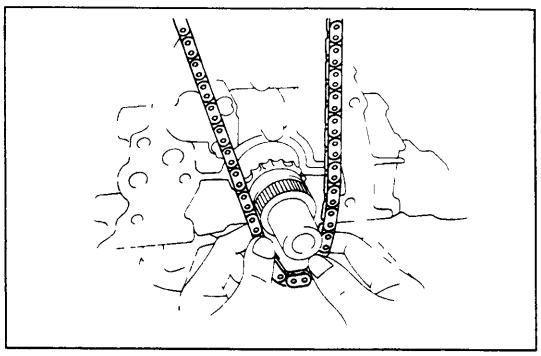

7. REMOVE CHAIN AND CAMSHAFT SPROCKET

(a) Remove the chain from the damper.

(b) Remove the cam sprocket and chain together.

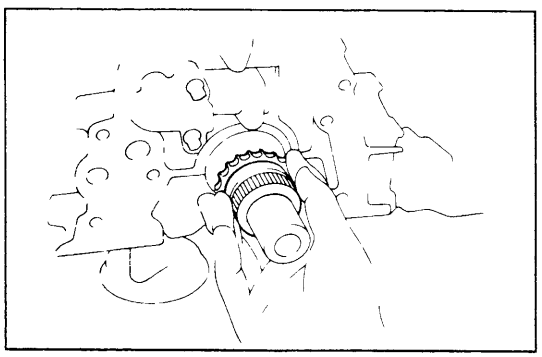

8. REMOVE PUMP DRIVE SPLINE AND CRANKSHAFT SPROCKET

If the pump drive and sprocket cannot be removed by hand, use SST to remove them together.

SST 09213-36020

9. REMOVE GASKET MATERIAL ON CYLINDER BLOCK

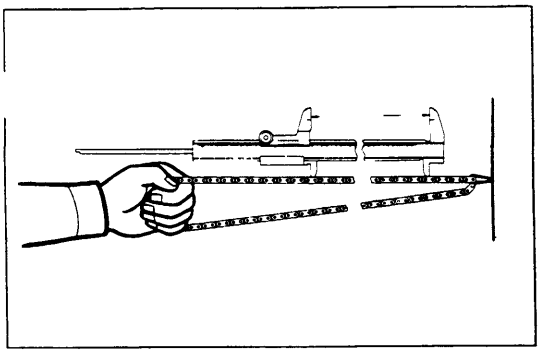

INSPECTION OF COMPONENTS

1. MEASURE CHAIN AND SPROCKET WEAR

(a) Measure the length of 17 links with the chain fully stretched.

(b) Make the same measurements at least three other places selected at random.

If over the limit at any one place, replace the chain.

Chain elongation limit at 17 links: 147.0 mm (5.787 in.)

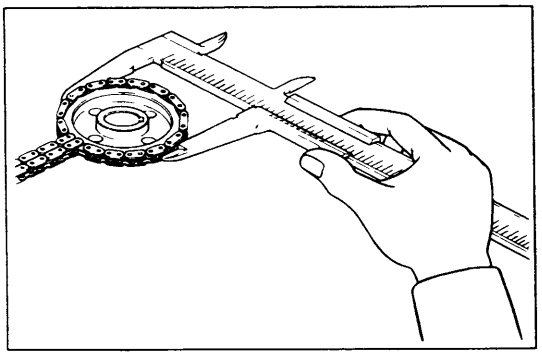

(c) Wrap the chain around the sprocket.

(d) Using a vernier caliper, measure the outer sides of the chain rollers as shown. Measure both sprockets.

If the measurement is less than the minimum, replace the chain and two sprockets.

Crankshaft sprocket minimum: 59.4 mm (2.339 in.)
Camshaft sprocket minimum: 113.8 mm (4.480 in.)

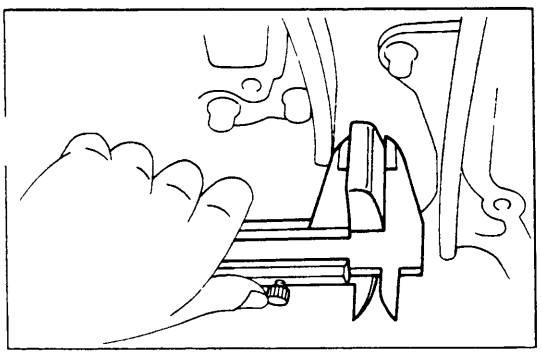

2. MEASURE CHAIN TENSIONER

Using a vernier caliper, measure the tensioner as shown.

If the tensioner is worn or less than the minimum, replace the chain tensioner.

Tensioner minimum: 11.0 mm (0.433 in.)

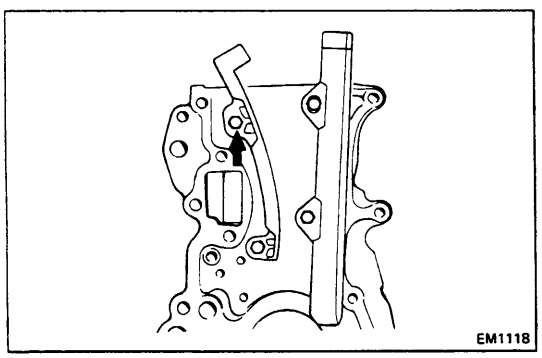

3. MEASURE CHAIN DAMPERS

(a) Using a micrometer, measure each damper.

Damper wear limit: 0.5 mm (0.020 in.)

If either damper is worn or less than the minimum, replace the damper as follows:

(b) Tighten down the new damper bolts as shown.

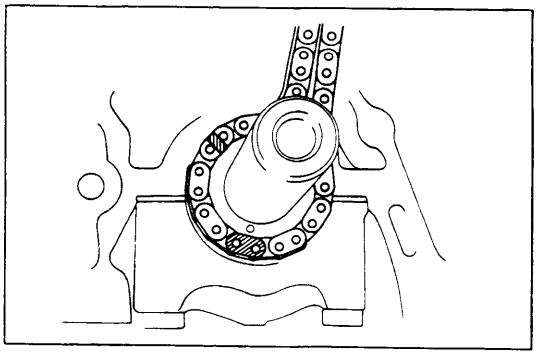

INSTALLATION OF TIMING CHAIN

(See page EM-40)

1. INSTALL CRANKSHAFT SPROCKET AND CHAIN

(a) Turn the crankshaft until the shaft key is on top.

(b) Slide the sprocket over the key on the crankshaft.

(c) Place the timing chain on the sprocket with the single bright link aligned with the timing mark on the sprocket.

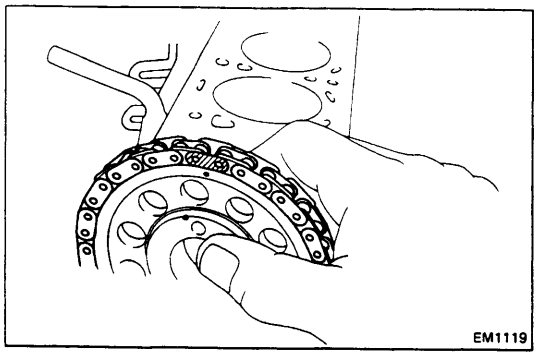

2. PLACE CHAIN ON CAMSHAFT SPROCKET

(a) Place the timing chain on the sprocket so that the timing mark is bright chain links.

(b) Make sure the chain is positioned between the two dampers.

(c) Turn the camshaft sprocket counterclockwise to take the slack out of the chain.

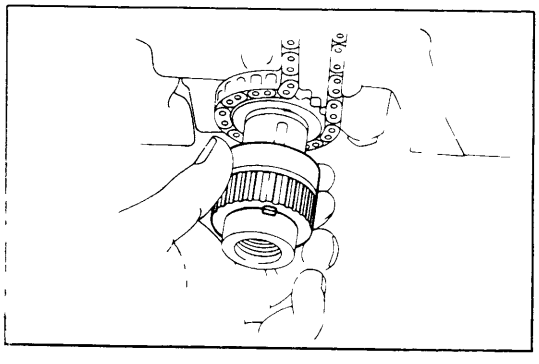

3. INSTALL OIL PUMP DRIVE SPLINE

Slide the oil pump drive spline over the crankshaft key.

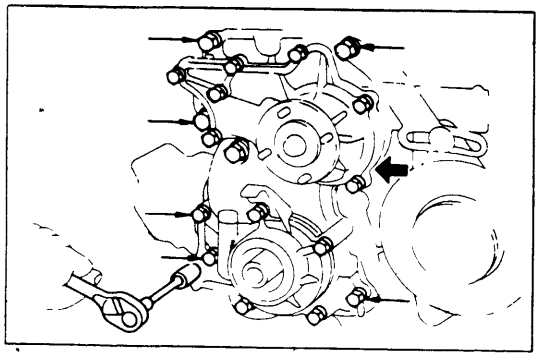

4. INSTALL TIMING CHAIN COVER ASSEMBLY

(a) Remove the old cover gaskets. Clean the gasket surface. Install new gaskets over the dowels.

(b) Slide the cover assembly over the dowels and pump spline.

(c) Insert the bolts as shown and torque them.

Torque:

8 mm bolt 130 kg-cm (9 ft-lb, 13 N·m)
10 mm bolt 400 kg-cm (29 ft-lb, 39 N·m)

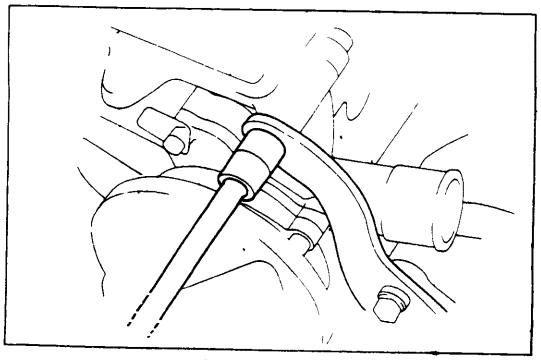

5. INSTALL BOLT HOLDING ALTERNATOR ADJUSTER BRACKET

Install the bolt holding the alternator adjuster bracket to the chain cover.

Torque the bolt.

Torque: 130 kg-cm (9 ft-lb, 13 N·m)

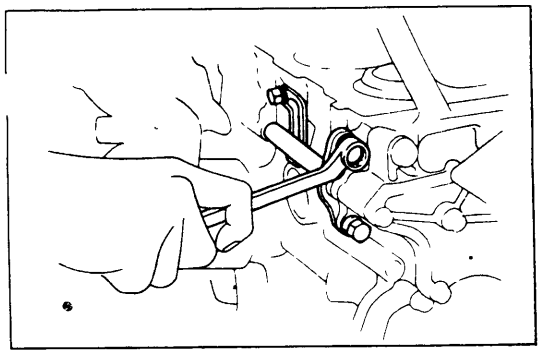

6. INSTALL WATER BY-PASS TUBE TO CHAIN COVER

Install the three bolts.

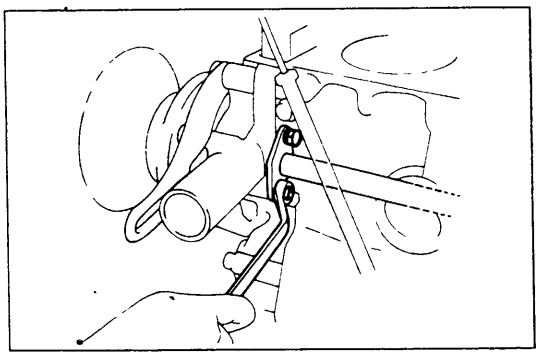

7. INSTALL HEATER TUBE TO CHAIN COVER

Install the two bolts.

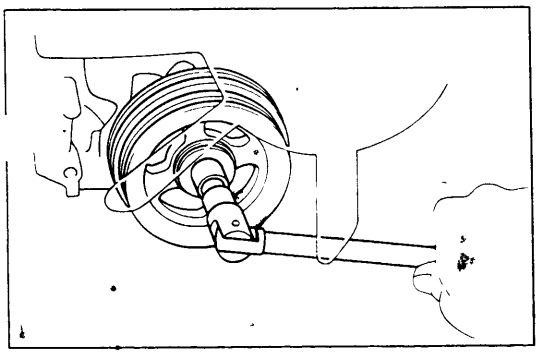

8. INSTALL CRANKSHAFT PULLEY

(a) Install the pulley over the crankshaft key.

CAUTION: Do not turn the crankshaft.

(b) Torque the pulley center bolt.

Torque: 1,600 kg-cm (116 ft-lb, 157 N·m)

9. INSTALL DRIVE BELTS

Using a belt tension gauge, check the drive belt tension.

Belt tension gauge:

Nippondenso BTG-20 (95506-00020) or
Borroughs No. BT-33-73F

Drive belt tension: New belt 125 ± 25 lb
Used belt 80 ± 20 lb

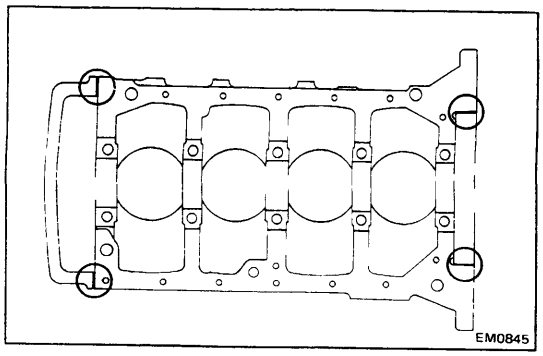

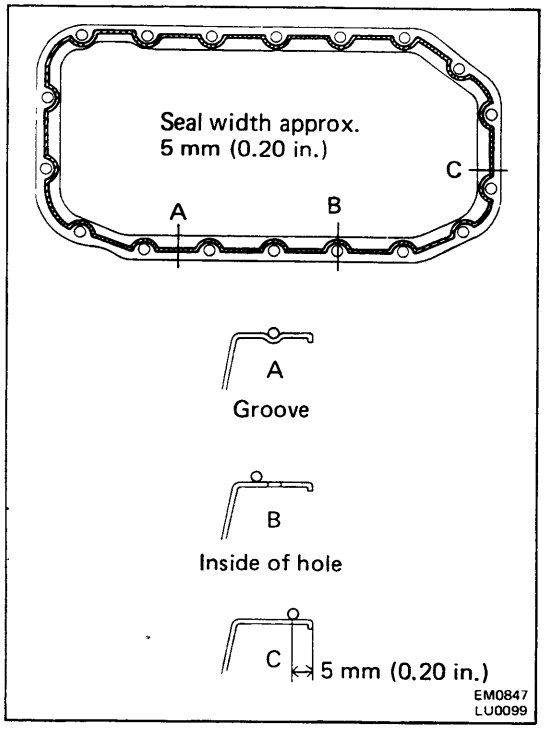

10. INSTALL OIL PAN

(a) Remove any old packing material and be careful no to drop any oil on the contacting surfaces of the pan and cylinder block.

- Using a razor blade and gasket scraper, remove all the packing (FIPG) material from the gasket surfaces.
- Thoroughly clean all components to remove all the loose material.
- Clean both sealing surfaces with a non-residue solvent.

CAUTION: Do not use a solvent which will affect the painted surfaces.

(b) Apply liquid sealer to the joint part of the cylinder block and chain cover, cylinder block and rear oil seal retainer.

(c) Apply No. 102 seal packing (Part No. 08826-00080 or equivalent to the oil pan as shown in the figure.

- Install a nozzle that has been cut to a 5-mm (0.20 in.) opening.

NOTE: Avoid applying an excess amount to the surface. Be especially careful near oil passages.

- Parts must be assembled within 5 minutes of application. Otherwise, the material must be removed and re-applied.
- Immediately remove nozzle from tube and reinstall cap.

(d) Install the oil pan over the studs on the block with sixteen bolts and two nuts. Torque the bolts and nuts.

Torque: 130 kg-cm (9 ft-lb, 13 N·m)

(e) Lower the engine and install the engine mounting bolts.

(f) Intall the engine under cover.

POST INSTALLATION

11. INSTALL RADIATOR (See page CO-12)

12. INSTALL CYLINDER HEAD
(22R-E See page EM-25)
(22R See page EM-36)

22R-E
CYLINDER BLOCK

PREPARATION FOR REMOVAL

1. **DISCONNECT CABLE FROM NEGATIVE TERMINAL OF BATTERY**
2. **REMOVE ENGINE UNDER COVER**
3. **REMOVE ENGINE HOOD**
   Disconnect the washer hose from the hood.
4. **DRAIN COOLANT FROM RADIATOR AND CYLINDER BLOCK**
5. **DRAIN AUTOMATIC TRANSMISSION FLUID (with A/T)**
6. **REMOVE AIR CLEANER HOSE AND AIR CLEANER**
7. **REMOVE COUPLING FAN WITH FAN**
8. **REMOVE TWO HEATER HOSES**
9. **REMOVE RADIATOR WITH SHROUD**
   (a) Disconnect the two cooler hoses. (with A/T)
   (b) Disconnect the radiator upper and lower hoses from the engine.
   (c) Disconnect the reservoir hose.
   (d) Remove the radiator with the shroud.

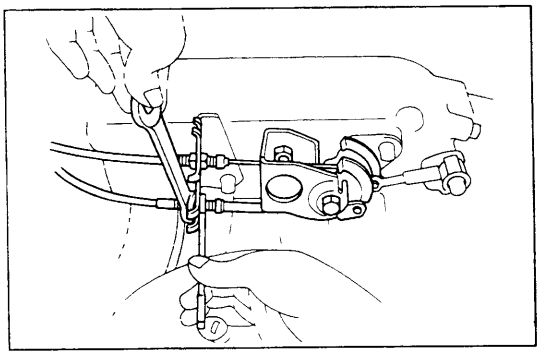

10. **DISCONNECT CABLES FROM BRACKET**
    Disconnect the accelerator cable and throttle cable for A/T from the bracket.
11. **DISCONNECT FOLLOWING PARTS:**
    (a) PCV hose No.1 and No.2
    (b) Brake booster hose
    (c) Air control valve hoses
    (d) EVAP hose (from canister)
    (e) Actuater hose (with cruise control)
    (f) EGR vacuum modulator hose
    (g) Air valve hose No.1 from the throttle body
    (h) Air valve hose No.2 from the chamber
    (i) Water by-pass hose No.2 and No.3 from the throttle body
    (j) Air control valve hose for the actuator
    (k) Pressure regulator hose from the chamber
    (l) Cold start injection pipe
    (m) BVSV hoses

12. DISCONNECT FOLLOWING WIRES:

(a) Cold start injection wire

(b) Throttle position sensor wire

(c) Air valve wire

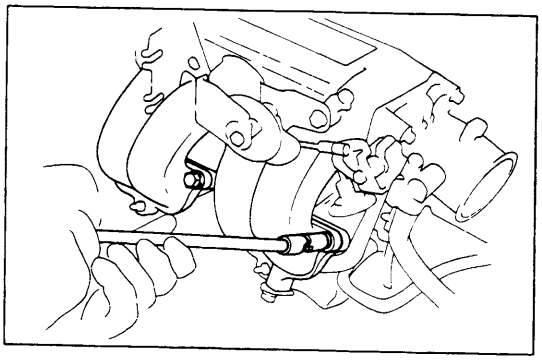

13. REMOVE CHAMBER WITH THROTTLE BODY

(a) Remove the two bolts holding the EGR valve to the chamber.

(b) Disconnect the chamber from the stay.

(c) Remove the bolts and nuts holding the chamber to the intake manifold.

(d) Remove the chamber with the throttle body.

14. DISCONNECT FOLLOWING WIRES:

(a) Cold start injector time switch wire

(b) Water thermo sensor wire

(c) OD thermo switch wire (with A/T)

(d) Injector wires

(e) Thermo sensor wire

(f) Vacuum switch wire

(g) Oil pressure switch wire

(h) Starter wire

REMOVAL OF CYLINDER BLOCK

1. **DISCONNECT FOLLOWING PARTS:**
   (a) Alternator wires
   (b) High-tension cord for ignition coil
   (c) Distributor wire from igniter
   (d) Ox sensor wire

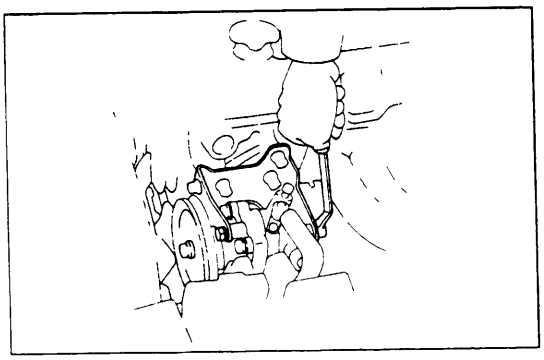

2. **IF VEHICLE HAS POWER STEERING, REMOVE VANE PUMP FROM BRACKET**
   (a) Remove the drive belt.
   (b) Remove the four bolts.
   (c) Remove the vane pump.
   NOTE: Lay the vane pump to one side without disconnecting the hoses.

3. **DISCONNECT BOND CABLE FROM VANE PUMP BRACKET**

4. **REMOVE COMPRESSOR FROM BRACKET (with A/C)**
   (a) Loosen the drive belt adjusting bolt and remove the drive belt.
   (b) Remove the compressor on the front side without disconnecting the hoses.

5. **DISCONNECT BOND CABLES FROM ENGINE REAR SIDE AND RH SIDE**

6. **REMOVE SHIFT LEVER FROM INSIDE OF VEHICLE (with M/T)**

7. **RAISE VEHICLE**
   CAUTION: Be sure the vehicle is securely supported.

8. **REMOVE EXHAUST PIPE**
   (a) Disconnect the exhaust pipe from the exhaust manifold.
   (b) Remove the exhaust pipe clamp from the clutch housing.
   (c) Remove the exhaust pipe from the catalytic converter.

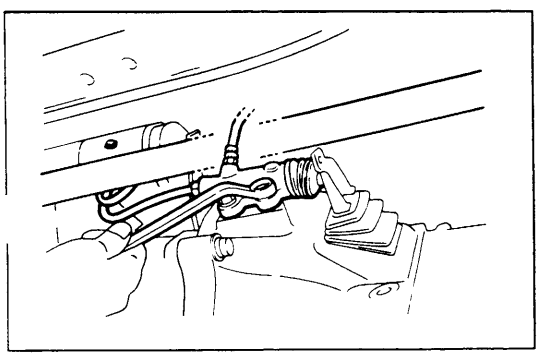

9. **REMOVE CLUTCH RELEASE CYLINDER WITH BRACKET FROM TRANSMISSION (with M/T)**

10. **REMOVE ENGINE MOUNTING BOLTS ON EACH SIDE OF ENGINE**

11. DISCONNECT FOLLOWING PARTS:

(a) Oil pressure sender gauge wire

(b) Neutral start switch wire (with A/T)

(c) Back-up light switch wire

(d) Fuel hose

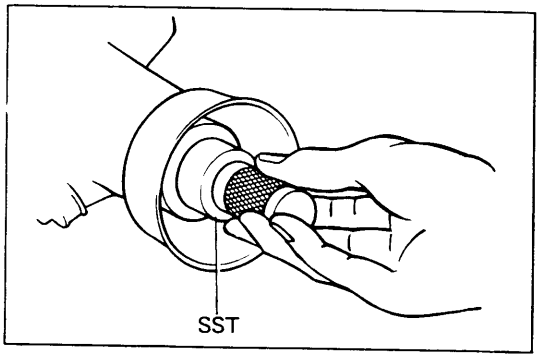

12. REMOVE INTERMEDIATE SHAFT

(a) Put alignment marks on the flanges.

(b) Remove the four bolts and nuts.

(c) Remove the two bolts holding the center support bearing to the body.

(d) Pull the sleeve yoke from the transmission.

(e) Insert SST in the transmission to prevent oil leakage.

SST 09325-20010

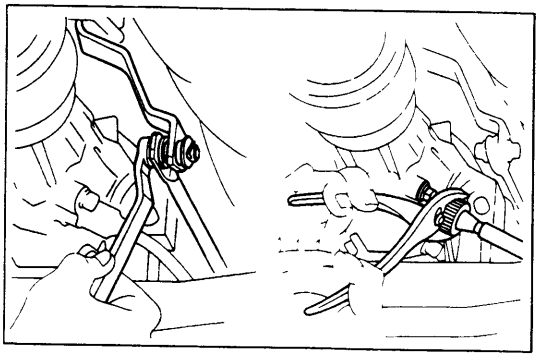

13. DISCONNECT SHIFT LINKAGE FROM SHIFT LEVER (with A/T)

14. DISCONNECT SPEEDOMETER CABLE

CAUTION: Do not lose the felt dust protector and washers.

15. PLACE JACK UNDER TRANSMISSION

Be sure to put a wooden block between the jack and the transmission pan.

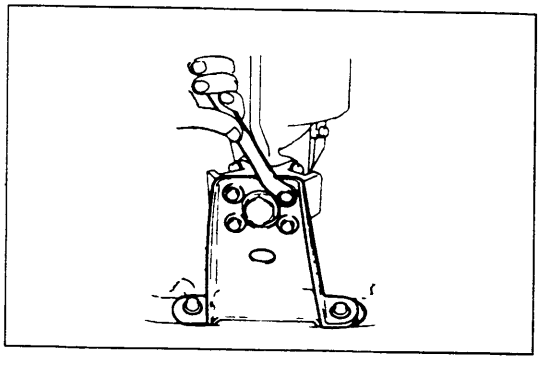

16. REMOVE ENGINE REAR MOUNTING BRACKET

(a) Remove the four bolts holding the bracket to the member.

(b) Remove the four bolts holding the bracket to the transmission and remove the bracket.

17. REMOVE ENGINE WITH TRANSMISSION FROM VEHICLE

(a) Attach the engine hoist chain to the lift brackets of the engine.

(b) Lift the engine out of the vehicle slowly and carefully.

NOTE: Make sure the engine is clear of all wiring and hoses.

18. REMOVE TRANSMISSION FROM ENGINE

(a) Remove the starter.

(b) Remove the two stiffener plates and exhaust pipe bracket from engine.

(c) Remove the transmission from the engine.

COMPONENTS

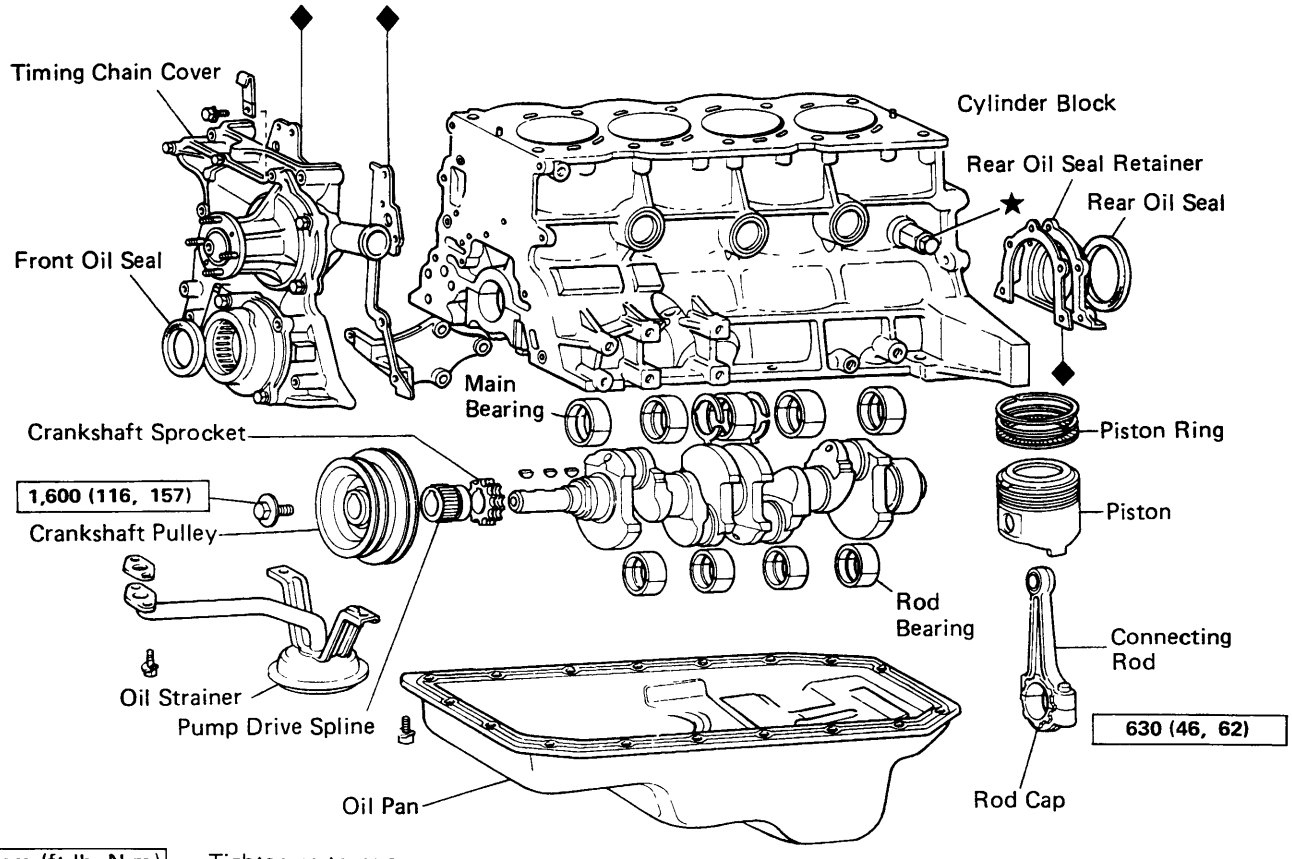

PREPARATION FOR DISASSEMBLY

1. **REMOVE CLUTCH COVER AND DISC FOR M/T (See page CL-7)**
2. **REMOVE FLYWHEEL OR DRIVE PLATE AND REAR END PLATE**
3. **INSTALL ENGINE STAND FOR DISASSEMBLY**
4. **REMOVE CYLINDER HEAD (See page EM-15)**
5. **REMOVE OIL PAN**

   Remove the sixteen bolts and two nuts, and then remove the oil pan and gasket.
6. **REMOVE TIMING CHAIN (See page EM-41)**
7. **REMOVE ALTERNATOR (See page CH-6)**

DISASSEMBLY OF CYLINDER BLOCK

1. REMOVE OIL STRAINER

Remove the four bolts holding the oil strainer.

2. REMOVE REAR OIL SEAL RETAINER

Remove the five bolts, rear oil seal retainer and gasket.

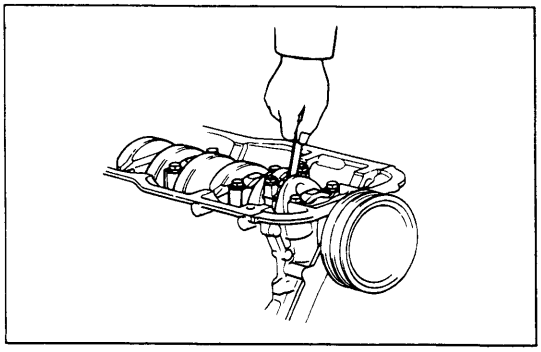

3. MEASURE CONNECTING ROD THRUST CLEARANCE

Using a feeler gauge, measure the rod thrust clearance.

If clearance is greater than the maximum, replace the connecting rod.

Rod thrust maximum clearance: 0.30 mm (0.0118 in.)

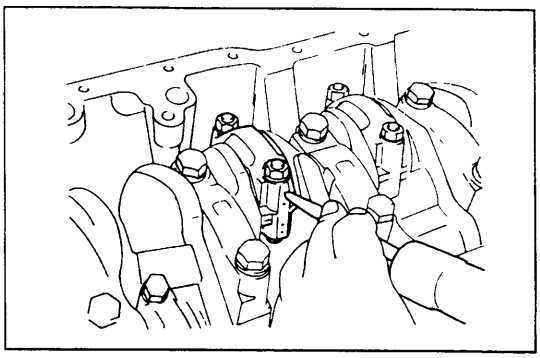

4. REMOVE CONNECTING ROD CAPS AND MEASURE OIL CLEARANCE

(a) Using a punch or numbering stamp, mark the connecting rods and caps to ensure correct reassemb'

(b) Remove the rod caps.

Remove the rod cap nuts. Using a plastic hammer, tap the rod bolts lightly and lift off the rod caps. Keep the bearing inserted with the cap.

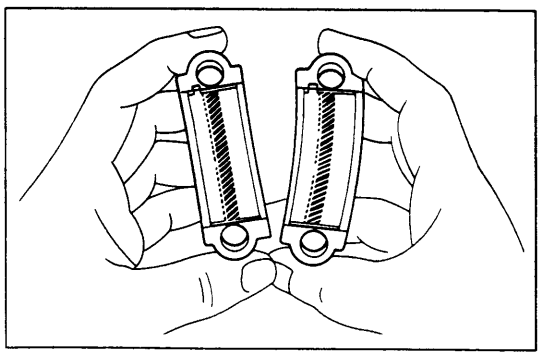

(c) Clean the bearings and crankshaft pins.

(d) Inspect each bearing for pitting and radial scratches.

If bearings are damaged, replace them.

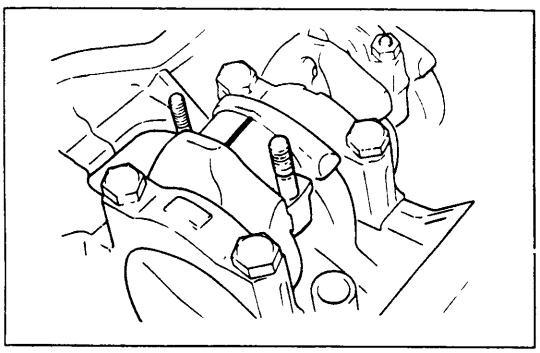

(e) Lay a strip of Plastigage across the crankshaft pin.

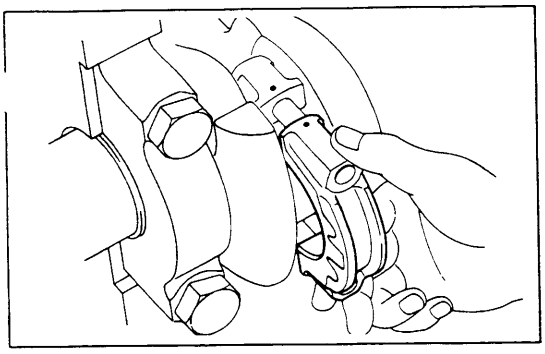

(f) Align the rod and cap marks and fit on the cap. Torque the rod cap nuts.

Torque: 630 kg-cm (46 ft-lb, 62 N·m)

NOTE: Do not turn the crankshaft.

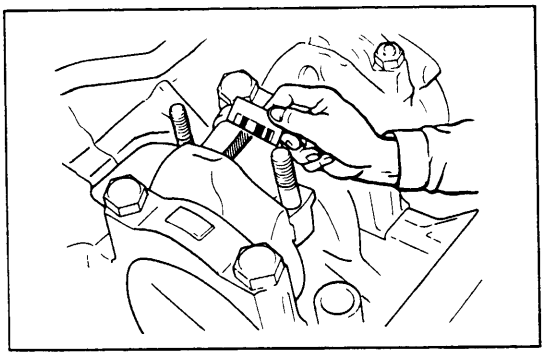

(g) Remove the rod cap.

(h) Measure the plastigage at its widest point.

If the clearance is greater than the maximum, replace the bearings and/or grind the crank pins.

Maximum clearance: 0.10 mm (0.0039 in.)
Standard clearance: 0.025 — 0.055 mm (0.0010 — 0.0022 in.)

(i) Clean out the pieces of plastigage from the bearings and journals.

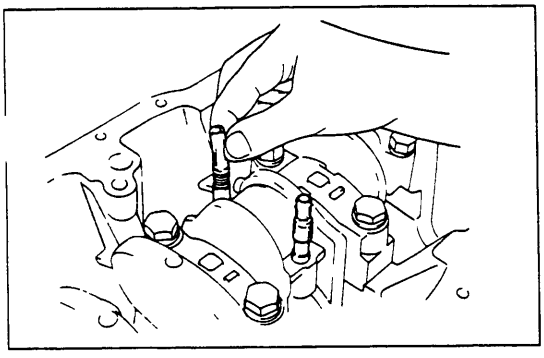

5. PUSH OUT PISTON AND CONNECTING ROD ASSEMBLY

(a) Remove all carbon from the top of the cylinders.

(b) Cover the rod bolts with a short piece of hose to protect the crankshaft from damage.

(c) Push the piston and connecting rod assembly out through the top of the cylinder block.

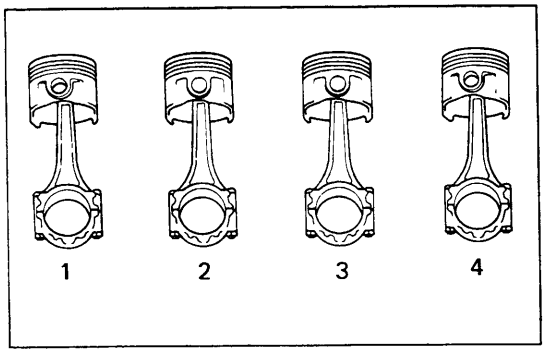

(d) Arrange the piston and connecting rod caps in order.

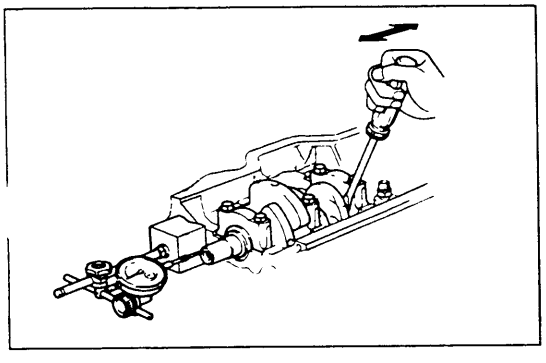

6. MEASURE CRANKSHAFT THRUST CLEARANCE

Using a dial indicator, measure the clearance at the center bearing. If it exceeds the maximum clearance, replace the thrust washer as a set.

Maximum clearance: 0.30 mm (0.0118 in.)
Standard clearance: 0.02 — 0.22 mm (0.0008 — 0.0087 in.)

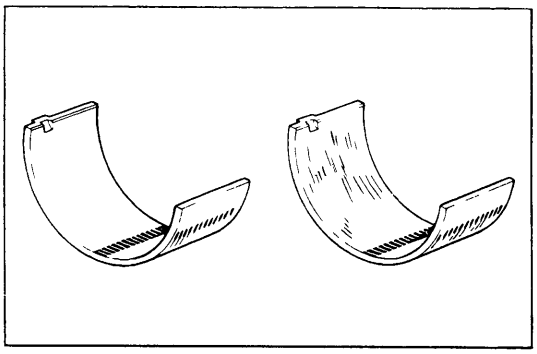

7. REMOVE MAIN BEARING CAPS AND MEASURE OIL CLEARANCE

(a) Remove the main bearing caps by removing two bc

(b) Lift out the crankshaft and remove the upper main bearings from the cylinder block.

(c) Clean the bearing and main journals.

Inspect each bearing for pitting and radial scratches.

If bearings are damaged, replace them.

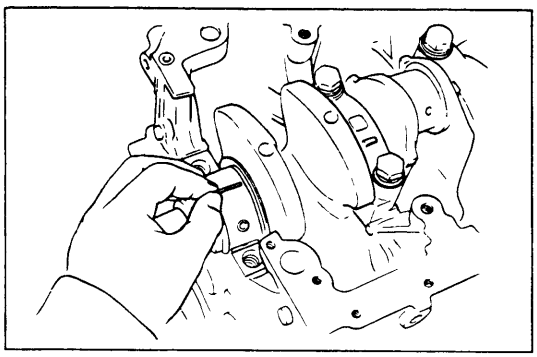

(d) Install the upper main bearings on the cylinder block and crankshaft.

(e) Lay a strip of plastigage across the main journals.

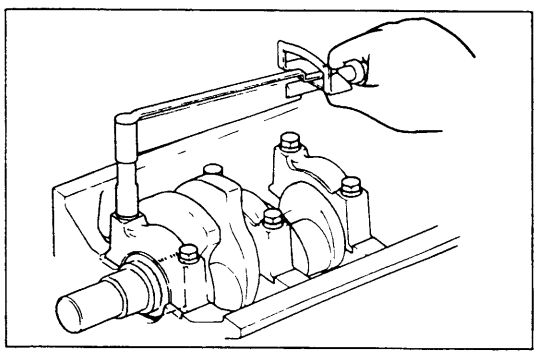

(f) Install the main bearing caps. Torque the cap bolts.

Torque: 1,050 kg-cm (76 ft-lb, 103 N·m)

NOTE: Do not turn the crankshaft.

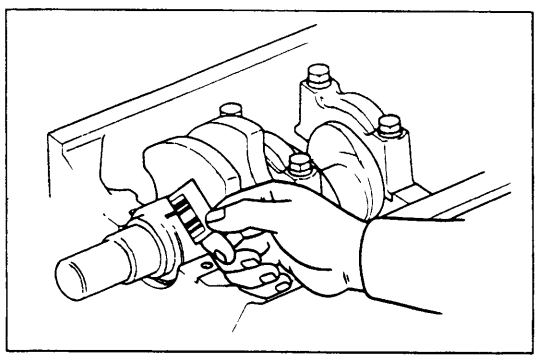

(g) Remove the main bearing caps.

(h) Measure the plastigage at its widest point.

If the clearance is greater than the maximum, replace the bearings and/or grind the main journals.

Maximum clearance: 0.08 mm (0.0031 in.)
Standard clearance: 0.025 — 0.055 mm (0.0010 — 0.0022 in.)

(i) Clean out the pieces of plastigage from the bearings and journals.

8. REMOVE CRANKSHAFT

(a) Lift out the crankshaft.

(b) Remove the upper main bearings from the cylinder block.

(c) Arrange the caps and bearings in order.

INSPECTION OF CYLINDER BLOCK

1. REMOVE GASKET MATERIAL

Using a gasket scraper, remove all gasket material from cylinder block surfaces.

2. CLEAN CYLINDER BLOCK

Using a soft brush and solvent, clean the block.

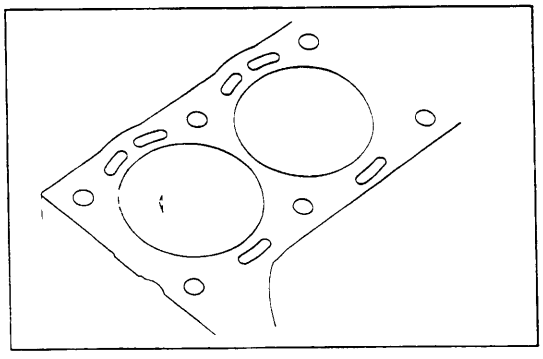

3. INSPECT CYLINDERS

Visually inspect cylinders for vertical scratches. If deep scratches are present, rebore all four cylinders.

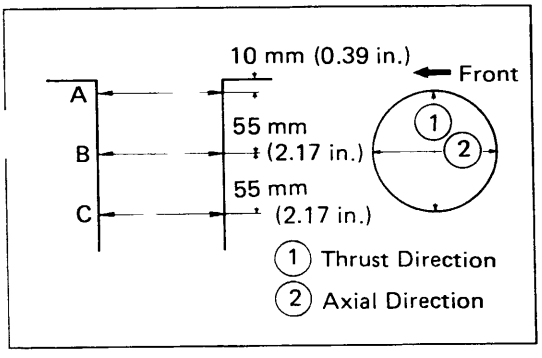

4. MEASURE CYLINDER BORE

Using a cylinder micrometer, measure the cylinder bore at positions A, B and C in the thrust and axial directions. If any of the following measurements is not within specifications rebore all four cylinders.

(a) Cylinder diameter greater than maximum.

Standard size piston
Maximum diameter: 92.03 mm (3.6232 in.)
Oversized piston (O/S 0.50)
Maximum diameter: 92.53 mm (3.6429 in.)
Oversized piston (O/S 1.00)
Maximum diameter: 93.03 mm (3.6626 in.)

(b) Difference between measurements A, B and C is greater than the taper limit.

Taper limit: 0.01 mm (0.0004 in.)

(c) Difference between the thrust and axial measurements is greater than the out-of-round limit.

Out-of-round limit: 0.02 mm (0.0008 in.)

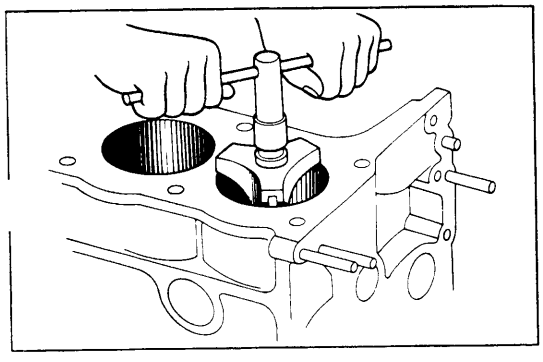

5. REMOVE CYLINDER RIDGE

If wear is less than 0.2 mm (0.008 in.), use a ridge reamer to machine the top of the cylinders.

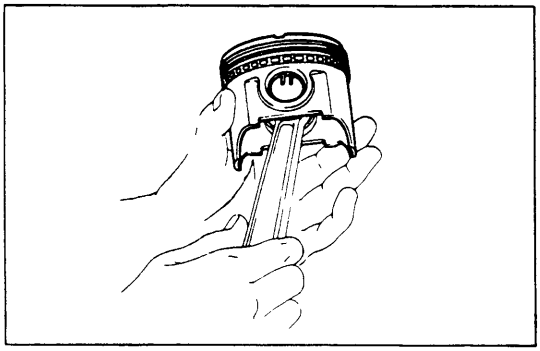

DISASSEMBLY OF PISTON AND CONNECTING ROD ASSEMBLY

1. CHECK FIT BETWEEN PISTON AND PIN

Try to move the piston back and forth on the piston pin. If any movement is felt, replace the piston and pin.

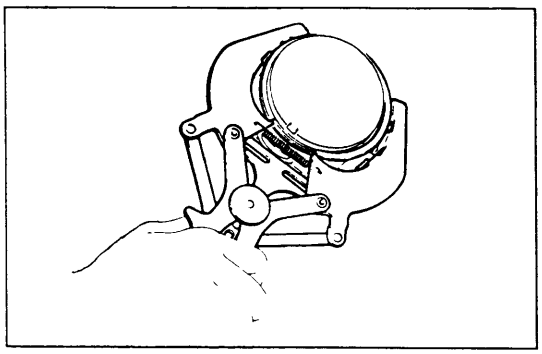

2. REMOVE PISTON RINGS

Using a piston ring expander, remove the piston rings. Keep the rings for each cylinder separated.

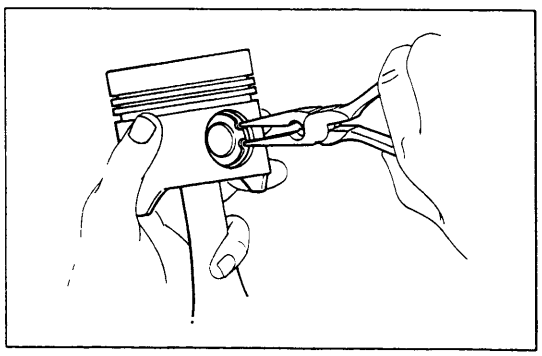

3. DISCONNECT CONNECTING ROD FROM PISTON

(a) Using needle-nose pliers, remove the snap rings from the piston.

(b) Heat the piston in hot water to about 80°C (176°

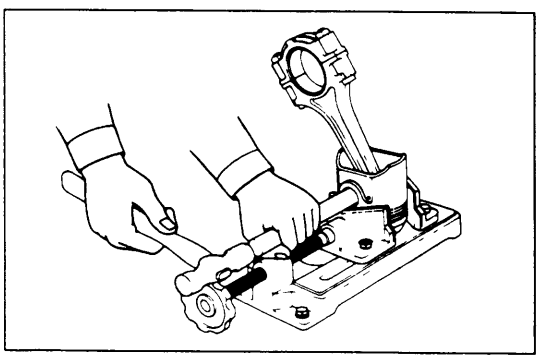

(c) Using a hammer and driver, tap the pin lightly to remove the pin from the piston.

NOTE:

- The piston and pin are a matched set.
- Keep the piston, piston pin and rings and connecting rod together for each cylinder.

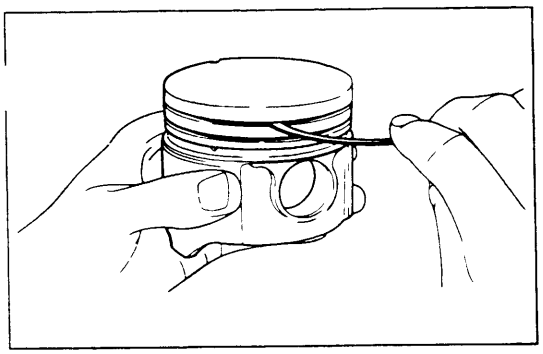

INSPECTION OF PISTON AND CONNECTING ROD ASSEMBLY

1. CLEAN PISTON

(a) Scrape off carbon from the piston top.

(b) Using a groove cleaning tool or broken ring, clean the ring grooves.

(c) Using solvent and a brush,clean the piston thoroughly.

CAUTION: Do not use a wire brush.

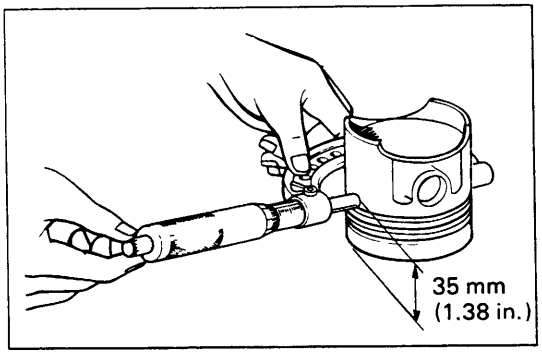

2. MEASURE PISTON DIAMETER

(a) Using a micrometer, measure the piston diameter as shown.

Standard diameter: 91.960 — 91.990 mm (3.6205 — 3.6216 in.)

(b) Check that the difference between the cylinder diameter and the piston diameter is within specification.

If not within specification, replace the piston and/or rebore the cylinder.

Piston clearance: 0.02 — 0.04 mm (0.0008 — 0.0016 in.)

3. MEASURE CLEARANCE BETWEEN PISTON GROOVE AND PISTON RING

Using a feeler gauge, measure the clearance between the piston ring and the ring land.

If the clearance is greater than the maximum, replace the piston.

Maximum clearance between compression ring No.1 or 2 and ring land: 0.2 mm (0.008 in.)

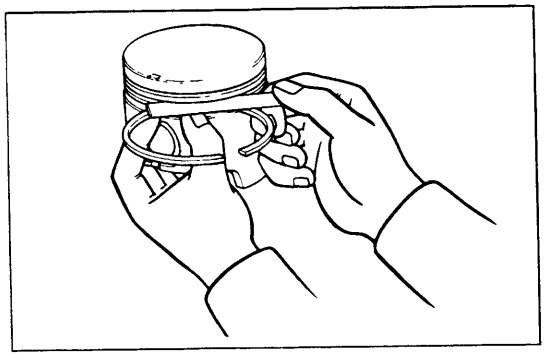

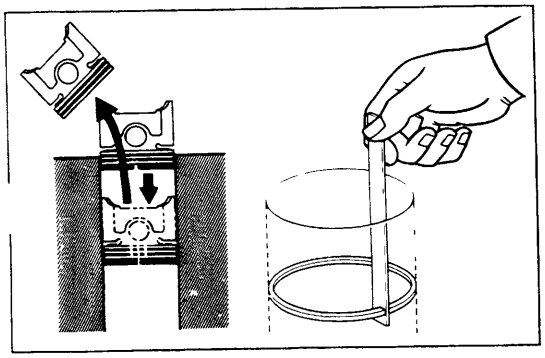

4. MEASURE RING END GAP

Measure the ring end gap.

(a) Insert the piston ring into the cylinder.

(b) Using a piston, push the ring to the bottom of the ring travel.

(c) Using a feeler gauge, measure the end gap.

If not within specification, replace the ring. Do not file the ring end.

Ring end gap:

Standard	No.1	0.24—0.39 mm (0.009—0.015 in.)
	No.2	0.18—0.42 mm (0.007—0.017 in.)
	Oil	0.20—0.82 mm (0.008—0.032 in.)
Maximum	No.1	0.99 mm (0.039 in.)
	No.2	1.02 mm (0.040 in.)
	Oil	1.42 mm (0.056 in.)

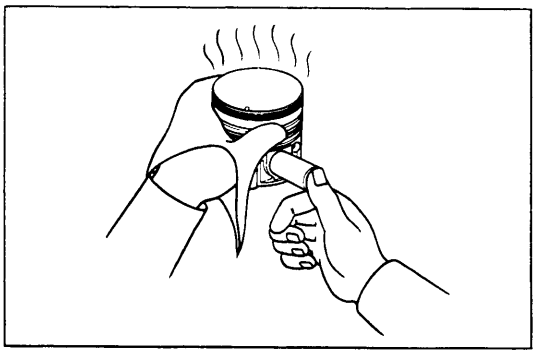

5. INSPECT PISTON PIN FIT

At 80°C (176°F), you should be able to push the pin into the piston with your thumb.

If the pin can be installed at a lower temperature, replace it and the piston.

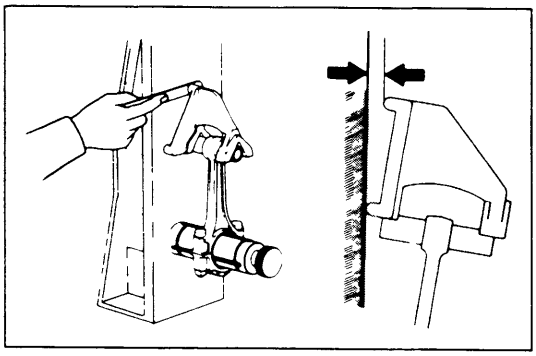

6. INSPECT CONNECTING RODS

(a) Using a rod aligner, check the connecting rod alignment.

If the rod is bent or twisted, replace the connecting rod.

- Check that the rod is not bent.

Bend limit: **0.05 mm (0.0020 in.) per 100 mm (3.94 in.)**

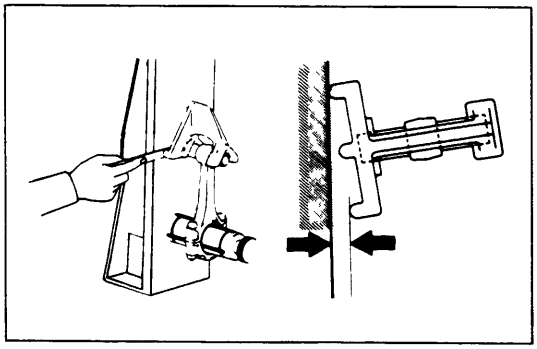

- Check that the rod is not twisted.

Twist limit: 0.15 mm (0.0059 in.) per 100 mm (3.94 in.)

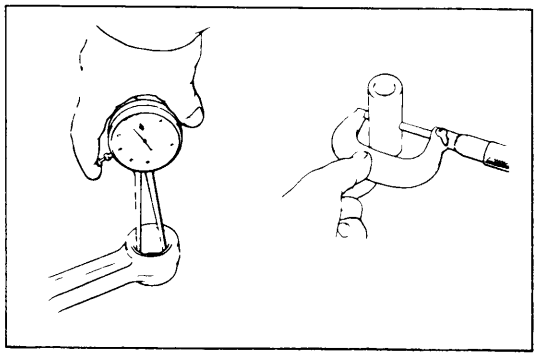

(b) Measure the oil clearance between the rod bushing and piston pin.

- Using an inside dial indicator, measure the inside diameter of the rod bushing.
- Using a micrometer, measure the diameter of the piston pin.
- Check that the difference between the measurements is less than the oil clearance limit.

If the clearance is greater than the limit, replace the rod bushing.

Oil clearance limit: 0.015 mm (0.0006 in.)

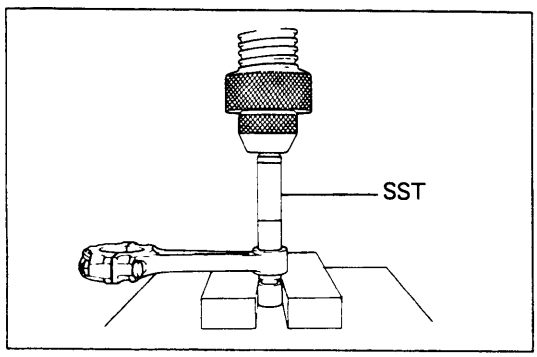

REPLACEMENT OF ROD BUSHING

1. REMOVE ROD BUSHING

Using SST, remove the rod bushing from the connecting rod.

SST 09222-30010

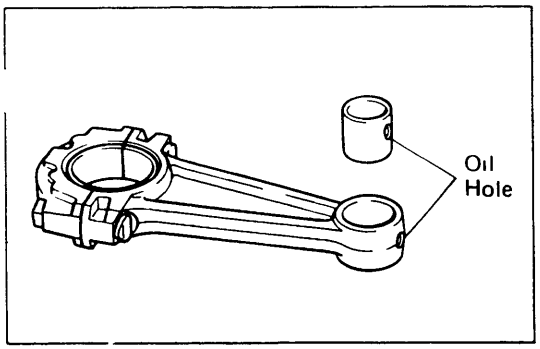

2. INSTALL NEW ROD BUSHING

Using SST, install the rod bushing to the connecting rod.

SST 09222-30010

NOTE: Align the bushing oil hole with the connecting rod oil hole.

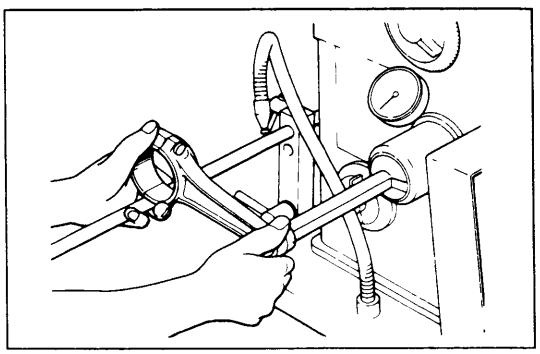

3. HONE NEW BUSHING AND CHECK PIN FIT IN CONNECTING ROD

(a) Hone the new bushing and check that the oil clearance is within standard specification.

Oil clearance standard: 0.005 — 0.011 mm (0.0002 — 0.0004 in.)

(b) Check the pin fit at the normal room temperature.

Coat the pin with engine oil and push the pin into the rod with thumb pressure.

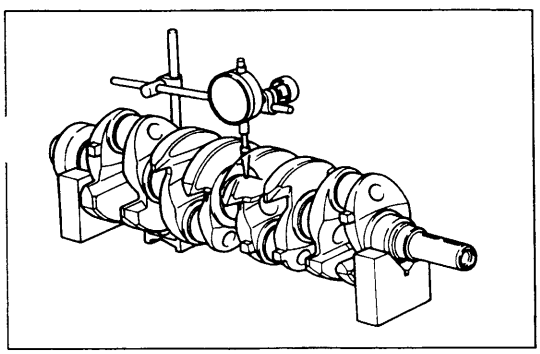

INSPECTION AND REPAIR OF CRANKSHAFT

1. MEASURE CRANKSHAFT

(a) Place the crankshaft on V-blocks.

(b) Using a runout gauge, measure the runout at the center journal.

If the runout is greater than the maximum, replace the crankshaft.

Circle runout maximum: 0.1 mm (0.004 in.)

(c) Using a micrometer, check the diameter of the main and crank pin journal.

Measure the journals for out-of-round and taper as shown.

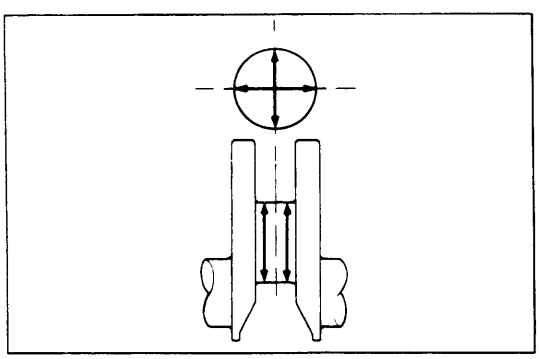

If journals are worn, regrind or replace the crankshaft.

Main journal diameter: 59.984 — 60.000 mm (2.3616 — 2.3622 in.)
Crank pin diameter: 52.988 — 53.000 mm (2.0861 — 2.0866 in.)
Taper and out-of-round limit: 0.01 mm (0.0004 in.)

2. GRIND CRANK PIN AND/OR MAIN JOURNAL, IF NECESSARY

Grind the crank pins and/or main journals to the undersized finished diameter. Install a new pin and/or main undersize bearings.

Bearing size (U/S 0.25)
Main journal finished diameter: 59.70 — 59.71 mm (2.3504 — 2.3508 in.)
Crank pin finished diameter: 52.70 — 52.71 mm (2.0748 — 2.0752 in.)
Taper and out-of-round limit: 0.01 mm (0.0004 in.)

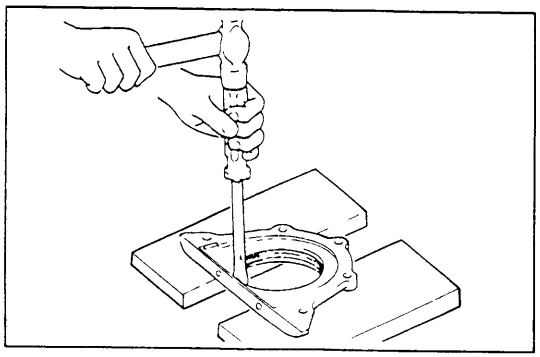

REPLACEMENT OF REAR OIL SEAL

1. REMOVE OIL SEAL FROM OIL SEAL RETAINER

Using a screwdriver, remove the oil seal.

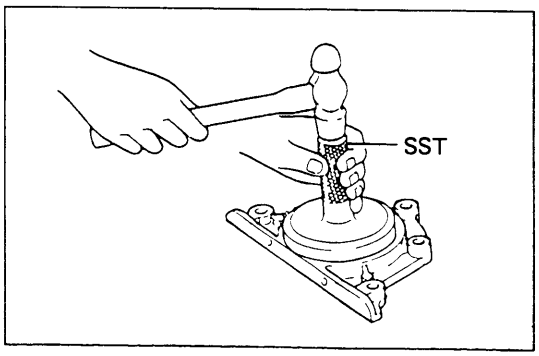

2. INSTALL NEW OIL SEAL ON OIL SEAL RETAINER

(a) Using SST, install a new oil seal.

SST 09223-41020

(b) Coat the seal lightly with multipurpose grease.

Size	Outside Diameter mm (in.)
O/S 0.50	92.460 – 92.490 (3.6402 – 3.6413)
O/S 1.00	92.960 – 92.990 (3.6598 – 3.6610)

BORING OF CYLINDERS

1. SELECT OVERSIZED PISTON

O/S pistons with pins are available in the sizes listed. Replace pistons in matched sets. Take the largest bo. measured and select the oversized piston for that bore. Bore all cylinders for the oversized piston selected.

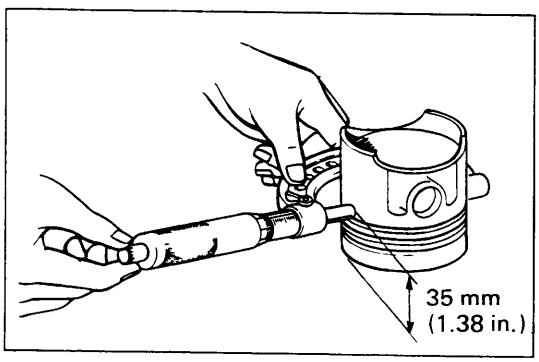

2. CALCULATE DIMENSION TO BORE CYLINDERS

(a) Using a micrometer, measure the piston diameter as shown.

(b) Calculate the size each cylinder is to be rebored as follows:

Size to be rebored = P + C - H

P = piston diameter

C = piston clearance

0.02 — 0.04 mm (0.0008 — 0.0016 in.)

H = allowance for honing

Less than 0.02 mm (0.0008 in.)

3. BORE AND HONE CYLINDERS TO CALCULATED DIMENSIONS

Honing amount: 0.02 mm (0.0008 in.) maximum

CAUTION: Excess honing will destroy the finished roundness.

GENERAL ASSEMBLY NOTE:

Thoroughly clean all parts to be assembled. Before installing parts, apply new engine oil to all sliding and rotating surfaces.

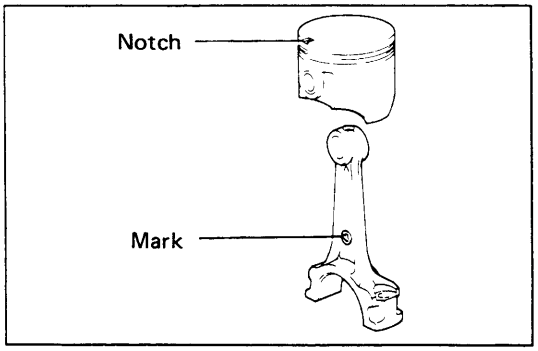

ASSEMBLY OF PISTON AND CONNECTING ROD ASSEMBLY

1. ASSEMBLY PISTON AND CONNECTING ROD

(a) Install a new snap ring on one side of the piston pin hole.

(b) Heat the piston in hot water to about 80°C (176°F).

(c) Align the notch on the piston with the mark on the rod and push the piston pin in with your thumb.

(d) Install a new snap ring on the other side of the pin.

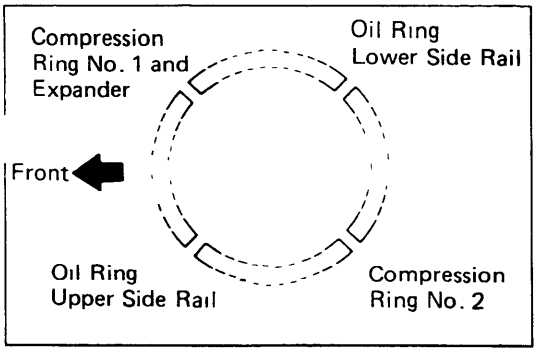

2. PLACE RINGS ON PISTON

(a) Using a ring expander, install the top two compression rings with the code marks facing upward.

(b) Position the piston rings so that the ring end gaps are in the shaded area as shown.

CAUTION: Do not align the end gaps.

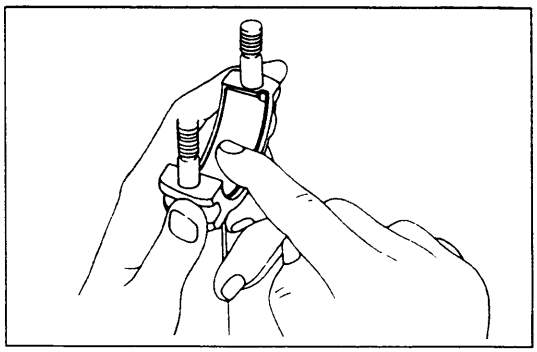

3. INSTALL BEARING INSERTS

(a) Install the bearing inserts in the connecting rods and rod caps.

(b) Lubricate the face of the bearings with engine oil.

INSTALLATION OF CRANKSHAFT, PISTON AND CONNECTING ROD ASSEMBLY

1. INSTALL UPPER MAIN BEARING IN CYLINDER BLOC..

(a) Place the upper main bearing in the block.

(b) Install the upper thrust washers on the center main bearing with the oil grooves facing outward.

(c) Lubricate the faces of the bearings with engine oil.

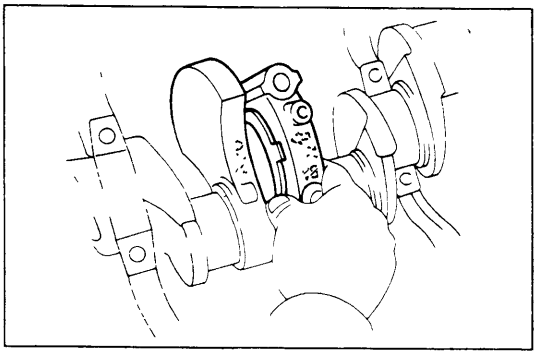

2. PLACE CRANKSHAFT IN CYLINDER BLOCK

3. INSTALL MAIN BEARING CAPS

NOTE: Each bearing cap is numbered.

(a) Install thrust washers on bearing cap No.3 with the oil grooves facing out ward.

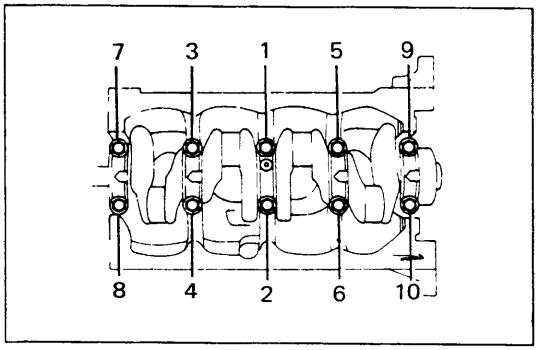

(b) Install the bearing caps in numbered order with the arrows facing forward. Tighten the bolts to the specified torque in the sequence shown in two or three passes.

Torque: 1,050 kg-cm (76 ft-lb, 103 N·m)

(c) Measure the crankshaft thrust. (See step 6 on page EM-53)

Using a feeler gauge, measure the clearance at the center bearing.

If the clearance is greater than the maximum, replace the thrust washer.

Maximum clearance: 0.30 mm (0.0118 in.)

Select a thrust washer to obtain the standard clearance.

Standard clearance: 0.02 — 0.22 mm (0.0008 — 0.0087 in.)

(d) Check that the crankshaft turns.

Size	Thickness mm (in.)
STD	2.00 (0.0787)
O/S 0.125	2.06 (0.0811)
O/S 0.250	2.13 (0.0839)

4. INSTALL PISTON AND CONNECTING ROD ASSEMBLY

(a) Lubricate the cylinder bore and rod journal with clean engine oil.

(b) Using a ring compressor, push the correctly numbered piston and rod assembly into each cylinder. Make sure the notch and mark are facing forward.

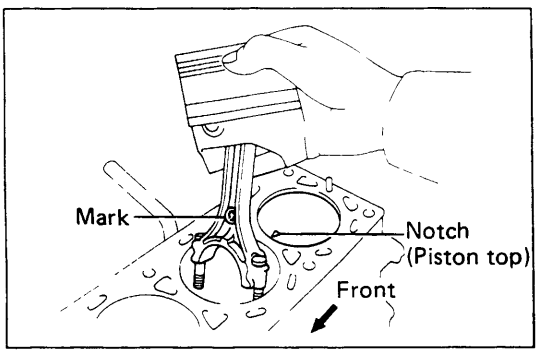

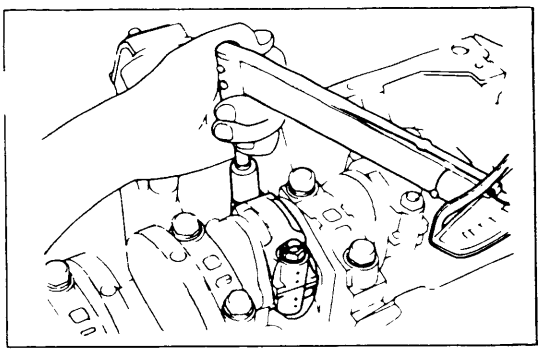

5. **INSTALL ROD BEARING CAPS**
   (a) Match the numbered cap with the numbered rod.
   (b) Align the marks punched on the rod and cap and tighten the cap nuts to specified torque alternately in two or three passes.

   Torque: 630 kg-cm (46 ft-lb, 62 N·m)

   NOTE: After tightening the caps, check that the crankshaft rotates smoothly.

6. **MEASURE ROD THRUST CLEARANCE**
   (See step 3 on page EM-52)

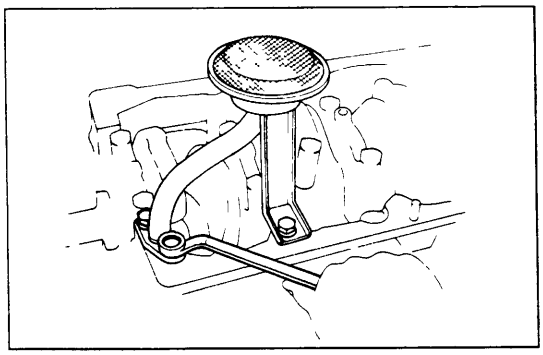

7. **INSTALL OIL STRAINER**
   (a) Clean the oil screen.
   (b) Place the oil screen gasket in place and install the oil screen assembly with four bolts. Torque the bolts.

   Torque: 130 kg-cm (9 ft-lb, 13 N·m)

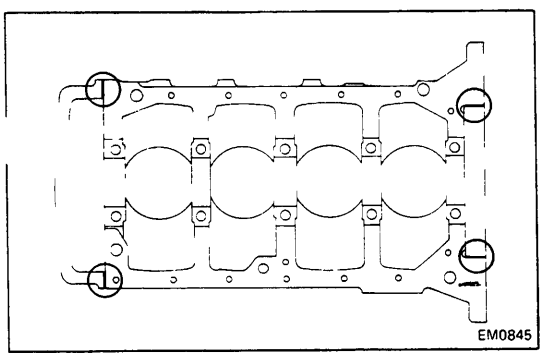

8. **INSTALL REAR OIL SEAL RETAINER**
9. **INSTALL TIMING CHAIN (See page EM-44)**
10. **INSTALL OIL PAN (See step 11 on page EM-46)**
11. **INSTALL CYLINDER HEAD (See page EM-27)**
12. **REMOVE ENGINE STANDS**
13. **INSTALL REAR END PLATE**
14. **INSTALL FLYWHEEL OR DRIVE PLATE ON CRANKSHAFT**
    Install the flywheel or drive plate on the crankshaft with the six bolts. Torque the bolts.

    Torque: 1,100 kg-cm (80 ft-lb, 108 N·m)

15. **INSTALL CLUTCH DISC AND COVER TO FLYWHEEL (for M/T) (See page CL-9)**

INSTALLATION OF ENGINE

1. **CONNECT TRANSMISSION TO ENGINE**

2. **PLACE ENGINE WITH TRANSMISSION IN VEHICLE**
   (a) Attach the engine hoist chain to the lifting brackets on the engine.
   (b) Lower the engine with transmission into the engine compartment.

3. **PLACE JACK UNDER TRANSMISSION**
   Be sure to put a wooden block between the jack and the transmission pan.

4. **JACK UP AND PUT TRANSMISSION ONTO MEMBER**

5. **INSTALL ENGINE MOUNTING TO FRAME BRACKET**
   (a) Align the engine mounting and frame bracket.
   (b) Install the engine mounting bolts on each side of the engine.
   (c) Remove the hoist chain.

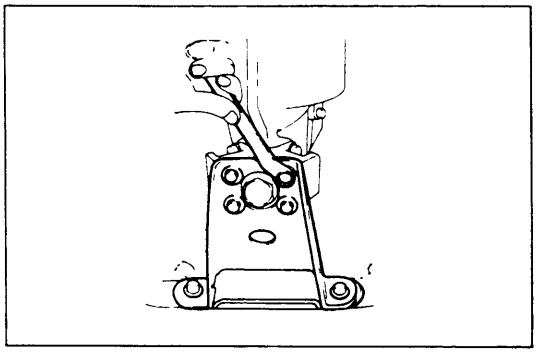

6. **INSTALL ENGINE REAR MOUNTING BRACKET**
   (a) Place the bracket between the transmission and member.
   (b) Install the eight bolts.
   (c) Torque the four transmission mount bolts.
   Torque: 260 kg-cm (19 ft-lb, 25 N·m)
   (d) Torque the four bracket bolts.
   Torque: 130 kg-cm (9 ft-lb, 13 N·m)

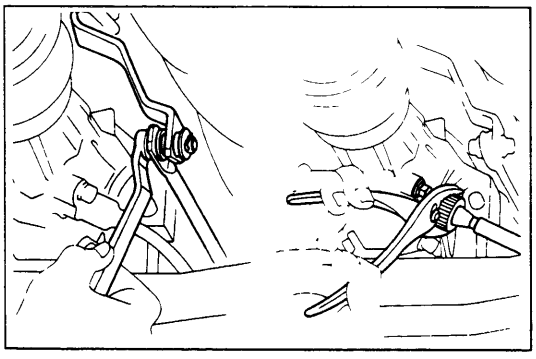

7. **CONNECT SPEEDOMETER CABLE**

8. **CONNECT SHIFT LINKAGE TO SHIFT LEVER (with A/T)**

9. **INSTALL CLUTCH RELEASE CYLINDER WITH BRACKET (with M/T)**

10. **INSTALL INTERMEDIATE SHAFT (See page PR-11)**

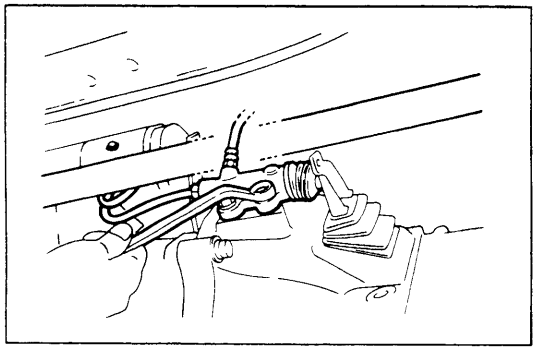

11. **INSTALL EXHAUST PIPE**
    (a) Connect the exhaust pipe to the catalytic converter.
    (b) Connect the exhaust pipe to the exhaust manifold.
    (c) Install the exhaust pipe clamp.

12. **CONNECT FOLLOWING PARTS:**
    (a) Neutral start switch wire (with A/T)
    (b) Back-up light switch wire
    (c) Fuel hose
    (d) Oil pressure sender gauge wire

13. **LOWER VEHICLE**

14. INSTALL SHIFT LEVER FOR INSIDE OF VEHICLE (with M/T)

15. CONNECT BOND CABLES TO ENGINE REAR SIDE AND RH SIDE

16. INSTALL COMPRESSOR TO BRACKET (with A/C)

(a) Install the compressor with four bolts.

(b) Install the drive belt and adjust the belt tension.

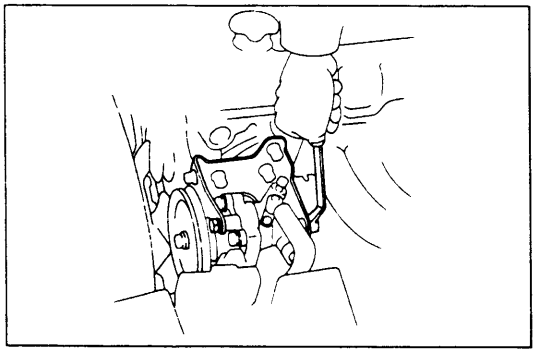

17. CONNECT BOND CABLE FOR VANE PUMP BRACKET

18. INSTALL VANE PUMP WITH VANE PUMP BRACKET (with power steering)

Install the vane pump with four bolts.

19. CONNECT FOLLOWING PARTS:

(a) Distributor wire

(b) High-tension cord

(c) Alternator wires

(d) Ox sensor wire

POST INSTALLATION

1. **CONNECT FOLLOWING WIRES:**
   - (a) Starter wire
   - (b) Oil pressure switch wire
   - (c) Vacuum switch wire
   - (d) Thermo sensor wire
   - (e) Injector wires
   - (f) OD thermo switch wire (with A/T)
   - (g) Water thermo sensor wire
   - (h) Cold start injector time switch wire

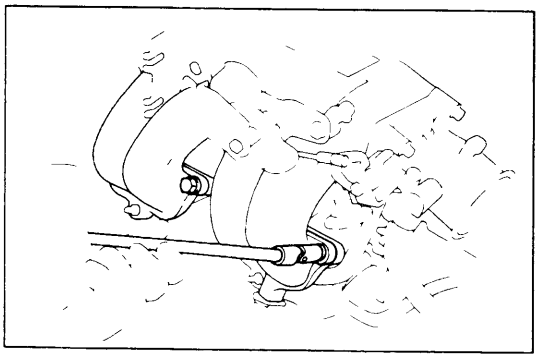

2. **INSTALL CHAMBER WITH THROTTLE BODY**
   - (a) Position a new gasket on the intake manifold.
   - (b) Install the chamber with throttle body.
   - (c) Install the four bolts.
   - (d) Install the two nuts with a bond cable.
   - (e) Connect the chamber and stay with a bolt.
   - (f) Install the EGR valve to the chamber with two bolts.

3. **CONNECT FOLLOWING WIRES:**
   - (a) Air valve wire
   - (b) Throttle position sensor wire
   - (c) Cold start injection wire
   - (d) Ox sensor wire

4. **CONNECT FOLLOWING PARTS:**
   - (a) BVSV hoses
   - (b) Cold start injection pipe
   - (c) Pressure regulator hose to the chamber
   - (d) Air control valve hose to actuator
   - (e) Water by-pass hose No.2 and No.3 to the throttle body.
   - (f) Air valve hose No.2 to the chamber
   - (g) Air valve hose No.1 to the throttle body
   - (h) EGR vacuum modulator hose
   - (i) Actuator hose (with cruise control)
   - (j) EVAP hose (for canister)
   - (k) Air control valve hoses
   - (l) Brake booster hose
   - (m) PCV hose No.1 and No.2

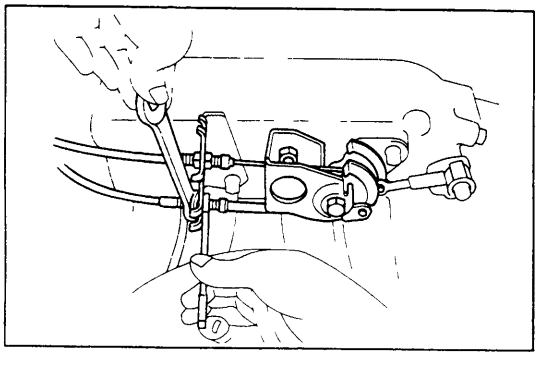

5. **CONNECT CABLES TO BRACKET**

   Connect the accelerator cable and throttle cable for A/T to the bracket.

6. **INSTALL RADIATOR WITH SHROUD**
   (a) Install the radiator with the shroud.
   (b) Connect the reservoir hose.
   (c) Connect the radiator upper and lower hoses to the engine.
   (d) Connect the two cooler hoses (with A/T)

7. **INSTALL COUPLING FAN WITH FAN**

8. **INSTALL AIR CLEANER HOSE AND AIR CLEANER**

9. **FILL WITH ENGINE OIL**
   Fill the engine with new oil, API grade SF or SF/CC multi-grade, fuel efficient and recommended viscosity oil.

   Capacity:
   Dry fill **4.8 liters (5.1 US qts. 4.2 Imp. qts)**
   Drain and refill
   w/o Oil filter change
   4.0 liters (4.2 US qts, 3.5 Imp. qts)
   w/ Oil filter change
   4.6 liters (4.9 US qts, 4.0 Imp. qts)

10. **FILL WITH COOLANT**
    Close the radiator and engine drain cocks and fill with coolant.

    Total capacity: w/Heater 8.4 liters
    (8.9 US qts, 7.4 Imp. qts)

11. **INSTALL ENGINE UNDER COVER**

12. **INSTALL AND ADJUST HOOD (See page BO-2)**

13. **CONNECT CABLE TO NEGATIVE TERMINAL OF BATTERY**

14. **START ENGINE**
    Warm up the engine and inspect for leaks.

15. **PERFORM ENGINE ADJUSTMENT**

16. **ROAD TEST**
    Perform a road test

17. **RECHECK COOLANT AND ENGINE OIL LEVEL**

22R
CYLINDER BLOCK
PREPARATION OF REMOVAL

1. **DISCONNECT CABLE FROM NEGATIVE TERMINAL OF BATTERY**

2. **REMOVE ENGINE UNDER COVER**

3. **REMOVE ENGINE HOOD**

   Disconnect the washer hose from the hood.

4. **DRAIN COOLANT FROM RADIATOR AND CYLINDER BLOCK**

5. **DRAIN AUTOMATIC TRANSMISSION FLUID (with A/T)**

6. **REMOVE AIR CLEANER**

   (a) Disconnect air hoses No.1 and No.4 from the air cleaner.

   (b) Remove the air cleaner.

7. **REMOVE COUPLING FAN WITH FAN**

8. **DISCONNECT TWO HEATER HOSES**

9. **REMOVE RADIATOR WITH SHROUD**

   (a) Disconnect the two cooler hoses. (with A/T)

   (b) Disconnect the radiator upper and lower hoses from the engine.

   (c) Disconnect the reservoir hose.

   (d) Remove the radiator with the shroud.

10. **DISCONNECT ACCELERATOR CABLE FROM CARBURETOR**

    Disconnect the cable from carburetor and bracket.

11. **DISCONNECT FOLLOWING WIRES:**

    (a) VSV wire for EVAP

    (b) VSV wire for A/C

    (c) Vacuum switch wire

    (d) HAC wire (Ex. Calif.)

    (e) Cold mixture heater wire

    (f) OD thermo switch wire (for A/T)

    (g) Fuel cut solenoid wire

    (h) Water temperature sender gauge wire

    (i) EACV wire (for Calif.)

    (j) Starter wire

    (k) Oil pressure switch wire

12. DISCONNECT FOLLOWING PARTS:
    (a) Brake booster hose
    (b) Fuel main hose from fuel inlet pipe
    (c) Fuel return hose from fuel return pipe
    (d) Charcoal canister hose
13. REMOVE DRIVE BELT

REMOVAL OF CYLINDER BLOCK
(See page EM-49)

PREPARATION FOR DISASSEMBLY
(See page EM-51)

DISASSEMBLY OF CYLINDER BLOCK
(See page EM-52)

INSPECTION OF CYLINDER BLOCK
(See page EM-55)

DISASSEMBLY OF PISTON AND CONNECTING ROD ASSEMBLY
(See page EM-56)

INSPECTION OF PISTON AND CONNECTING ROD ASSEMBLY
(See page EM-57)

REPLACEMENT OF ROD BUSHING
(See page EM-58)

INSPECTION AND REPAIR OF CRANKSHAFT
(See page EM-59)

REPLACEMENT OF REAR OIL SEAL
(See page EM-60)

BORING OF CYLINDERS
(See page EM-60)

ASSEMBLY OF PISTON AND CONNECTING ROD ASSEMBLY
(See page EM-61)

INSTALLATION OF CRANKSHAFT, PISTON AND CONNECTING ROD ASSEMBLY
(See page EM-62)

INSTALLATION OF ENGINE
(See page EM-64)

POSTINSTALLATION OF CYLINDER BLOCK

1. **CONNECT FOLLOWING WIRES:**
   - (a) Starter wire
   - (b) Oil pressure switch wire
   - (c) VCS wire (Ex. Calif.)
   - (d) EACV wire (for Calif.)
   - (e) Water temperature sender gauge wire
   - (f) Fuel cut solenoid wire
   - (g) OD thermo switch wire (for A/T)
   - (h) Cold mixture heater wire
   - (i) HAC wire (Ex. Calif.)
   - (j) Vacuum switch wire
   - (k) VSV wire for A/C
   - (l) VSV wire for EVAP
2. **CONNECT FOLLOWING PARTS:**
   - (a) Charcoal canister hose from the VSV
   - (b) Fuel return hose from the fuel return pipe
   - (c) Fuel main hose from the fuel inlet pipe
   - (d) Brake booster hose
3. **CONNECT ACCELERATOR CABLE TO CARBURETOR**
   - (a) Connect the cable to the carburetor and bracket.
   - (b) Install the tension spring.
4. **INSTALL RADIATOR WITH SHROUD**
   - (a) Install the radiator with the shroud.
   - (b) Connect the reservoir hose.
   - (c) Connect the radiator upper and lower hoses to the engine.
   - (d) Connect the two cooler hoses (with A/T)

5. **INSTALL COUPLING FAN WITH FAN**

6. **CONNECT TWO HEATER HOSES**

7. **INSTALL AIR CLEANER**
   (a) Connect air hoses No.1 and No.4 to the cleaner.
   (b) Install the air cleaner.

8. **FILL WITH ENGINE OIL**
   Fill the engine with new oil, API grade SF or SF/CC multi-grade, fuel efficient and recommended viscosity oil.

   Capacity:

Dry fill	**4.8 liters (5.1 US qts, 4.2 Imp. qts)**
Drain and refill	
w/o Oil filter change	**4.0 liters (4.2 US qts, 3.5 Imp. qts)**
w/ Oil filter change	**4.6 liters (4.9 US qts, 4.0 Imp. qts)**

9. **FILL WITH COOLANT**
   Close the radiator and engine drain cocks and fill with coolant.

   Total capacity: w/Heater 8.4 liters (8.9 US qts, 7.4 Imp. qts)

10. **INSTALL ENGINE UNDER COVER**

11. **INSTALL AND ADJUST HOOD (See page BO-2)**

12. **CONNECT CABLE TO NEGATIVE TERMINAL OF BATTERY**

13. **START ENGINE**
    Warm up the engine and inspect for leaks.

14. **PERFORM ENGINE ADJUSTMENT**

15. **ROAD TEST**
    Perform a road test.

16. **RECHECK COOLANT AND ENGINE OIL LEVEL**

EMISSION CONTROL SYSTEMS

Page

EFI ENGINE

SYSTEM PURPOSE EC-2
COMPONENT LAYOUT AND SCHEMATIC DRAWING EC-3
POSITIVE CRANKCASE VENTILATION (PCV) SYSTEM EC-4
FUEL EVAPORATIVE EMISSION CONTROL (EVAP) SYSTEM EC-6
DASH POT (DP) SYSTEM EC-8
EXHAUST GAS RECIRCULATION (EGR) SYSTEM EC-11
THREE-WAY CATALYST (TWC) SYSTEM EC-14

CARBURETOR ENGINE

SYSTEM PURPOSE EC-16
COMPONENT LAYOUT AND SCHEMATIC DRAWING EC-17
POSITIVE CRANKCASE VENTILATION (PCV) SYSTEM EC-19
FUEL EVAPORATIVE EMISSION CONTROL (EVAP) SYSTEM EC-21
MIXTURE CONTROL (MC) SYSTEM EC-26
DASH POT (DP) SYSTEM EC-28
EXHAUST GAS RECIRCULATION (EGR) SYSTEM EC-30
AIR SUCTION AND FUEL SYSTEM FEEDBACK CONTROL SYSTEM EC-36
AIR SUCTION (AS) SYSTEM EC-43
THREE-WAY CATALYST (TWC) SYSTEM EC-46
OXIDATION CATALYST (OC) SYSTEM EC-46
HIGH ALTITUDE COMPENSATION (HAC) SYSTEM EC-48
AUXILIARY SYSTEMS EC-53
1. Automatic Hot Air Intake (HAI) System EC-53
2. Automatic Choke System EC-55
3. Choke Breaker (CB) System EC-57
4. Choke Opener System EC-58
5. Auxiliary Acceleration Pump (AAP) System EC-61
6. Deceleration Fuel Cut System EC-63
7. Idle Advance System EC-66
8. Cold Mixture Heater (CMH) System EC-68

NOTE: TROUBLESHOOTING
See page EM-2 (for EFI Engine)
See page EM-5 (for Carb. Engine)

EC

SYSTEM PURPOSE

System	Abbreviation	Purpose
Positive crankcase ventilation	PCV	Reduces blow-by gas (HC)
Fuel evaporative emission control	EVAP	Reduces evaporative HC
Dash pot *	DP	Reduces HC and CO performance at idle
Exhaust gas recirculation	EGR	Reduces NOx
Three-way catalyst	TWC	Reduces HC,CO and NOx
Electronic fuel injection	EFI	Regulates all engine conditions for reduction of exhaust emissions.

Remark: * M/T vehicles only

COMPONENT LAYOUT AND SCHEMATIC DRAWING

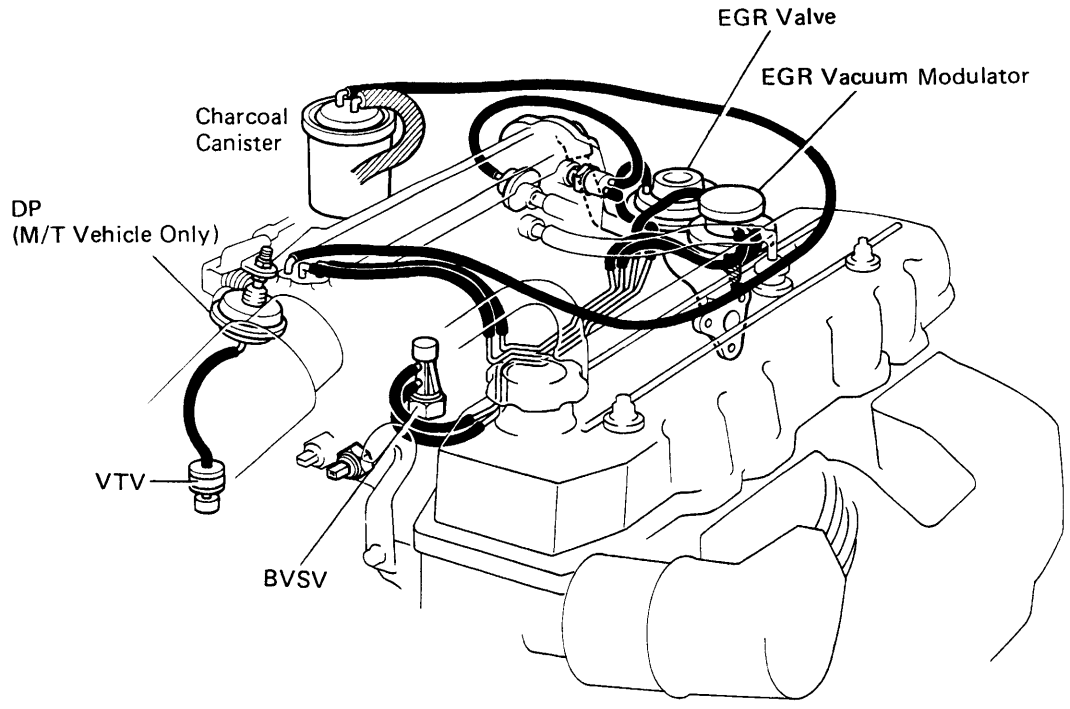

EC0990

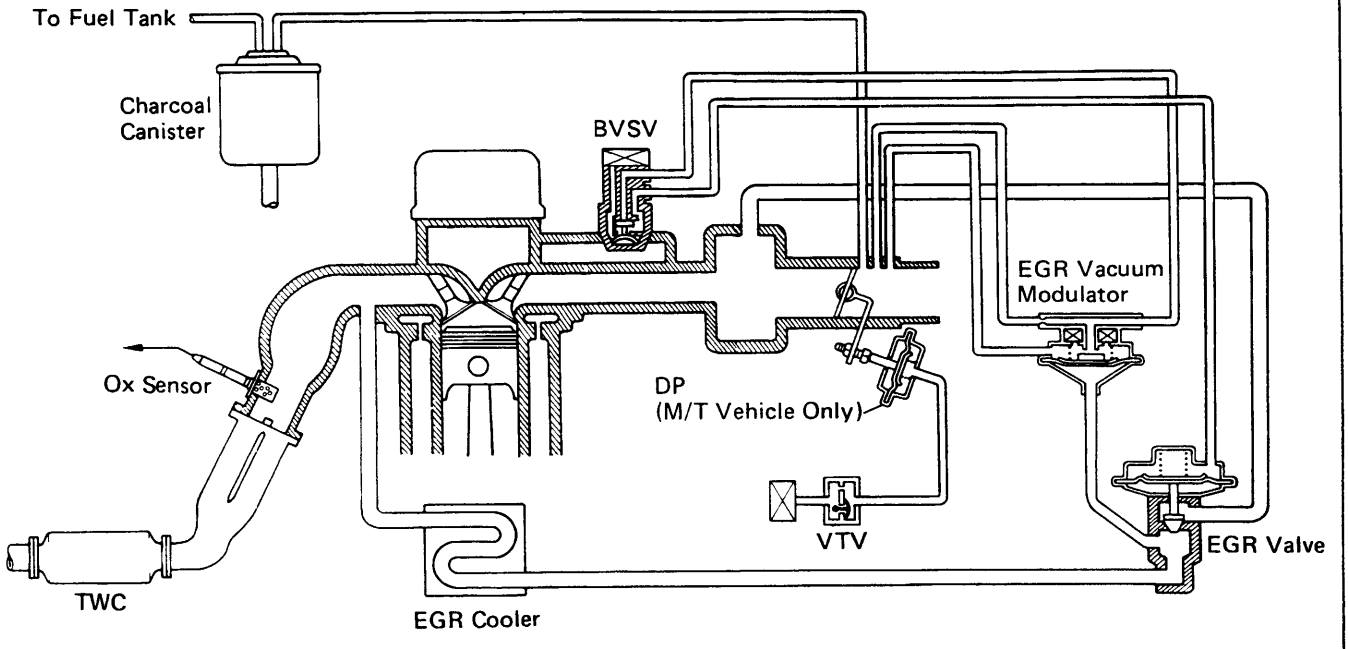

EC0980

POSITIVE CRANKCASE VENTILATION (PCV) SYSTEM

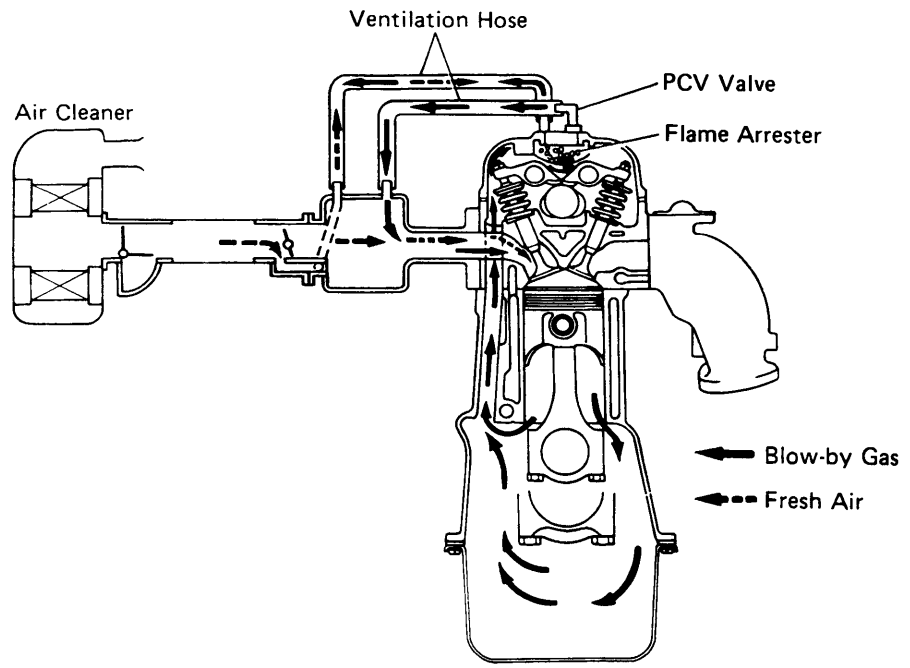

EC1036

To reduce HC emissions, crankcase blow-by gas (HC) is routed through the PCV valve to the intake manifold for combustion in the cylinders.

Engine not Running or Backfiring

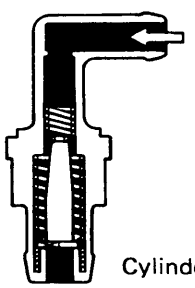

○PCV VALVE IS CLOSED.

EC1013

Normal Operation

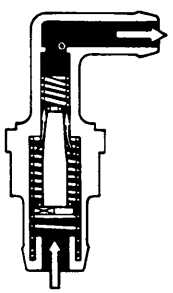

○PCV VALVE IS OPEN.
○VACUUM PASSAGE IS LARGE.

EC1014

Idling or Decelerating

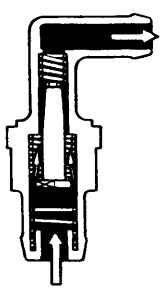

○PCV VALVE IS OPEN.
○VACUUM PASSAGE IS SMALL.

EC1015

Acceleration or Heavy Load

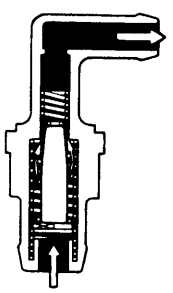

○PCV VALVE IS FULLY OPEN.

EC1016

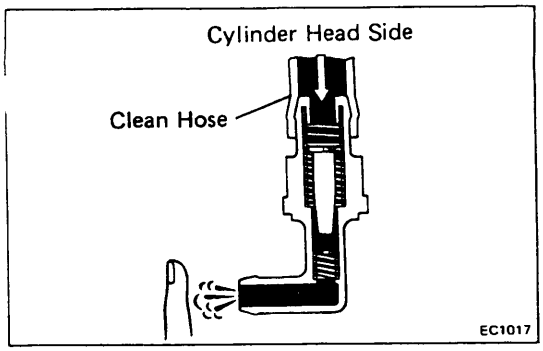

INSPECTION OF PCV VALVE

1. **REMOVE PCV VALVE**
2. **ATTACH CLEAN HOSE TO PCV VALVE**
3. **BLOW FROM CYLINDER HEAD SIDE**
   Check that air passes through easily.
   CAUTION: Do not suck air through the valve. Petroleum substances inside the valve are harmful.

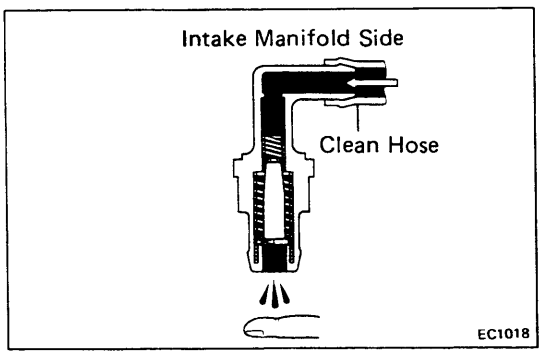

4. **BLOW FROM INTAKE MANIFOLD SIDE**
   Check that air passes through with difficulty.
   If the PCV valve fails either check, replace it.
5. **REINSTALL PCV VALVE**

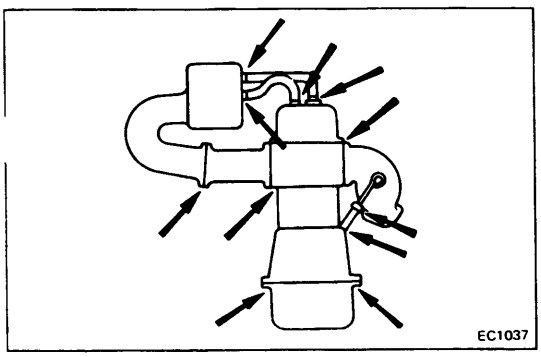

INSPECTION OF PCV HOSES AND CONNECTIONS

VISUALLY INSPECT HOSES, CONNECTIONS AND GASKETS

Check for cracks, leaks or damage.

FUEL EVAPORATIVE EMISSION CONTROL (EVAP) SYSTEM

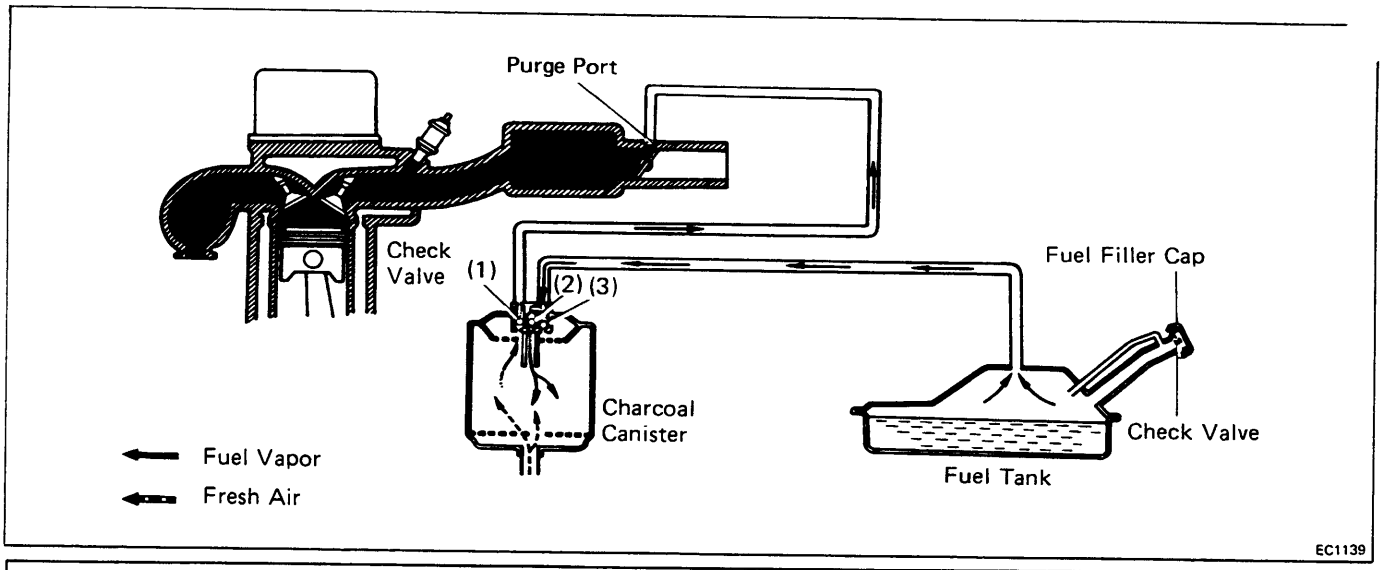

To reduce HC emission, evaporated fuel from the fuel tank is routed through the charcoal canister to the throttle body for combustion in the cylinders.

Condition	Check Valve in Charcoal Canister			Check valve in Fuel Filler Cap	Evaporated Fuel (HC)
	(1)	(2)	(3)		
Parking, idling and low speed	CLOSED	—	—	—	HC from tank is absorbed in the canister.
Medium and high speed	OPEN	—	—	—	HC from canister is led into throttle body.
High pressure in tank	—	OPEN	CLOSED	CLOSED	HC from tank is absorbed in the canister.
High vacuum in tank	—	CLOSED	OPEN	OPEN	(Air is led into the tank.)

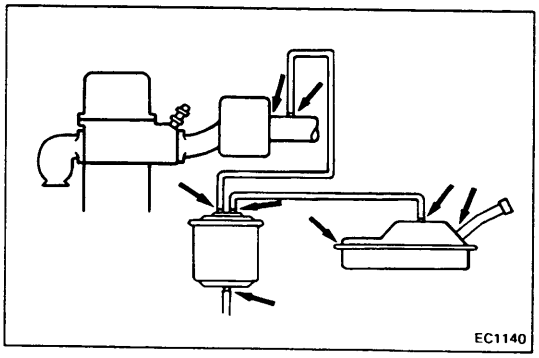

INSPECTION OF FUEL VAPOR LINES, FUEL TANK AND FILLER CAP

1. **VISUALLY INSPECT LINES AND CONNECTIONS**
   Look for loose connections, sharp bends or damage.
2. **VISUALLY INSPECT FUEL TANK**
   Look for deformation, cracks or fuel leakage.

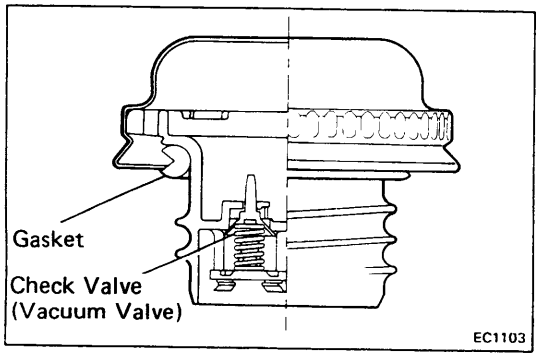

3. **VISUALLY INSPECT FUEL FILLER CAP**
   Look for a damaged or deformed gasket and cap.
   If necessary, repair or replace the cap.

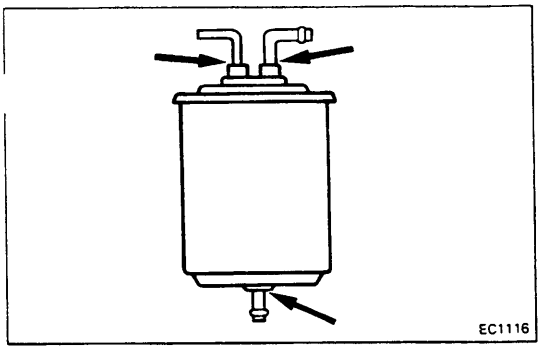

INSPECTION OF CHARCOAL CANISTER

1. **REMOVE CHARCOAL CANISTER**

2. **VISUALLY INSPECT CHARCOAL CANISTER CASE**

   Look for cracks or damage.

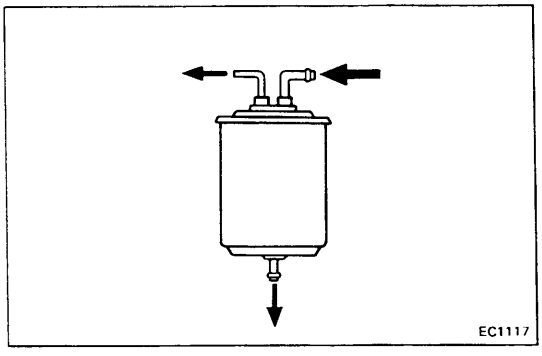

3. **CHECK FOR CLOGGED FILTER AND STUCK CHECK VALVE**

   (a) Using low pressure compressed air, blow into the tank pipe and check that the air flows without resistance from the other pipes.

   (b) Blow into the purge pipe and check that the air does not flow from the other pipes.

   If a problem is found, replace the charcoal canister.

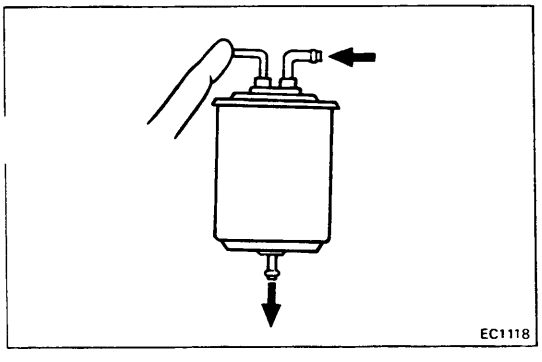

4. **CLEAN FILTER IN CANISTER**

   Clean the filter by blowing 3 kg/cm² (43 psi, 294 kPa) of compressed air into the tank pipe, while holding the purge pipe closed.

   NOTE:
   - Do not attempt to wash the canister.
   - No activated carbon should come out.

5. **INSTALL CHARCOAL CANISTER**

DASH POT (DP) SYSTEM (M/T Vehicles Only)

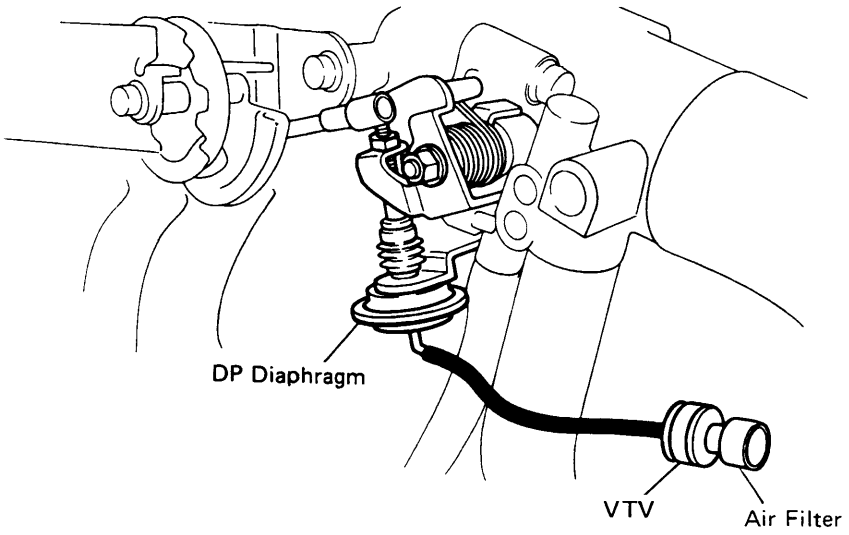

EC1201

Normal Driving

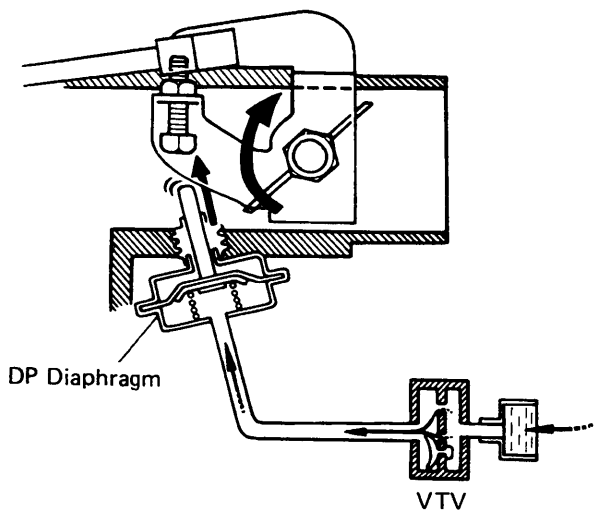

EC1202

Deceleration

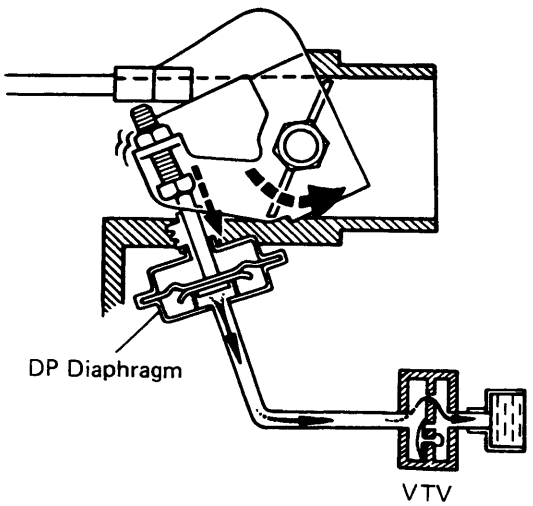

EC1203

To reduce HC and CO emissions, when decelerating the dash pot opens the throttle valve slightly more than at idle. This causes the air-fuel mixture to burn completely.

Condition	DP Diaphragm	VTV	Throttle Valve
Idling	Pushed in by return force of throttle valve	CLOSED	Idle speed position
Normal driving	Pushed out by diaphragm spring	OPEN	High speed position
Deceleration	Pushed in by return force of throttle valve	CLOSED	Slightly opens and then slowly closes to idle position

INSPECTION OF DP SYSTEM

1. **WARM UP ENGINE**

2. **CHECK IDLE SPEED AND ADJUST, IF NECESSARY**

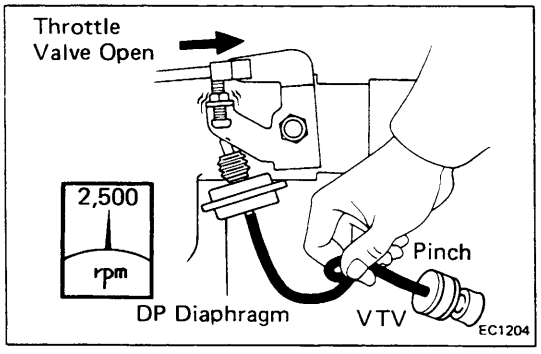

3. **CHECK DP SETTING SPEED**

(a) Maintain the engine speed at 2,500 rpm.

(b) Pinch the vacuum hose between the DP and VTV.

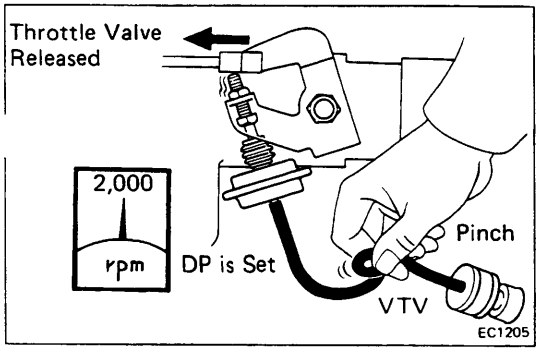

(c) Release the throttle valve.

(d) Check that the DP is set.

DP setting speed: 2,000 rpm

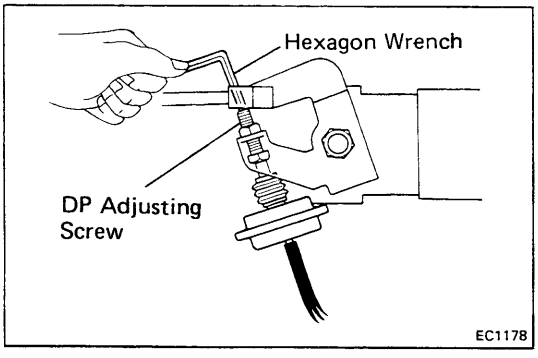

If not at specified speed, adjust with the DP adjusting screw.

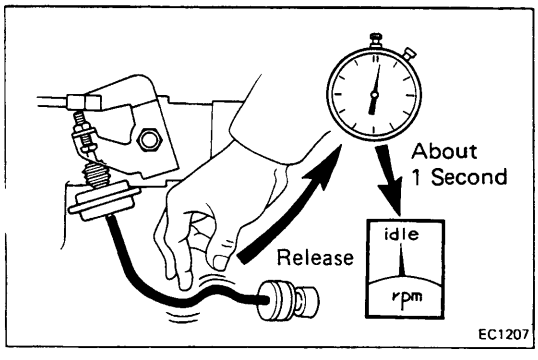

4. **CHECK OPERATION OF VTV**

(a) Set the DP speed in the same procedure as above; 3. (a) to (c).

(b) Release the pinched hose and check that the engine returns to idle speed in about 1 second.

IF NO PROBLEM IS FOUND WITH THIS INSPECTION, THE SYSTEM IS OKAY; OTHERWISE INSPECT EACH PART

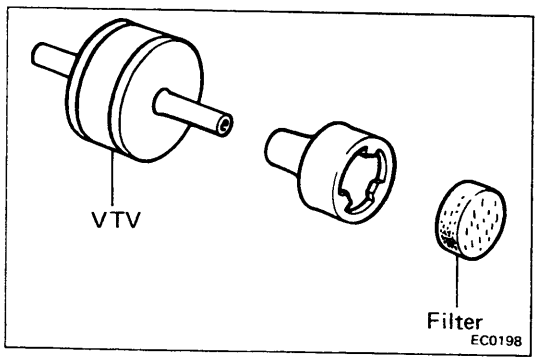

INSPECTION OF VTV

1. **CHECK AND CLEAN FILTER ON VTV**
   (a) Check the filter for contamination or damage.
   (b) Using compressed air, clean the filter.

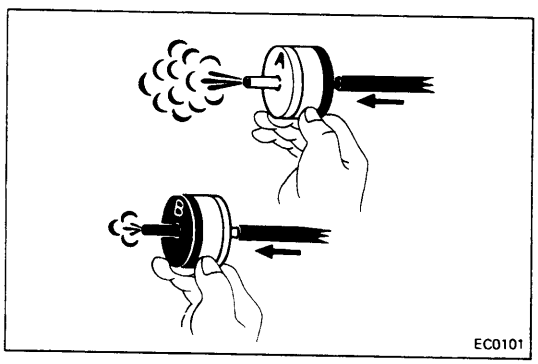

2. **CHECK VTV BY BLOWING AIR INTO EACH SIDE**
   (a) Check that air flows without resistance from B to A.
   (b) Check that air flows with difficulty from A to B.

EXHAUST GAS RECIRCULATION (EGR) SYSTEM

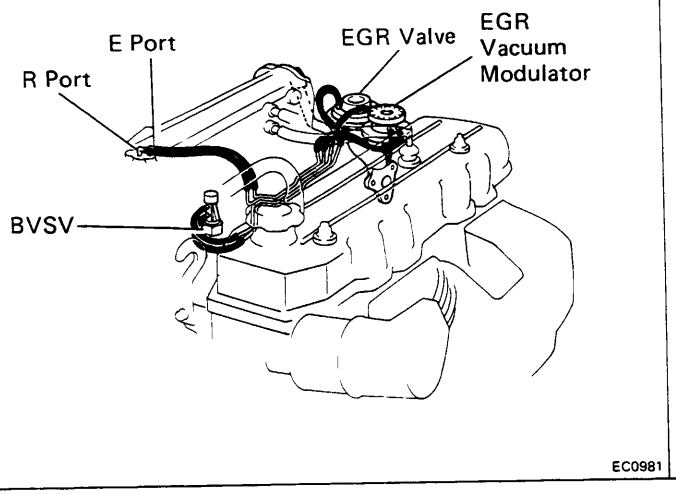

EC0981

(1)

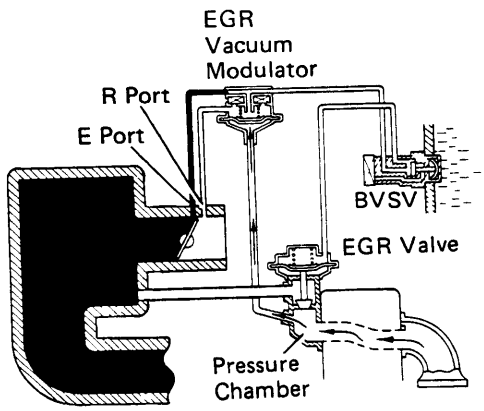

EC0982

(2)

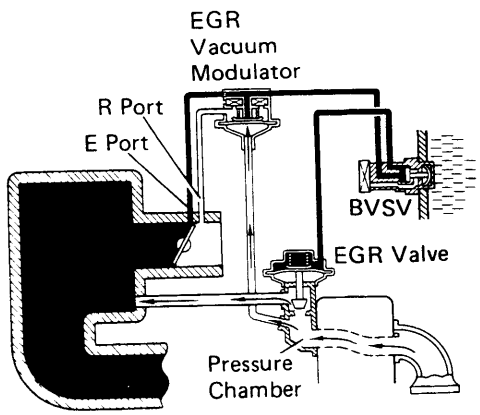

EC0983

(3)

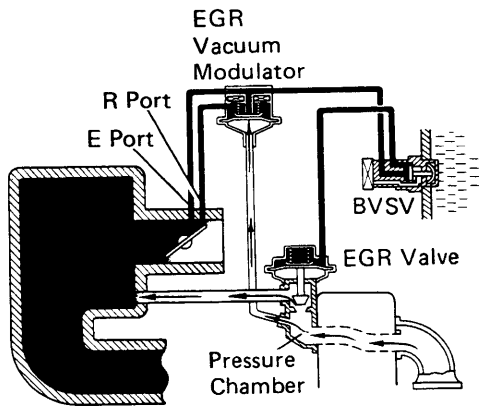

EC0984

To reduce NOx emission, part of the exhaust gases are recirculated through the EGR valve to the intake manifold to lower the maximum combustion temperature.

Coolant Temp.	BVSV	Throttle Valve Opening Angle	Pressure in the EGR Valve Pressure Chamber		EGR Vacuum Modulator	EGR Valve	Exhaust Gas
Below 30°C (86°F)	CLOSED	—	—		—	CLOSED	Not recirculated
Above 44°C (111°F)	OPEN	Positioned below E port	—		—	CLOSED	Not recirculated
		Positioned between E port & R port	(1) LOW	*Pressure constantly alternating between low and high	OPENS passage to atmosphere	CLOSED	Not recirculated
			(2) HIGH		CLOSES passage to atmosphere	OPEN	Recirculated
		Positioned above R port	(3) HIGH	**	CLOSES passage to atmosphere	OPEN	Recirculated (increase)

Remarks: *Pressure increase→Modulator closes→EGR valve opens→Pressure drops→EGR valve closes←Modulator opens←

**When the throttle valve is positioned above the R port, the EGR vacuum modulator will close the atmosphere passage and open the EGR valve to increase the EGR gas, even if the exhaust pressure is insufficiently low.

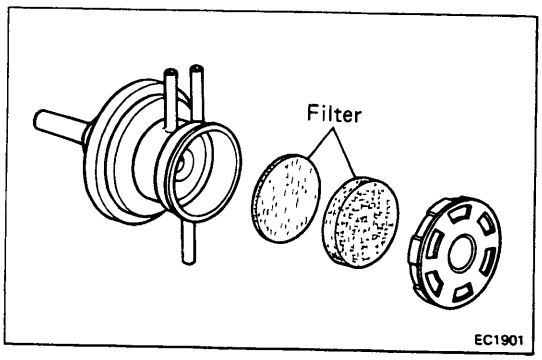

INSPECTION OF EGR SYSTEM

1. CHECK AND CLEAN FILTER IN EGR VACUUM MODULATOR

(a) Check the filter for contamination or damage.

(b) Using compressed air, clean the filter.

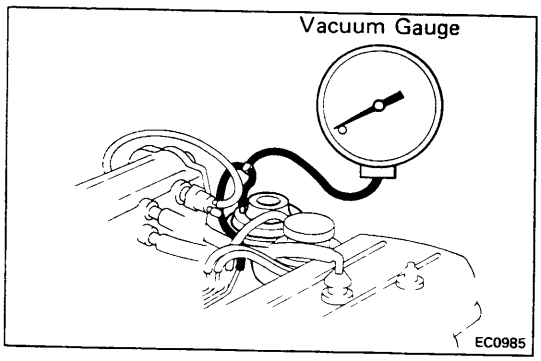

2. PREPARATION

Disconnect the vacuum hose from the EGR valve and, using a three way union, connect a vacuum gauge to it.

3. CHECK SEATING OF EGR VALVE

Start the engine and check that the engine starts and runs at idle.

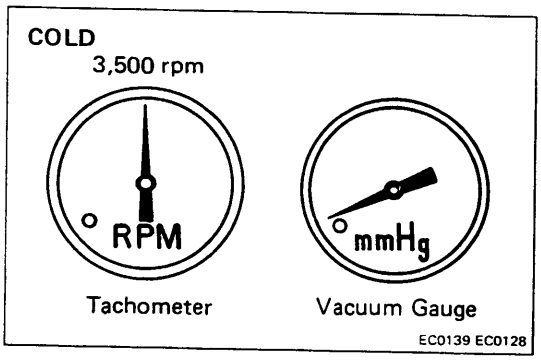

4. CHECK BVSV WITH COLD ENGINE

(a) The coolant temperature should be below 30°C (86°F).

(b) Check that the vacuum gauge indicates zero at 3,5' rpm.

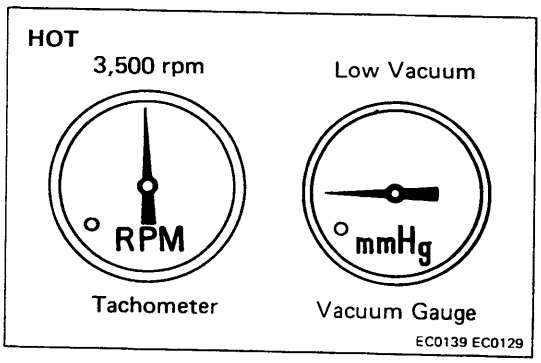

5. CHECK BVSV AND EGR VACUUM MODULATOR WITH HOT ENGINE

(a) Warm up the engine.

(b) Check that the vacuum gauge indicates low vacuum at 3,500 rpm.

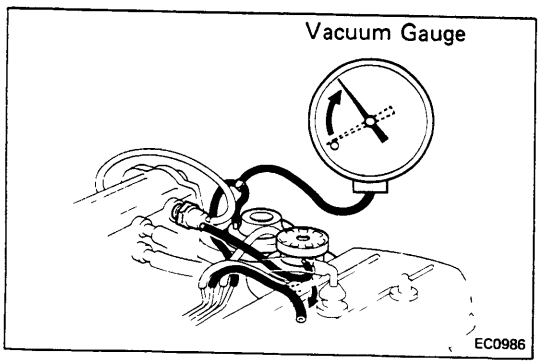

(c) Disconnect the vacuum hose from R port of the EGR vacuum modulator and connect R port directly to the intake manifold with another hose.

(d) Check that the vacuum gauge indicates high vacuum at 3,500 rpm.

NOTE: As a large amount of EGR gas enters, the engir will misfire slightly at this time.

(e) Disconnect the vacuum gauge and reconnect the vacuum hoses to the proper locations.

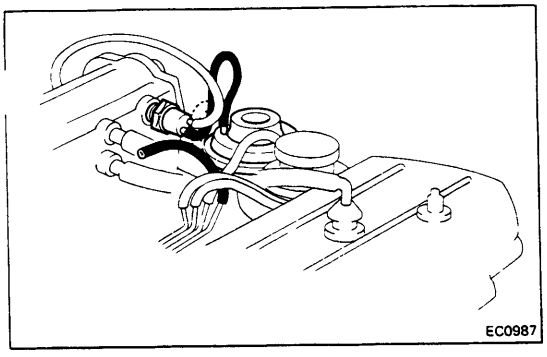

6. CHECK EGR VALVE

(a) Apply vacuum directly to the EGR valve with the engine idling.

(b) Check that the engine runs rough or dies.

(c) Reconnect the vacuum hoses to the proper location.

IF NO PROBLEM IS FOUND WITH THIS INSPECTION, THE SYSTEM IS OKAY; OTHERWISE INSPECT EACH PART

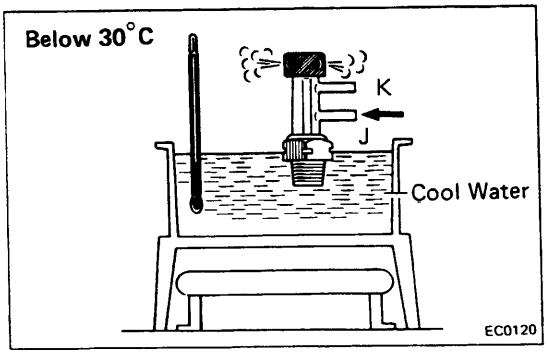

INSPECTION OF BVSV

CHECK BVSV BY BLOWING AIR INTO PIPE

(a) Drain the coolant from the radiator into a suitable container.

(b) Remove the BVSV.

(c) Cool the BVSV to below 30°C (86°F).

(d) Check that air flows from pipe J to the air filter.

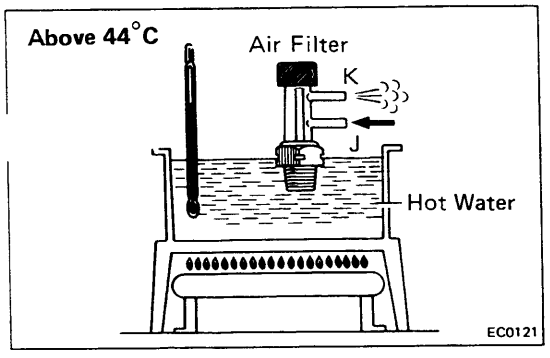

(e) Heat the BVSV to above 44°C (111°F).

(f) Check that air flows from pipe J to pipe K.

(g) Apply liquid sealer to the threads of the BVSV and reinstall.

(h) Fill the radiator with coolant.

If a problem is found, replace the BVSV.

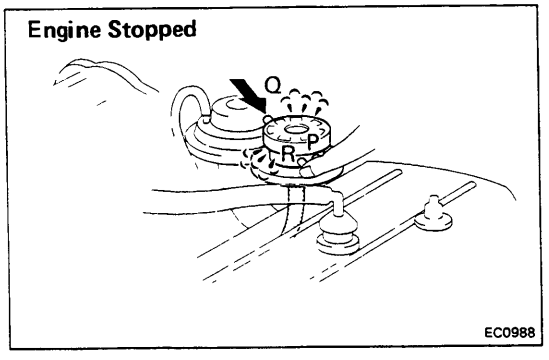

INSPECTION OF EGR VACUUM MODULATOR

CHECK EGR VACUUM MODULATOR OPERATION

(a) Disconnect the vacuum hoses from port P, Q and R of the EGR vacuum modulator.

(b) Plug port P and R with your finger.

(c) Blow air into port Q. Check that the air passes through to the air filter side freely.

(d) Start the engine and maintain the speed at 3,000 rpm.

(e) Repeat the above test. Check that there is a strong resistance to air flow.

(f) Reconnect the vacuum hoses to the proper locations.

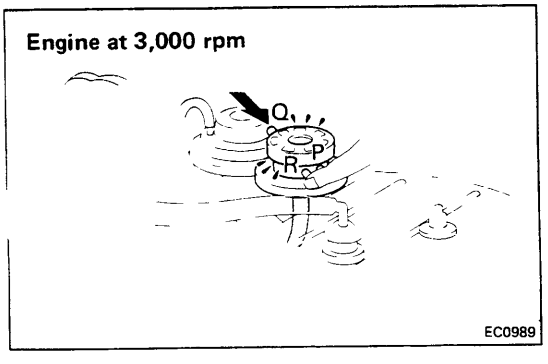

INSPECTION OF EGR VALVE

1. REMOVE EGR VALVE

Check the valve for sticking and heavy carbon deposits. If a problem is found, replace it.

2. INSTALL EGR VALVE WITH NEW GASKET

THREE-WAY CATALYST (TWC) SYSTEM

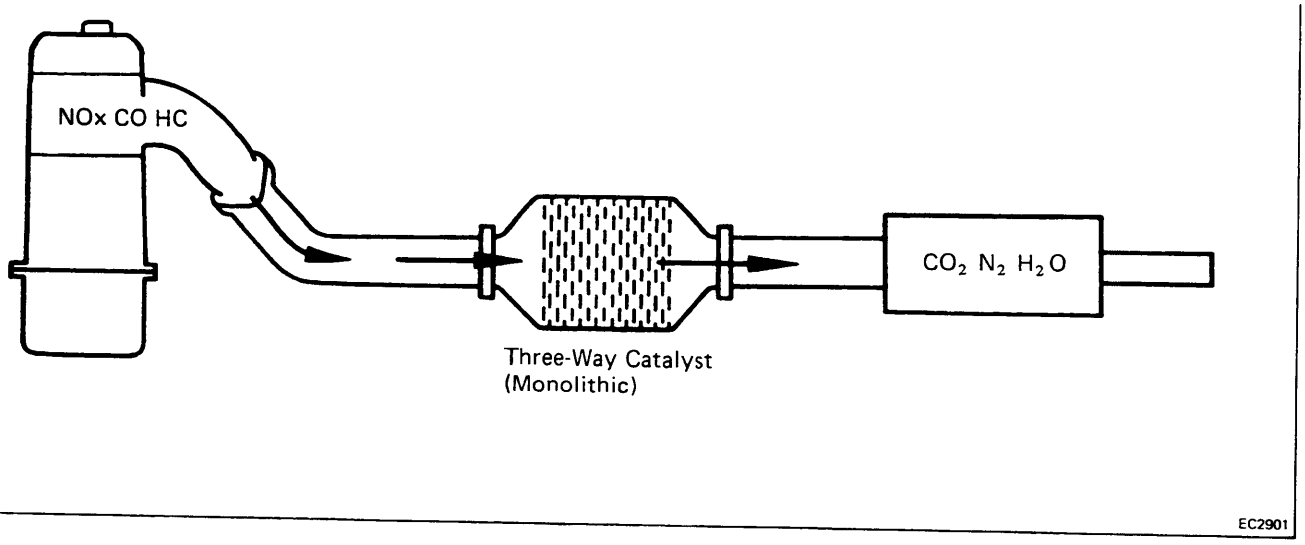

EC2901

To reduce HC, CO and NOx emissions, they are oxidized, reduced and converted to nitrogen (N_2), carbon dioxide (CO_2) and water (H_2O) by the catalyst.

Exhaust Port		TWC		Exhaust Gas
HC, CO and NOx	→	Oxidation and reduction	→	CO_2 H_2O N_2

INSPECTION OF EXHAUST PIPE ASSEMBLY

1. CHECK CONNECTIONS FOR LOOSENESS OR DAMAGE
2. CHECK CLAMPS FOR WEAKNESS, CRACKS OR DAMAGE

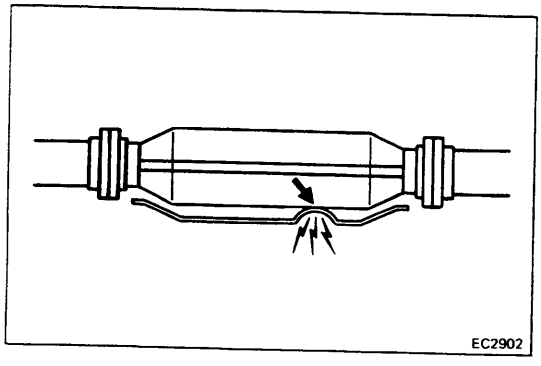

EC2902

INSPECTION OF CATALYTIC CONVERTER

CHECK FOR DENTS OR DAMAGE

If any part of the protector is damaged or dented to the extent that it contacts the catalyst, repair or replace it.

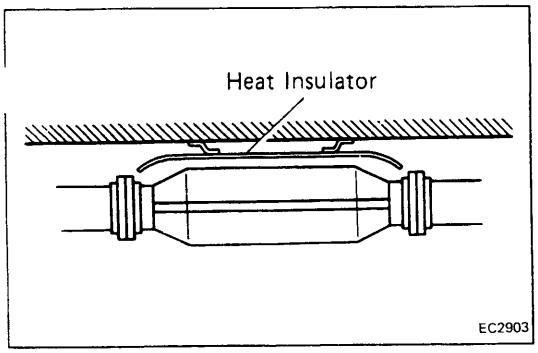

INSPECTION OF HEAT INSULATOR

1. **CHECK HEAT INSULATOR FOR DAMAGE**
2. **CHECK FOR ADEQUATE CLEARANCE BETWEEN CATALYTIC CONVERTER AND HEAT INSULATOR**

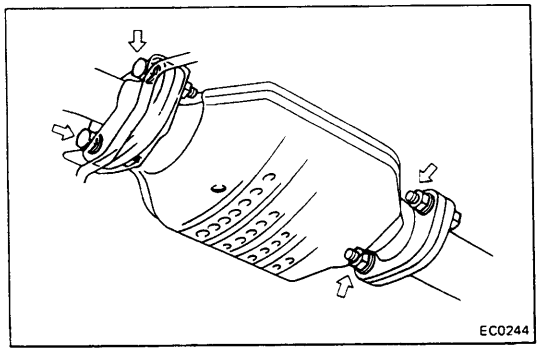

REPLACEMENT OF CATALYTIC CONVERTER

1. **REMOVE CONVERTER**
   (a) Jack up the vehicle.
   (b) Check that the converter is cool.
   (c) Remove the bolts at the front and rear of the converter.
   (d) Remove the converter and gaskets.
2. **INSTALL CONVERTER**
   (a) Place new gaskets on the converter front and rear pipes, and connect the converter to the exhaust pipes.
   (b) Tighten the bolts.

   Torque: Catalyst — Exhaust pipe
   440 kg-cm (32 ft-lb, 43 N·m)

   (c) Reinstall the bracket bolts and tighten them.

SYSTEM PURPOSE

System	Abbreviation	Purpose	Federal & Canada	California
Positive crankcase ventilation	PCV	Reduces blow-by gas (HC)	●	●
Fuel evaporative emission control	EVAP	Reduces evaporative HC	●	●
Mixture control*1	MC	Reduces HC & CO	●	●
Dash pot*2	DP	Reduces HC and CO performance at idle	●	●
Exhaust gas recirculation	EGR	Reduces NOx	●	●
Air suction and fuel system feedback control	—	Maintains air-fuel ratio for TWC and reduces HC, CO and NOx	—	●
Air suction	AS	Reduces HC & CO	●	—
Three-way catalyst	TWC	Reduces HC, CO & NOx	—	●
Oxidation catalyst	OC	Reduces HC & CO	●	—
High altitude compensation	HAC	Insures air-fuel mixture at high altitude	● (OPT)*3	—
Auxiliary system:				
Automatic hot air intake	HAI	Improves driveability—cold	●	●
Automatic choke	—	Improves driveability—cold	●	●
Choke breaker	CB	Improves driveability—cold	●	●
Choke opener	—	Improves driveability—hot	●	●
Auxiliary acceleration pump	AAP	Improves driveability—cold	●	●
Deceleration fuel cut	—	Prevents overheating OC or TWC, and after burning	●	●
Idle advance	—	Improves fuel economy at idle	●	●
Cold mixture heater	CMH	Improves driveability—cold	●	●

Remarks: *1 M/T vehicles only

*2 A/T vehicles only

*3 Option in USA only, except in California.

A03034

COMPONENT LAYOUT AND SCHEMATIC DRAWING
(Federal and Canada)

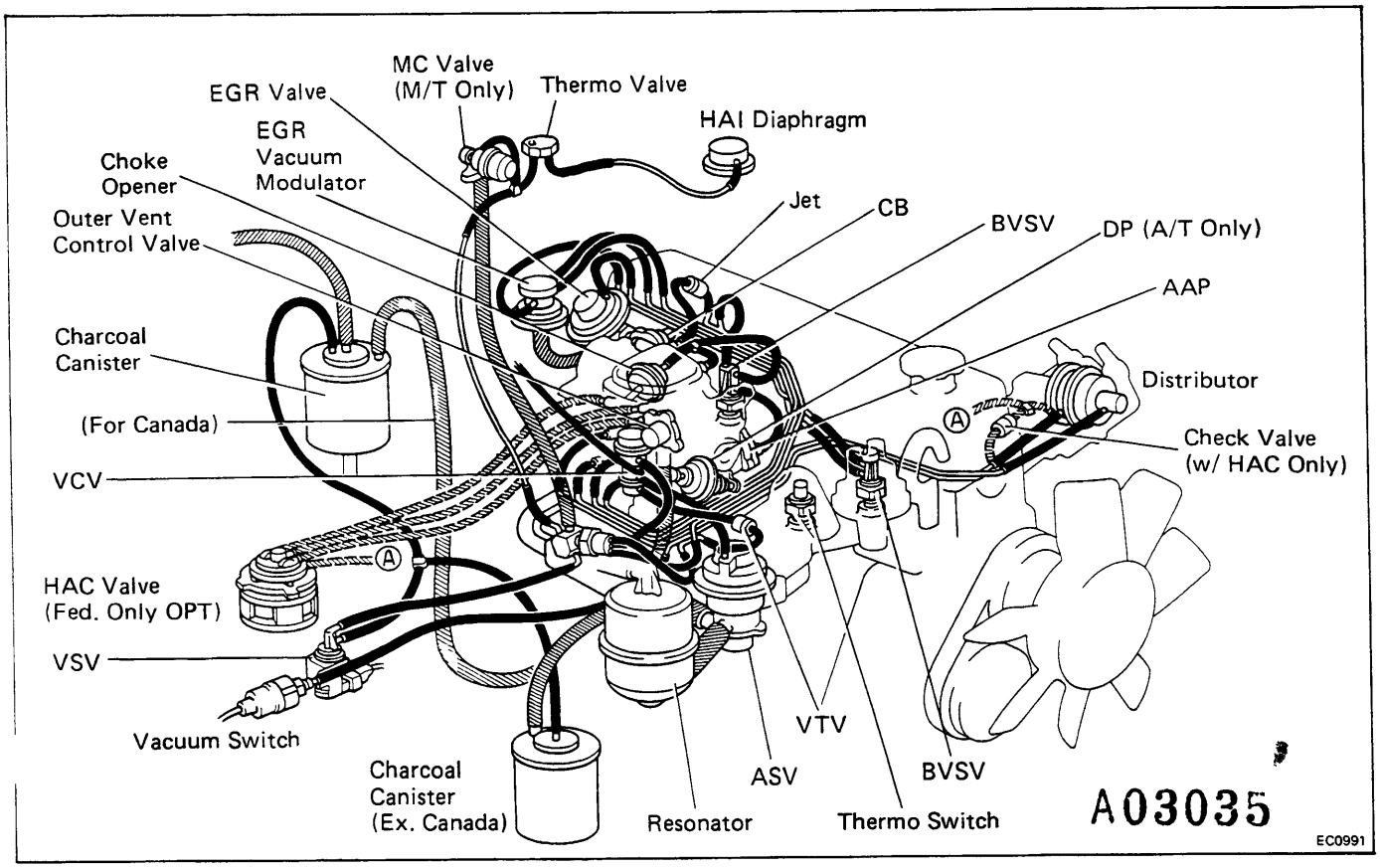

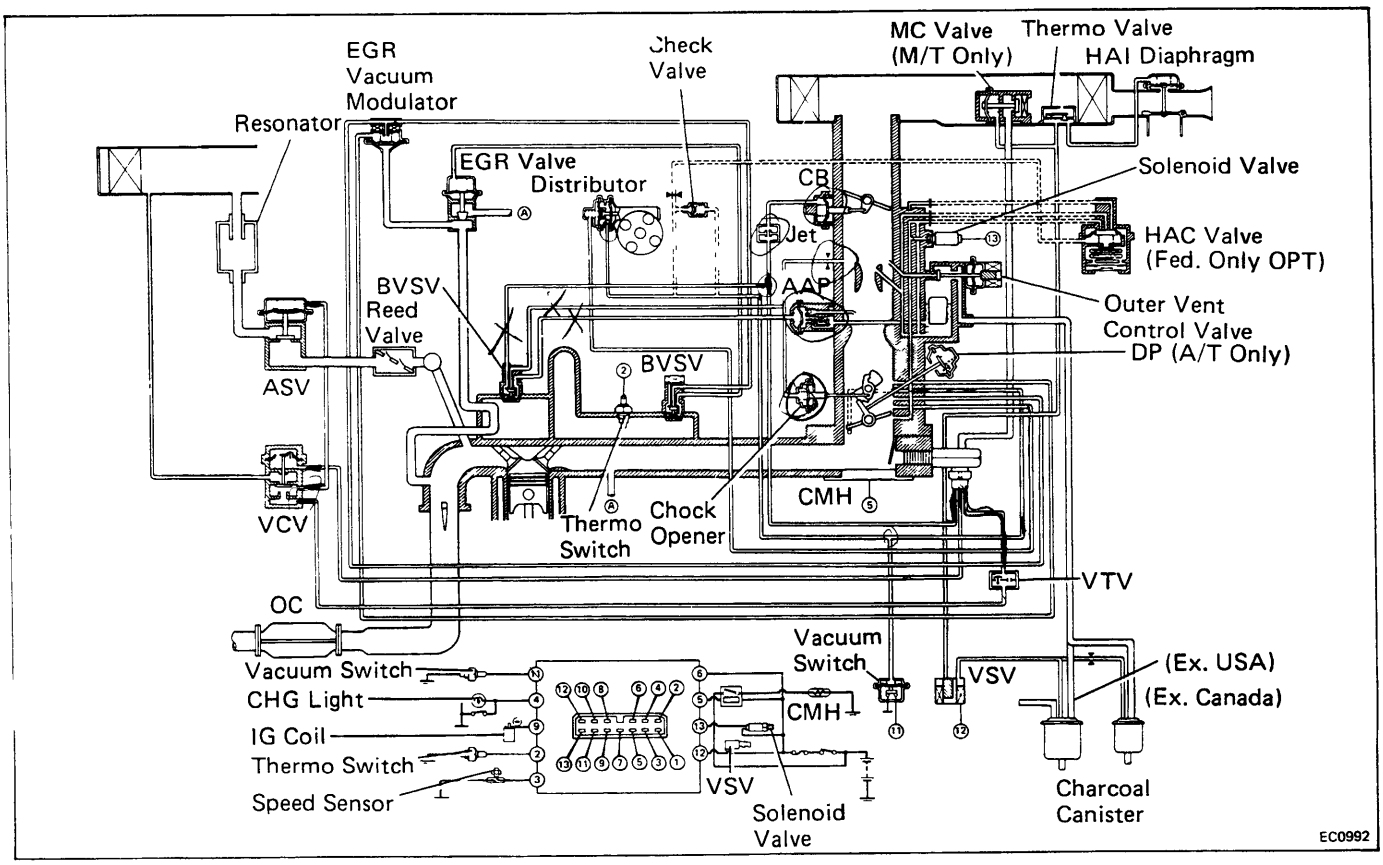

COMPONENT LAYOUT AND SCHEMATIC DRAWING (Californi`

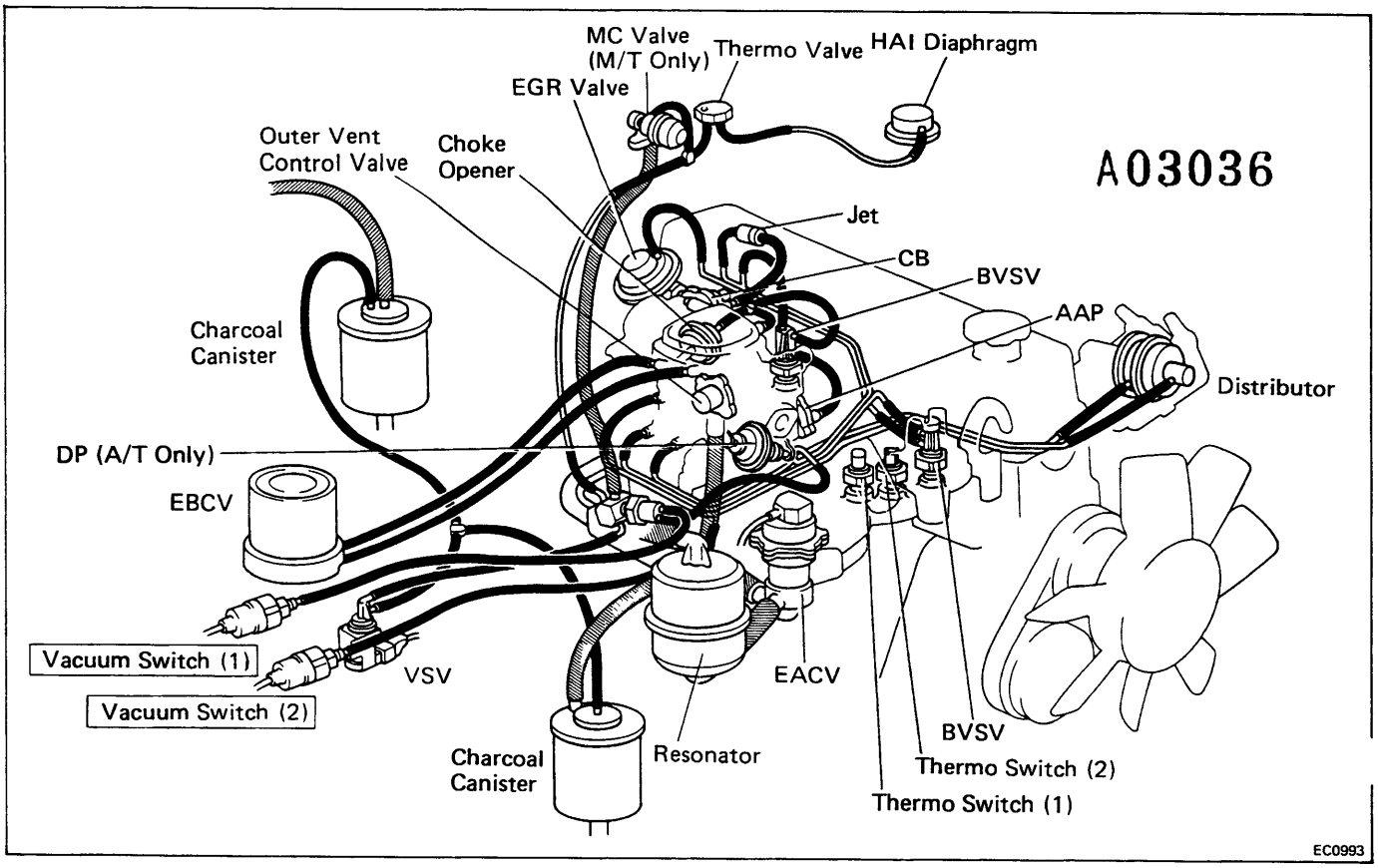

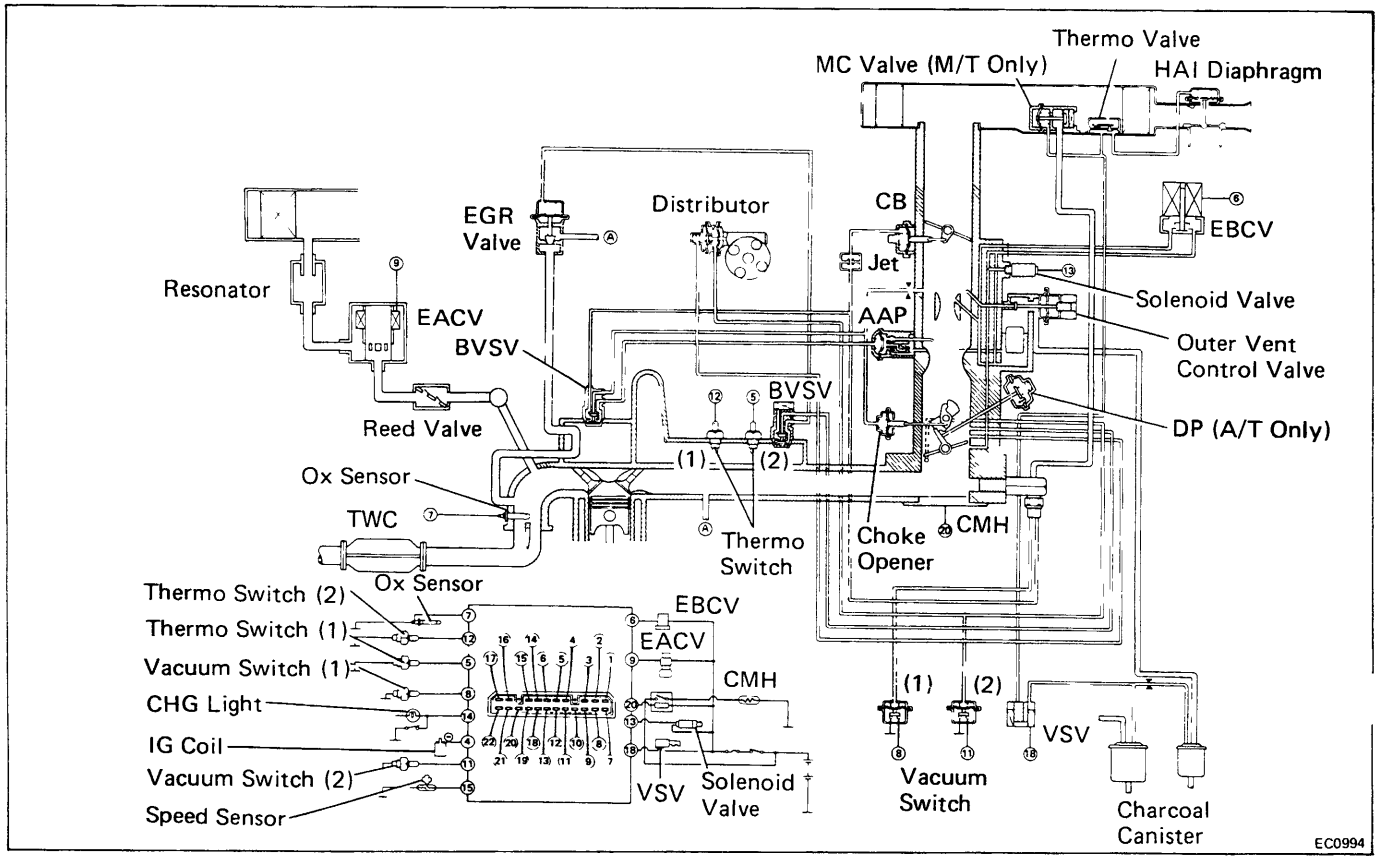

POSITIVE CRANKCASE VENTILATION (PCV) SYSTEM

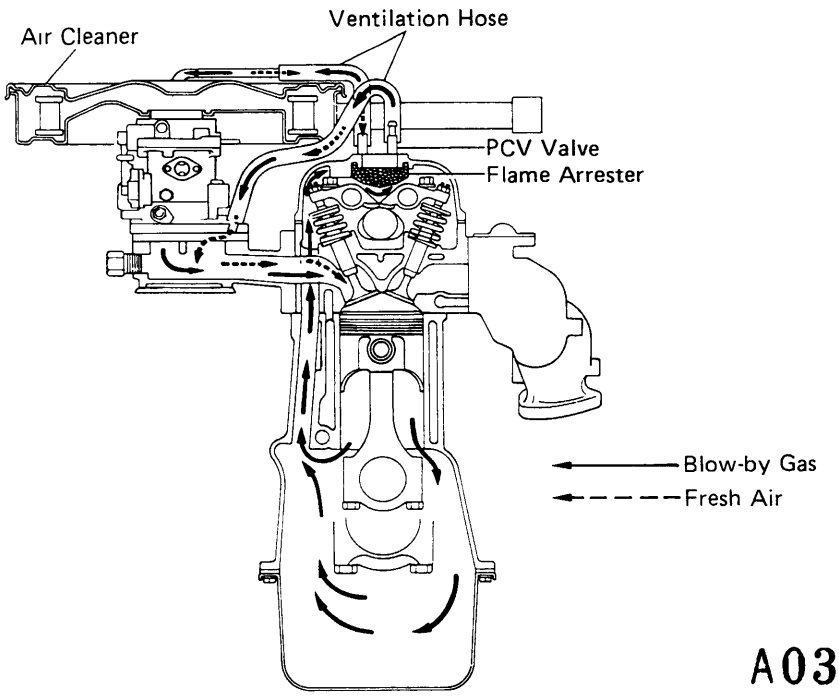

To reduce HC emissions, crankcase blow-by gas (HC) is routed through the PCV valve to the intake manifold for combustion in the cylinders.

Engine not Running or if Backfiring

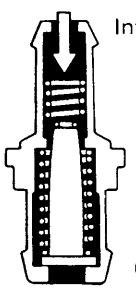

- PCV VALVE IS CLOSED.

Normal Operation

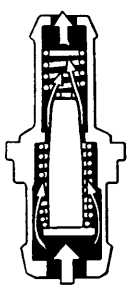

- PCV VALVE IS OPEN.
- VACUUM PASSAGE IS LARGE.

Idling or Decelerating

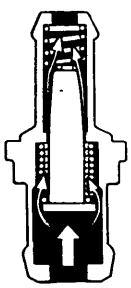

- PCV VALVE IS OPEN.
- VACUUM PASSAGE IS SMALL.

Acceleration of Heavy Load

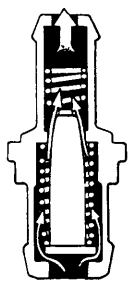

- PCV VALVE IS FULLY OPEN.

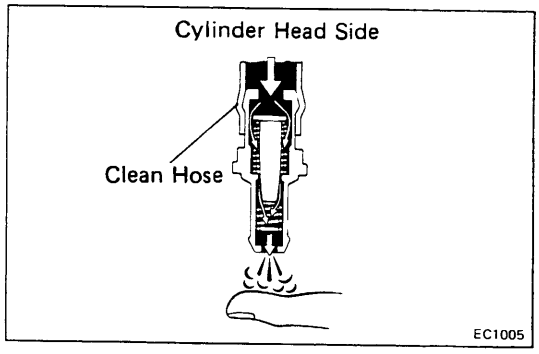

INSPECTION OF PCV VALVE

1. **REMOVE PCV VALVE**
2. **ATTACH CLEAN HOSE TO PCV VALVE**
3. **BLOW FROM CYLINDER HEAD SIDE**
   Check that air passes through easily.
   CAUTION: Do not suck air through the valve. Petroleum substances inside the valve are harmful.

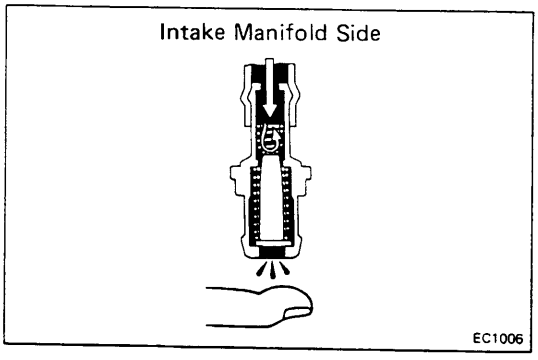

4. **BLOW FROM INTAKE MANIFOLD SIDE**
   Check that air passes through with difficulty.
   If the PCV valve fails either of the checks, replace it.
5. **REINSTALL PCV VALVE**

A03038

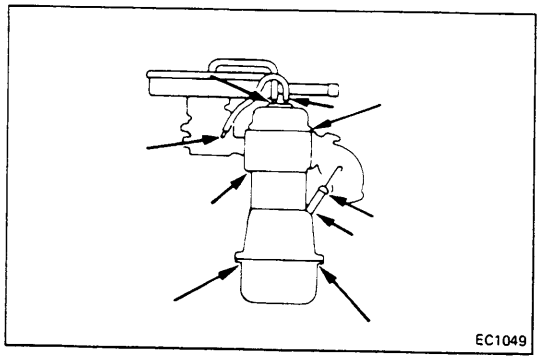

INSPECTION OF PCV HOSES AND CONNECTIONS

VISUALLY INSPECT HOSES, CONNECTIONS AND GASKET

Check for cracks, leaks or damage.

FUEL EVAPORATIVE EMISSION CONTROL (EVAP) SYSTEM

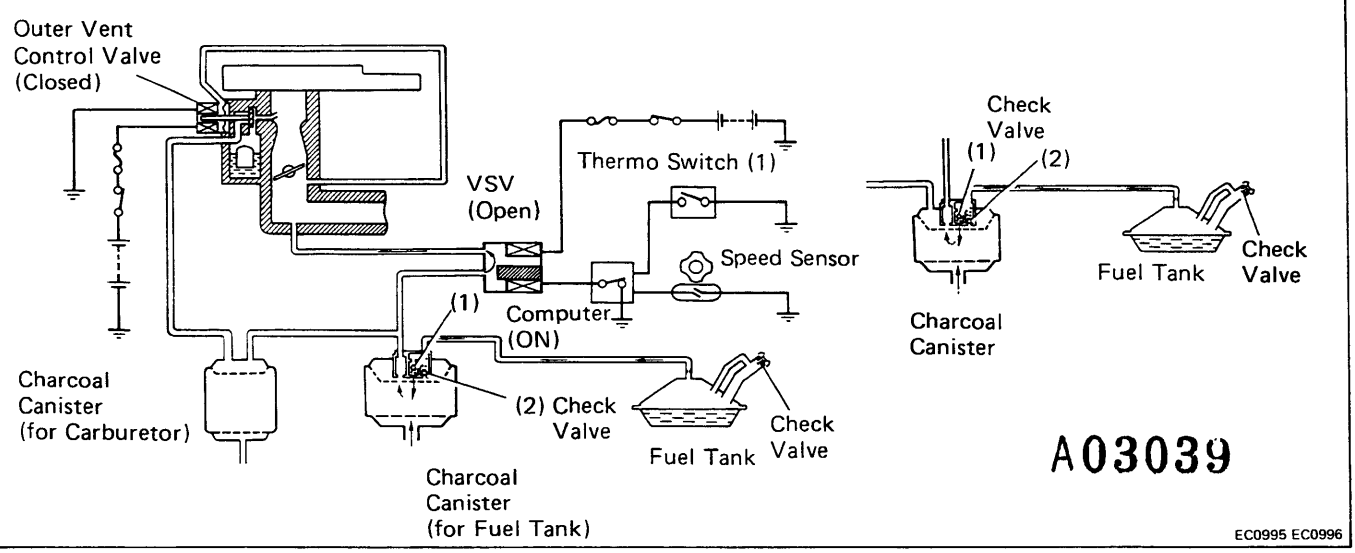

To reduce HC emissions, evaporated fuel from the fuel tank and float chamber is routed through the charcoal canister to the intake manifold for combustion in the cylinders.

IG S/W	Engine	*Outer Vent Control Valve	Coolant Temp.	Thermo S/W (1)	Vehicle Speed	Computer	VSV	Check (1)	Valve (2)	Check Valve in Cap	Evaporated Fuel (HC)
OFF	Not running	OPEN	–	–	–	–	–	–	–	—	HC from tank and float chamber is absorbed into the canister
ON	Running	CLOSED	Below 43°C (109°F)	ON	–	OFF	CLOSED	–	–	–	HC from tank is absorbed into the canister
			Above 55°C (131°F)	OFF	Below 7 mph (11 km/h)	OFF	CLOSED	–	–	–	
					Above 16 mph (25 km/h)	ON	OPEN	–	–	–	HC from canister is led into the intake manifold
High pressure in tank		–	–	–	–	–	–	OPEN	CLOSED	CLOSED	HC from tank is absorbed into the canister.
High vacuum in tank		–	–	–	–	–	–	CLOSED	OPEN	OPEN	Air is led into the tank

Remarks: *The outer vent control valve is pulled by intake manifold vacuum and held by the solenoid. The solenoid itself cannot pull the valve.

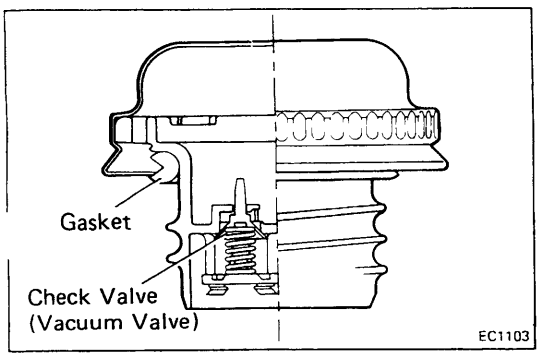

INSPECTION OF FUEL FILLER CAP, FUEL VAPOR LINES AND FUEL TANK

1. VISUALLY INSPECT FUEL FILLER CAP

Look for damaged or deformed gasket and cap.
If a problem is found, repair or replace the cap.

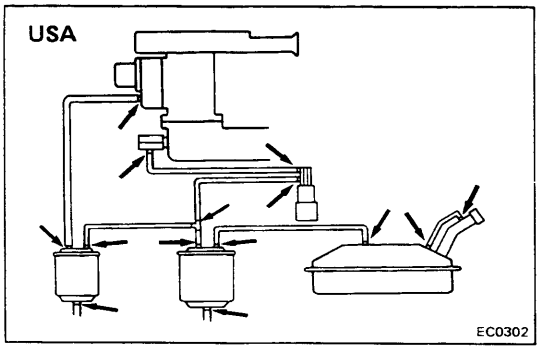

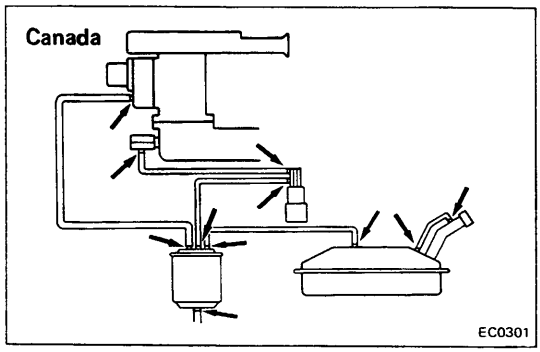

2. **VISUALLY INSPECT LINES AND CONNECTIONS**
   Look for loose connections, sharp bends or damage.

3. **VISUALLY INSPECT FUEL TANK**
   Look for deformation, cracks or fuel leakage.

A03040

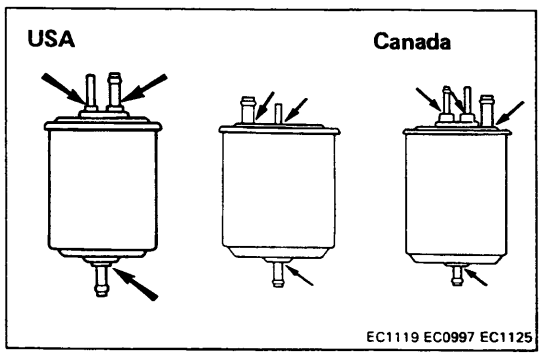

INSPECTION OF CHARCOAL CANISTER(S)

1. **REMOVE CHARCOAL CANISTER(S)**

2. **VISUALLY INSPECT CHARCOAL CANISTER(S)**
   Look for cracks or damage.

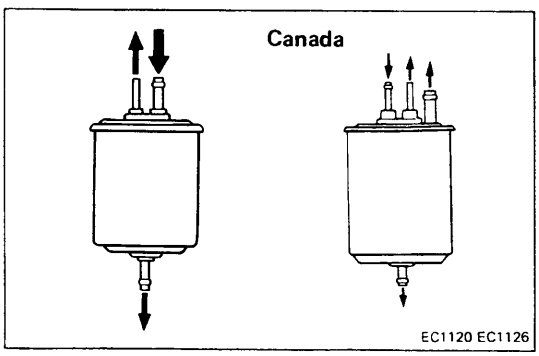

3. **CHECK FOR CLOGGED FILTER AND STUCK CHECK VALVE**
   (a) Using low pressure compressed air, blow into the tank pipe and check that the air flows without resistance from the other pipes.
   (b) Blow into the purge pipe and check that the air flows without resistance from the other pipes.

   If a problem is found, replace the charcoal canister.

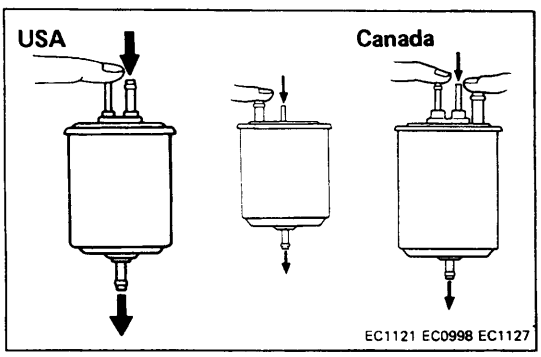

4. **CLEAN FILTER IN CANISTER(S)**
   Clean the filter by blowing 3 kg/cm² (43 psi, 294 kPa) of compressed air into the pipe, while holding the other upper canister pipes closed.

   NOTE:
   - Do not attempt to wash the canister.
   - No activated carbon should come out.

5. **REINSTALL CHARCOAL CANISTER(S)**

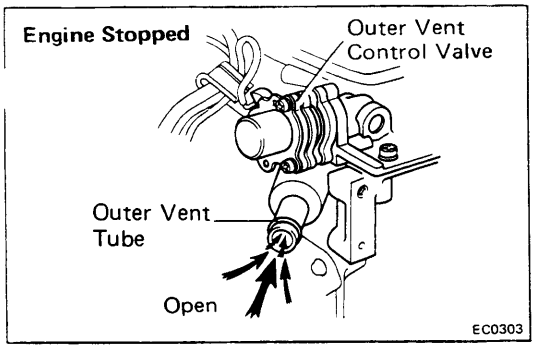

INSPECTION OF OUTER VENT CONTROL VALVE

1. CHECK OUTER VENT CONTROL VALVE OPERATION

(a) Disconnect the outer vent hose from the carburetor.

(b) Blow air into the outer vent pipe and check that the outer vent control valve is open.

A03041

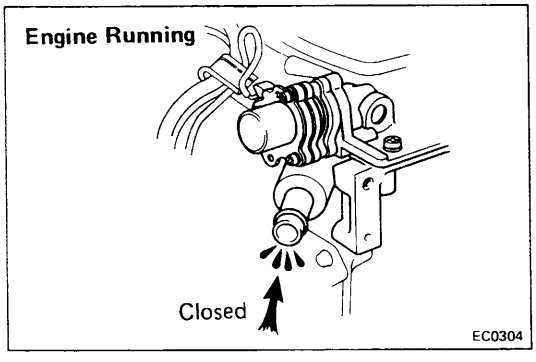

(c) Start the engine.

(d) With the engine idling, blow air into the outer vent pipe and check that the outer vent control valve is closed.

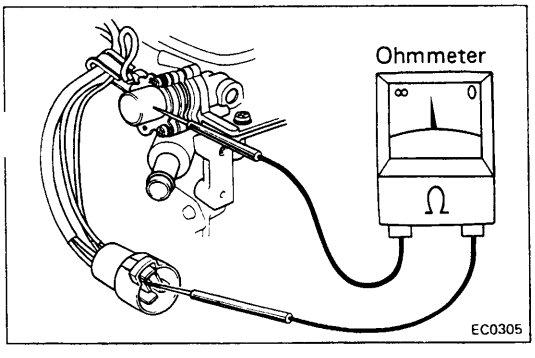

2. CHECK SOLENOID

(a) Unplug the wiring connector.

(b) Using an ohmmeter, measure the resistance between the positive(+) terminal and the solenoid body.

Specified resistance: 63 — 73 Ω at 20°C (68°F)

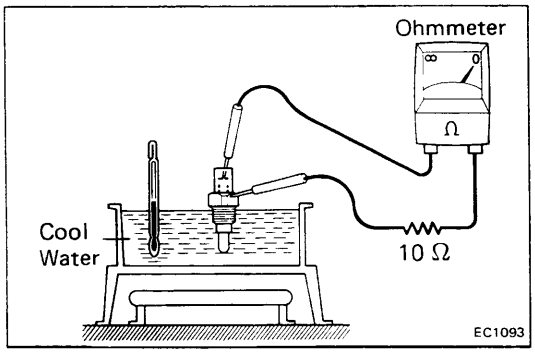

INSPECTION OF THERMO SWITCH (1)

CHECK THERMO SWITCH BY USING OHMMETER

(a) Drain the coolant from the radiator into a suitable container.

(b) Remove the thermo switch from the intake manifold.

(c) Cool the thermo switch to below 43°C (109°F).

(d) Using an ohmmeter, check that there is continuity.

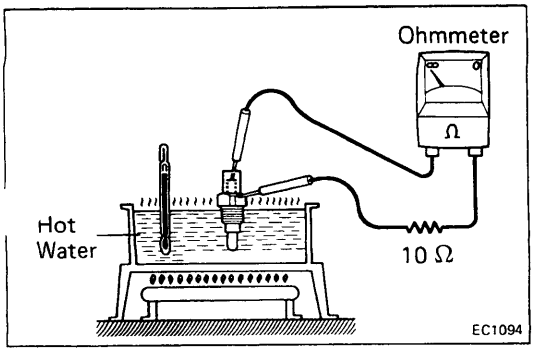

(e) Heat the switch to above 55°C (131°F) with hot water.

(f) Check that there is no continuity.

(g) Apply liquid sealer to the threads of the switch and reinstall.

(h) Fill the radiator with coolant.

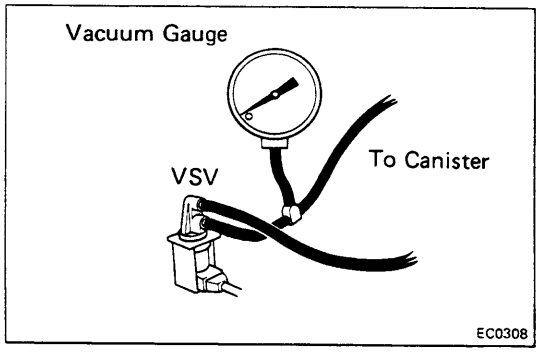

INSPECTION OF SPEED SENSOR TO VSV

1. CONNECT VACUUM GAUGE

(a) Using a 3-way connector, connect the vacuum gauge to the hose between the VSV and canister.

(b) Set the gauge at the driver's seat.

A03042

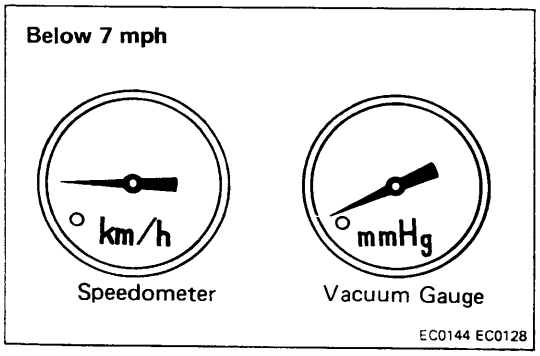

2. PERFORM ROAD TEST, OBSERVING SPEEDOMETER AND VACUUM GAUGE

(a) Warm up the engine.

(b) Check that the vacuum gauge indicates zero at low speed driving (below 7 mph or 11 km/h).

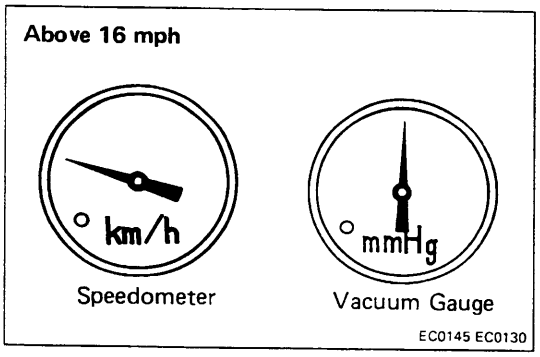

(c) Check that the vacuum gauge indicates intake manifold vacuum at middle and high speed driving (above 16 mph or 25 km/h).

If a problem is found, inspect speed sensor and VSV.

3. REMOVE VACUUM GAUGE AND RECONNECT HOSE

INSPECTION OF VSV

1. CHECK VACUUM CIRCUIT CONTINUITY IN VSV BY BLOWING AIR INTO PIPE

(a) Connect the VSV terminals to the battery terminal as shown.

(b) Blow into a pipe, and check that the VSV is open.

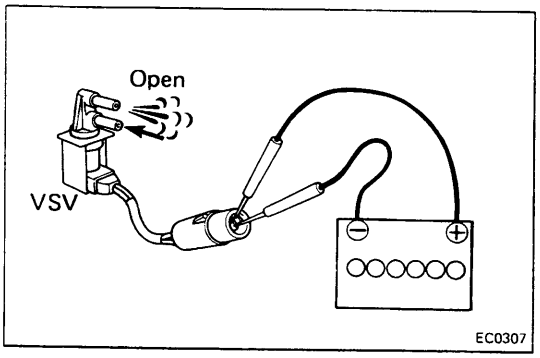

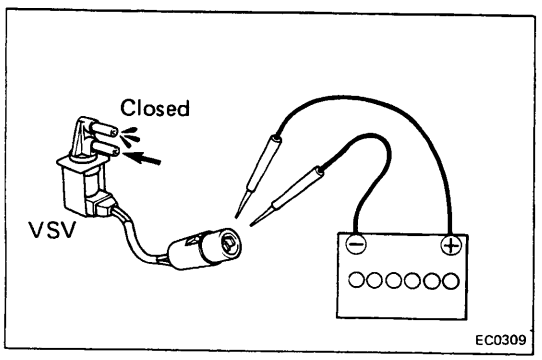

(c) Disconnect the battery positive (+) terminal.

(d) Blow into a pipe and check that the VSV is closed.

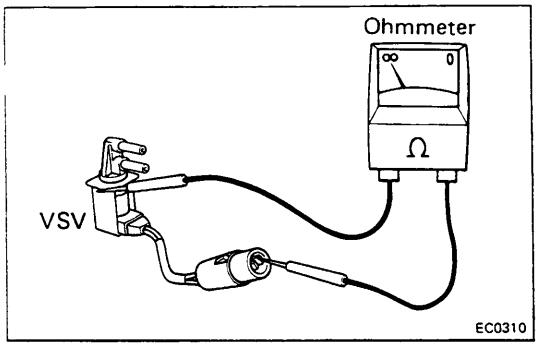

2. **CHECK FOR SHORT CIRCUIT**

Using an ohmmeter, check that there is no continuity between the positive (+) terminal and the VSV body. If a short circuit is found, repair or replace the VSV.

A03043

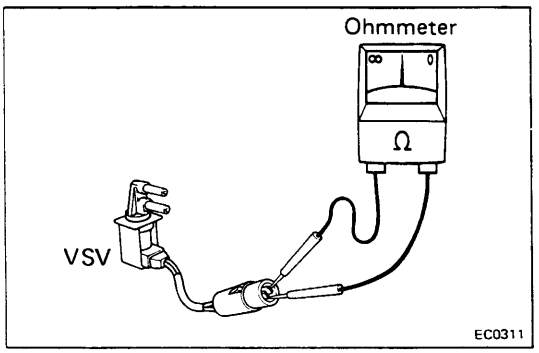

3. **CHECK FOR OPEN CIRCUIT**

Using an ohmmeter, measure the resistance between the positive (+) terminal and the other terminals as shown.

Specified resistance: 38 — 44 Ω at 20°C (68°F)

If the resistance is not within specification, replace the VSV.

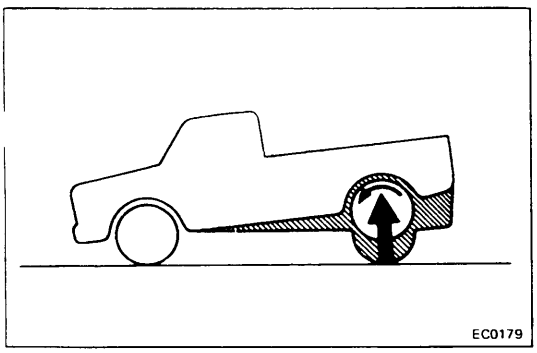

INSPECTION OF SPEED SENSOR

1. **JACK UP ONE REAR WHEEL TO CLEAR GROUND AND CHOCK FRONT WHEELS**
2. **RELEASE PARKING BRAKE**
3. **SET SHIFT LEVER INTO NEUTRAL**
4. **UNPLUG WIRING CONNECTOR FROM COMPUTER**

Computer location: Left Cowl Side

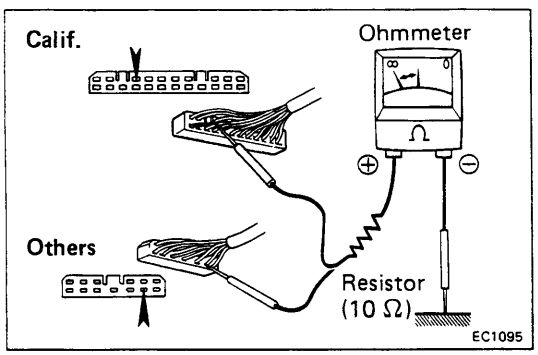

5. **CHECK ON-OFF CYCLES OF SPEED SENSOR**

(a) Place the positive (+) terminal of the ohmmeter on the wiring connector terminal and the negative (—) terminal on ground.

(b) Turn the rear wheel slowly.

(c) Check that the ohmmeter needle deflects consistently

CAUTION: The ohmmeter probe should be inserted from the rear side of the connector.

If the ohmmeter needle does not deflect, check that the speed sensor terminals at the back side of the speedometer air properly connected. If the connection is OK, replace the speedometer assembly.

6. **RECONNECT WIRING CONNECTOR TO COMPUTER**

MIXTURE CONTROL (MC) SYSTEM (M/T Vehicles Onl

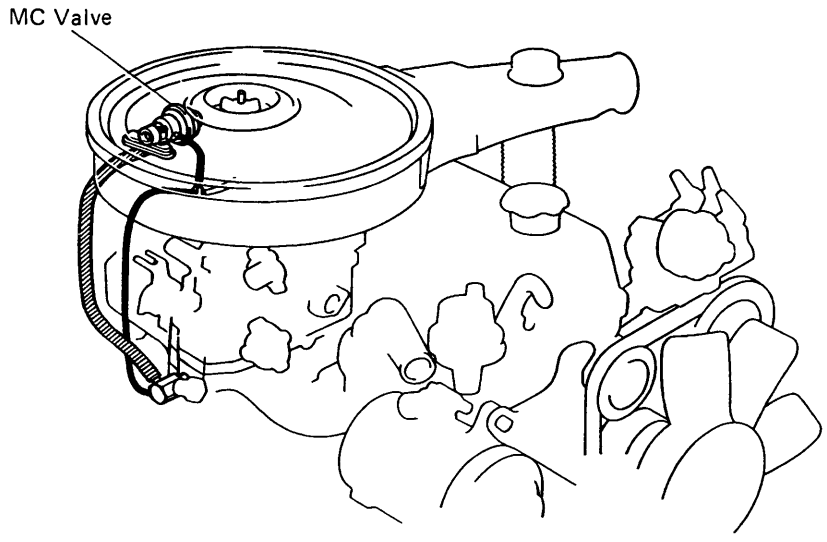

A03044

EC0312

CONSTANT RPM

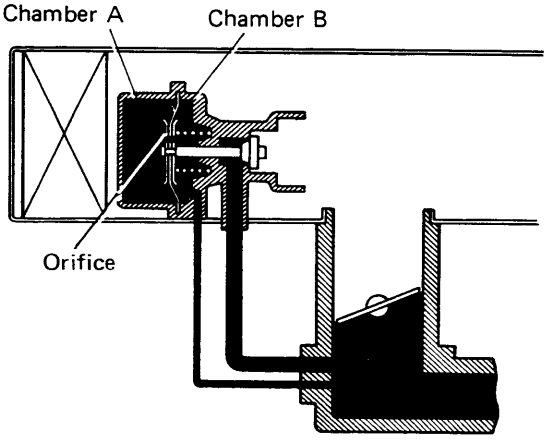

EC0313

SUDDEN DECELERATION, STEP (1)

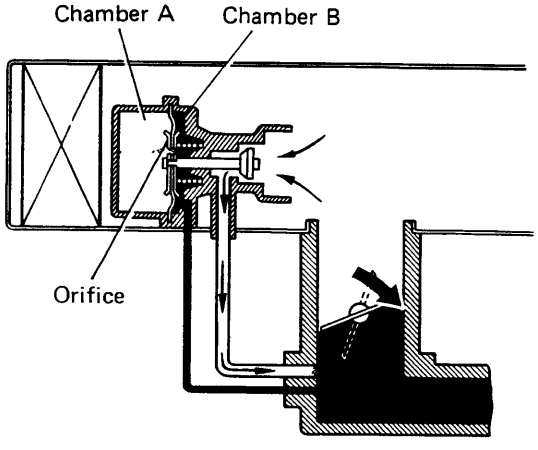

EC0314

To reduce HC and CO emissions, this system allows air to enter the intake manifold on sudden deceleration.

Condition		Vacuum in Chambers A and B	MC Valve	Fresh Air
Constant RPM		Same vacuum	CLOSED	No air flow
Sudden deceleration	Step (1)	High vacuum acts on chamber B	OPEN	Air is routed through MC valve to intake manifold.
	Step (2)	After a few seconds, vacuum in both chambers equalizes through the orifice.	CLOSED	No air flow

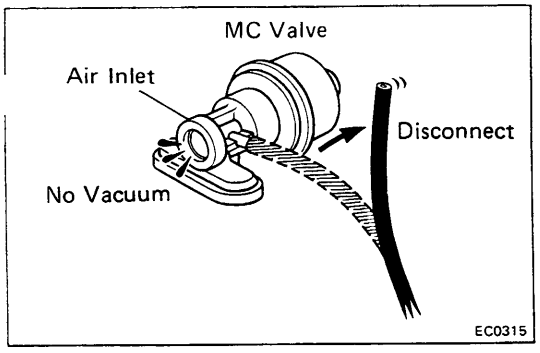

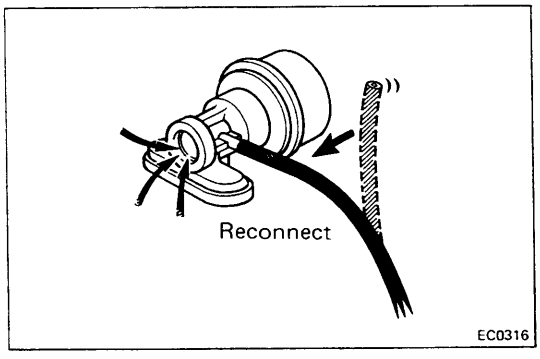

INSPECTION OF MC SYSTEM

1. **REMOVE AIR CLEANER COVER AND AIR FILTER**
2. **START ENGINE**
3. **CHECK MC VALVE**
   (a) Disconnect the vacuum hose from the MC valve.
   (b) Place your fingers over the air inlet of the MC valve.
   (c) Check that vacuum is not felt.
   (d) Reconnect the vacuum hose and check that vacuum is felt momentarily.

   NOTE: At this time, the engine will idle rough or die, but this is normal.
4. **REINSTALL AIR FILTER AND CLEANER COVER**

A03045

DASH POT (DP) SYSTEM (A/T Vehicles Only)

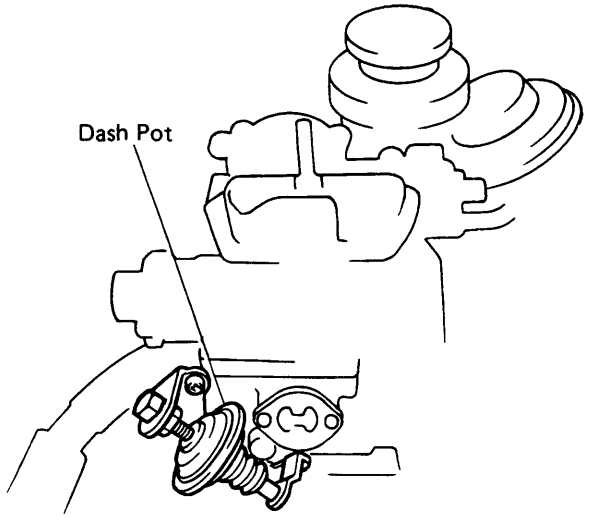

EC1187

Normal Driving

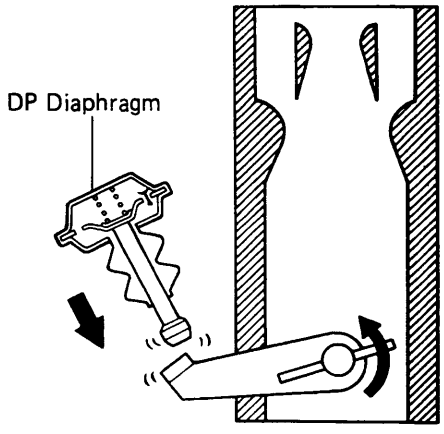

EC1188

Deceleration

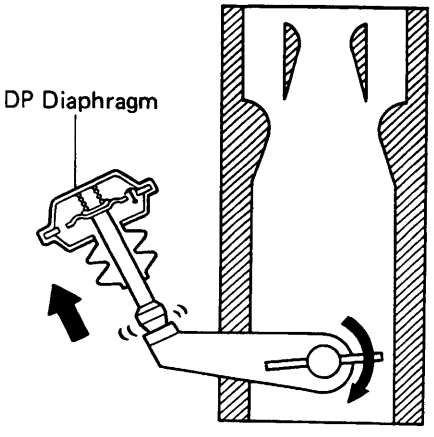

EC1189

To reduce HC and CO emissions, when decelerating the dash pot opens the throttle valve slightly more than at idle. This causes the air-fuel mixture to burn completely.

Condition	DP Diaphragm	Throttle Valve
Idling	Pushed in by return force of throttle valve	Idle speed position
Normal driving	Pushed out by diaphragm spring	High speed position
Deceleration	Pushed in by return force of throttle valve	Slightly opens and then slowly closes to idle position

INSPECTION OF DP SYSTEM

1. WARM UP ENGINE

2. CHECK IDLE SPEED AND ADJUST, IF NECESSARY

A03047

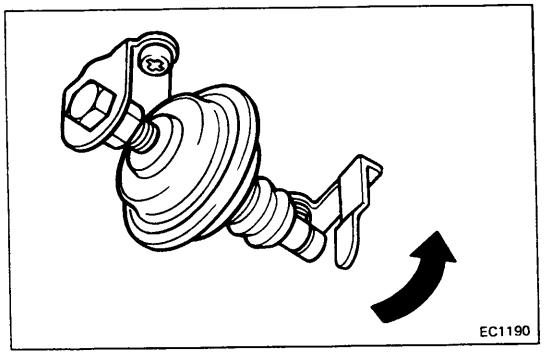

3. CHECK DP SETTING SPEED

(a) Open the throttle valve untill the throttle lever separates from the DP end.

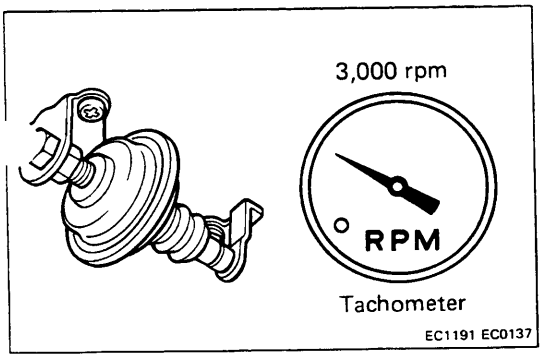

(b) Release the throttle valve gradually, and check the DP setting speed when the throttle lever touches the DP end.

DP setting speed: 3,000 rpm

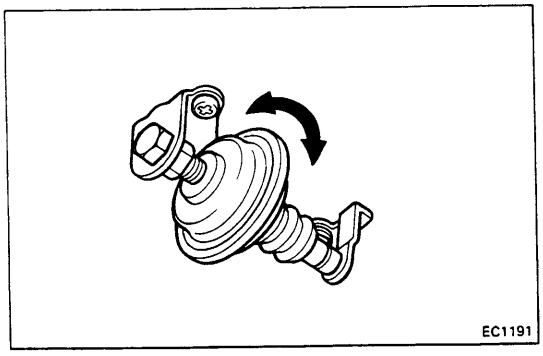

If the speed is not as specified, unlock the lock nut, and adjust the setting speed by turnning the DP diaphragm.

EXHAUST GAS RECIRCULATION (EGR) SYSTEM (Federal and Canad

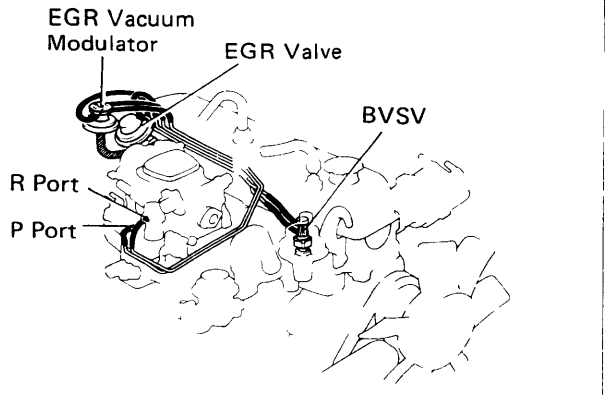

EC0328

(1)

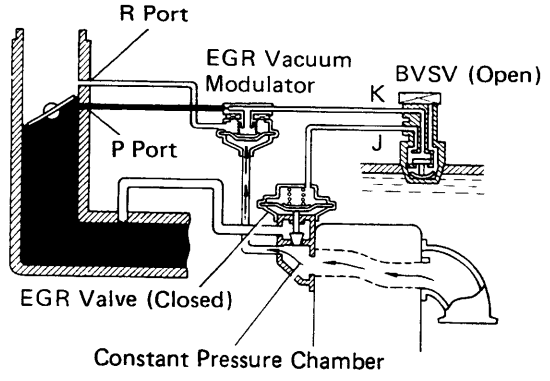

EC0329

(2)

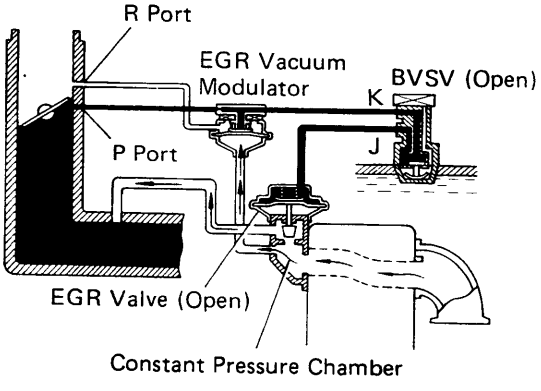

EC0330

(3)

A03048

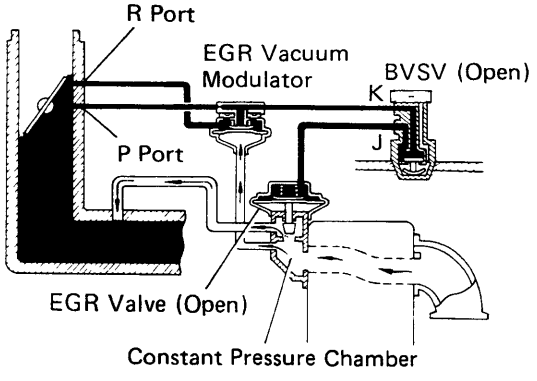

EC0331

To reduce NOx emission, part of the exhaust gases are recirculated through the EGR valve to the intake manifold to lower the maximum combustion temperature.

Coolant Temp.	BVSV	Throttle Valve Opening Angle	Pressure in the EGR Valve Pressure Chamber		EGR Vacuum Modulator	EGR Valve	Exhaust Gas
Below 30°C (86°F)	CLOSED (J-K)	—	—		—	CLOSED	Not recirculated
Above 44°C (111°F)	OPEN (J-K)	Positioned below EGR port	—		—	CLOSED	Not recirculated
		Positioned between P port & R port	(1) LOW	*Pressure constantly alternating between low and high	OPENS passage to atmosphere	CLOSED	Not recirculated
			(2) HIGH		CLOSES passage to atmosphere	OPEN	Recirculated
		Positioned above EGR R port	(3) HIGH	**	CLOSES passage to atmosphere	OPEN	Recirculated (increase)

Remarks: *Pressure increase→Modulator closes→EGR valve opens→Pressure drops→EGR valve closes←Modulator opens←

**When the throttle valve is positioned above the R port, the EGR vacuum modulator will close the atmosphere passage and open the EGR valve to increase the EGR gas, even if the exhaust pressure is insufficiently low.

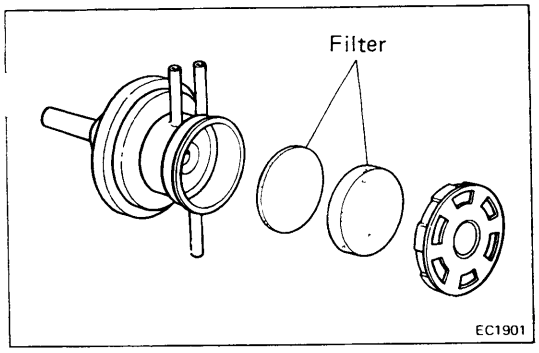

INSPECTION OF EGR SYSTEM

1. CHECK AND CLEAN FILTER IN EGR VACUUM MODULATOR

(a) Check the filter for contamination or damage.

(b) Using compressed air, clean the filter.

A03049

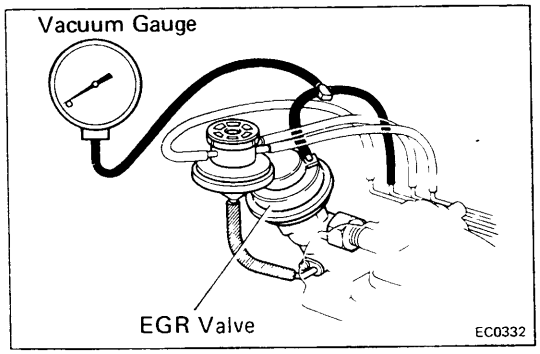

2. PREPARATION

Using a 3-way connector, connect a vacuum gauge to the hose between the EGR valve and vacuum pipe.

3. CHECK SEATING OF EGR VALVE

Start the engine and check that the engine starts and runs at idle.

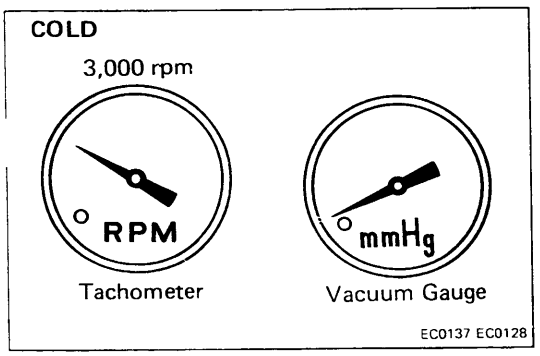

4. CHECK BVSV WITH COLD ENGINE

(a) The coolant temperature should be below 30°C (86°F).

(b) Check that the vacuum gauge indicates zero at 3,000 rpm.

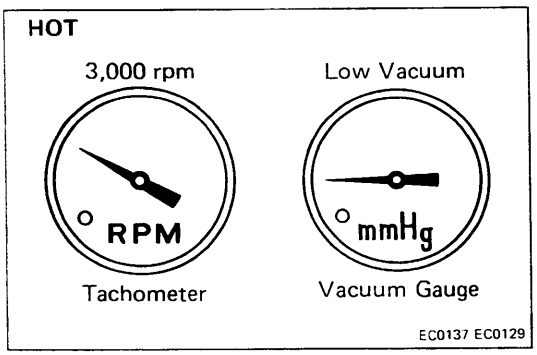

5. CHECK BVSV, VSV AND EGR VACUUM MODULATOR WITH HOT ENGINE

(a) Warm up the engine.

(b) Check that the vacuum gauge indicates low vacuum at 3,000 rpm.

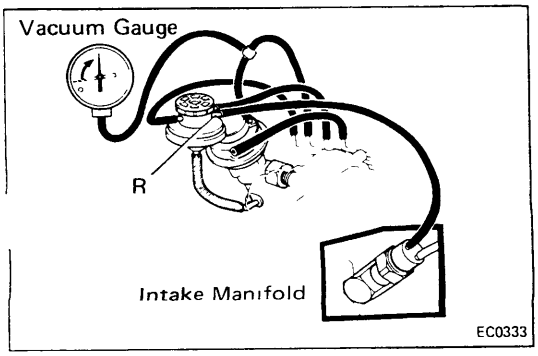

(c) Disconnect the vacuum hose from port R of the EGR vacuum modulator and connect port R directly to the intake manifold with another hose.

(d) Check that the vacuum gauge indicates high vacuum at 3,000 rpm.

NOTE: As a large amount of EGR gas enters, the engine will misfire slightly at this time.

(e) Disconnect the vacuum gauge and reconnect the vacuum hoses to the proper locations.

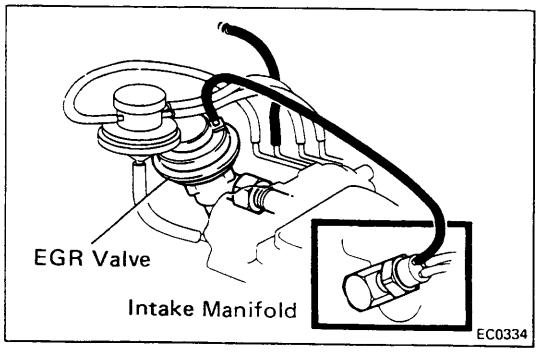

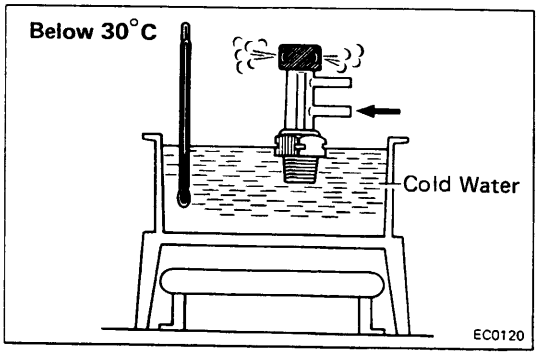

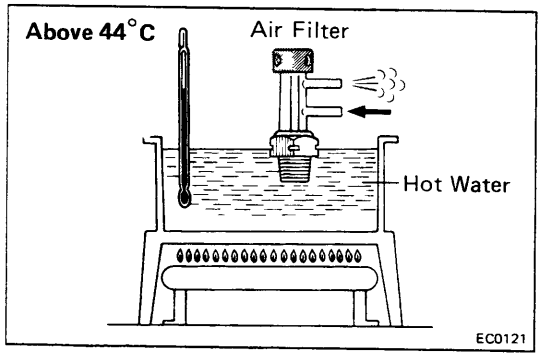

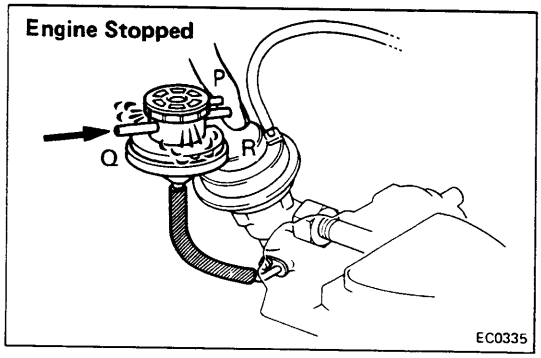

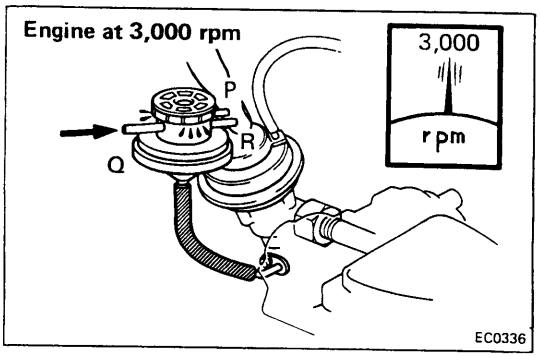

6. CHECK EGR VALVE

(a) Apply vacuum directly to the EGR valve with the engine idling.

(b) Check that the engine runs rough or dies.

(c) Reconnect the vacuum hoses to the proper locations.

IF NO PROBLEM IS FOUND WITH THIS INSPECTION, THE SYSTEM IS OKAY; OTHERWISE INSPECT EACH PART

A03050

INSPECTION OF BVSV

CHECK BVSV BY BLOWING AIR INTO PIPE

(a) Drain the coolant from the radiator into a suitable container.

(b) Remove the BVSV.

(c) Cool the BVSV to below 30°C (86°F) with cool water.

(d) Blow air into a pipe and check that the BVSV is closed.

(e) Heat the BVSV to above 44°C (111°F) with hot water.

(f) Blow air into a pipe and check that the BVSV is open.

(g) Apply liquid sealer to the threads of the BVSV a reinstall.

(h) Fill the radiator with coolant.

If a problem is found, replace the BVSV.

INSPECTION OF EGR VACUUM MODULATOR

CHECK EGR VACUUM MODULATOR OPERATION

(a) Disconnect the vacuum hoses from port P, Q and R of the EGR vacuum modulator.

(b) Plug port P and R with your finger.

(c) Blow air into port Q. Check that the air passes through to the air filter side freely.

(d) Start the engine and maintain the speed at 3,000 rpm.

(e) Repeat the above test. Check that there is a strong resistance to air flow.

(f) Reconnect the vacuum hoses to the proper locations.

INSPECTION OF EGR VALVE

1. REMOVE EGR VALVE

Check the valve for sticking and heavy carbon deposi
If a problem is found, replace it.

2. INSTALL EGR VALVE WITH A NEW GASKET

EXHAUST GAS RECIRCULATION (EGR) SYSTEM (California)

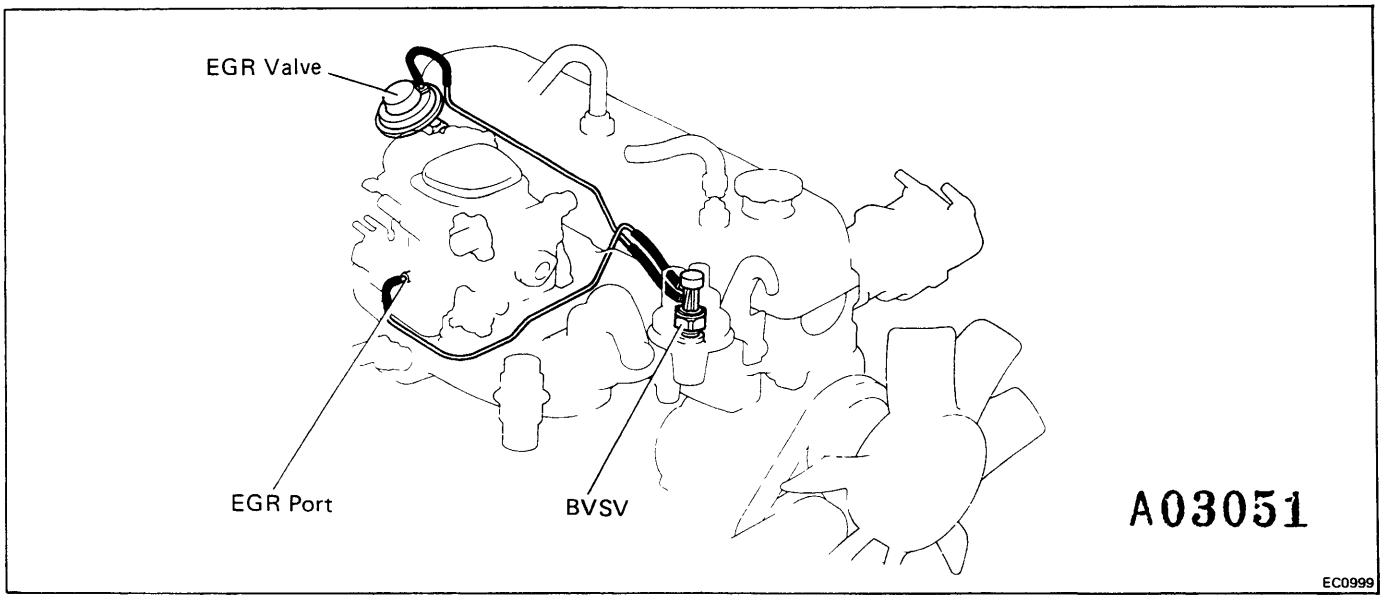

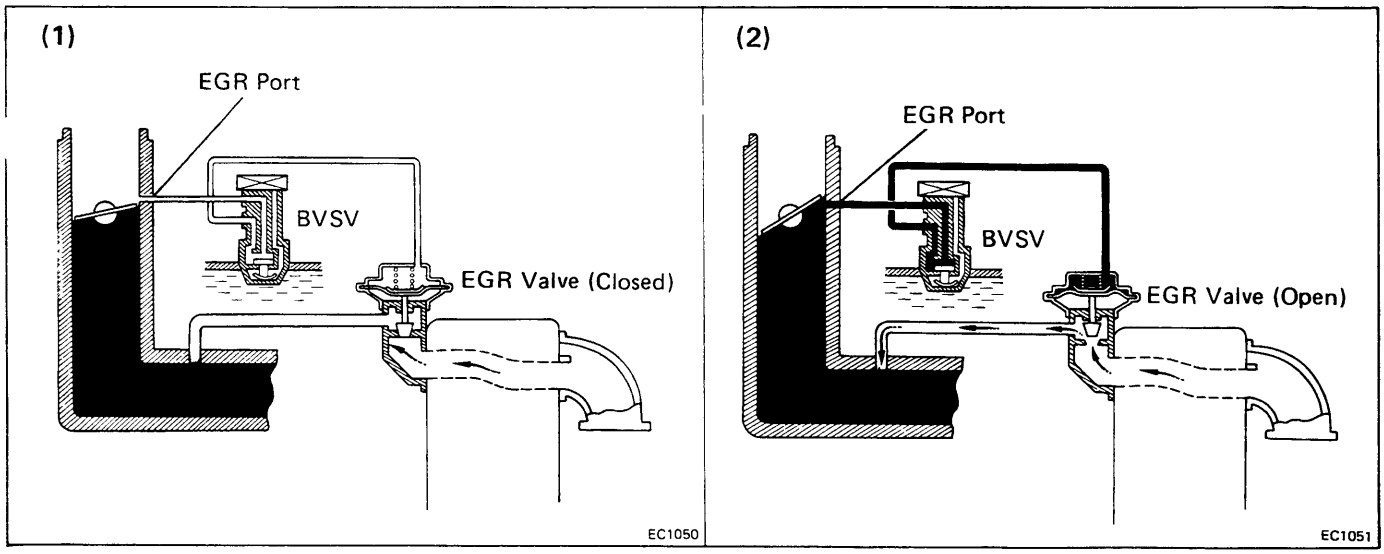

To reduce NOx emission, part of the exhaust gases are recirculated through the EGR valve to the intake manifold to lower the maximum combustion temperature.

Coolant Temp.	BVSV	Throttle Valve Opening Angle	EGR Valve	Exhaust Gas
Below 30°C (86°F)	CLOSED (J-K)	—	CLOSED	Not recirculated
Above 44°C (111°F)	OPEN (J-K)	Positioned below EGR port	CLOSED	Not recirculated
		Positioned above EGR port	OPEN	Recirculated


EC1192

INSPECTION OF EGR SYSTEM

1. PREPARATION

(a) Disconnect the hose from the distributor main diaphragm, and plug the hose end.

A03052

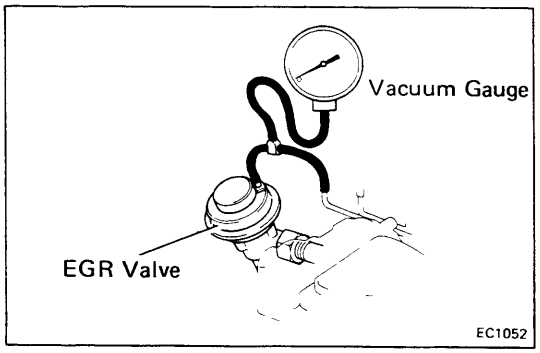

EC1052

(b) Using a 3-way connector, connect a vacuum gauge to the hose between the EGR valve and EGR vacuum pipe.

2. CHECK SEATING OF EGR VALVE

Start the engine and check that the engine starts and runs at idle.

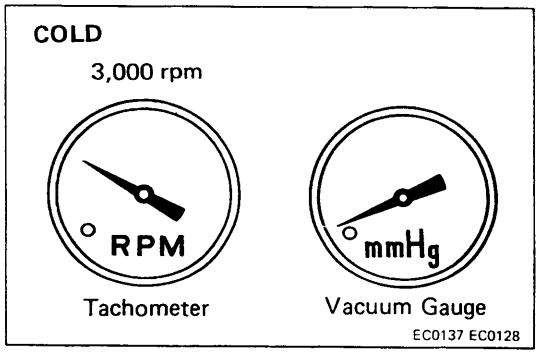

EC0137 EC0128

3. CHECK BVSV WITH COLD ENGINE

(a) The coolant temperature should be below 30°C (86°F).

(b) Check that the vacuum gauge indicates zero at 3,0r rpm.

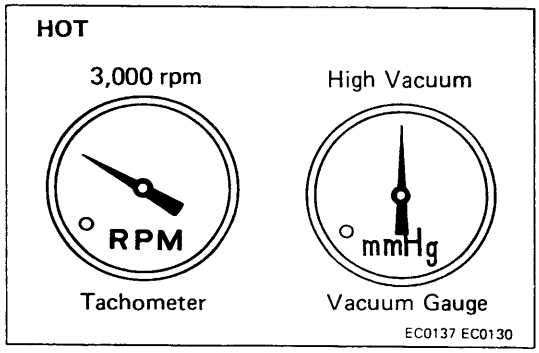

EC0137 EC0130

4. CHECK BVSV AND EGR VACUUM MODULATOR WITH HOT ENGINE

(a) Warm up the engine.

(b) Check that the vacuum gauge indicates high vacuum at 3,000 rpm.

(c) Disconnect the vacuum gauge and reconnect the vacuum hose to the proper location.

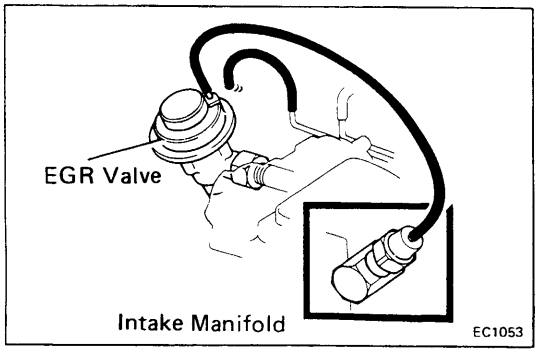

EC1053

5. CHECK EGR VALVE

(a) Apply vacuum directly to the EGR valve with the engine idling.

(b) Check that the engine runs rough or dies.

(c) Reconnect the vacuum hoses to the proper locations.

IF NO PROBLEM IS FOUND WITH THIS INSPECTION, THE SY. TEM IS OKAY; OTHERWISE INSPECT EACH PART

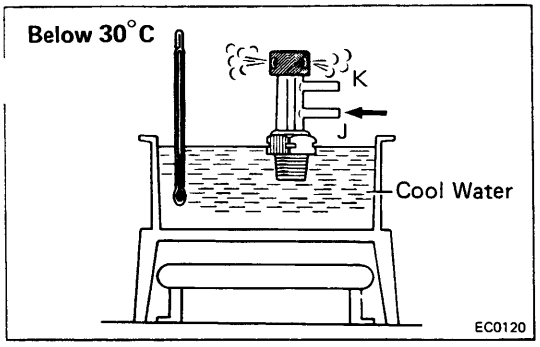

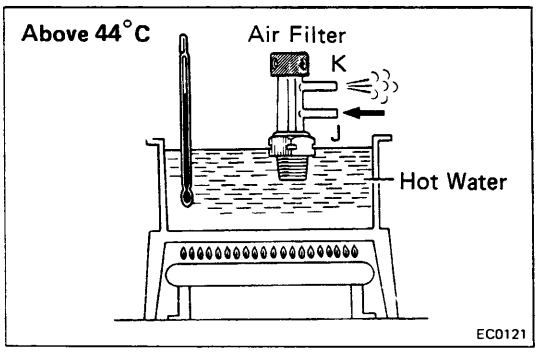

INSPECTION OF BVSV

CHECK BVSV BY BLOWING AIR INTO PIPE

(a) Drain the coolant from the radiator into a suitable container.

(b) Remove the BVSV.

(c) Cool the BVSV to below 30°C (86°F).

(d) Check that air flows from pipe J to the air filter.

(e) Heat the BVSV to above 44°C (111°F).

(f) Check that air flows from pipe J to pipe K.

(g) Apply liquid sealer to the threads of the BVSV and reinstall.

(h) Fill the radiator with coolant.

If a problem is found, replace the BVSV.

A03053

INSPECTION OF EGR VALVE

1. REMOVE EGR VALVE

Check the valve for sticking and heavy carbon deposits. If a problem is found, replace it.

2. INSTALL EGR VALVE WITH NEW GASKET

AIR SUCTION AND FUEL SYSTEM FEEDBACK CONTROL SYSTEM (Californi..)

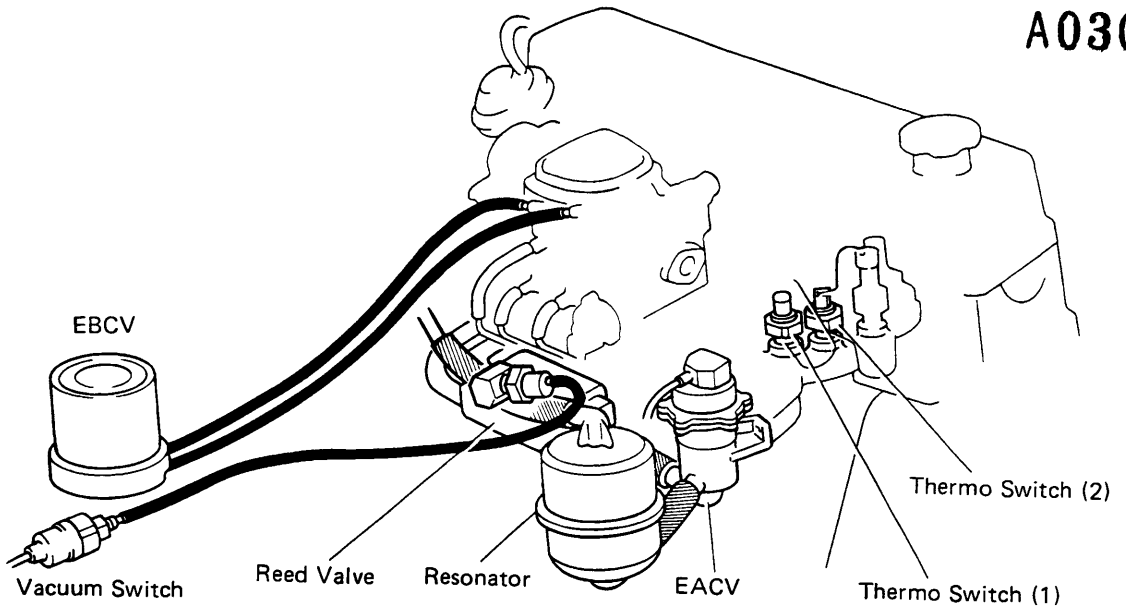

EC1097

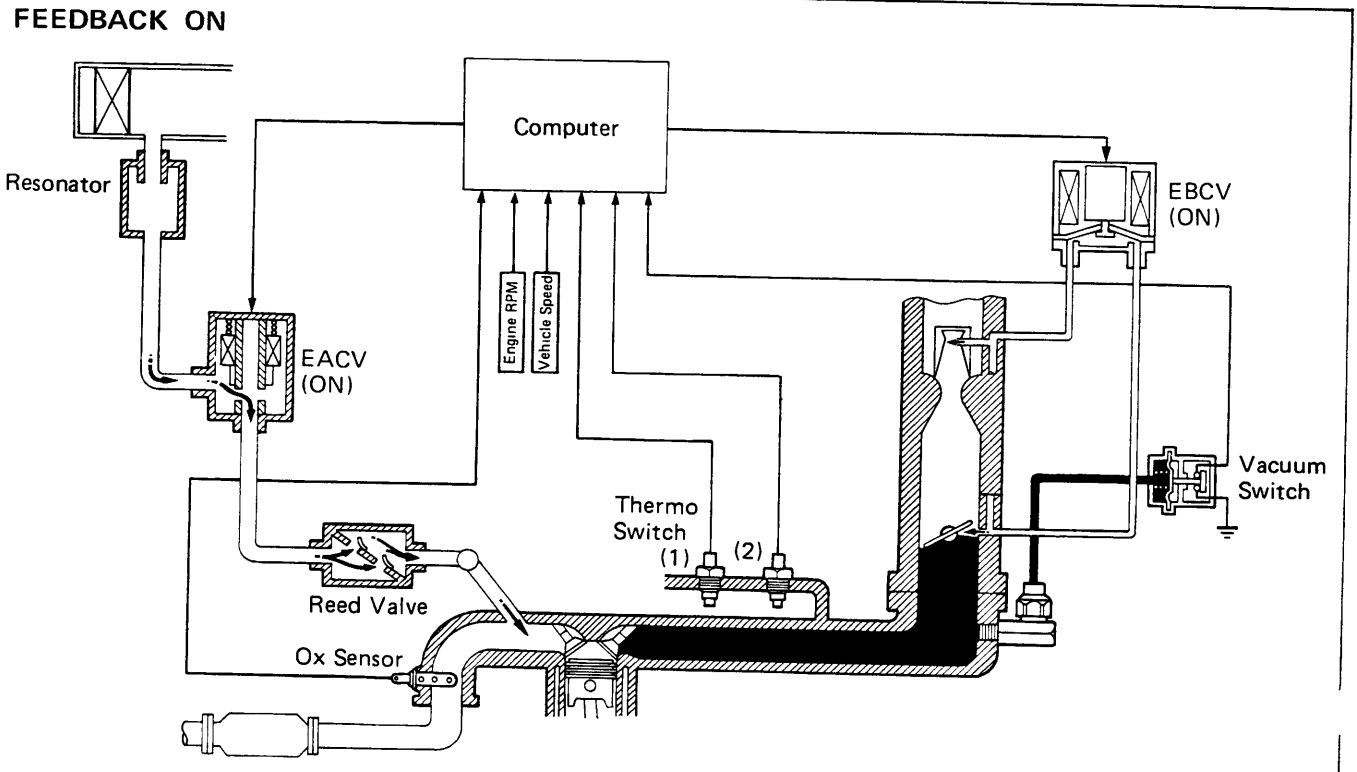

EC1098

FEEDBACK OFF

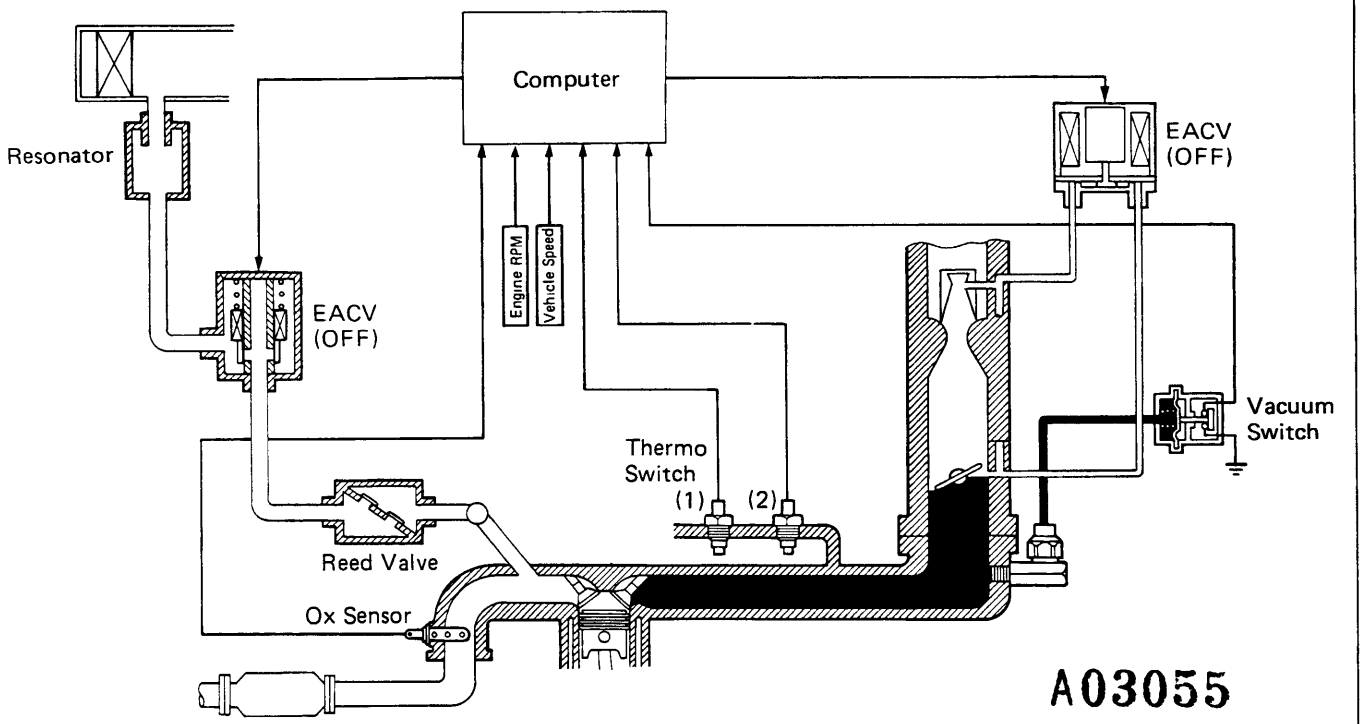

To maintain a stoichiometric air/fuel ratio in order to simultaneously reduce HC, CO and NO_x emissions by the three-way catalyst, consist of the fuel system feedback control system and air suction feedback system.

	*Vacuum Switch	Coolant Temp.	Thermo Switch (1)	Thermo Switch (2)	Engine RPM	Vehicle Speed	**Ox Sensor Signal	EACV	AS	
AS System Feedback Control System	OFF	—	—	—	—	—	—	CLOSED	OFF	
	ON	Below 6°C (43°F)	ON	ON	—	—	—			
		Between 18 — 44°C (64 — 111°F)		OFF	—	—	—	Always OPEN	Always ON	
		Above 55°C (131°F)	OFF		Below 1,000 rpm	Below 7 mph(11 km/h)	—			
						Above 16mph(26km/h)	RICH	OPEN	ON	***Feed BACK
					Above 1,390 rpm	—	LEAN	CLOSED	OFF	

	*Vacuum Switch	**Ox Sensor Signal	EBCV	Fuel Control System	
Fuel System Feedback Control System	OFF	—	CLOSED	OFF	
	ON	RICH	OPEN	ON	***Feedback
		LEAN	CLOSED	OFF	

Remarks:
* By means of vacuum switch, detects heavy load driving condition.
** Signal of air-fuel ratio of inlet gas for TWC.
*** By means of Ox sensor, detects oxygen concentration in exhaust manifold after combusion. If air-fuel ratio is rich for TWC, opens EACV and EBCV. If lean, closes EACV and EBCV.

Air-fuel ratio RICH → O_x sensor RICH → EACV, EBCV open
EACV, EBCV close ← O_x sensor LEAN ← Air-fuel ratio LEAN

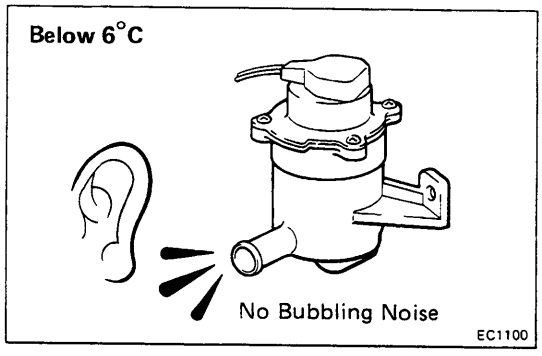

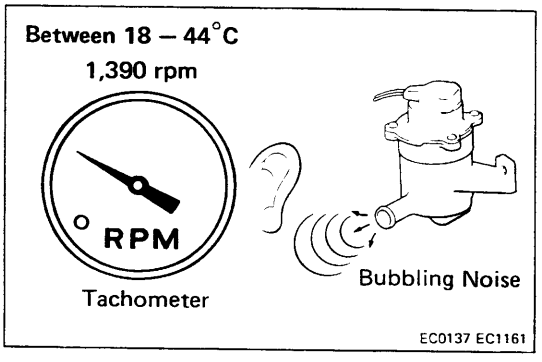

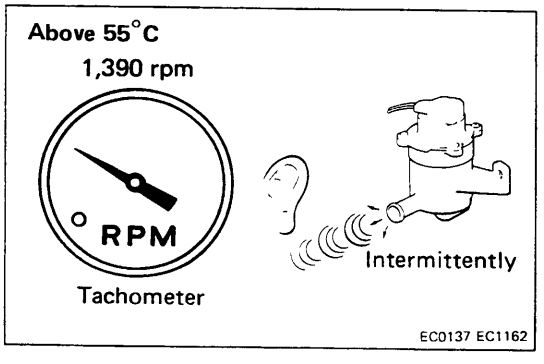

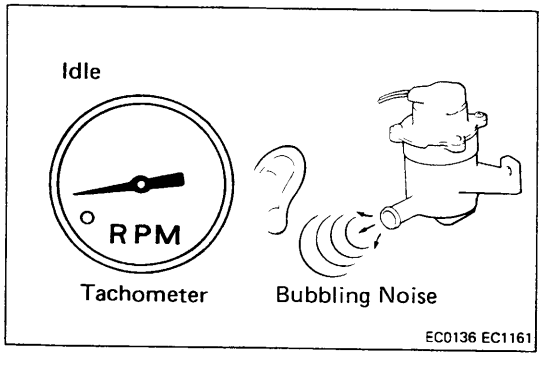

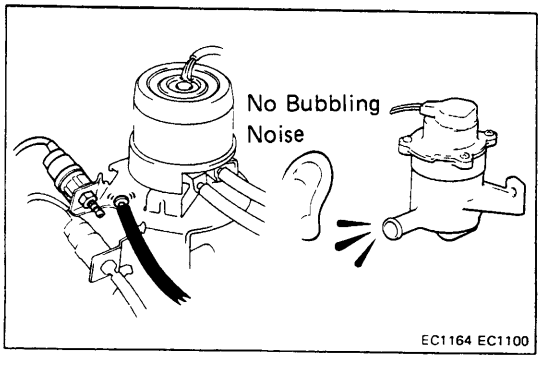

INSPECTION OF AS SYSTEM

1. **VISUALY CHECK HOSES AND TUBES FOR CRACKS, KINKS, DAMAGE OR LOOSE CONNECTIOΝ**

2. **DISCONNECT AS HOSE FROM EACV**

3. **CHECK COLD CONDITION**
   (a) The coolant temperature should be below 6°C (43°F).
   (b) Check that a bubbling noise is not heard from the EACV.
   (c) Warm up the engine to between 18 — 44°C (64 — 111°F).
   (d) Maintain engine speed at above 1,390 rpm.
   (e) Check that a bubbling noise is heard from the EACV.

A03056

4. **CHECK HOT CONDITION**
   (a) Warm up the engine to above 55°C (131°F).
   (b) Maintain engine speed at above 1,390 rpm.
   (c) Check that a bubbling noise is heard intermitten from the EACV.

5. **CHECK IDLE CONDITION**
   With the engine idling (below 1,000 rpm, below 7 mph), check that a bubbling noise is heard from the EACV.

6. **CHECK HEAVY LOAD CONDITION**
   (a) The coolant temperature should be above 18°C (64°F)
   (b) Disconnect the vacuum hose from the vacuum switch and plug the hose end.
   (c) Check that a bubbling noise is not heard from t EACV.

7. **RECONNECT HOSES TO PROPER LOCATION**

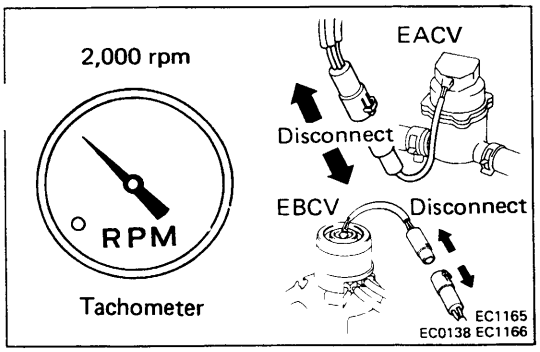

INSPECTION OF FUEL FEEDBACK CONTROL SYSTEM

CHECK FEEDBACK CONDITION

(a) Maintain engine speed at 2,000 rpm.

(b) Disconnect the connectors of EACV and EBCV.

A03057

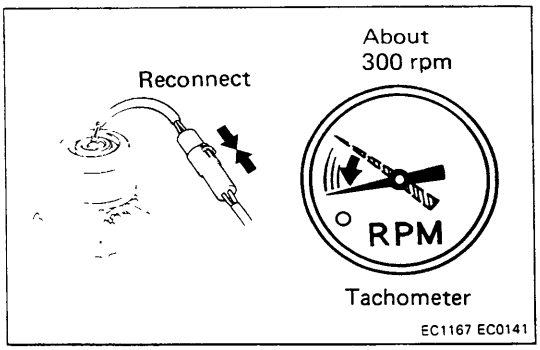

(c) Wait a few seconds.

(d) Reconnect the EBCV connector and check that the engine drops about 300 rpm immediately.

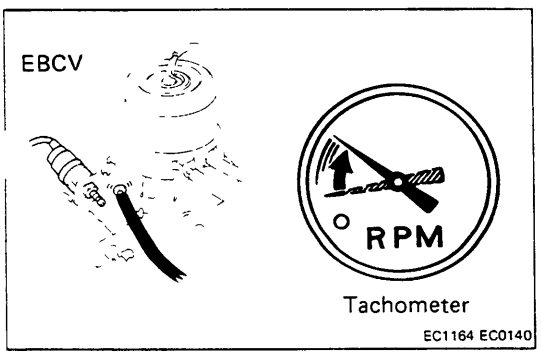

(e) Disconnect the vacuum hose from vacuum switch and plug the hose end.

(f) Check that the engine speed return to 2,000 rpm, after few seconds.

(g) Reconnect the vacuum hose and connector to the proper locations.

IF NO PROBLEM IS FOUND WITH THIS INSPECTION, THE SYSTEM IS OKAY; OTHERWISE INSPECT EACH PART

INSPECTION OF EACV

CHECK EACV

(a) Disconnect the AS hose from the EACV.

(b) Disconnect the connector from the thermo switch (2), and ground it.

(c) Check that a bubbling noise is not heard from the EACV.

(d) Reconnect the connector to thermo switch (2).

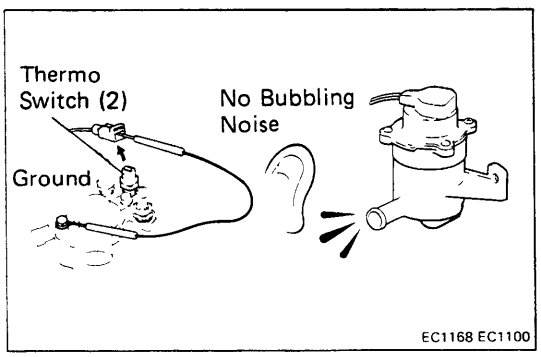

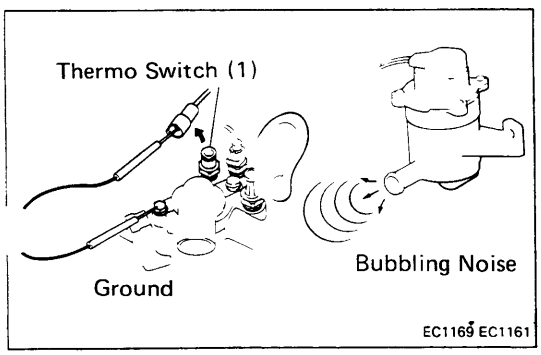

(e) Disconnect the connector from the thermo switch (1), and ground it.

(f) Maintain engine speed at above 1,390 rpm.

(g) Check that a bubbling noise is heard from the EACV.

(h) Reconnect the connector to thermo switch (1).

If a problem is found, replace the EACV.

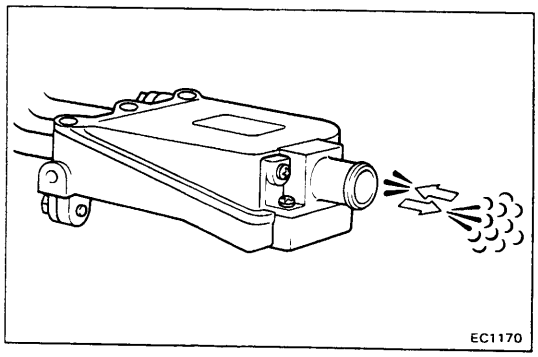

INSPECTION OF REED VALVE

CHECK REED VALVE BY BLOWING AND SUCKING ON PIPE

Check that there is air passage when blown hard, and no air passage when sucked.

A03058

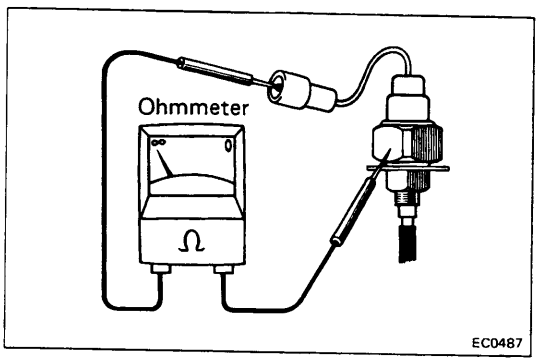

INSPECTION OF VACUUM SWITCH

(a) Using an ohmmeter, check that there is no continuity between the switch terminal and switch body.

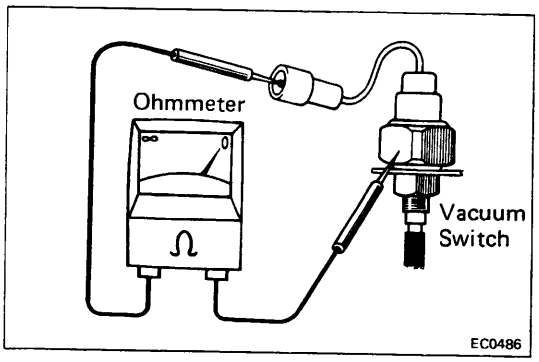

(b) Warm up the engine to normal operating temperature.

(c) Using an ohmmeter, check for continuity between the switch terminal and the body.

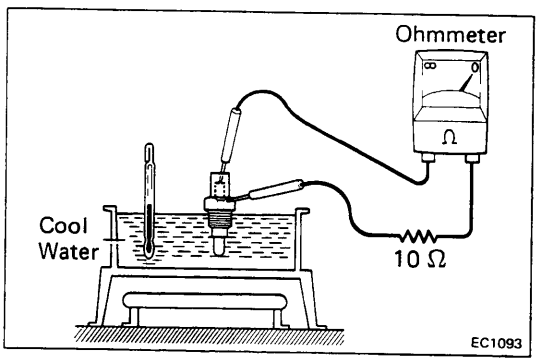

INSPECTION OF THERMO SWITCH (1)

CHECK THERMO SWITCH BY USING OHMMETER

(a) Drain the coolant from the radiator into a suitable container.

(b) Remove the thermo switch.

(c) Cool the thermo switch to below 43°C (109°F).

(d) Using an ohmmeter, check that there is continuity.

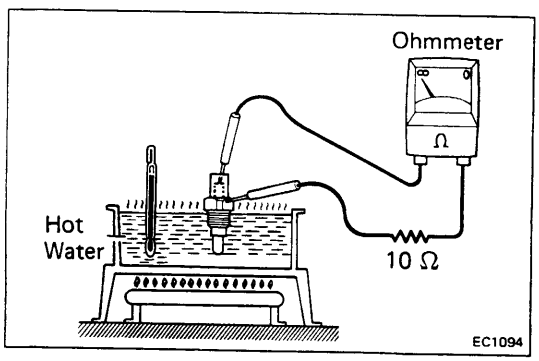

(e) Heat the switch to above 55°C (131°F) with hot water.

(f) Check that there is no continuity.

(g) Apply liquid sealer to the threads of the switch and reinstall.

(h) Fill the radiator with coolant.

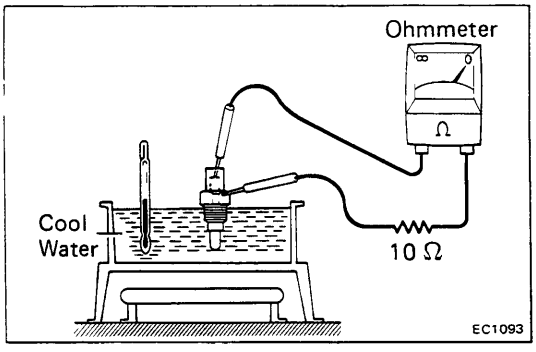

INSPECTION OF THERMO SWITCH (2)

CHECK THERMO SWITCH BY USING OHMMETER

(a) Drain the coolant from the radiator into a suitable container.

(b) Remove the thermo switch from the intake manifold.

(c) Cool the thermo switch to below 6°C (43°F).

(d) Using an ohmmeter, check that there is continuity.

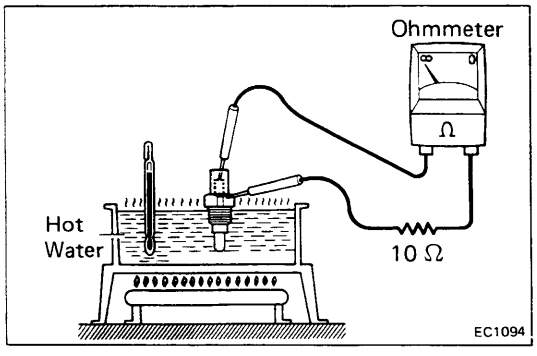

(e) Heat the switch to above 18°C (64°F) with hot water.

(f) Check that there is no continuity.

(g) Apply liquid sealer to the threads of the switch and reinstall.

(h) Fill the radiator with coolant.

A03059

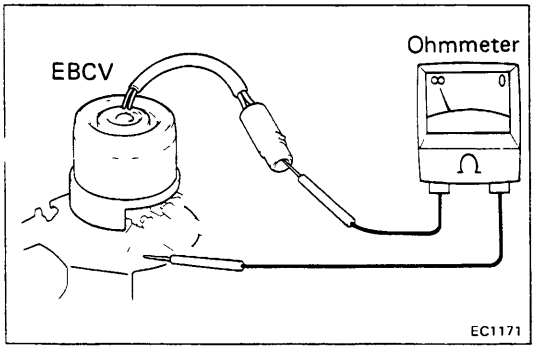

INSPECTION OF EBCV

1. CHECK FOR SHORT CIRCUIT

Using an ohmmeter, check that there is no continuity between the positive (+) terminal and the EBCV body.

If there is continuity, replace the EBCV.

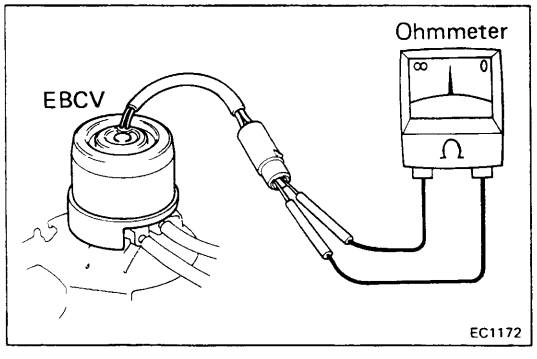

2. CHECK FOR OPEN CIRCUIT

Using an ohmmeter, measure the resistance between the positive (+) terminal and the other terminal as shown.

Specified resistance: 11 — 13 Ω at 20°C (68°F)

If the resistance is not within specification.
Replace the EBCV.

INSPECTION OF SPEED SENSOR

(See Page EC-25)

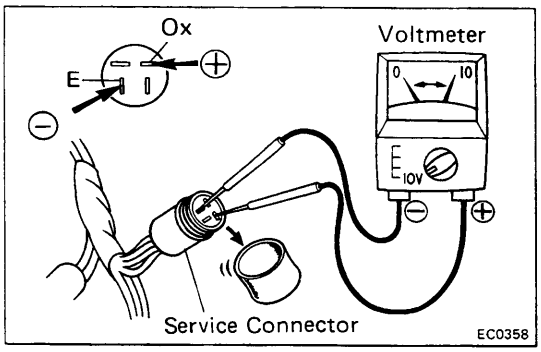

INSPECTION OF Ox SENSOR

CHECK Ox SENSOR WITH VOLTMETER

(a) Warm up the engine to normal operating temperature.

(b) Connect the voltmeter to the service connector.

Service connector location: Left fender apron

Connect the positive (+) testing probe to the Ox terminal and negative (—) testing probe to terminal E.

(c) Race the engine at 2,500 rpm for about 90 seconds.

(d) Maintain engine speed at 2,500 rpm.

(e) Check that the needle of the voltmeter fluctuates 8 times or more in 10 seconds within 0 — 7 volts.

NOTE:

- If this test is positive, the Ox sensor is OK.
- If not, inspect the other parts, hose connections and wiring of air suction and fuel system feedback control system (EC-36).

If no problem is found, replace the Ox sensor.

A03060

AIR SUCTION (AS) SYSTEM (Federal and Canada)

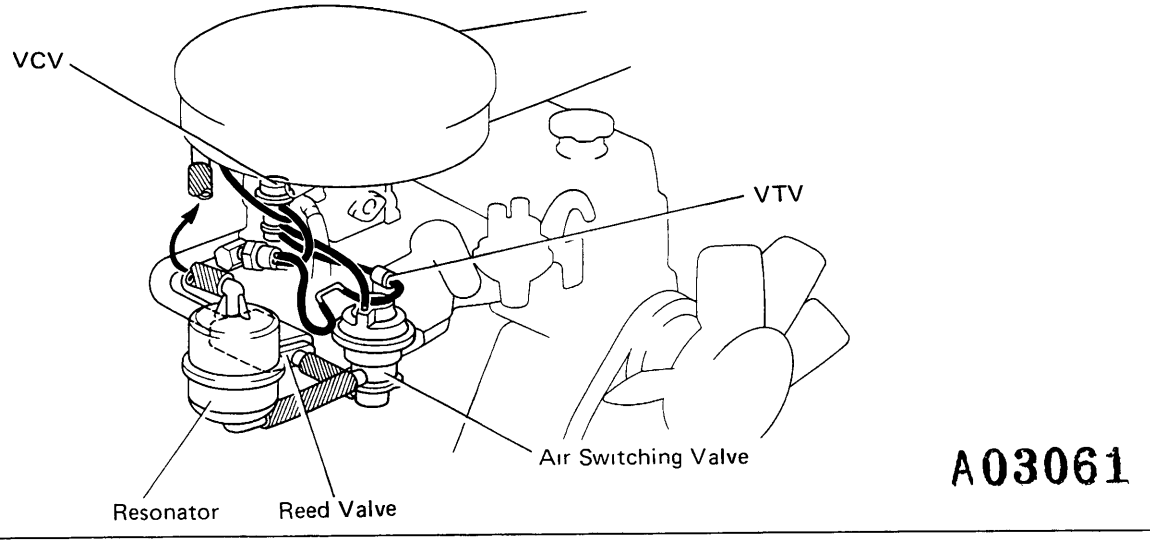

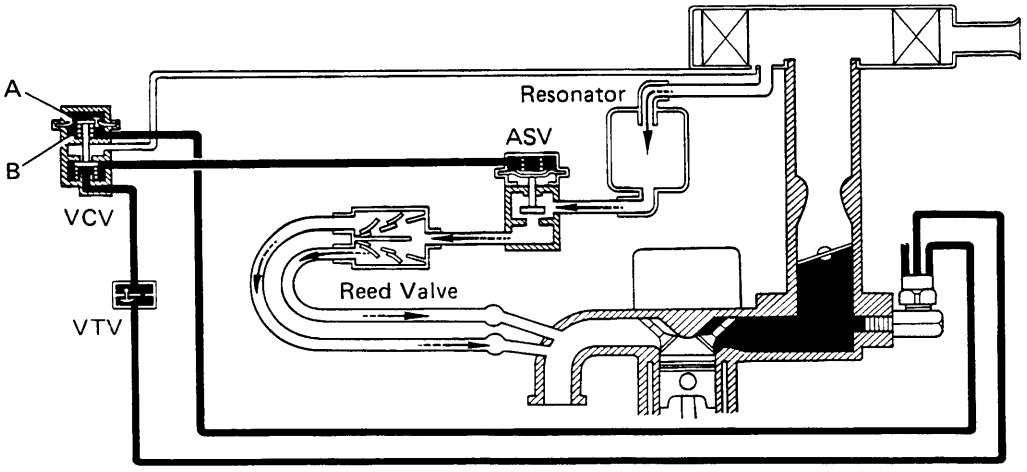

To reduce HC and CO emissions, this system draws in air into exhaust ports to accelerate oxidation, using vacuum generated by the exhaust pulsation in the exhaust manifold.

Condition	Intake Manifold Vacuum	Vacuum in VCV Chamber A and B	Air Switching Valve	AS
Normal driving	—	Same	OPEN	ON
Full load driving	Low vacuum	Same	*1 CLOSED	OFF
Sudden deceleration	High vacuum	*2 High vacuum acts on chamber B	CLOSED	Momentarily OFF

Remarks: *1 The air switching valve shuts off gradually by the VTV.
*2 After a few seconds, vacuum in both chambers of the VCV equalize through the orifice.

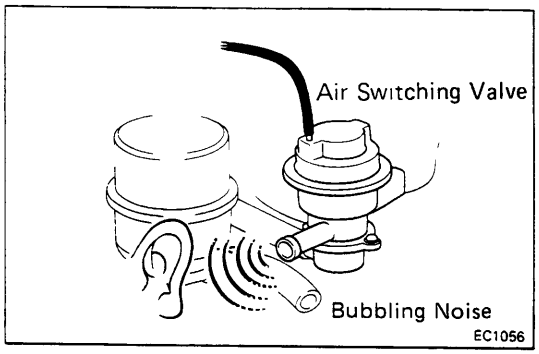

INSPECTION OF AS SYSTEM

1. **VISUALLY CHECK HOSES AND TUBES FOR CRACK KINKS, DAMAGE OR LOOSE CONNECTIONS**

2. **DISCONNECT AIR SUCTION HOSE FROM AIR SWITCHING VALVE**

3. **CHECK AIR SWITCHING VALVE**
   (a) Check that a bubbling noise is heard from the air switching valve at idle.

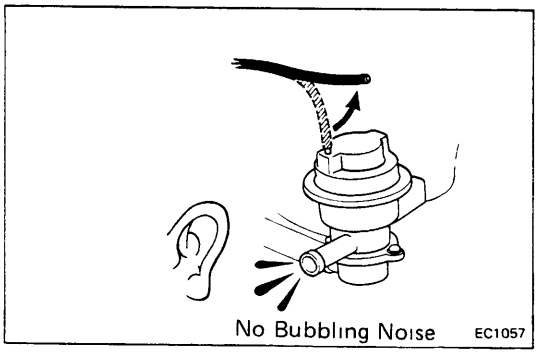

   (b) Disconnect the vacuum hose from the air switching valve.
   (c) Check that a bubbling noise is not heard from the air switching valve at idle.
   (d) Reconnect vacuum hose.

A03062

4. **CHECK VCV**
   Race the engine and quickly close the throttle valve. Check that the bubbling noise stops momentarily.

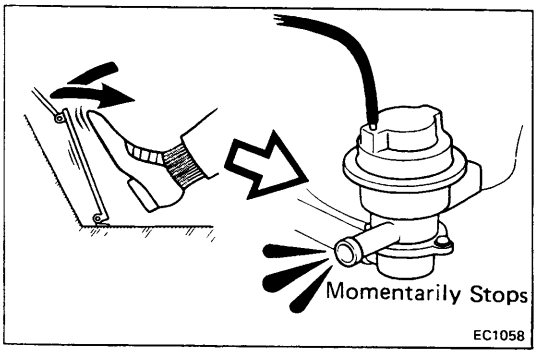

IF NO PROBLEM IS FOUND WITH THIS INSPECTION, THE SYSTEM IS OKAY; OTHERWISE INSPECT EACH PART

INSPECTION OF AIR SWITCHING VALVE

CHECK AIR SWITCHING VALVE BY BLOWING AIR INTO PIPE

(a) Apply vacuum to the air switching valve diaphragm.
(b) Blow air into a pipe and check that the air switching valve is open.
(c) Release the vacuum and check that the air switching valve is closed.

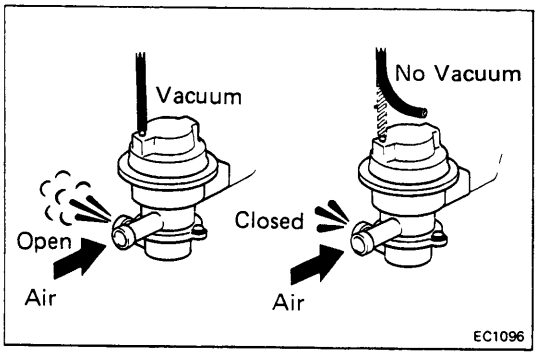

INSPECTION OF VCV

CHECK VCV OPERATION

(a) Disconnect the vacuum hose from port Z of the VCV.
(b) Connect port Z directly to the intake manifold with another hose, and disconnect the vacuum hoses fr ports S and X of the VCV.
(c) With the engine idling, place your finger over port X and check that vacuum is not felt.
(d) Check that vacuum is felt momentarily as the vacuum hose is reconnected to port S.

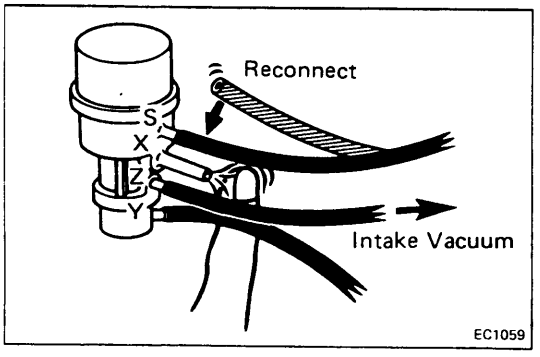

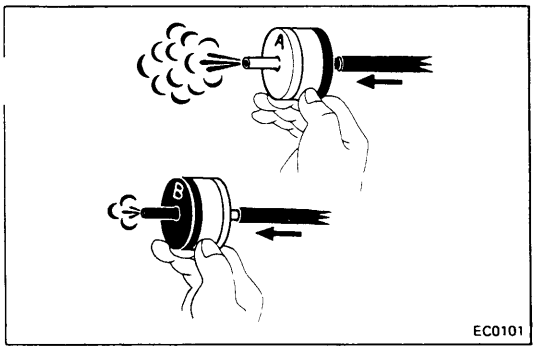

INSPECTION OF VTV

CHECK VTV BY BLOWING AIR INTO EACH SIDE

(a) Check that air flows without resistance from B to A.

(b) Check that air flows with difficulty from A to B.

If a problem is found, replace the VTV.

A03063

THREE-WAY CATALYST (TWC) SYSTEM (Californi`

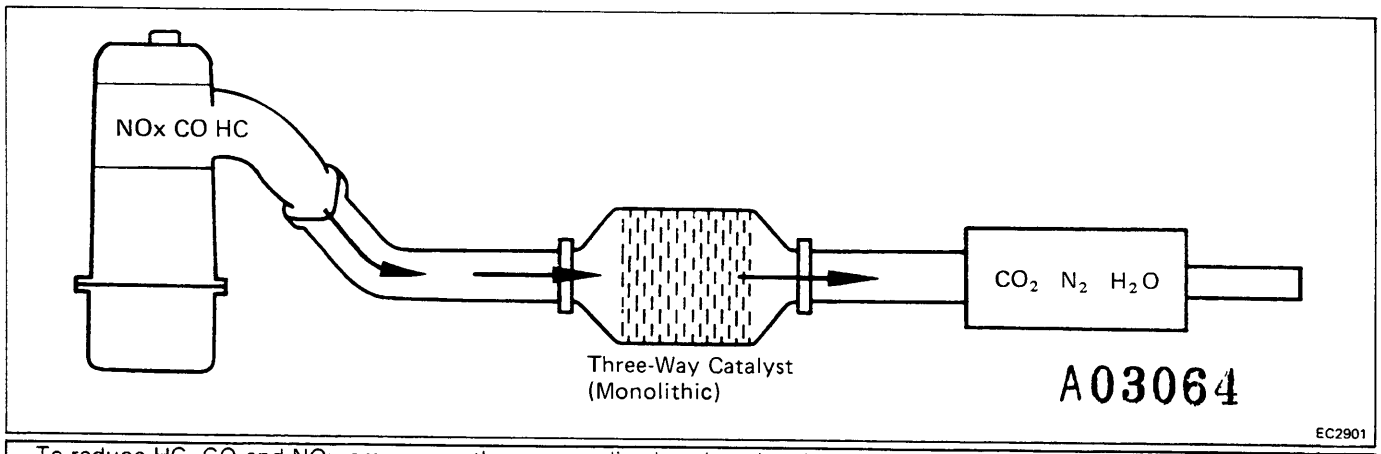

To reduce HC, CO and NOx emissions, they are oxidized, reduced and converted to nitrogen (N_2), carbon dioxide (CO_2) and water (H_2O) by the catalyst.

Exhaust Port		TWC		Exhaust Gas
HC, CO and NO_x	→	Oxidation and reduction	→	CO_2 H_2O N_2

OXIDATION CATALYST (OC) SYSTEM (Federal and Canada)

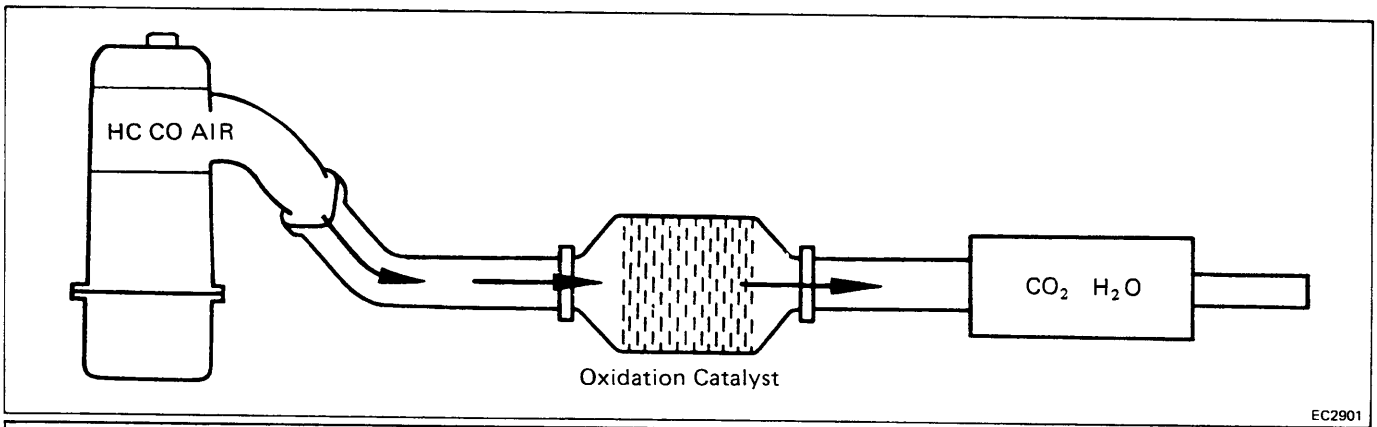

To reduce HC and CO emissions, HC and CO are oxidized and converted to water (H_2O) and carbon dioxide (CO_2) by the catalyst.

Exhaust		Converter		Exhaust Gas
Unburnt HC, CO and AIR	→	Oxidation	→	CO_2 H_2O

INSPECTION OF EXHAUST PIPE ASSEMBLY

1. CHECK CONNECTIONS FOR LOOSENESS OR DAMAGE
2. CHECK CLAMPS FOR WEAKNESS, CRACKS OR DAMAGE

A03065

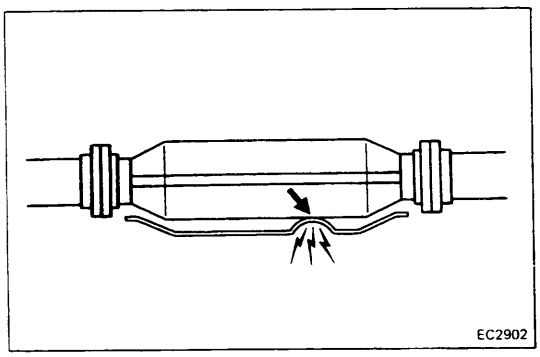

INSPECTION OF CATALYTIC CONVERTER

CHECK FOR DENTS OR DAMAGE

If any part of protector is damaged or dented to the extent that is contacts the catalyst, repair or replace it.

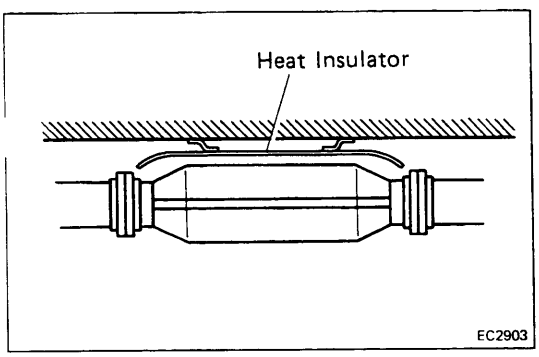

INSPECTION OF HEAT INSULATOR

1. CHECK HEAT INSULATOR FOR DAMAGE
2. CHECK FOR ADEQUATE CLEARANCE BETWEEN CATALYTIC CONVERTER AND HEAT INSULATOR

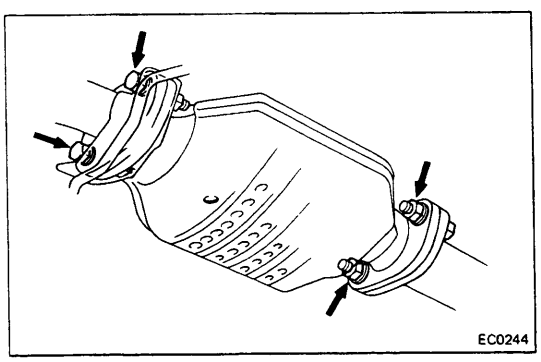

REPLACEMENT OF CATALYTIC CONVERTER

1. REMOVE CATALYTIC CONVERTER
   (a) Jack up the vehicle.
   (b) Check that the converter is cool.
   (c) Remove the bolts at the front and rear of the converter.
   (d) Remove the converter and gaskets.
2. INSTALL CATALYTIC CONVERTER
   (a) Place new gaskets on the converter front and rear pipes, and connect the converter to the exhaust pipes.
   (b) Tighten the bolts.

   Torque: Catalyst — Exhaust pipe
   440 kg-cm (32 ft-lb, 43 N·m)

HIGH ALTITUDE COMPENSATION (HAC) SYSTEM (Federal (Optior``

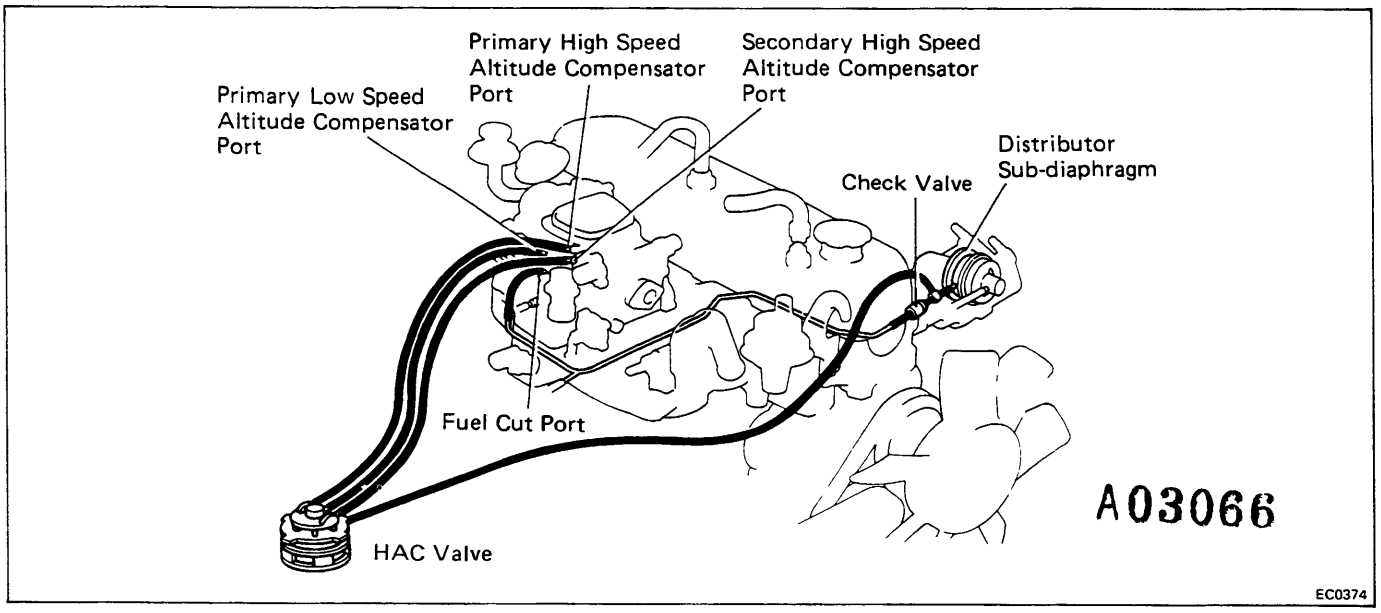

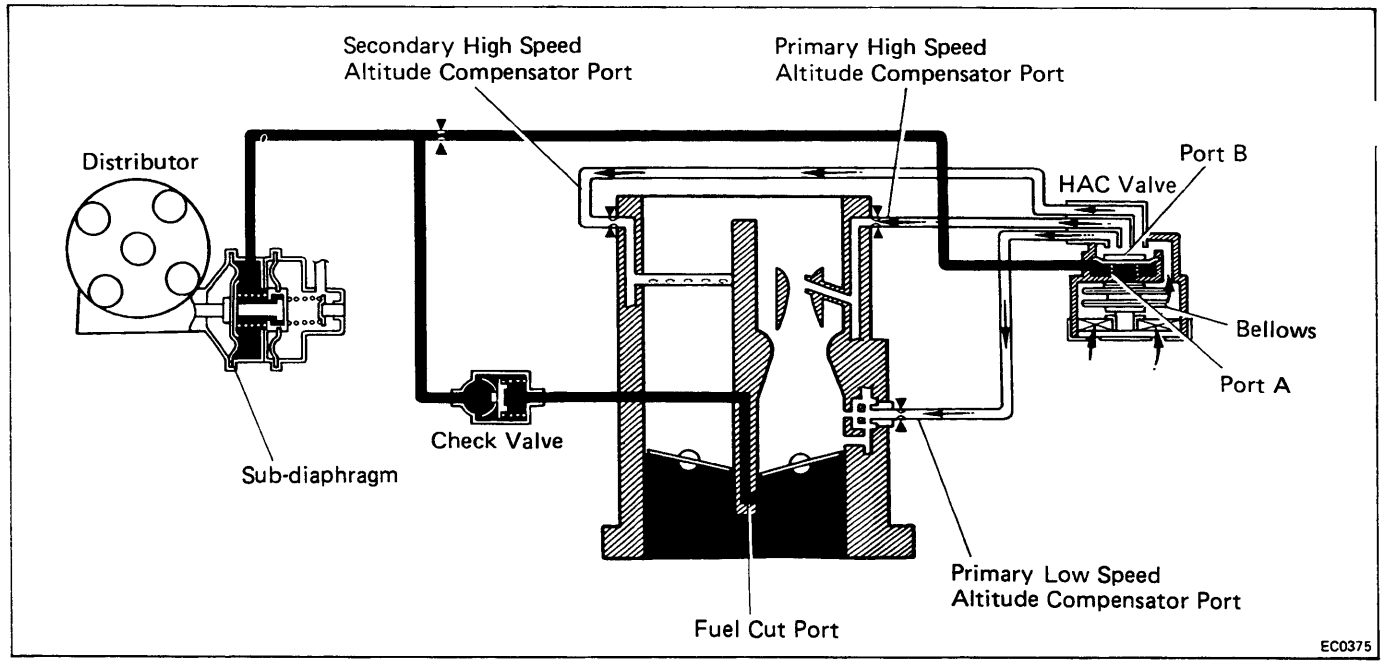

As altitude increases, the air-fuel mixture becomes richer. This system insures proper air-fuel mixture by supplying additional air to the primary low and high speed circuits and secondary high speed circuit of the carburetor, and advances the ignition timing to improve driveability at high altitude (above 1,198 m (3,930 ft)).

Altitude	Bellows in HAC Valve	Port A in HAC Valve	Distributor Sub-diaphragm	Port B in HAC Valve	Air from HAC Valve	Vacuum Ignition Timing
HIGH Above 1,198m (3,930 ft)	EXPANDED	CLOSED	PULLED (Always)	OPEN	Led into primary low and high speed circuits and secondary high speed circuit	ADVANCED (+1: (Always)
LOW Below 783m (2,570 ft)	CONTRACTED	OPEN	NOT PULLED (PULLED only during idling)	CLOSED	STOPPED	INITIAL TIMING (ADVANCED (+12°) only during idling)

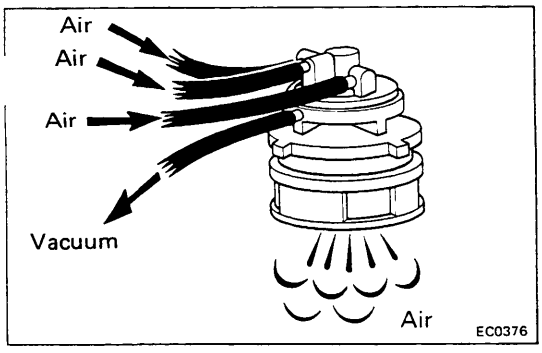

INSPECTION OF HAC SYSTEM

PRECHECK:
Before checking the HAC system, determine the position of the HAC valve. This can be done by blowing into any one of the three ports on top of the HAC valve with the engine idling. If the passage is open, the valve is in the HIGH ALTITUDE position.

A03067

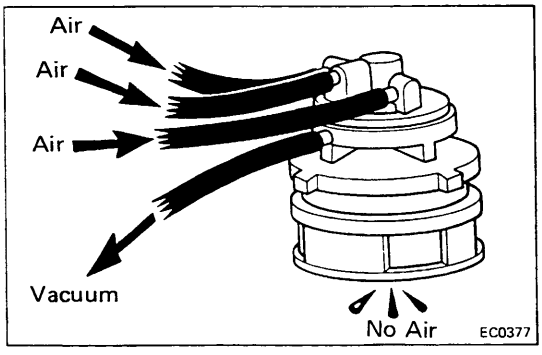

If it is closed, the valve is in the LOW ALTITUDE position.

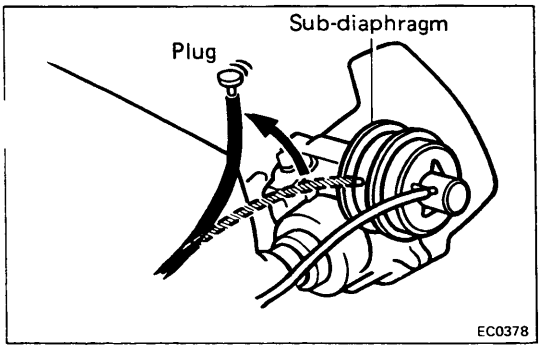

A. AT HIGH ALTITUDE

1. CHECK IGNITION TIMING AT IDLE

(a) Warm up the engine.

(b) Disconnect the hose from the distributor subdiaphragm, and plug the hose end.

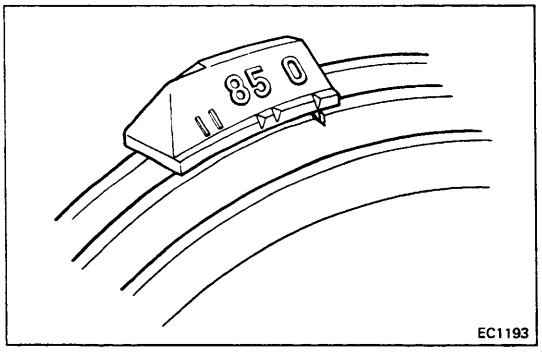

(c) Check the ignition timing.

Ignition timing: 0° BTDC @ Max. 950 rpm

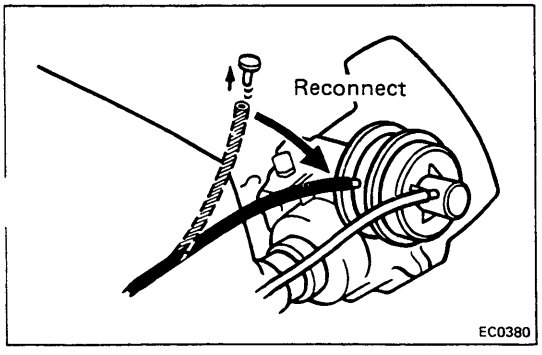

(d) Reconnect the hose to the sub-diaphragm.

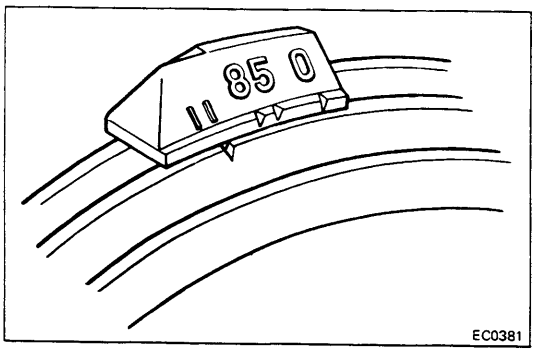

(e) Check that the ignition timing advances.

Ignition timing: About 12° BTDC @ Max. 950 rpm

A03068

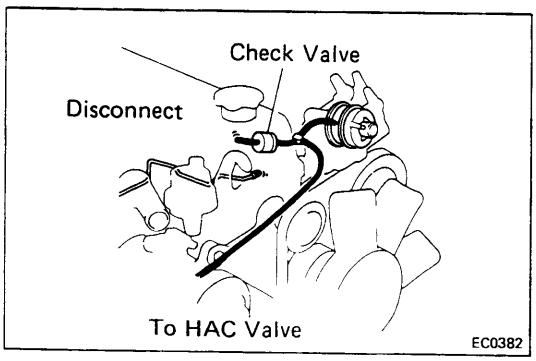

2. CHECK THE CHECK VALVE

(a) Disconnect the vacuum hose between the check valve and vacuum pipe at the vacuum pipe side, and plug the pipe end.

(b) Check that the ignition timing remains stationary for more than one minute.

(c) Stop the engine and reconnect the hose to the vacuum pipe.

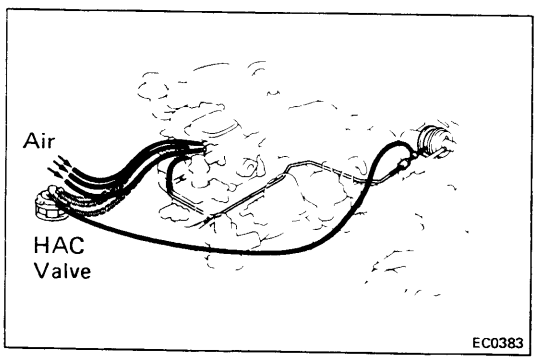

3. CHECK CARBURETOR

(a) Disconnect three hoses from the pipes on top of the HAC valve.

(b) Blow air into each hose and check that air flows in the carburetor.

(c) Reconnect the hoses to the proper locations.

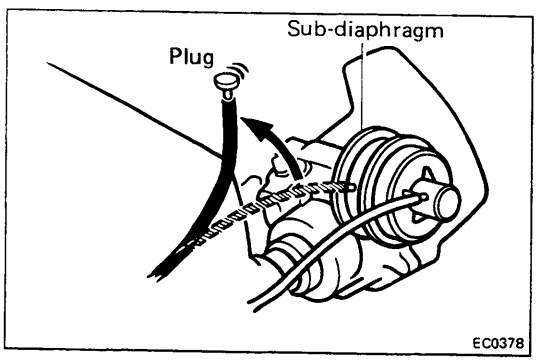

B. AT LOW ALTITUDE

1. CHECK IGNITION TIMING AT IDLE

(a) Warm up the engine.

(b) Disconnect the hose from the distributor subdiaphragm, and plug the hose end.

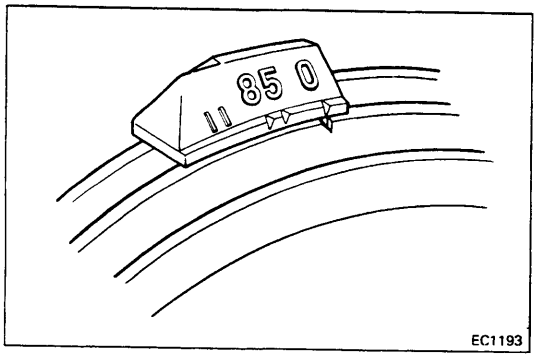

(c) Check the ignition timing.

Ignition timing: 0° BTDC @ Max. 950 rpm

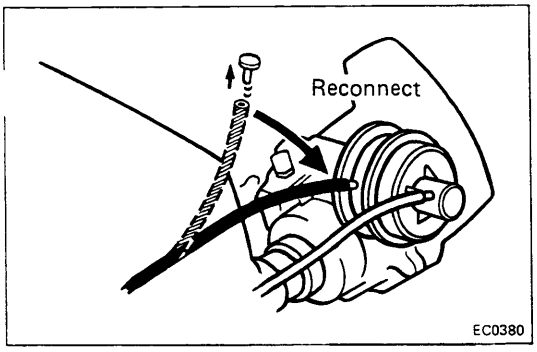

(d) Reconnect the hose to the sub-diaphragm.

A03069

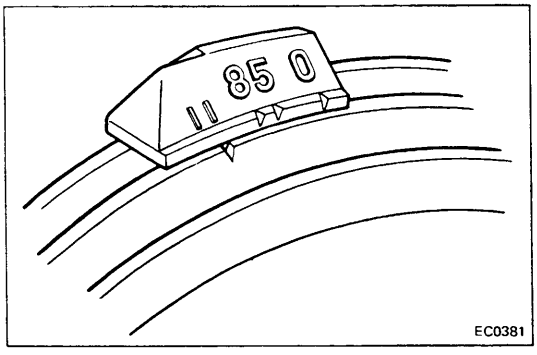

(e) Check that the ignition timing advances.

Ignition timing: About 12° BTDC @ Max. 950 rpm

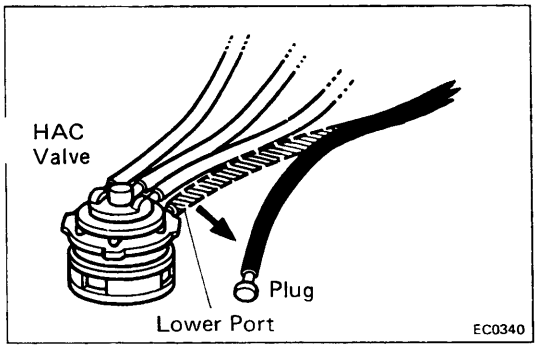

2. CHECK THE CHECK VALVE

(a) Disconnect the vacuum hose from lowest port of the HAC valve, and plug the hose end.

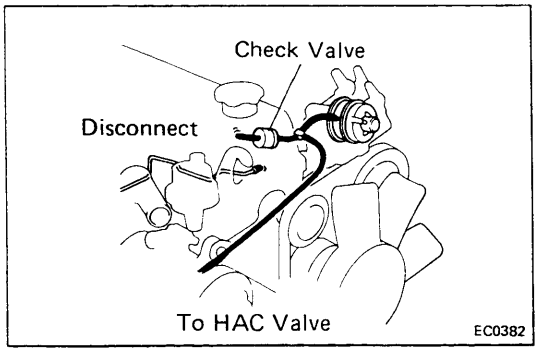

(b) Disconnect the vacuum hose between the check valve and vacuum pipe at the pipe side, and plug the pipe end.

(c) Check that the ignition timing remains stationary for more than one minute.

(d) Stop the engine and reconnect the hoses to the vacuum pipe and HAC valve.

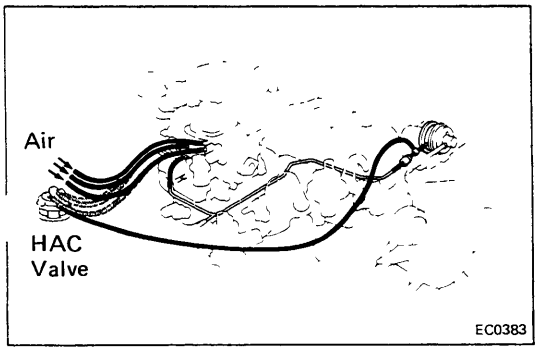

3. CHECK CARBURETOR

(a) Disconnect three hoses from the pipes on top of the HAC valve.

(b) Blow air into each hose and check that air flows into the carburetor.

(c) Reconnect the hoses to the proper locations.

IF NO PROBLEM IS FOUND WITH THIS INSPECTION, THE SYSTEM IS OKAY; OTHERWISE INSPECT EACH PART

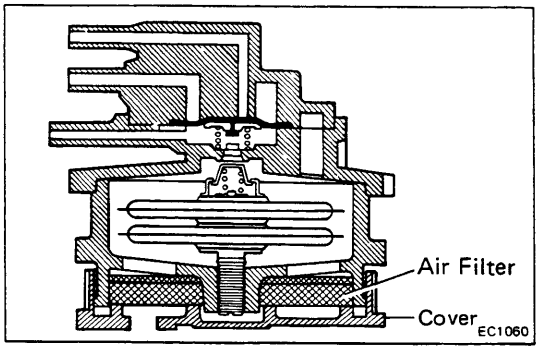

INSPECTION OF HAC VALVE

VISUALLY CHECK AND CLEAN AIR FILTER IN HAC VALVF

A03070

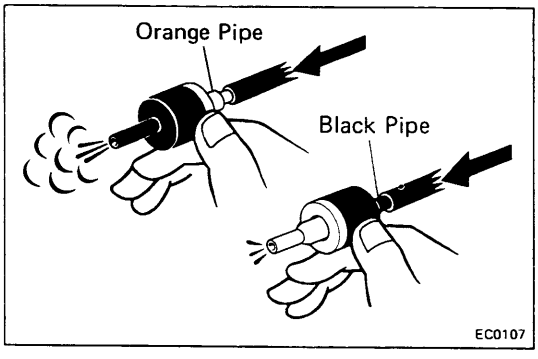

INSPECTION OF CHECK VALVE

CHECK VALVE BY BLOWING AIR INTO EACH PIPE

(a) Check that air flows from the orange pipe to the black pipe.

(b) Check that air does not flow from the black pipe to the orange pipe.

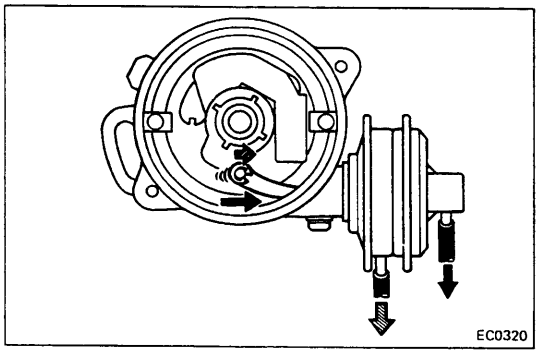

INSPECTION OF DISTRIBUTOR VACUUM ADVANCER

CHECK OPERATION OF VACUUM ADVANCER

(a) Remove the distributor cap and rotor.

(b) Apply vacuum to the diaphragm, and check that the vacuum advancer moves in accordance with the vacuum.

(c) Reinstall the rotor and distributor cap.

AUXILIARY SYSTEMS
1. Automatic Hot Air Intake (HAI) System

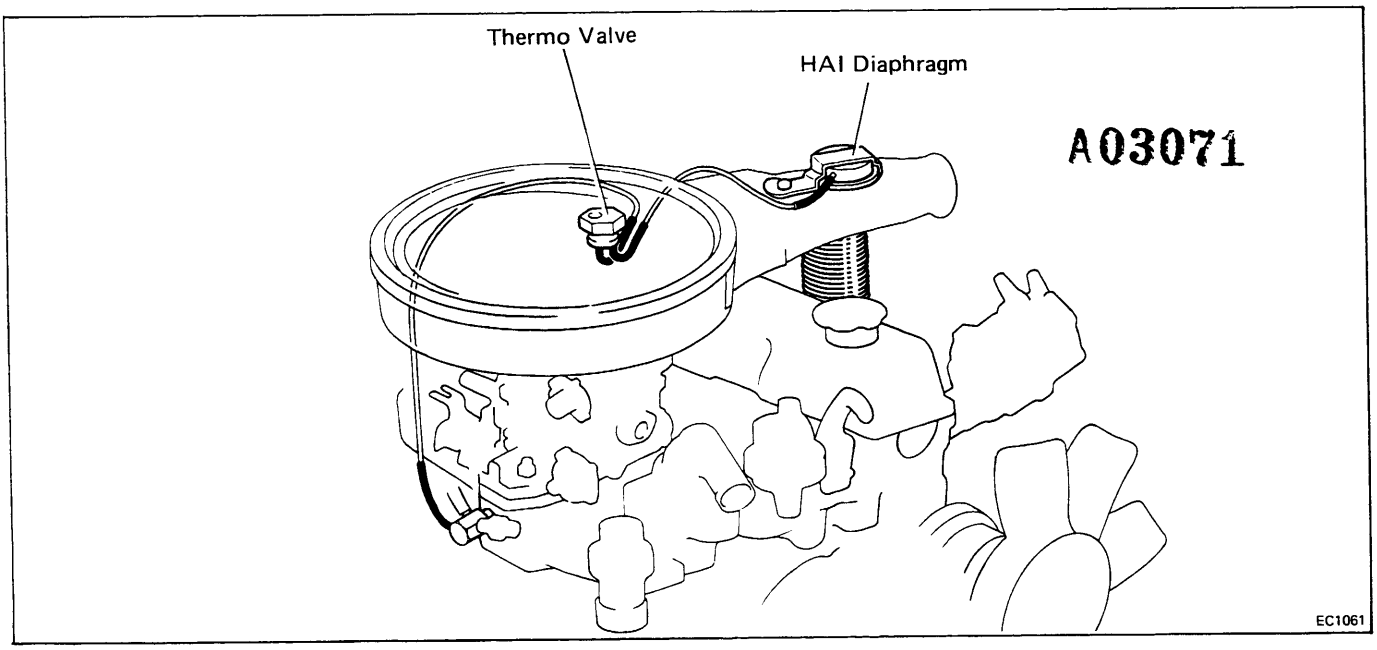

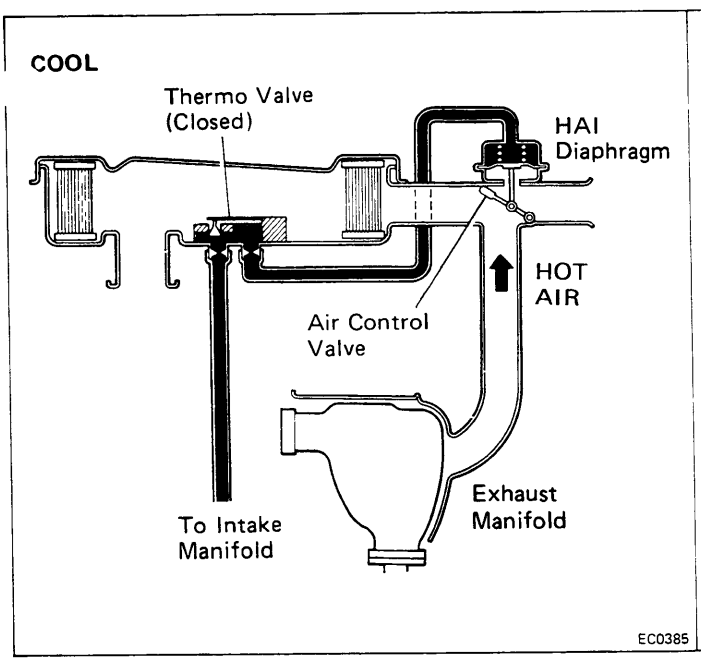

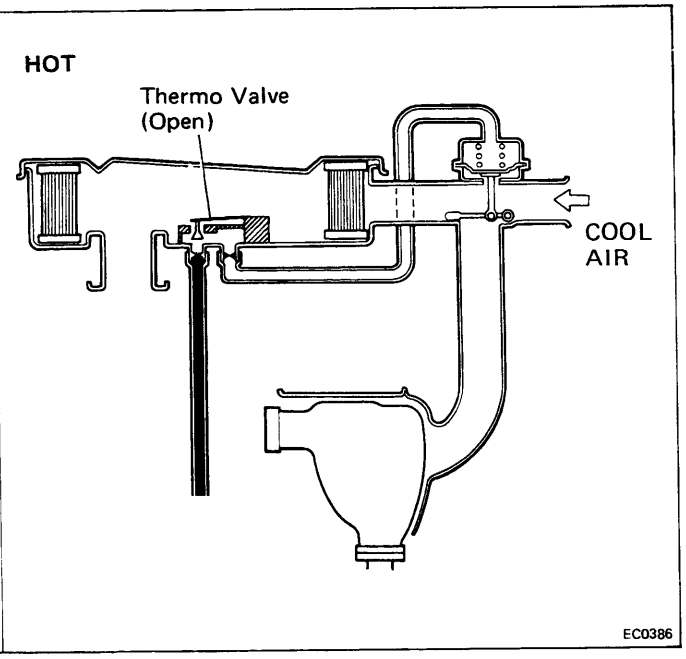

This system leads a hot air supply to the carburetor in cold weather to improve driveability and to prevent the carburetor from icing in extremely cold weather.

Temperature in Air Cleaner	Thermo Valve	Air Control Valve	Intake Air
Cool Below 30°C (86°F)	CLOSED	Hot air passage OPEN	HOT
Hot Above 45°C (113°F)	OPEN	Cool air passage OPEN	COOL

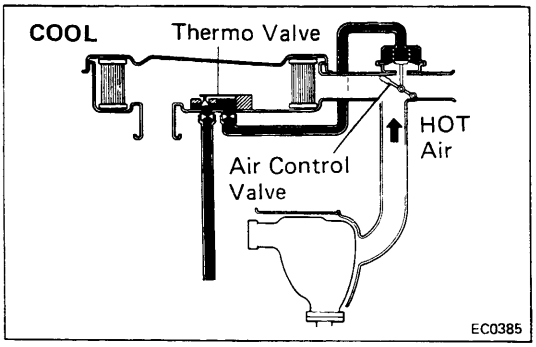

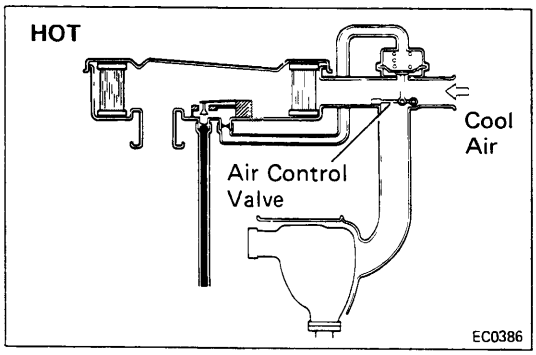

INSPECTION OF HAI SYSTEM

1. CHECK AIR CONTROL VALVE OPERATION

(a) Remove the air cleaner cover.

(b) Cool the thermo valve by blowing compressed air on it.

(c) Check that the air control valve closes the cool air passage at idle.

A03072

(d) Reinstall the air cleaner cover and warm up the engine.

(e) Check that the air control valve opens the cool air passage at idle.

2. CHECK HOSES AND CONNECTIONS

Visually check the hoses and connections for cracks, leaks or damage.

2. Automatic Choke System

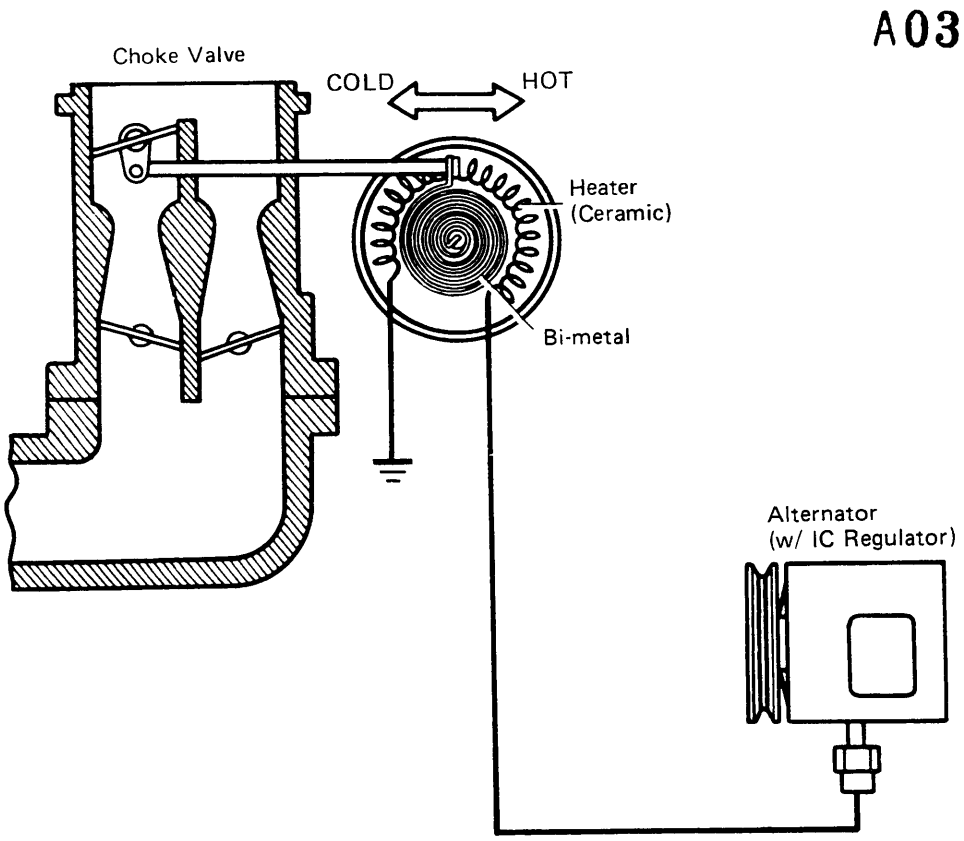

This system temporarily supplies a rich mixture to the engine by closing the choke valve when the engine is cold.

IG S/W	Engine	Current from Terminal L to Heater	Bi-metal	Choke Valve
OFF	Not running	Not flowing	Expanded	CLOSED
ON	Not running	*Not flowing	Expanded	CLOSED
	Running	Flowing	Heated up and contracted	OPEN

Remarks: *On alternators with an IC regulator, slight voltage will occur when the ignition switch is turned ON, but not sufficient current to warm up the heater.

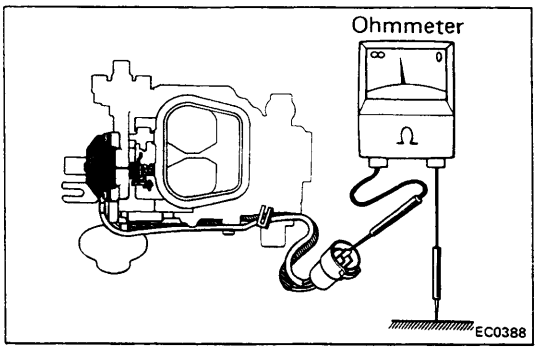

INSPECTION OF HEATER (Ceramic)

1. UNPLUG WIRING CONNECTOR
2. MEASURE RESISTANCE WITH OHMMETER
   Resistance: 19 — 23 Ω at 20°C (68°F)

A03074

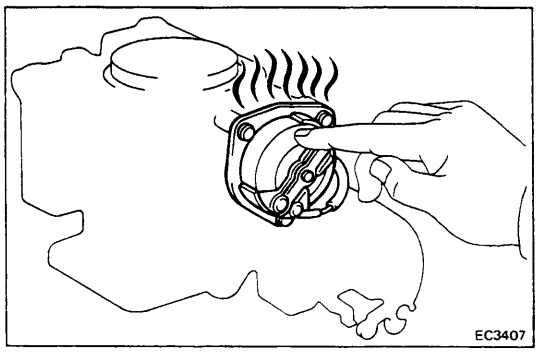

INSPECTION OF AUTOMATIC CHOKE SYSTEM

1. START ENGINE
2. SHORTLY AFTER, CHECK THAT CHOKE VALVE BEGINS TO OPEN AND CHOKE HOUSING IS HEATED

3. Choke Breaker (CB) System

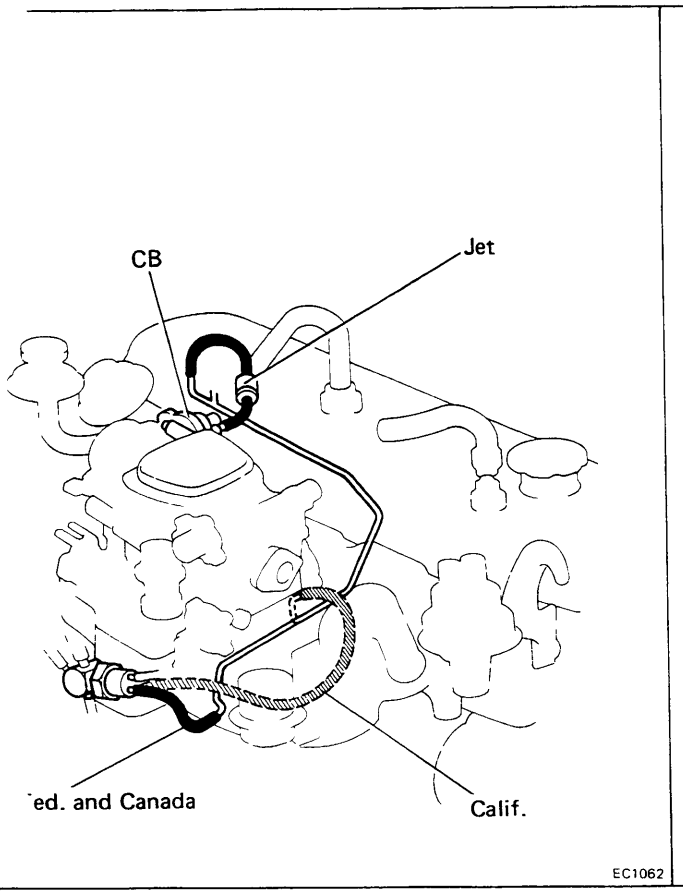

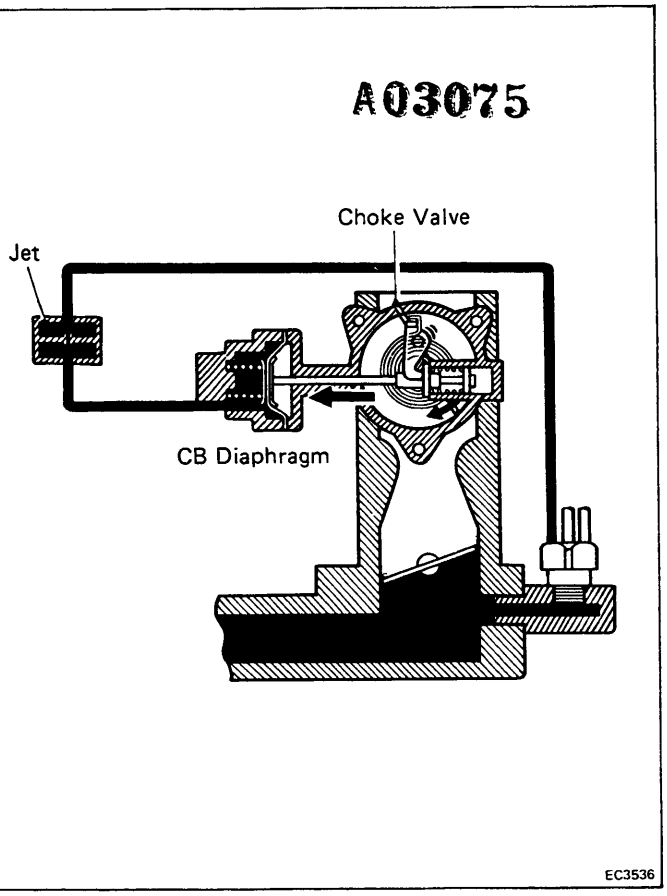

This system slightly opens the choke valve to prevent a too rich mixture after firing when the choke is closed.

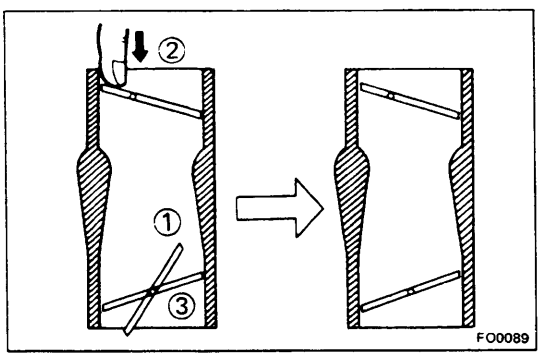

INSPECTION OF CB SYSTEM

CHECK CHOKE LINKAGE AND DIAPHRAGM WITH COLD ENGINE

(a) While holding the throttle valve slightly open, push the choke valve closed, and hold it closed as you release the throttle valve.

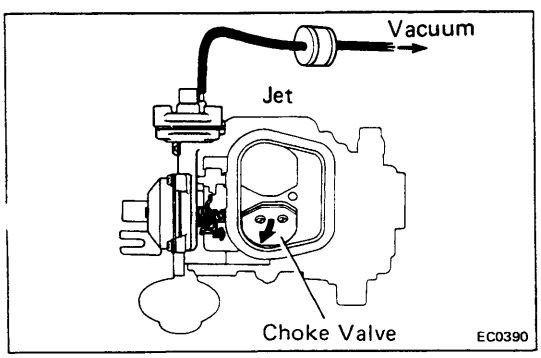

(b) Disconnect the vacuum hose between the jet and vacuum pipe.

(c) Apply vacuum to the jet and check that the choke valve slightly opens.

4. Choke Opener System

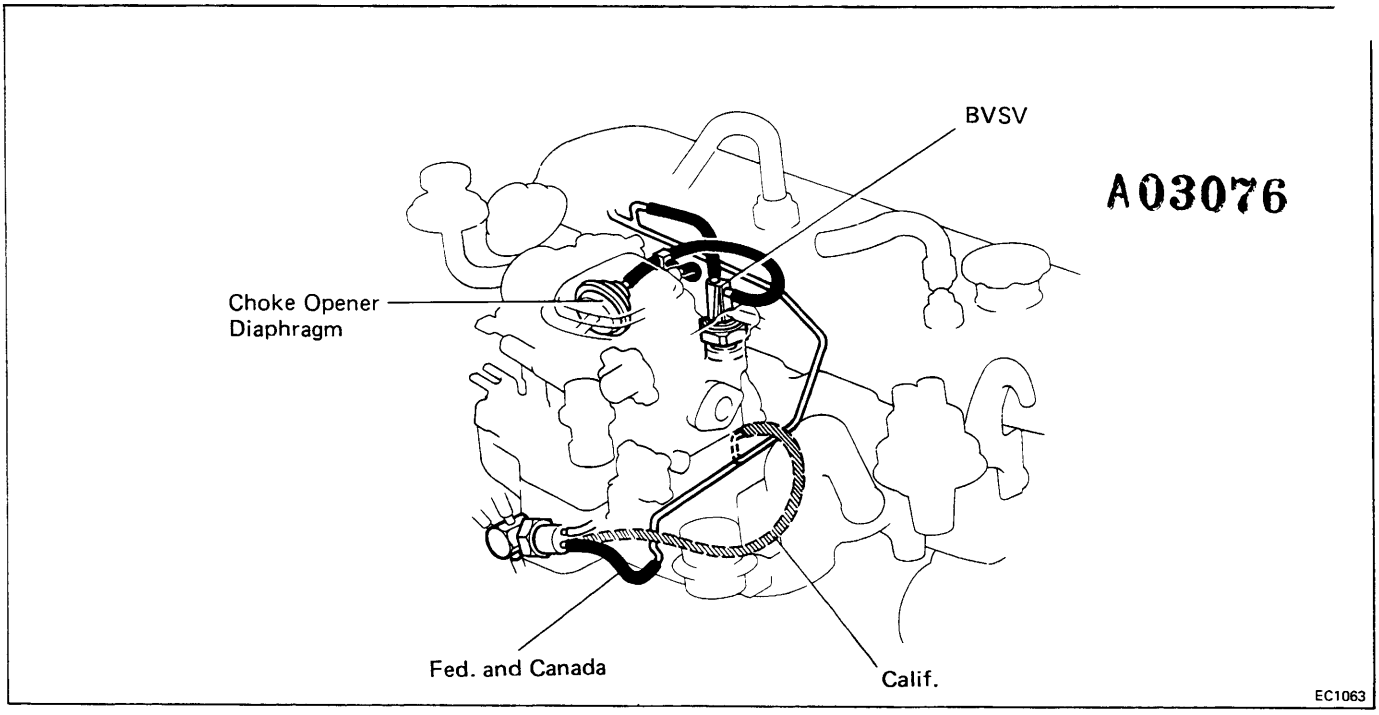

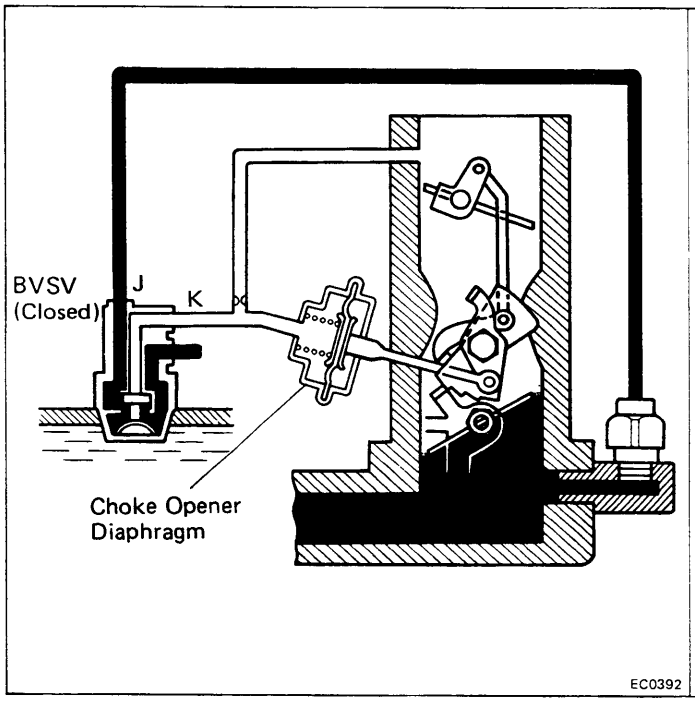

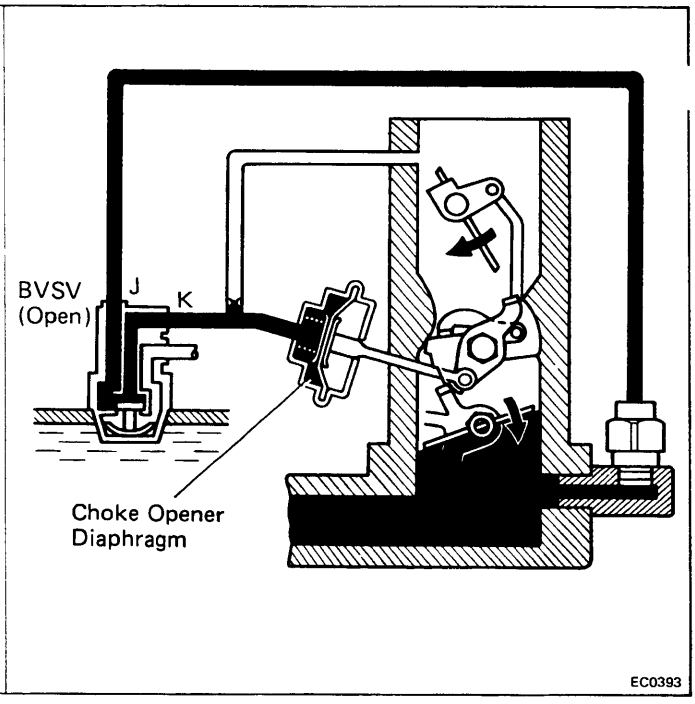

After warm-up, this system forcibly holds the choke valve open to prevent an over-rich mixture and release the fast idle cam to the 4th step to lower the engine rpm.

Coolant Temp.	BVSV	Diaphragm	Choke Valve	Fast Idle Cam	Engine RPM
Below 55°C (131°F)	CLOSED (J-K)	Released by spring tension	Closed by automatic choke	Set at 1st or 2nd step	HIGH
Above 74°C (165°F)	OPEN (J-K)	Pulled by manifold vacuum	OPEN	Released to 4th step	LOW

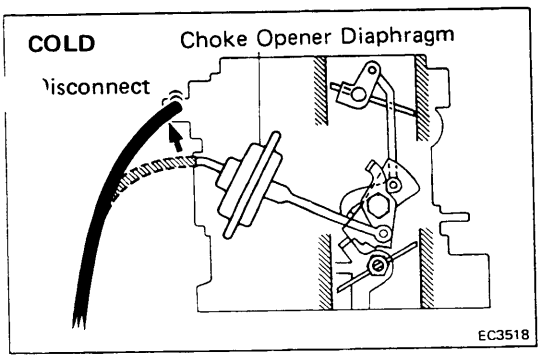

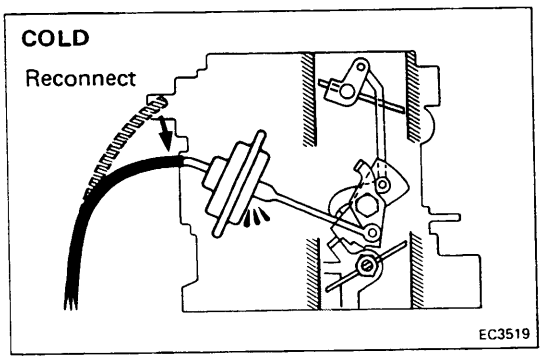

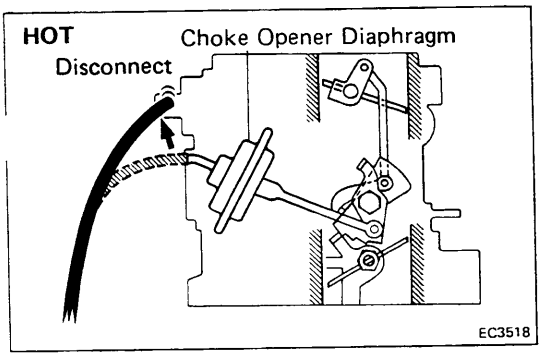

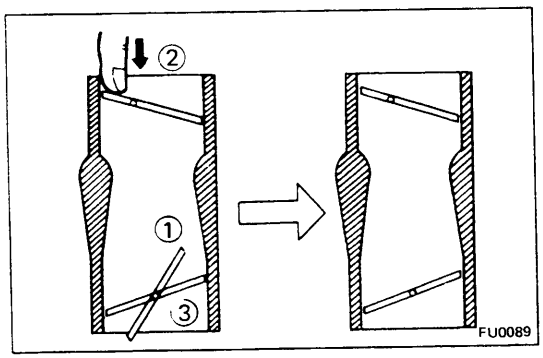

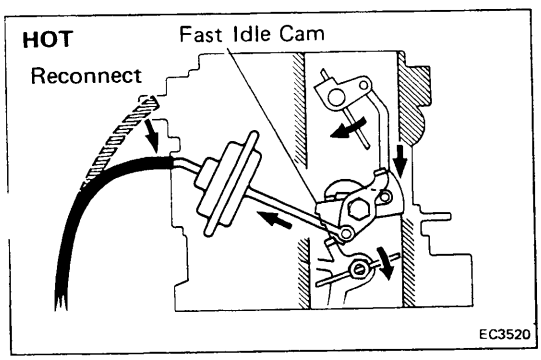

INSPECTION OF CHOKE OPENER SYSTEM

1. CHECK BVSV WITH COLD ENGINE

(a) The coolant temperature should be below 55°C (131°F).

(b) Disconnect the vacuum hose from the choke opener diaphragm.

(c) Step down on the accelerator pedal and release it. Then start the engine.

(d) Reconnect the vacuum hose and check that the choke linkage does not move.

A03077

2. CHECK BVSV, DIAPHRAGM AND LINKAGE WITH WARM ENGINE

(a) Warm up the engine to normal operating temperature.

(b) Disconnect the vacuum hose from the choke opener diaphragm.

(c) Set the fast idle cam.
While holding the throttle slightly open, push the choke valve closed, and hold it closed as you release the throttle valve.

(d) Start the engine, but do not touch the accelerator pedal.

(e) Reconnect the vacuum hose, and check that the choke linkage moves, and that the fast idle cam is released to the 4th step.

IF NO PROBLEM IS FOUND WITH THIS INSPECTION, THE SYSTEM IS OKAY; OTHERWISE INSPECT EACH PART

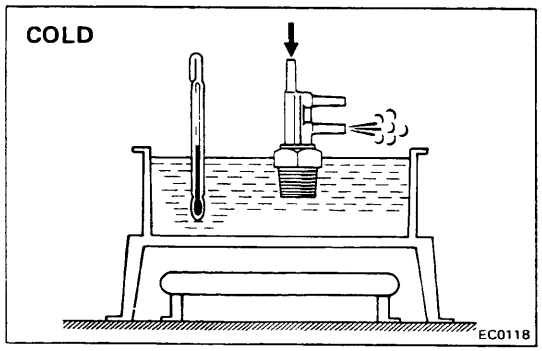

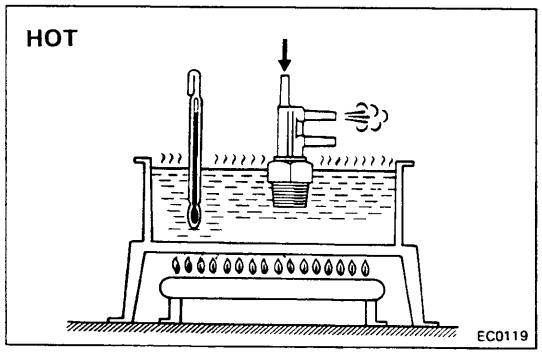

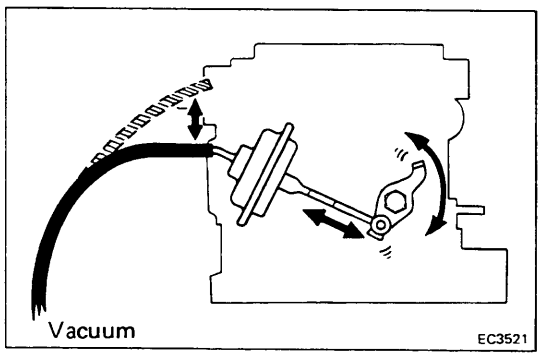

INSPECTION OF BVSV

CHECK BVSV BY BLOWING AIR INTO PIPE

(a) Drain the coolant from the radiator into a suitable container.

(b) Remove the BVSV from the intake manifold.

(c) Cool the BVSV to below 55°C (131°F).

(d) Check that air flows from pipe J to pipe L.

(e) Heat the BVSV to above 74°C (165°F).

(f) Check that air flows from pipe J to pipe K.

If a problem is found replace the BVSV.

(g) Apply liquid sealer to the threads of the BVSV and reinstall.

(h) Fill the radiator with coolant.

A03078

INSPECTION OF DIAPHRAGM

CHECK THAT CHOKE LINKAGE MOVES IN ACCORDANCE WITH APPLIED VACUUM

If a problem is found, replace the diaphragm.

5. Auxiliary Acceleration Pump (AAP) System

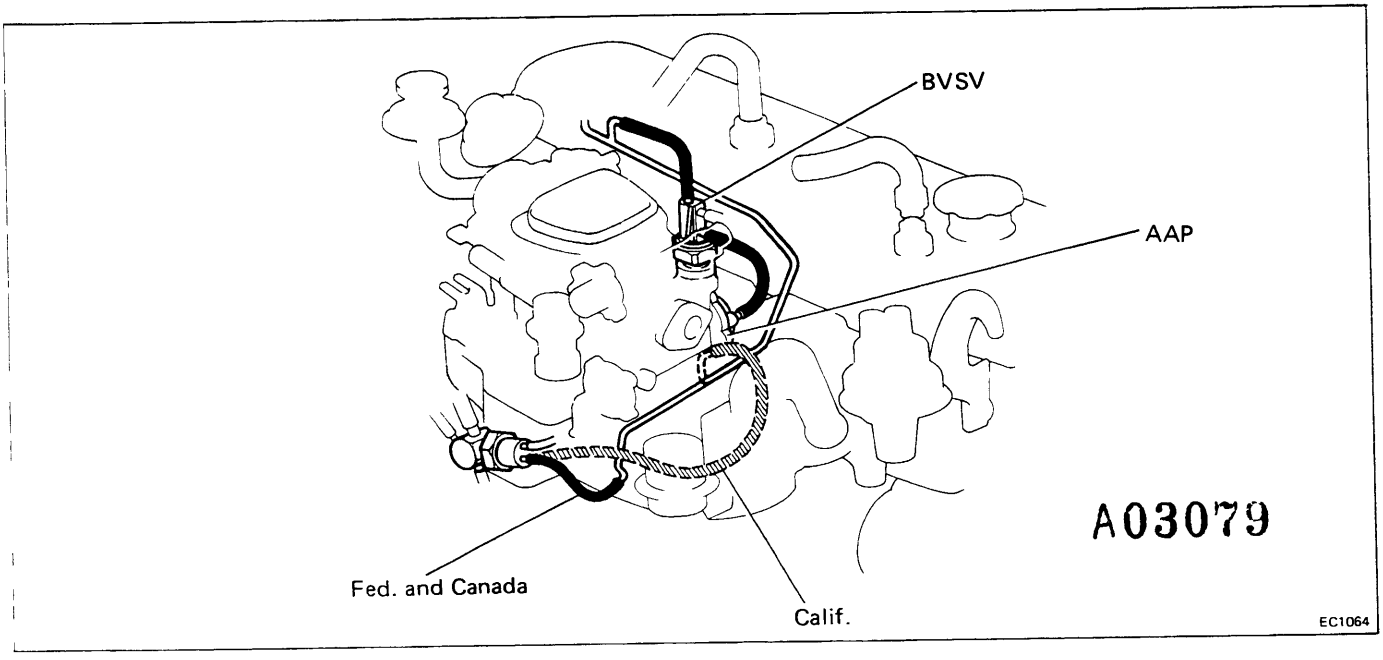

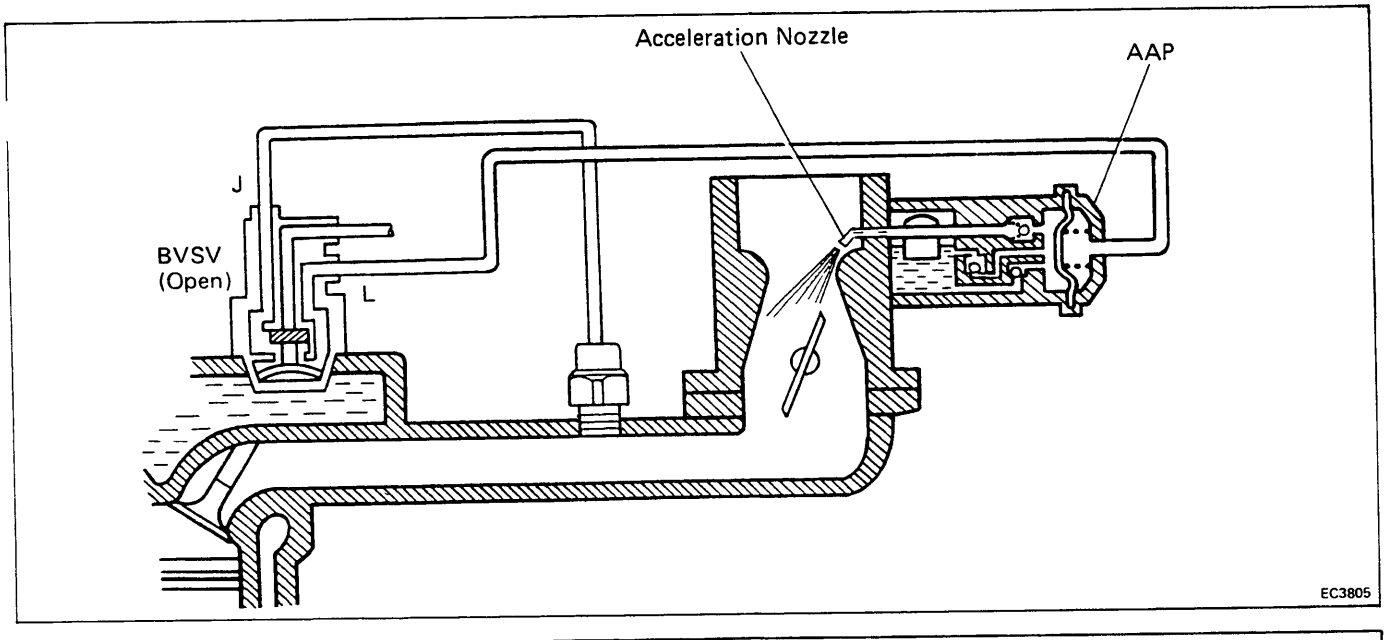

The carburetor air-fuel mixture is very lean. When accelerating with a cold engine, the main acceleration pump capacity is insufficient to provide good acceleration. The AAP system compensates for this by forcing more fuel into the acceleration nozzle to obtain better cold engine performance.

Coolant Temp.	BVSV	Engine	Intake Vacuum	Diaphragm in AAP	Fuel
Below 55°C (131°F)	OPEN (J-L)	Constant RPM	HIGH	Pulled by vacuum	Drawn into AAP Chamber
		Acceleratаion	LOW	Returned by spring tension	Forced into acceleration Nozzle
Above 74°C (165°F)	CLOSED (J-L)	—	—	No operation	—

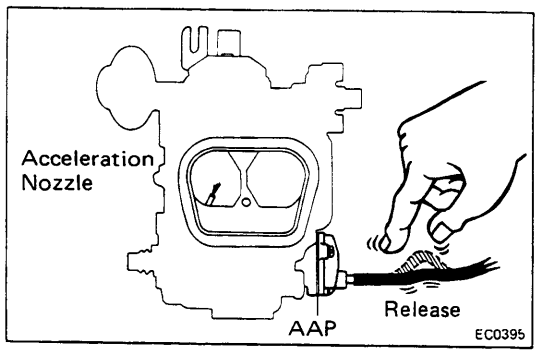

INSPECTION OF AAP SYSTEM

1. CHECK SYSTEM WITH COLD ENGINE

(a) Check that the coolant temperature is below 55°C (131°F).

(b) Remove the air cleaner.

A03080

(c) Start the engine.

(d) Pinch the AAP hose, and stop the engine.

(e) Release the hose.

(f) Check that gasoline spurts out from the acceleration nozzle.

2. REPEAT (c), (d) AND (e) ABOVE AFTER WARM-UP

(a) Check that gasoline does not spurt out from the acceleration nozzle.

(b) Reinstall the air cleaner.

IF NO PROBLEM IS FOUND WITH THIS INSPECTION, THE SYSTEM IS OKAY, OTHERWISE INSPECT EACH PART

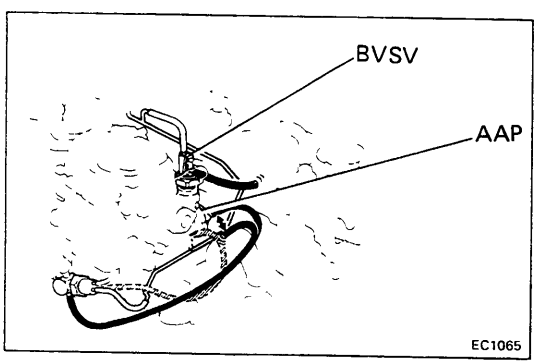

INSPECTION OF AAP DIAPHRAGM

CHECK DIAPHRAGM OPERATION AT IDLE

(a) Start the engine.

(b) Disconnect the vacuum hose from the AAP.

(c) Apply and release vacuum to the diaphragm at idle.

(d) Check that the engine rpm changes by releasing vacuum.

(e) Reconnect the AAP hose.

If a problem is found, replace the diaphragm.

INSPECTION OF BVSV

(See page EC-60)

6. Deceleration Fuel Cut System

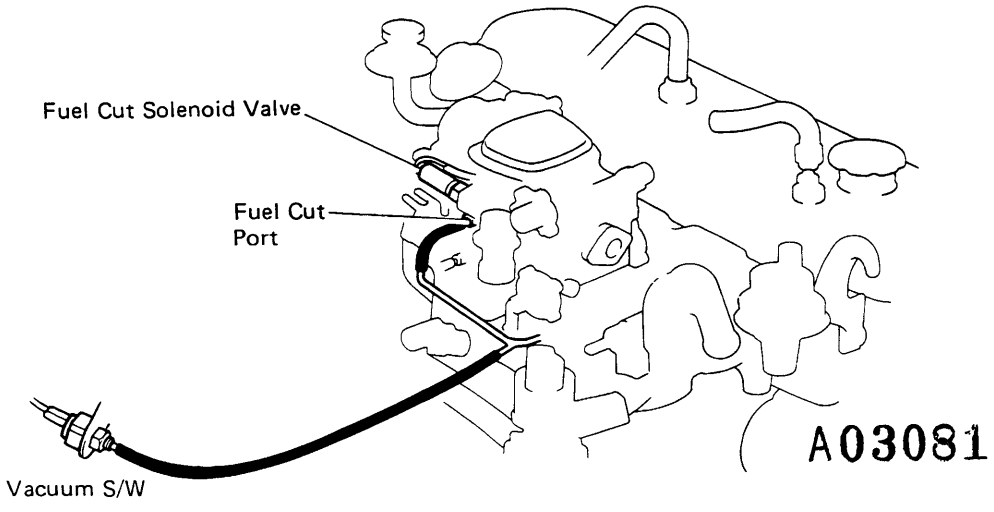

EC0397

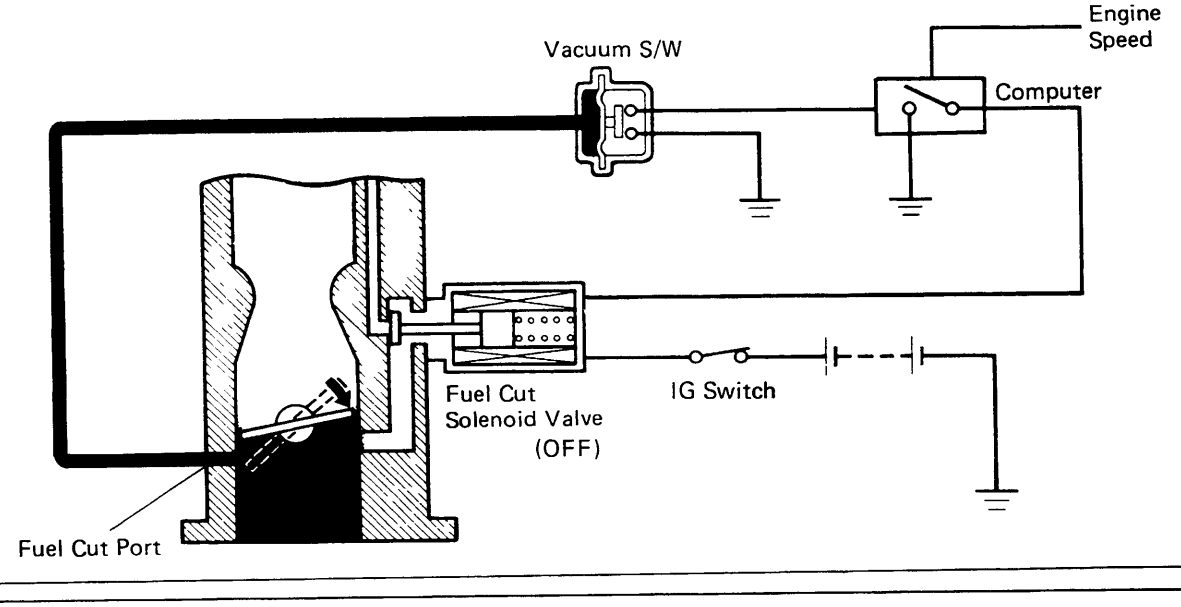

EC3902

During deceleration this system cuts off part of the fuel in the slow circuit of the carburetor. This prevents overheating and afterburning in the exhaust system.

Engine RPM	Vacuum in the Vacuum S/W	Vacuum S/W	Computer	Fuel Cut Solenoid Valve	Slow Circuit in Carburetor
Below 1,810 rpm	Low vacuum below 360 mmHg (14.17 in.Hg, 48.0 kPa)	ON	ON	ON	OPEN
	High vacuum above 425 mmHg (16.73 in.Hg, 56.7 kPa)	OFF	ON	ON	OPEN
Above 2,200 rpm	Low vacuum below 360 mmHg (14.17 in.Hg, 48.0 kPa)	ON	ON	ON	OPEN
	High vacuum above 425 mmHg (16.73 in.Hg, 56.7 kPa)	OFF	OFF	OFF	CLOSED

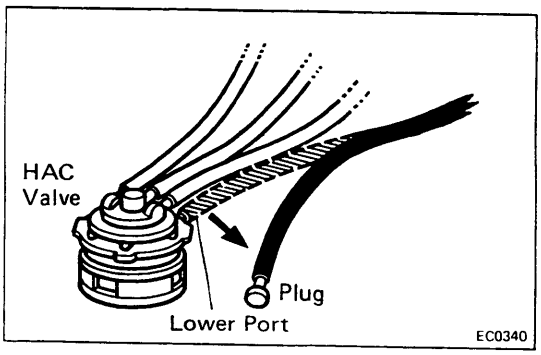

PREPARATION:
(For vehicles with HAC system)
Disconnect the vacuum hose from the lower port of the H. valve, and plug the hose end.

A03082

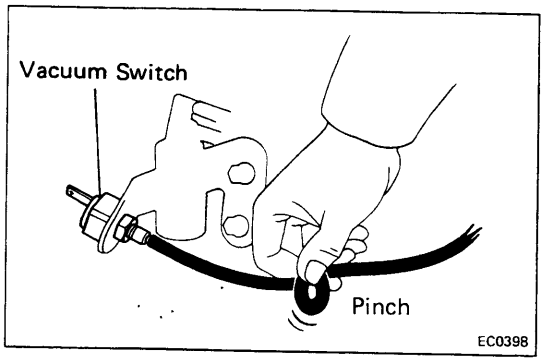

INSPECTION OF DECELERATION FUEL CUT SYSTEM

CHECK SYSTEM OPERATION

(a) Connect a tachometer to the engine.

(b) Start the engine.

(c) Check that the engine runs normally.

(d) Pinch off the vacuum hose to the vacuum switch.

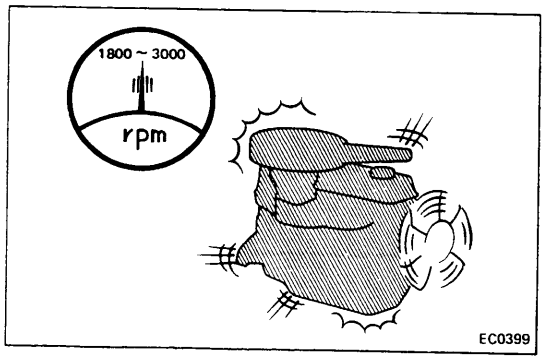

(e) Gradually increase engine speed to 3,000 rpm. Check that the engine misfires slightly between 1,800 and 3,000 rpm.

CAUTION: Perform this inspection quickly to avoid ove heating the catalytic converter.

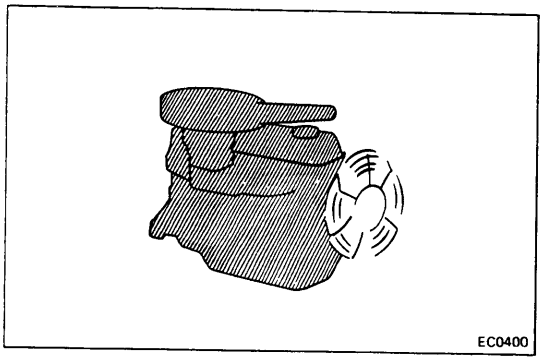

(f) Release the pinched hose. Again gradually increase the engine speed to 3,000 rpm and check that the engine operation returns to normal.

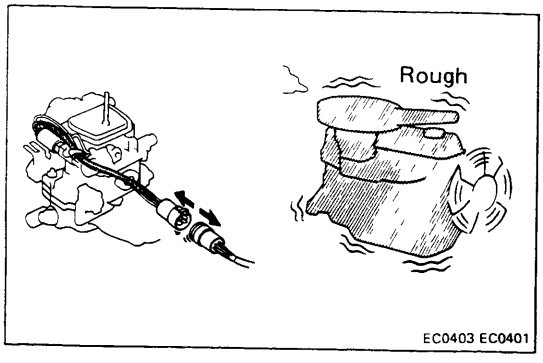

(g) With the engine idling, unplug the wiring connector to the solenoid valve. Check that the engine idles rough or dies.

CAUTION: Perform this inspection quickly to avoid otherheating the catalyst.

(h) Stop the engine, and reconnect the wiring. Remo the tachometer.

IF NO PROBLEM IS FOUND WITH THIS INSPECTION, THE SYSTEM IS OKAY, OTHERWISE INSPECT EACH PART

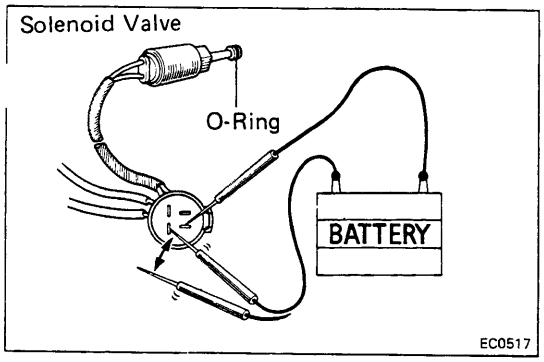

INSPECTION OF FUEL CUT SOLENOID VALVE

(a) Remove the solenoid valve.

(b) Connect the two terminals and the battery terminals as shown.

(c) Check that you can feel a "click" from the solenoid valve when the battery is connected and disconnected.

(d) Check the O-ring for damage.

If problem is found, replace the solenoid valve or O-ring.

(e) Reinstall the valve and reconnect the wiring connector.

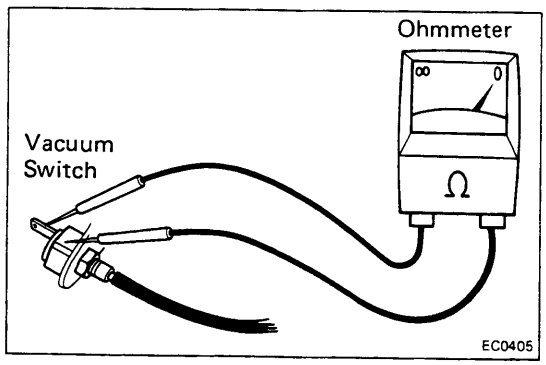

INSPECTION OF VACUUM SWITCH

(a) Using an ohmmeter, check for continuity between the switch terminal and switch body.

A03083

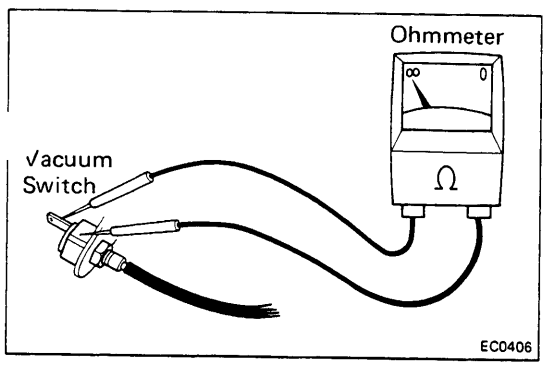

(b) Start the engine.

(c) Using an ohmmeter, check that there is no continuity between the switch terminal and the body.

If a problem is found, replace the vacuum switch.

7. Idle Advance System

With HAC system: Refer to page EC-48 of HAC syste-

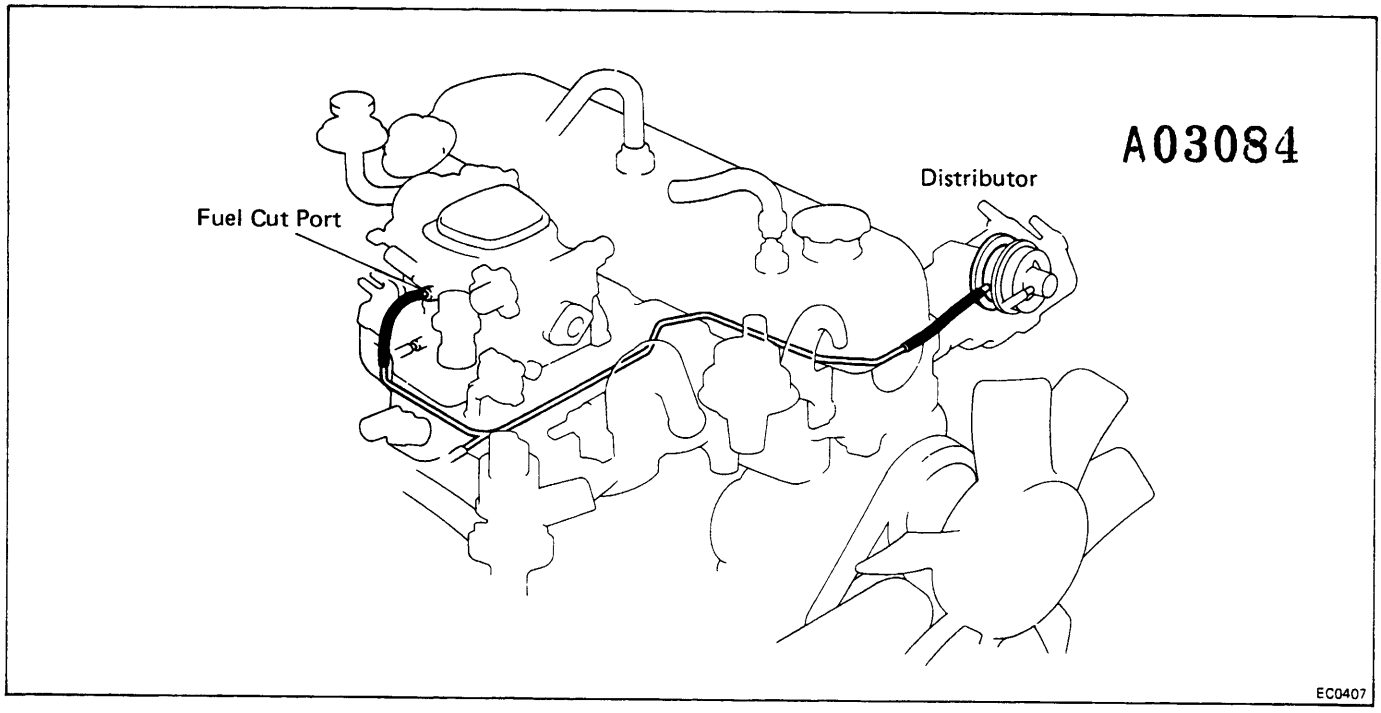

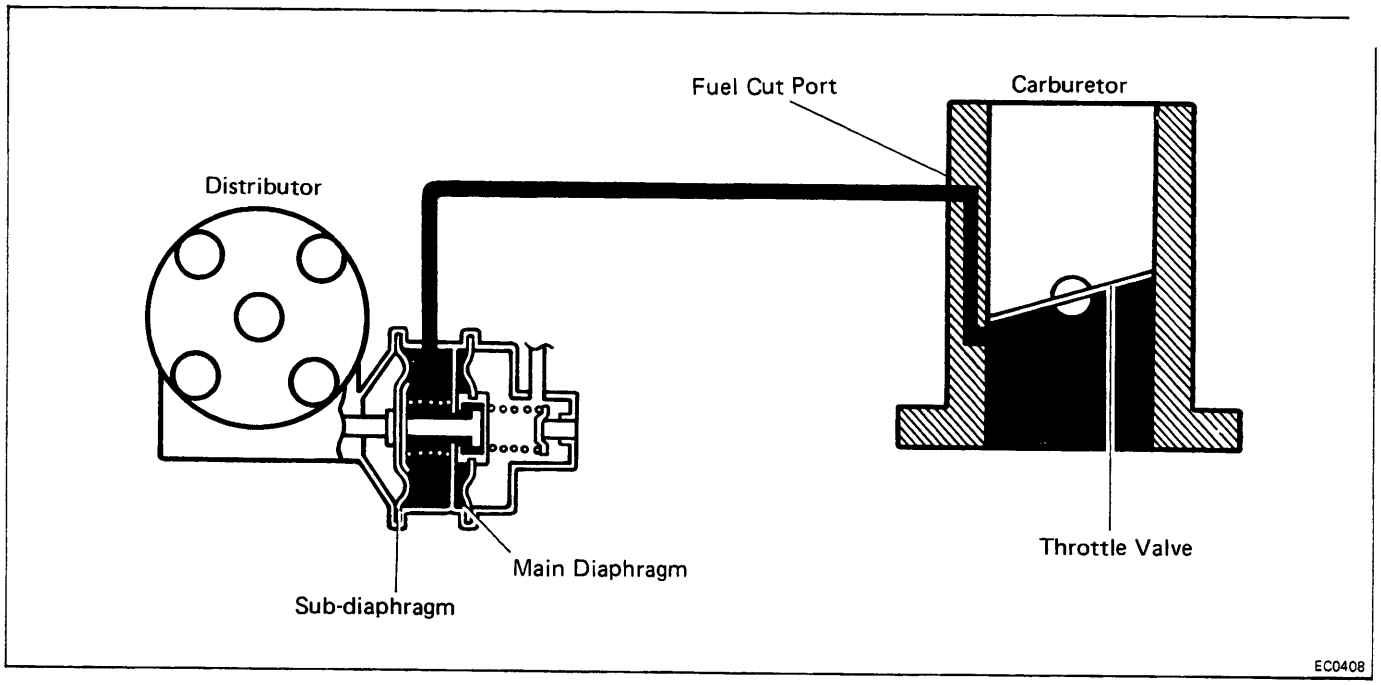

To improve fuel economy at idle, this system advances the ignition timing only while the engine is idling.

Condition	Distributor Sub-diaphragm	Sub-vacuum Advance
Idling	Pulled by fuel cut port vacuum	ADVANCED (+12°)
Cruising	Not pulled	NOT ADVANCED

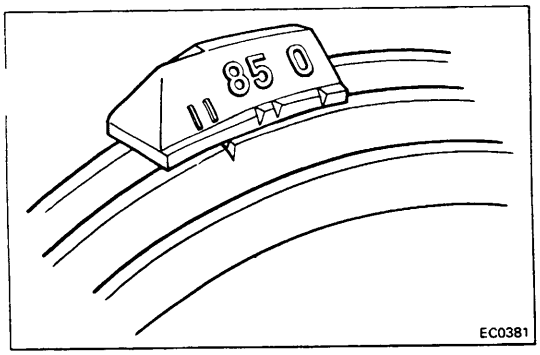

INSPECTION OF IDLE ADVANCE SYSTEM

CHECK IDLE ADVANCE SYSTEM OPERATION

(a) Warm up the engine to normal operating temperature.

(b) Check the ignition timing at idle.

Ignition timing: About 12° BTDC @ Max. 950 rpm

A03085

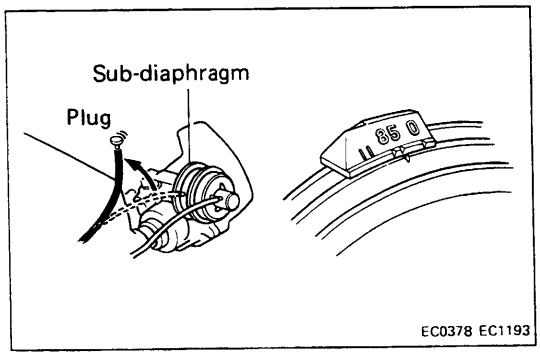

(c) Disconnect the vacuum hose from the distributor sub-diaphragm and plug the hose end.

(d) Check the ignition timing at idle.

Ignition timing: 0° BTDC @ Max. 950 rpm

(e) Reconnect the vacuum hose and remove the timing light.

IF NO PROBLEM IS FOUND WITH THIS INSPECTION, THE SYSTEM IS OKAY; OTHERWISE INSPECT EACH PART

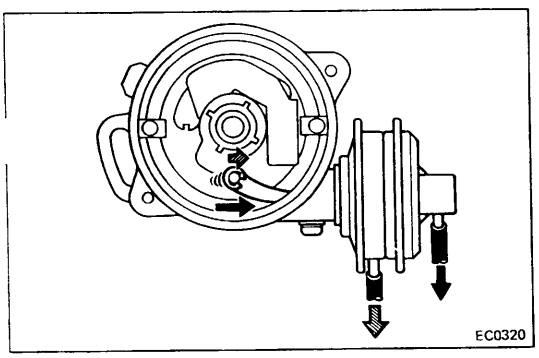

INSPECTION OF DISTRIBUTOR VACUUM ADVANCER

CHECK OPERATION OF VACUUM ADVANCER BY APPLYING VACUUM

(a) Remove the distributor cap and rotor.

(b) Check that the vacuum advancer moves is accordance with the vacuum.

(c) Reinstall the rotor and distributor cap.

If a problem is found, repair or replace the distributor vacuum advancer.

8. Cold Mixture Heater (CMH) System

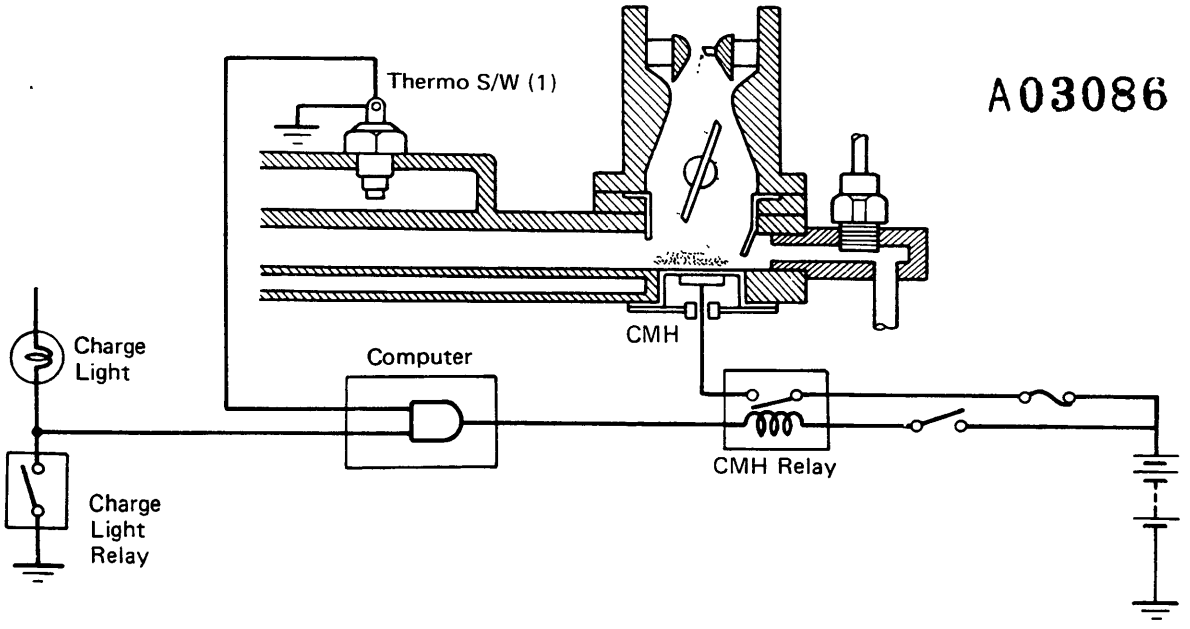

To reduce cold engine emission and improve drivability, the intake manifold riser is heated during cold engine operation to accelerate vaporization of the liquid fuel.

IG S/W	Engine	Coolant Temp.	Thermo S/W (1)	Computer	CMH Relay	CMH
OFF	Not running	—	—	—	OFF	OFF
ON	Not running	—	—	OFF	OFF	OFF
	Running	Below 43°C (109°F)	ON	ON	ON	ON (Heated)
		Above 55°C (131°F)	OFF	OFF	OFF	OFF

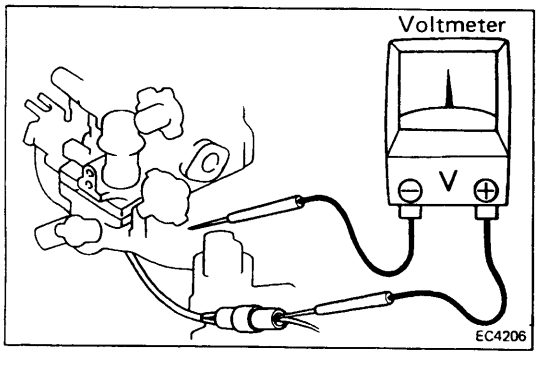

INSPECTION OF CMH SYSTEM

1. **START ENGINE**
2. **CHECK CMH WITH COLD ENGINE**
   (a) The coolant temperature should be below 43°C (109°F).
   (b) Using a voltmeter check that there is voltage between the positive (+) terminal and intake manifold.

CAUTION: The voltmeter probe should be inserted from the rear side of the connector.

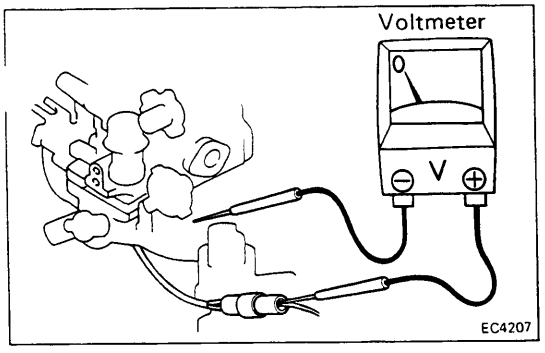

3. CHECK CMH WITH WARM ENGINE
   (a) Warm up the engine to above 55°C (131°F).
   (b) Check that there is no voltage.

IF NO PROBLEM IS FOUND WITH THIS INSPECTION, THE SYSTEM IS OKAY; OTHERWISE INSPECT EACH PART

A03087

INSPECTION OF THERMO SWITCH (1)

(See page EC-23)

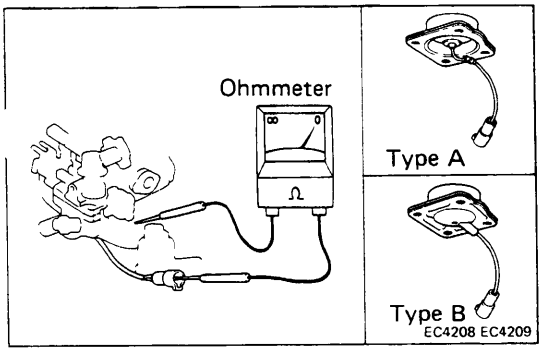

INSPECTION OF CMH

MEASURE RESISTANCE

(a) Unplug the wiring connector.

(b) Using an ohmmeter, measure the resistance between the positive (+) terminal and intake manifold.

Resistance at 20°C (68°F):
Type A (ND) 0.35 — 1.0 Ω
Type B (TDK) 0.5 — 2.0 Ω

(c) Plug in the wiring connector.

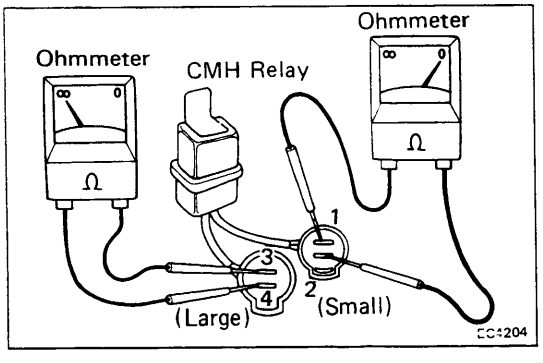

INSPECTION OF CMH RELAY

1. INSPECT RELAY CONTINUITY

Check that there is continuity between terminals 1 and 2. Check that there is no continuity between terminals 3 and 4.

Relay location: Right fender apron

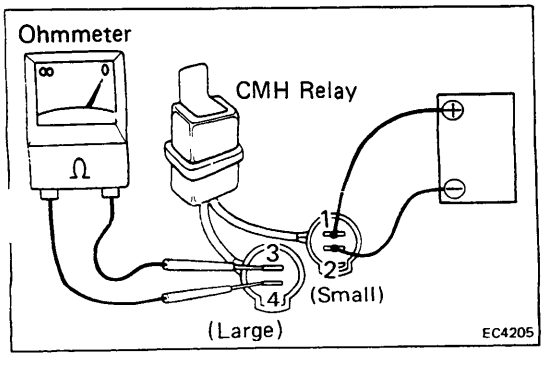

2. INSPECT RELAY OPERATION

Check the continuity between terminals 3 and 4 with battery voltage applied between terminals 1 and 2.

EFI SYSTEM

	Page
SYSTEM DESCRIPTION	FI-2
PRECAUTIONS	FI-4
INSPECTION PRECAUTIONS	FI-4
TROUBLESHOOTING	FI-9
DIAGNOSIS SYSTEM	FI-22
TROUBLESHOOTING WITH VOLT/OHMMETER	FI-27
TROUBLESHOOTING FOR EFI ELECTRONIC CIRCUIT WITH VOLT/OHMMETER	FI-28
FUEL SYSTEM	FI-42
Fuel Pump	FI-42
Cold Start Injector	FI-47
Pressure Regulator	FI-49
Injector	FI-50
Fuel Tank and Line	FI-55
AIR INTAKE SYSTEM	FI-56
Air Flow Meter	FI-56
Air Valve	FI-58
Throttle Body	FI-59
ELECTRONIC CONTROL SYSTEM	FI-63
Location of Electronic Control Parts	FI-63
Main Relay	FI-64
Circuit Opening Relay	FI-65
Solenoid Resistor	FI-66
Start Injector Time Switch	FI-67
Water Thermo Sensor	FI-68
Ox Sensor	FI-69
ECU	FI-72
Fuel Cut RPM	FI-74

SYSTEM DESCRIPTION

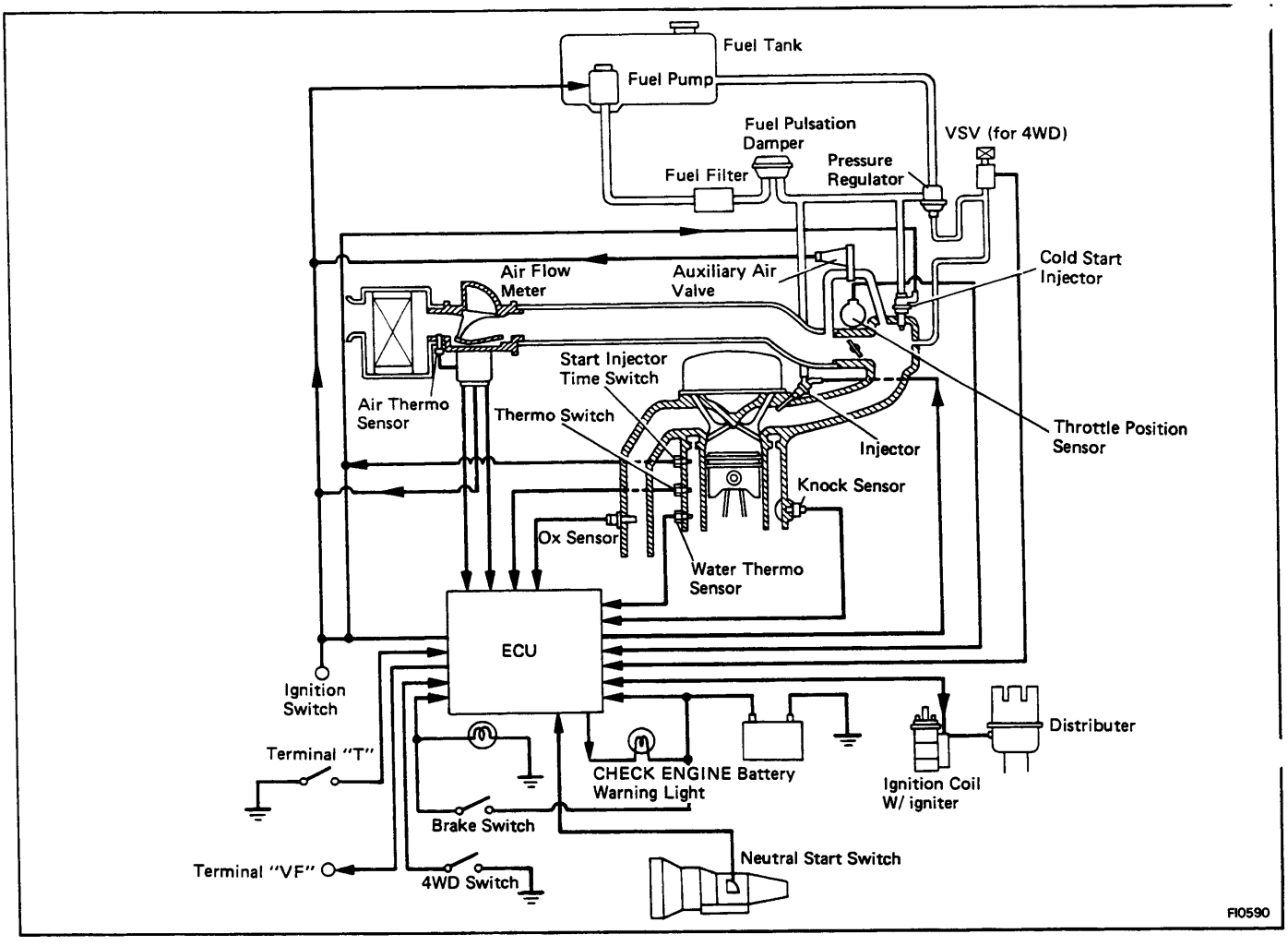

The EFI used on Toyotas has three basic systems.

FUEL SYSTEM

An electric fuel pump supplies sufficient fuel, under a constant pressure, to the EFI injectors. These injectors inject a metered quantity of fuel into the intake manifold in accordance with signals from the ECU. Each injector injects, at the same time, one half of the fuel required for ideal combustion with each engine revolution.

AIR INDUCTION SYSTEM

The air induction system provides sufficient air for engine operation.

ELECTRONIC CONTROL SYSTEM

The 22R-EC engine is equipped with a Toyota Computer Control System (TCCS) which centrally controls the EFI, ESA, Diagnosis systems, etc. by means of an Electronic Control Unit (ECU — formerly EFI computer) employing a microcomputer.

By means of the ECU, the TCCS controls the following functions:

. Electronic Fuel Injection (EFI)

The ECU receives signals from various sensors indicating changing engine operation conditions such as:

Intake air volume
Intake air temperature
Coolant temperature
Engine rpm
Acceleration/deceleration
Exhaust Ox content etc.

These signals are utilized by the ECU to determine the injection duration necessary for an optimum air-fuel ratio.

2. Electronic Spark Advance (ESA)

The ECU is programmed with data for optimum ignition timing under any and all operating conditions. Using data provided by sensors which monitor various engine functions (rpm, intake air volume coolant temperature, etc.), the microcomputer (ECU) triggers the spark at precisely the right instant.
(See IG section)

3. Diagnostics

The ECU detects any malfunctions or abnormalities in the sensor network and lights a "CHECK ENGINE" warning light on the instrument panel. At the same time, the trouble is identified and a diagnostic code is recorded by the ECU. There are 12 different diagnostic codes, including "normal operation" and these can be confirmed by use of an analog voltmeter.
(See page FI-22)

4. Fail-Safe Function

In the event of ECU malfunction, a back-up circuit will take over to provide minimal drivability. Simultaneously, the "CHECK ENGINE" warning light is activated.

PRECAUTIONS

1. **Before working on the fuel system, disconnect the negative terminal from the battery.**

   NOTE: Any diagnosis code retained by the computer will be cleared when the battery terminal is removed. Therefore, if necessary, read the diagnosis before removing the battery terminal.

2. **When working on the fuel system, do not smoke or work near any fire hazard.**

3. **Keep gasoline off rubber or leather parts.**

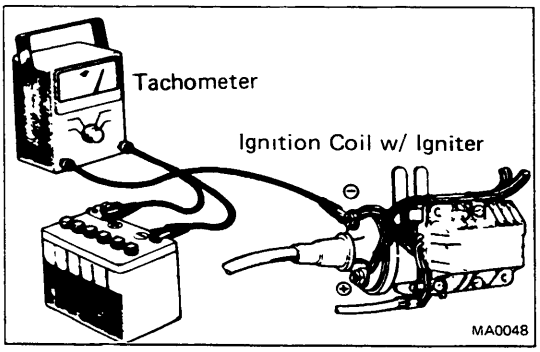

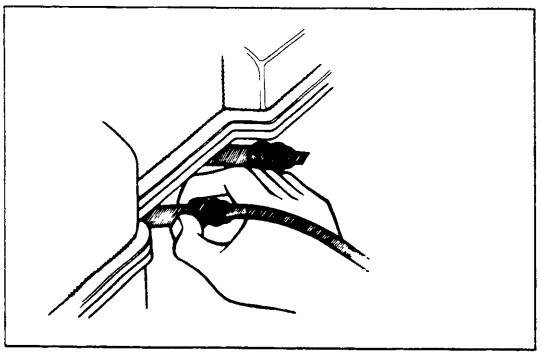

INSPECTION PRECAUTIONS

MAINTENANCE PRECAUTIONS

1. **INSURE CORRECT ENGINE TUNE-UP**

2. **PRECAUTIONS WHEN CONNECTING GAUGE**
   (a) Connect the tachometer (+) terminal to the ignition (−) terminal.
   (b) Use the battery as the power source for the timing light, tachometer, etc.

3. **IN EVENT OF ENGINE MISFIRE, THE CATALYTIC CONVERTER MAY OVERHEAT. THEREFORE, THE FOLLOWING PRECAUTIONS SHOULD BE TAKEN**
   (a) Insure correct drive belt adjustment.
   (b) Insure proper connection of battery terminals, etc.
   (c) Handle high-tension wires carefully.
   (d) After repair work, insure that the ignition coil terminals and all other ignition system lines are reconnected securely.
   When cleaning the engine compartment, be especially careful to protect the electrical system from water.

4. **PRECAUTIONS WHEN HANDLING Ox SENSOR**
   (a) Do not allow Ox sensor to receive an impact.
   (b) Do not allow water to come into contact with the sensor or attempt to cool it.

WHEN CAR IS EQUIPPED WITH A MOBILE RADIO SYSTEM (HAM, CB, ETC.)

The ECU has been designed so that it will not be affected by outside interference.
However, if your vehicle is equipped with an amature radio transceiver, etc. (even one with about 10 W output), it may, at times, have an effect upon ECU operation, especially if the antenna and feeder are installed nearby.
Therefore, observe the following precautions.

(a) Install the antenna as far as possible from the ECU. The ECU is located into the right side kick panel so the antenna should be installed at the rear, left side of the vehicle.
If installing in the bumper, do so on the right side, if possible.

(b) Keep the antenna feeder as far away as possible from the ECU wires — at least 20 cm (7.87 in.) — and, especially, do not wind them together.

(c) Insure that the feeder and antenna are properly adjusted.

(d) Do not equip your vehicle with a powerful mobile radio system.

INTAKE SYSTEM

1. Separation of the engine oil level gauge, oil filler cap, PCV hose, etc. may cause the engine to run out of tune.
2. Disconnection, looseness or cracks in the parts of the air intake system between the air flow meter and cylinder head will allow air suction and cause bad engine tune.

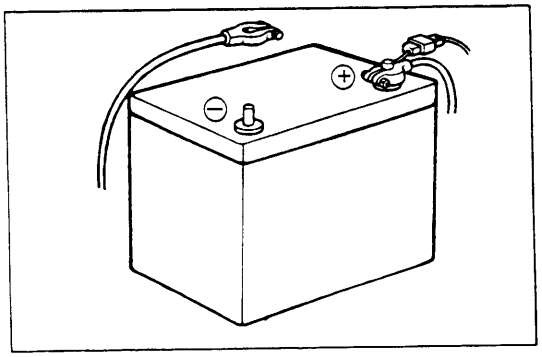

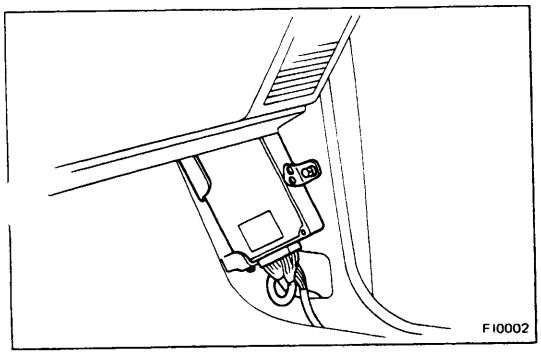

ELECTRONIC PARTS

1. Before removing EFI wiring connectors, terminals, etc., first disconnect power by either turning OFF the ignition switch or disconnecting the battery terminals.
2. When installing a battery, be especially careful not to incorrectly connect the positive and negative cables.
3. Do not permit parts to receive a severe impact during removal or installation. Handle all EFI parts carefully and, in particular, the ECU.
4. Do not be careless during troubleshooting as there are numerous transistor circuits and even slight terminal contact can cause further troubles.
5. Do not open the ECU cover.
6. When inspecting during rainy weather, take care to prevent entry of water. Also, when washing the engine compartment, prevent water from getting on the EFI parts and wiring connectors.
7. Parts should be replaced as an assembly.

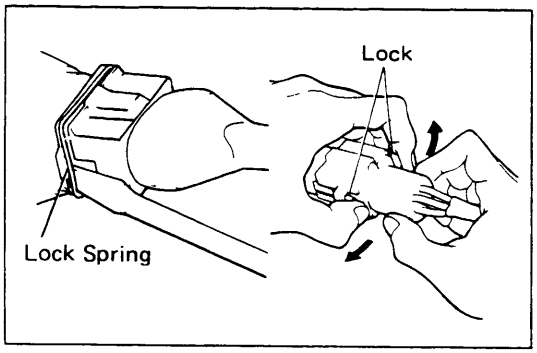

8. Sufficient care is required when pulling out and inserting wiring connectors.
   (a) Release the lock and pull out the connector, pul on the connectors.

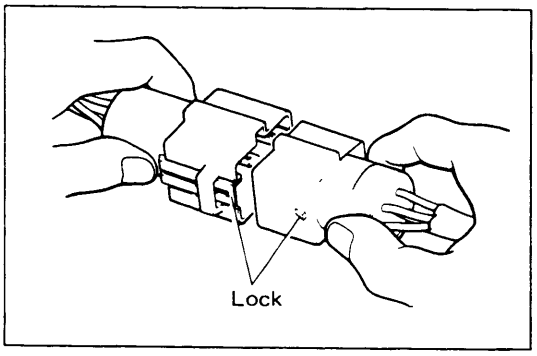

   (b) Fully insert the connector and insure that it is locked.

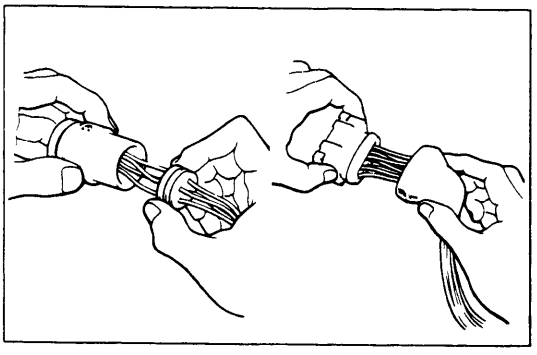

9. When inspecting a connector with a circuit tester.
   (a) Carefully take out the water-proofing rubber if it is a water-proof type connector.

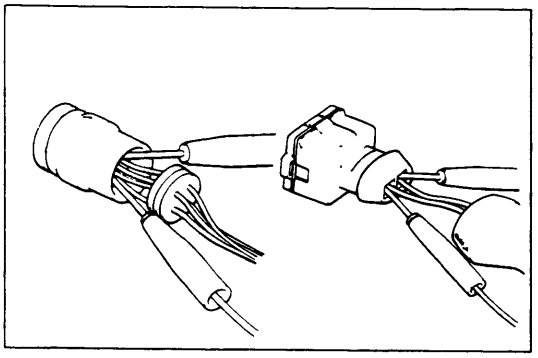

   (b) Insert the tester probe into the connector from the wiring side when checking the continuity, amperage or voltage.
   (c) Do not apply unnecessary force to the terminal.
   (d) After checking, install the water-proofing rubber on the connector securely.

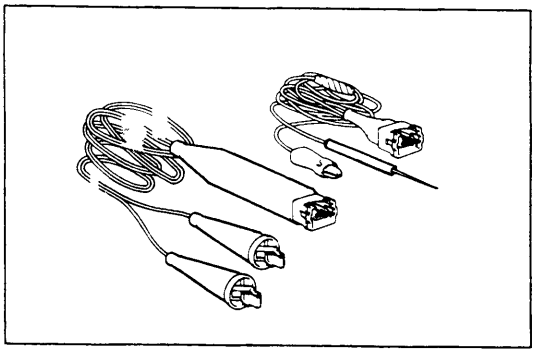

10. Use SST for inspection or test of the injector, cold start injector or its wiring connector.
    SST 09842-30020 and 09842-30050

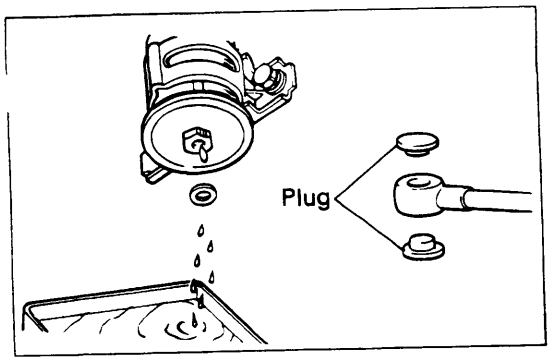

FUEL SYSTEM

1. When disconnecting the connection of the high fuel pressure line, a large amount of gasoline will come out so observe the following procedure.
   (a) Put a container under the connection.
   (b) Slowly loosen the connection.
   (c) Disconnect the connection.
   (d) Plug the connection with a rubber plug.

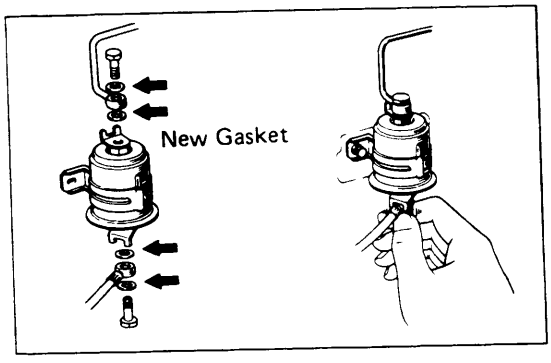

2. When connecting the flare nut on the high pressure pipe union, observe the following procedure.
   (a) Always use a new gasket.
   (b) Apply a thin coat of oil to the flare and first tighten the flare nut by hand.

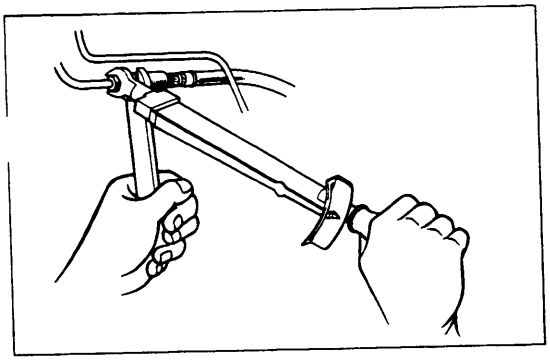

   (c) Then tighten the nut to the specified torque.
   Torque: 310 kg-cm (22 ft-lb, 30 N·m)

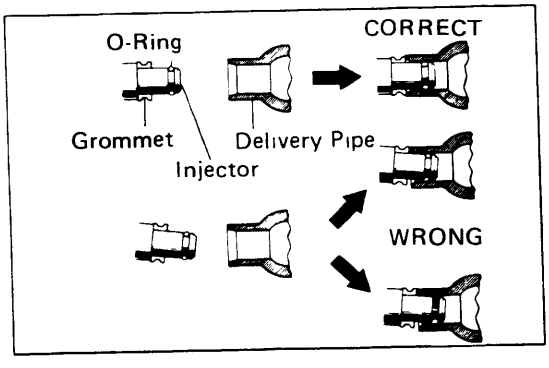

3. Take the following precautions when removing and installing the injectors.
   (a) Never re-use an O-ring.
   (b) When placing an O-ring on the injector,use care not to damage it in any way.
   (c) Lubricate the O-ring with spindle oil or gasoline before installing — never use engine, gear or brake oil.

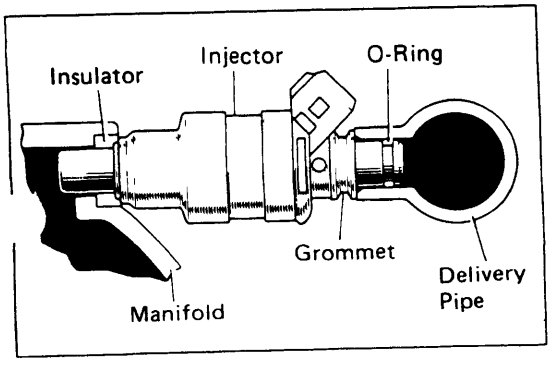

4. Install the injector to the delivery pipe and intake manifold as shown in the figure.

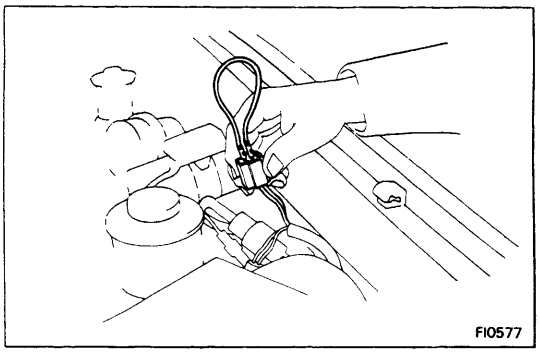
FI0577

5. Confirm that there are no fuel leaks after performing maintenance on the fuel system.
   (a) With engine stopped, turn the ignition switch o
   (b) Short circuit terminals of the fuel pump check connector.

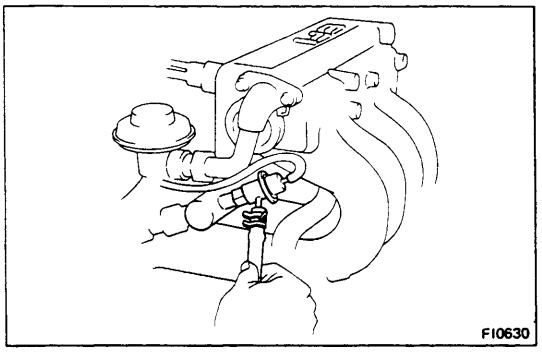
FI0630

(c) When the pressure regulator fuel return hose (shown in the figure at left), is pinched, the pressure within the high pressure line will rise to about 4 kg/cm² (57 psi, 392 kPa). In this state, check to see that there are no leaks from any part of the fuel system.

CAUTION: Always pinch the hose. Avoid bending as it may cause the hose to crack.

TROUBLESHOOTING

TROUBLESHOOTING HINTS

1. Engine troubles are usually not caused by the EFI system. When troubleshooting, always first check the condition of the other systems.
   (a) Electronic source
      - Battery
      - Fusible links
      - Fuses

   (b) Fuel supply
      - Fuel leakage
      - Fuel filter
      - Fuel pump

   (c) Ignition system
      - Spark plug
      - High-tension cord
      - Distributor
      - Igniter and ignition coil

   (d) Air intake system
      - Vacuum leaks

   (e) Emission control system
      - EGR system
      - PCV system

   (f) Others
      - Ignition timing
      - Idle speed
      - etc.

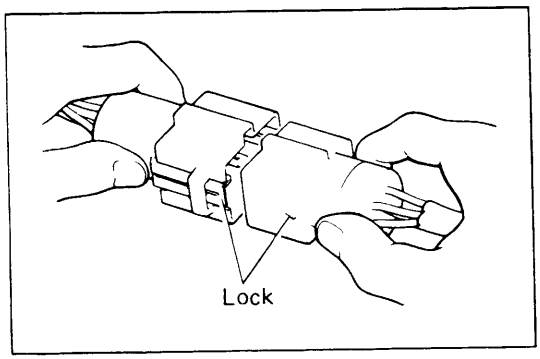

2. The most frequent cause of problems is simply a bad contact in wiring connectors. So always make sure that connections are secure.
   When inspecting the connector, pay particular attention to the following points:
   (a) Check to see that the terminals are not bent.
   (b) Check to see that the connector is pushed in completely and locked.

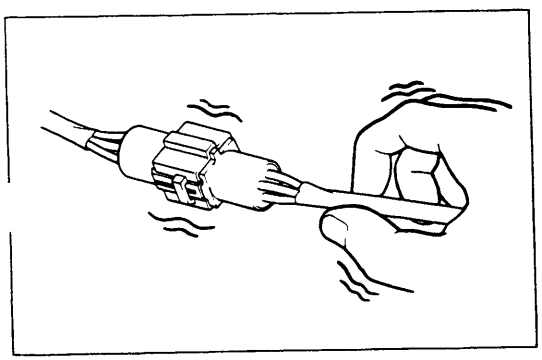

   (c) Check to see that there is no signal change when the connector is slightly tapped or wiggled.

3. Sufficiently troubleshoot for other causes before replacing the ECU. The ECU is of high quality and it is expensive.

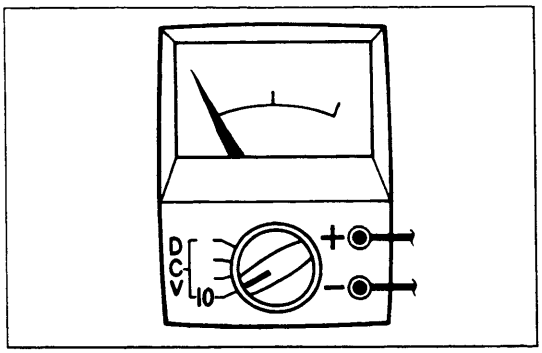

4. Use a volt/ohmmeter with a high impedance (10 kΩ/V minimum) for troubleshooting an electrical circuit.

TROUBLESHOOTING PROCEDURES

SYMPTOM—DIFFICULT TO START OR NO START (ENGINE WILL NOT CRANK OR CRANKS SLOWLY)

CHECK ELECTRONIC SOURCE

BAD →
1. Battery
   (1) Connection
   (2) Gravity — Drive belt — Charging system
   (3) Voltage
2. Fusible link

OK ↓

CHECK STARTING SYSTEM

BAD →
1. Ignition switch
2. Neutral start switch for A/T
3. Starter
4. Wiring/Connection

SYMPTON — DIFFICULT TO START OR NO START (CRANKS OK)

CHECK DIAGNOSIS SYSTEM
Check for output of diagnostic code.
(See page FI-22)

Malfunction code → Diagnostic code(s) (See page FI-25)

Normal code ↓

CHECK FOR VACUUM LEAKS IN AIR INTAKE LINE

BAD →
1. Hose connections
2. PCV hoses
3. EGR system — EGR valve stays open

OK ↓

CHECK IGNITION SPARK
1. Unplug connectors of injector resistor and start injector time switch.
2. Check by holding spark plug cord 8 — 10 mm (0.31 — 0.39 in.)away from engine block while engine is cranking.
   A strong spark should be noted.

BAD →
1. Plug cords
2. High-tension cords
3. Distributor
4. Ignition coil, igniter
5. ECU

OK ↓

CHECK IGNITION TIMING
STD: 5° BTDC at idle
(T — E_1 Short Circuit)

NO → Adjust ignition timing

OK ↓

CHECK FUEL SUPPLY TO INJECTOR
1. Fuel in tank
2. Fuel pressure in fuel line
   (1) Short fuel pump check terminals.
   (2) Fuel pressure at fuel hose of cold start injector can be felt.
   (See page FI-43)

BAD →
1. Fuel line — Leakage — Deformation
2. Fuse
3. Circuit opening relay (See page FI-65)
4. Fuel pump (See page FI-42)
5. Fuel filter
6. Fuel pressure regulator (See page FI-49)

OK ↓

CHECK FUEL PUMP SWITCH IN AIR FLOW METER
Check continuity between terminals Fc and E_1 while measuring plate of air flow meter is open.

BAD → Air flow meter (See page FI-54)

OK ↓

CHECK SPARK PLUGS
Plug gap: 0.8 mm (0.031 in.)

NOTE:
Check compression pressure if necessary.

NO →
1. Spark plug
2. Compression pressure
   Limit: 10.0 kg/cm² (142 psi, 981 kPa) at 250 rpm
3. Injector — Leakage (See page FI-50)

NO (All Plugs Wet) →
1. Injector(s) — Shorted
2. Injector wiring between resistor and ECU shorted
3. Cold start injector — Leakage (See page FI-47)
4. Start injector time switch (See page FI-67)

OK CONTINUED ON PAGE FI-12

OK CONTINUED FROM PAGE FI-11

CHECK AIR VALVE
1. Disconnect air hose from air valve.
2. Check that the air valve opens when cold.

Room temp.: Below 20°C (68°F)

NO →
1. Air valve (See page FI-58)
2. Water hoses
3. Air hoses

OK

CHECK EFI ELECTRONIC CIRCUIT USING VOLT/OHMMETER

NO →
1. Wiring connection
2. Power to ECU
   (1) Fusible link
   (2) Fuse (EFI 15A)
   (3) Main relay
3. Air flow meter
4. Water thermo sensor
5. Injection signal
   (1) Injector wiring
   (2) Resistor
   (3) ECU

SYMPTOM — ENGINE OFTEN STALLS

HECK DIAGNOSIS SYSTEM
Check for output of diagnostic code.
(See page FI-22)

Malfunction code → Diagnostic code(s) (See page FI-25)

Normal code ↓

CHECK FOR VACUUM LEAKS IN AIR INTAKE LINE

BAD →
1. Hose connections
2. PCV hoses
3. EGR system — EGR valve stays open

OK ↓

CHECK FUEL SUPPLY TO INJECTOR
1. Fuel in tank
2. Fuel pressure in fuel line
   (1) Short fuel pump check terminals.
   (2) You can feel fuel pressure at fuel hose of fuel filter. (See page FI-6)

BAD →
1. Fuel line — Leakage — Deformation
2. Fuse
3. Circuit opening relay (See page FI-65)
4. Fuel pump (See page FI-42)
5. Fuel filter
6. Fuel pressure regulator (See page FI-49)

OK ↓

CHECK AIR FILTER ELEMENT

BAD → Element — Clean or replace

OK ↓

CHECK IDLE SPEED
STD: 750 rpm

BAD → Adjust idle speed

OK ↓

CHECK IGNITION TIMING
STD: 5° BTDC at idle
($T - E_1$ Short Circuit)

BAD → Adjust ignition timing

OK ↓

CHECK SPARK PLUGS
Plug gap: 0.8 mm (0.031 in.)
NOTE:
Check compression pressure if necessary.

BAD →
1. Spark plug
2. Compression pressure
   Limit: 10.0 kg/cm² (142 psi, 981 kPa) at 250 rpm

OK ↓

CHECK COLD START INJECTOR
(See page FI-47)

BAD →
1. Cold start injector
2. Start injector time switch
   (See page FI-67)

OK ↓ CONTINUED ON PAGE FI-14

OK CONTINUED FROM PAGE FI-13

CHECK AIR VALVE
1. Disconnect air hose from air valve.
2. Check that air valve opens when cold.

Room temp.: Below 20°C (68°F)

BAD → 1. Air valve (See page FI-58)
2. Water hoses
3. Air hoses

OK

RECHECK FUEL PRESSURE
(See page FI-42)

BAD → 1. Fuel pump (See page FI-42)
2. Fuel filter
3. Fuel pressure regulator (See page FI-49)

OK

CHECK INJECTORS
(See page FI-50)

BAD → Injection condition

OK

CHECK EFI ELECTRONIC CIRCUIT USING VOLT/OHMMETER

BAD → 1. Wiring connection
2. Power to ECU
   (1) Fusible link
   (2) Main relay
3. Air flow meter
4. Water thermo sensor
5. Injection signal
   (1) Injector wiring
   (2) Resistor
   (3) ECU

SYMPTOM — ENGINE SOMETIMES STALLS

CHECK DIAGNOSIS SYSTEM
Check for output of diagnostic code.
(See page FI-22)

Malfunction code → Diagnostic code(s) (See page FI-25)

Normal code

CHECK AIR FLOW METER
(See page FI-56)

BAD → Air flow meter

OK

CHECK WIRING CONNECTORS AND RELAYS
Check that there is a signal change when the connector or relay is slightly tapped or wiggled.

BAD → 1. Connector
2. Main relay (See page FI-64)
3. Circuit opening relay (See page FI-65)

SYMPTOM — ROUGH IDLING AND/OR MISSING

CHECK DIAGNOSIS SYSTEM
Check for output of diagnostic code.
(See page FI-22)

Malfunction code → Diagnostic code(s) (See page FI-25)

Normal code ↓

CHECK FOR VACUUM LEAKS IN AIR INTAKE LINE

BAD → 1. Hose connections
2. PCV hoses
3. EGR system — EGR valve stays open

OK ↓

CHECK AIR FILTER ELEMENT

BAD → Element — Clean or replace

OK ↓

CHECK IDLE SPEED
STD: 750 rpm

BAD → Adjust idle speed

OK ↓

CHECK IGNITION TIMING
STD: 5° BTDC at idle
($T - E_1$ Short Circuit)

BAD → Adjust ignition timing

OK ↓

CHECK SPARK PLUGS AND PLUG CORDS
Plug gap: 0.8 mm (0.031 in.)
NOTE:
Check compression pressure if necessary.

BAD → 1. Spark plugs and plug cords
2. Compression pressure
Limit: 10.0 kg/cm² (142 psi, 981 kPa) at 250 rpm

OK ↓

CHECK COLD START INJECTOR
(See page FI-47)

BAD → 1. Cold start injector
2. Cold start injector time switch.
(See page FI-65)

OK ↓

CHECK FUEL PRESSURE
(See page FI-42)

BAD → 1. Fuel pump (See page FI-42)
2. Fuel filter
3. Fuel pressure regulator (See page FI-49)

OK ↓

CHECK INJECTORS
(See page FI-50)

BAD → Injection condition

OK CONTINUED ON PAGE FI-16 ↓

OK CONTINUED FROM PAGE FI-15

CHECK EFI ELECTRONIC CIRCUIT USING VOLT/OHMMETER

BAD →

1. Wiring connection
2. Power to ECU
   (1) Fusible link
   (2) Main relay
3. Air flow meter
4. Water thermo sensor
5. Air thermo sensor
6. Throttle position sensor
7. Injection signal
   (1) Injector wiring
   (2) Resistor
   (3) ECU
8. Ox sensor

SYMPTOM — HIGH ENGINE IDLE SPEED (NO DROP)

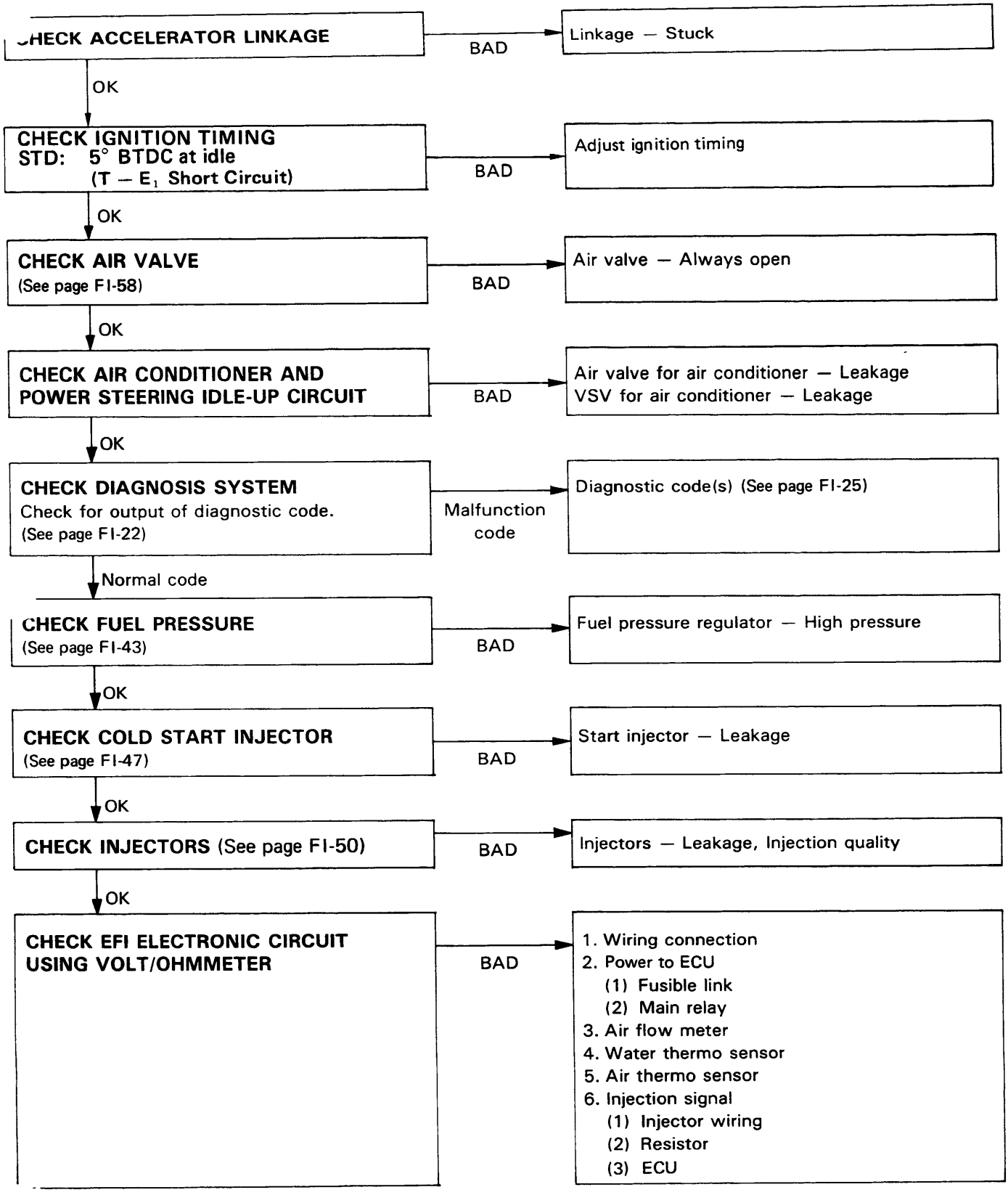

SYMPTOM — ENGINE BACKFIRES-Lean Air Fuel Mixture

CHECK DIAGNOSIS SYSTEM
Check for output of diagnostic code.
(See page FI-22)

Malfunction code → Diagnostic code(s) (See page FI-25)

Normal code ↓

CHECK FOR VACUUM LEAKS IN AIR INTAKE LINE

BAD →
1. Hose connections
2. PCV hoses
3. EGR system — EGR valve stays open

OK ↓

CHECK IGNITION TIMING
STD: 5° BTDC at idle
(T — E_1 Short Circuit)

BAD → Adjust ignition timing

OK ↓

CHECK COLD START INJECTOR
(See page FI-47)

BAD →
1. Cold start injector
2. Cold start injector time switch.
(See page FI-67)

OK ↓

CHECK FUEL PRESSURE
(See page FI-43)

BAD →
1. Fuel pump (See page FI-42)
2. Fuel filter
3. Fuel pressure regulator (See page FI-49)

OK ↓

CHECK INJECTORS
(See page FI-50)

BAD → Injectors — Clogged

OK ↓

CHECK EFI ELECTRONIC CIRCUIT USING VOLT/OHMMETER

BAD →
1. Wiring connection
2. Power to ECU
   (1) Fusible link
   (2) Main relay
3. Air flow meter
4. Water thermo sensor
5. Air thermo sensor
6. Throttle position sensor
7. Injection signal
   (1) Injection wiring
   (2) Resistor
   (3) ECU
   (4) Fuel cut signal
8. Ox sensor

SYMPTOM — MUFFLER EXPLOSION (AFTER FIRE) -Rich Air Fuel Mixture-Misfire

CHECK DIAGNOSIS SYSTEM
Check for output of diagnostic code.
(See page FI-22)

→ Malfunction code → Diagnostic code(s) (See page FI-25)

↓ Normal code

CHECK IGNITION TIMING
STD: 5° BTDC at idle
($T - E_1$ Short Circuit)

→ BAD → Adjust ignition timing

↓ OK

CHECK COLD START INJECTOR
(See page FI-47)

→ BAD →
1. Cold start injector
2. Cold start injector time switch
(See page FI-67)

↓ OK

CHECK INJECTORS

→ BAD → Injectors — Leakage

↓ OK

CHECK SPARK PLUGS AND PLUG CORDS
Plug gap: 0.8 mm (0.031 in.)
NOTE:
Check compression pressure if necessary.

→ BAD →
1. Spark plugs and plug cords
2. Compression pressure
Limit: 10.0 kg/cm² (142 psi, 981 kPa) at 250 rpm

↓ OK

CHECK EFI ELECTRONIC CIRCUIT USING VOLT/OHMMETER

→ BAD →
1. Throttle position sensor
2. Injection signal
(1) Fuel cut signal
(2) Injector wiring
(3) Resistor
(4) ECU
3. Ox sensor

SYMPTOM — ENGINE HESITATES AND/OR POOR ACCELERATION

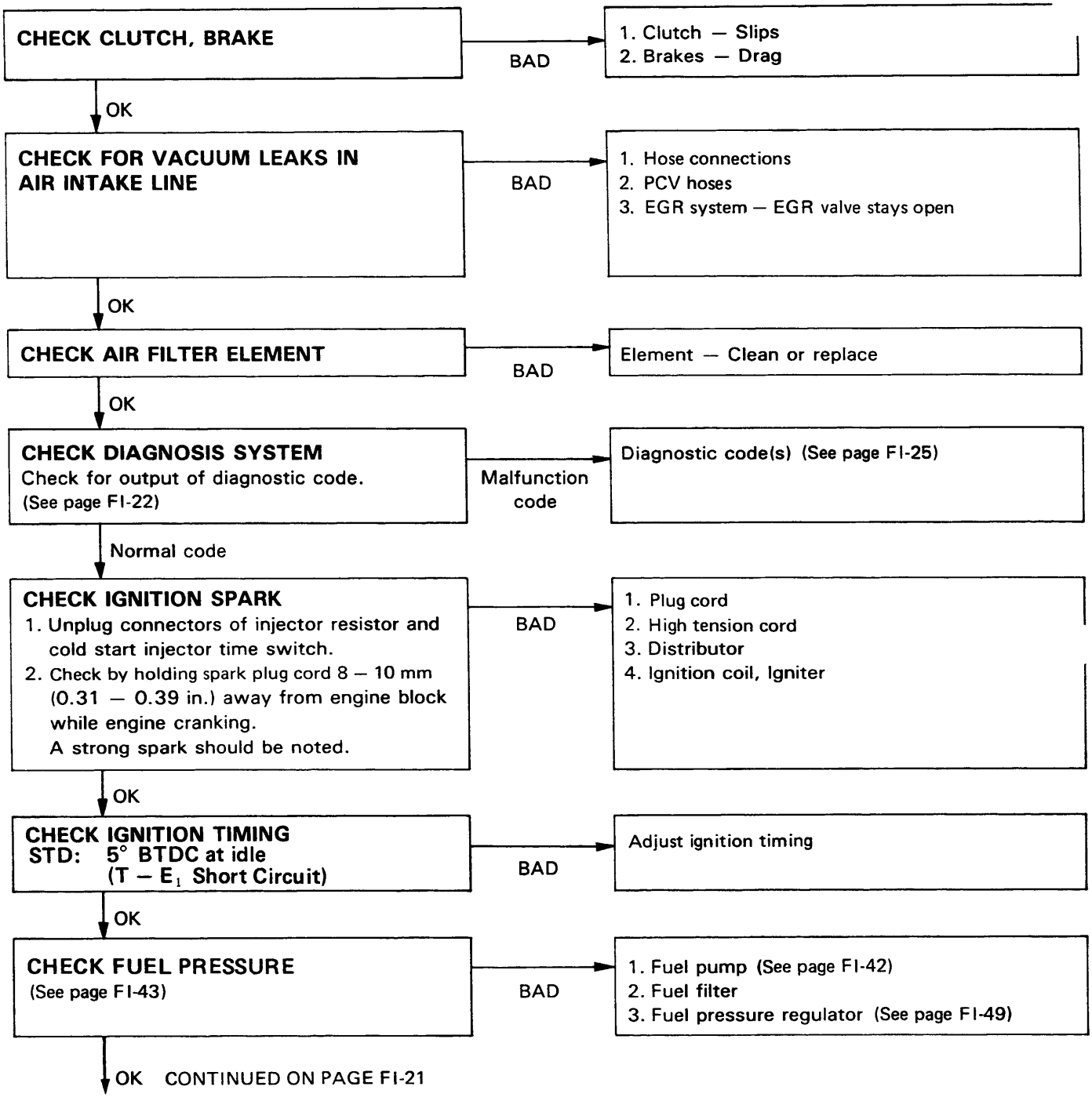

OK CONTINUED FROM PAGE FI-20

CHECK INJECTORS
(See page FI-50)

BAD → Injection condition

OK

CHECK SPARK PLUGS
Plug gap: 0.8 mm (0.031 in.)
NOTE:
Check compression pressure if necessary.

BAD →
1. Spark plugs
2. Compression pressure
   Limit: 10.0 kg/cm² (142 psi, 981 kPa) at 250 rpm

OK

CHECK EFI ELECTRONIC CIRCUIT USING VOLT/OHMMETER

BAD →
1. Wiring connection
2. Power to ECU
   (1) Fusible link
   (2) Main relay
3. Air flow meter
4. Water thermo sensor
5. Air thermo sensor
6. Throttle position sensor
7. Injection signal
   (1) Injector wiring
   (2) Resistor
   (3) ECU

DIAGNOSIS SYSTEM

DESCRIPTION

By analyzing various signals as shown in the later table (page FI-25) the ECU detects system malfunctions which are related to the various operating parameter sensors or to the actuator. The ECU stores the failure code associated with the detected failure until the diagnostic system is cleared by removing the EFI fuse with ignition switch off.

A "CHECK ENGINE" warning light on the instrument panel informs the driver that a malfunction has been detected. The light goes out automatically when the malfunction has been cleared.

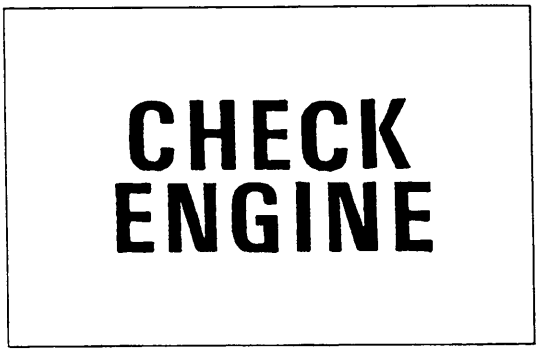

"CHECK ENGINE" LIGHT CHECK

1. The "CHECK ENGINE" warning light will come on when the ignition switch is placed at ON and the engine is not running.
2. When the engine is started, the "CHECK ENGINE" warning light should go out.

   If the light remains on, the diagnosis system has detected a malfunction in or abnormality in the system.

OUTPUT OF DIAGNOSTIC CODES

To obtain an output of diagnostic codes, proceed as follows:

1. Initial conditions
   (a) Battery voltage above 11 volts.
   (b) Throttle valve fully closed (throttle position sensor IDL points closed).
   (c) Transmission in neutral postion.
   (d) Accessory switches OFF.
   (e) Engine at normal operating temperature.
2. Turn the ignition switch to ON. Do not start the engine.
3. Using a sub-wire short terminals $T-E_1$ of the Check Engine Connector located near the ignition coil.

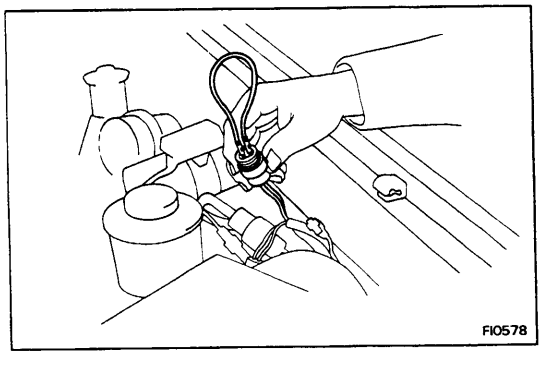

A03885

4. Read the diagnostic code as indicated by the number of flashes of the "CHECK ENGINE" warning light.

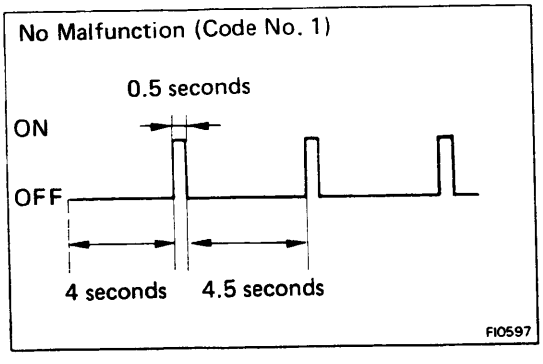

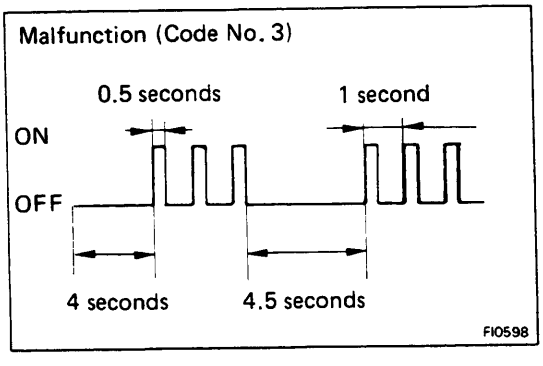

Diagnostic code (See page FI-25)

(a) Normal System Operation (code No.1) (no malfunction)
The light will blink once every 4.5 seconds.

(b) Malfunction Code Indication
The light will blink a number of times equal to the malfunction code indication every 4.5 seconds.
The diagnostic code series will be repeated as long as the check connector terminals (T and E_1) are shorted.

5. After the diagnosis check, remove the sub-wire.

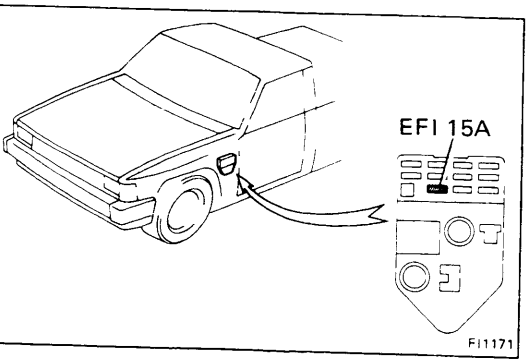

CANCELLING OUT DIAGNOSTIC CODE

1. After repair of the trouble area, the diagnostic code retained in memory by the ECU must be cancelled out by removing the fuse EFI (15A) for 30 seconds or more, depending on ambient temperature (the lower the temperature, the longer the fuse must be left out) with the ignition switch off.

NOTE:

- Cancellation can also be done by removing the battery negative (—) terminal, but in this case other memory systems (radio ETR, etc.)will also be cancelled out.
- If the diagnostic code is not cancelled out, it will be retained by the ECU and appear along with a new code in event of future trouble.
- If it is necessary to work on engine components requiring removal of the battery terminal, a check must first be made to see if a diagnostic code has been recorded.

2. After cancellation, road test the vehicle, if necessary, confirm that a "normal" code (No. 1) is now read on the "CHECK ENGINE" warning light.

   If the same diagnostic code is still indicated, it indicates that the trouble area has not been repaired thoroughly.

DIAGNOSIS INDICATION

(1) Including "normal", the ECU is programmed with the following 13 (22R-E), 14 (22R-TE) diagnostic codes.

(2) When 2 or more codes are indicated, the lowest number (code) will appear first.

(3) All detected diagnostic codes, except 11 and 13, will be retained in memory be the ECU from the time of detection until cancelled out.

(4) Once the malfunction is cleared, the "CHECK ENGINE" warning light on the instrument panel will go out but the diagnostic code(s) remain stored in ECU memory (except for code 11 and 13).

DIAGNOSIS CODES

Code	Number of blinks "CHECK ENGINE"	System	Diagnosis	Trouble area	Page
1	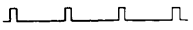	Normal	This appears when none of other codes (2 thru 13) are identified.		
2	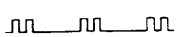	Air flow meter signal	• Open circuit in Vc, or Vs – E_2 short circuited. • Open circuit in E_2, or Vc – Vs short circuited.	1. Air flow meter circuit 2. Air flow meter 3. ECU	FI-56 FI-56 FI-73
3		Ignition signal	No signal from IGF four times in succession	1. Igniter circuit (+B, IGT, IGF) 2. Igniter 3. ECU	FI-73
4	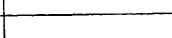	Water thermo sensor signal	Open or short circuit in water thermo sensor signal	1. Water thermo sensor circuit 2. Water thermo sensor 3. ECU	FI-68 FI-68 FI-73
5		Ox sensor signal	Sufficiented feed back condition but not changed Ox sensor signal	1. Ox sensor circuit 2. Ox sensor 3. ECU	FI-69 FI-69 FI-73
6		RPM signal (crank angle pulse)	No Ne signal to ECU within cranking, or Ne value being over 1,000 rpm in spite of no Ne signal to ECU	1. Igniter circuit 2. Igniter 3. Distributor 4. ECU	FI-73
7		Throttle position sensor signal	Open or short circuit in throttle position sensor signal	1. Throttle position sensor circuit 2. Throttle position sensor 3. ECU	FI-59 FI-59 FI-73
8	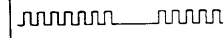	Intake air thermo sensor signal	Open or short circuit in intake air thermo sensor signal	1. Intake air thermo sensor circuit 2. Intake air thermo sensor 3. ECU	FI-73
10		Starter signal	No STA signal to ECU when vehicle speed 0 km/h and engine is running over 800 rpm	1. Speed sensor circuit 2. Main relay circuit 3. IG switch circuit (Starter) 4. IG switch 5. ECU	FI-64 FI-73
11		Switch signal	Short circuit in terminal T when air conditioner switch ON or IDL point OFF	1. Air conditioner switch 2. Throttle position sensor circuit 3. Throttle position sensor 4. ECU	FI-59 FI-59 FI-73
12		Knock control sensor signal	Knock control sensor signal is not reached judgement level in succession	1. Knock control sensor circuit 2. Knock control sensor 3. ECU	
13		Knock control CPU (ECU)	Knock CPU faulty	Knock control CPU (ECU)	

INSPECTION OF DIAGNOSIS CIRCUIT

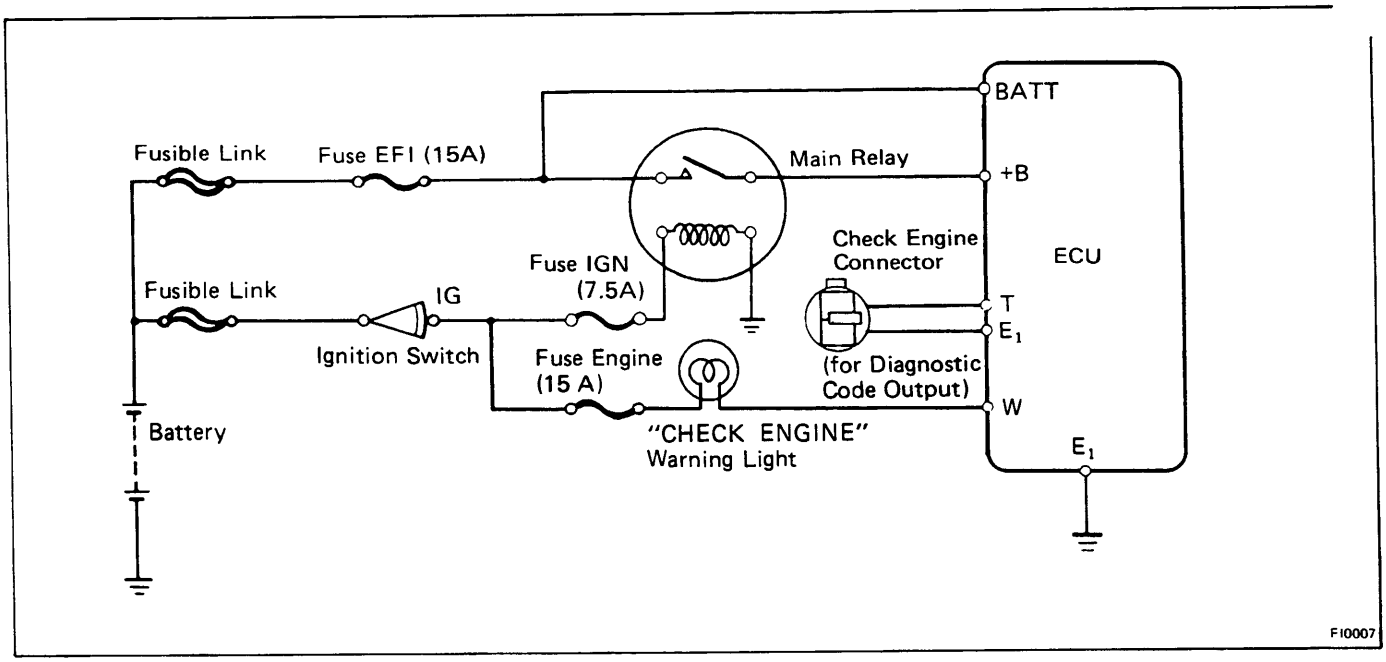

1. Does CHECK ENG. light come on when ignition switch is at ON?
   - YES → System Normal
   - NO → Does CHECK ENG. light come on when ECU terminal W is grounded to the body ?
     - YES → Check wiring between ECU terminal E_1 and body ground.
       - OK → Try another ECU.
       - BAD → Repair or replace
     - NO → Check bulb, fuse and wiring between ECU and ignition switch.
       - BAD → Repair or replace

2. Does CHECK ENG. light go OFF when engine is started?
   - YES → System Normal
   - NO → Check wiring between ECU and CHECK ENG. light.
     - BAD → Repair
     - OK → Is there diagnosis code output when CHECK ENG. connector T-E_1 is short circuited?
       - NO → Try another ECU.
       - YES → Does CHECK ENG. light go out after repair according to malfunction code?
         - NO → Further repair required.
         - YES → System OK
           - NO → Cancel out diagnostic code.

TROUBLESHOOTING WITH VOLT/OHMMETER

PREPARATION FOR TROUBLESHOOTING

1. **Remove the glove box.**
2. **Remove the ECU with the wire harness.**

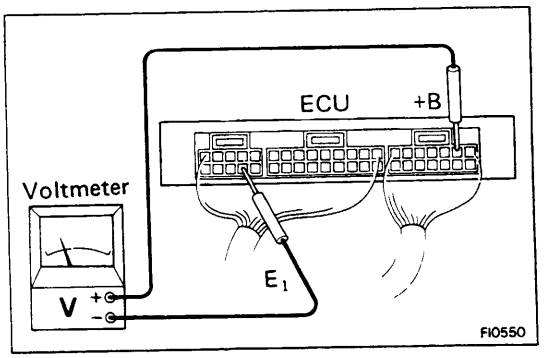

EFI SYSTEM CHECK PROCEDURE

NOTE:
1. The EFI circuit can be checked by measuring the resistance and voltage at the wiring connectors of the ECU.
2. Perform all voltage measurement with the connectors connected.
3. Verify that the battery voltage is 11 V or above when the ignition switch is ON.

Using a voltmeter with high impedance (10 kΩ/V minimum) measure the voltage at each terminal of the wiring connector.

NOTE: If there is any problems, see TROUBLESHOOTING FOR EFI ELECTRONIC CIRCUIT WITH VOLT/OHMMETER.

Connectors of ECU

Symbol	Terminal Name	Symbol	Terminal Name
$+B_1$	MAIN RELAY	+B	MAIN RELAY
BATT	BATTERY +B	B/K	BRAKE SWITCH
THA	AIR THERMO SENSOR	SPD	SPEED SENSOR
Vs	AIR FLOW METER	4WD	4WD SWITCH
Vc	AIR FLOW METER	E_{21}	SENSOR EARTH
Ne	ENGINE REVOLUTION SENSOR	THW	WATER THERMO SENSOR
KNK	KNOCK SENSOR	VTA	THROTTLE
IGf	IGNITER	Vcc	THROTTLE SWITCH +B
IDL	THROTTLE SWITCH	Ox	Ox SENSOR
T	CHECK CONNECTOR	E_2	SENSOR EARTH
W	WARNING LIGHT	TSW	WATER THERMO SWITCH
Fpu	FUEL PRESSURE UP SWITCH	ACV	A/C IDLE UP
NSW	NEUTRAL START SWITCH	E_1	ENGINE EARTH
VF	CHECK CONNECTOR	IGt	IGNITER
STA	STARTER SWITCH	No. 20	INJECTOR
No. 10	INJECTOR	E_{02}	ENGINE GROUND
E_{01}	ENGINE GROUND		

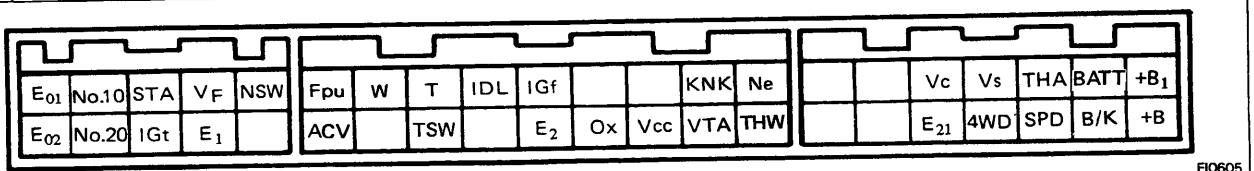

TROUBLESHOOTING FOR EFI ELECTRONIC CIRCUIT WITH VOLT/OHMMETER

NOTE: Because the following troubleshooting procedures are designed for inspection of each separate system, the actual troubleshooting procedure may vary somewhat. However, please refer to these procedures and perform actual troubleshooting, conforming to the inspection methods described.
For example, it is better to first make a simple check of the fuses, fusible links and connecting condition of the connectors before making your inspection according to the procedures listed.

LOCATION OF FUSE AND FUSIBLE LINK

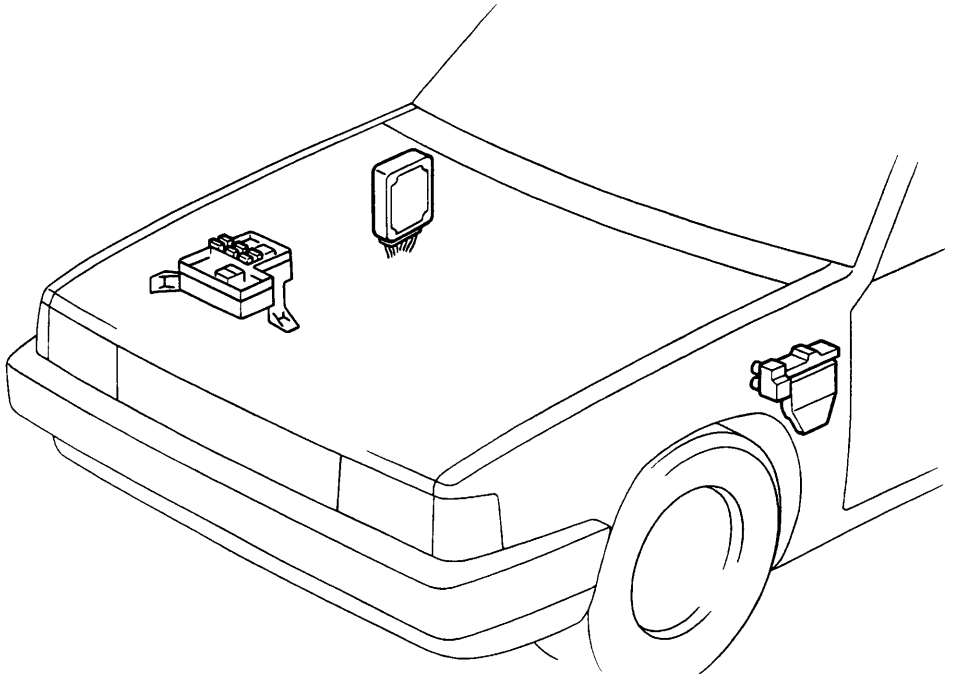

EFI Fuse (15A)

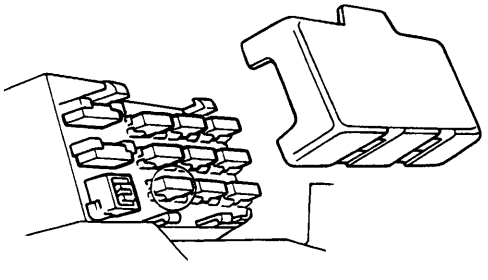

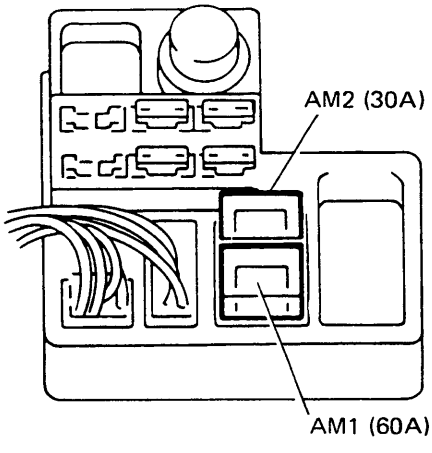

FI0006 FI0008

VOLTAGE AT ECU WIRING CONNECTORS

.	Terminals	Condition		STD Voltage	See page
1	+B – E_1	Ignition switch ON		10 – 14	FI-30
2	BATT – E_1	–		10 – 14	FI-31
3	IDL – E_2	Ignition switch ON	Throttle valve open	4 – 10	FI-32 FI-33
	VTA – E_2		Throttle valve fully closed	0.1 – 1.0	
			Throttle valve fully open	4 – 5	
	Vcc – E_2		–	4 – 6	
4	IGt – E_1	Idling		0.7 – 1.0	FI-34
5	STA – E_1	Ignition switch ST position		6 – 12	FI-35
6	No. 10 – E_1 No. 20 – E_1	Ignition switch ON		9 – 14	FI-36
7	W – E_1	No trouble (CHECK ENGINE light off) and engine running		8 – 14	FI-37
8	Vc – E_2	Ignition switch ON	–	4 – 9	FI-38
	Vs – E_2		Measuring plate fully closed	0.5 – 2.5	
			Measuring plate fully open	5 – 8	
		Idling		2.5 – 5.5	
9	THA – E_2	Ignition switch ON	Intake air temperature 20°C (68°F)	2 – 6	FI-39
10	THW – E_2	Ignition switch ON	Coolant temperature 80°C (176°F)	0.5 – 2.5	FI-40
11	B/K – E_1	Stop light switch ON		8 – 14	FI-41

No.	Terminals	Trouble	Condition	STD Voltage
1	+B — E_1	No voltage	IG S/W ON	10 — 14 V

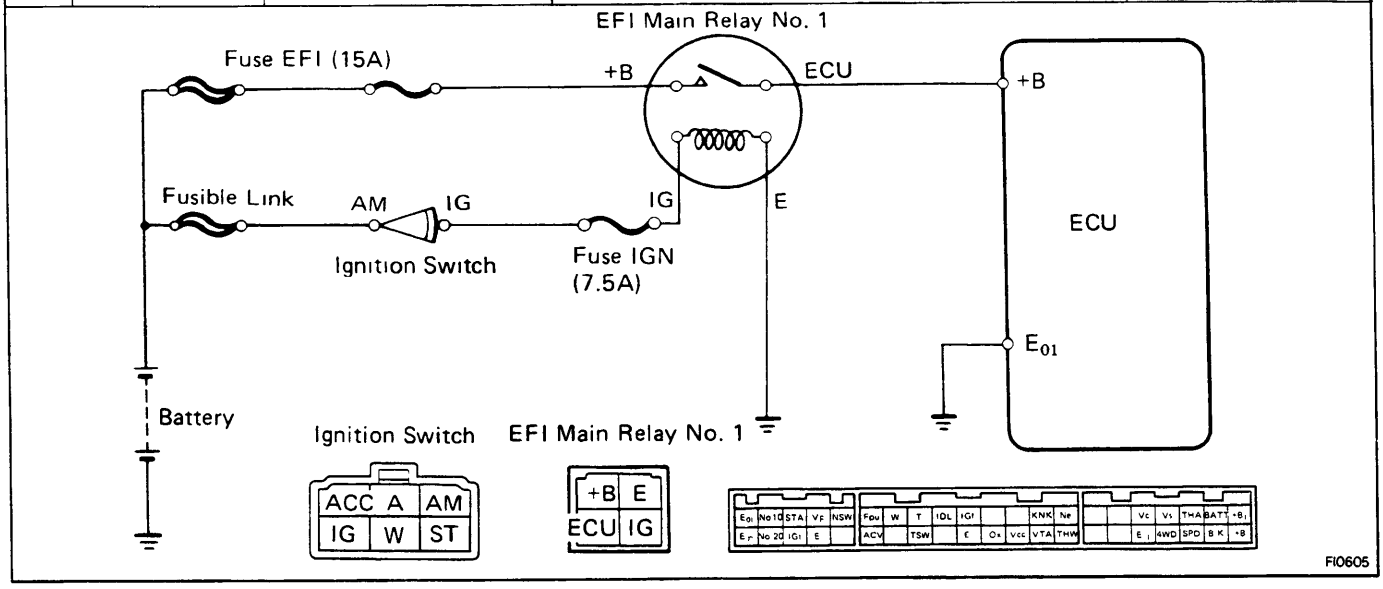

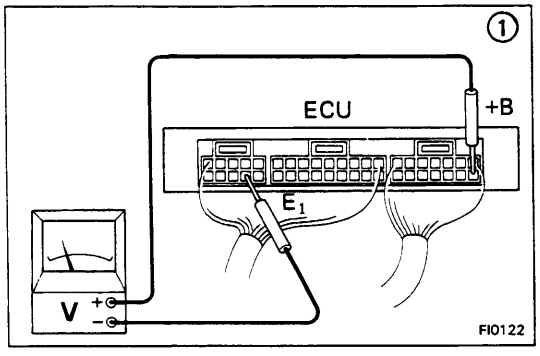

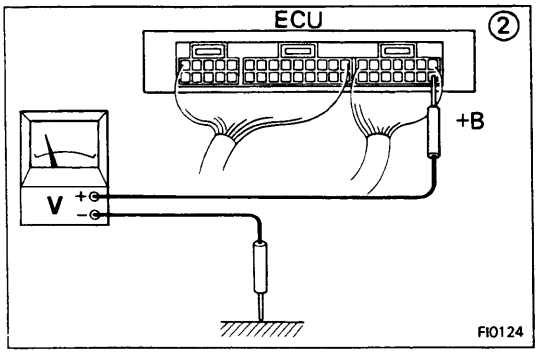

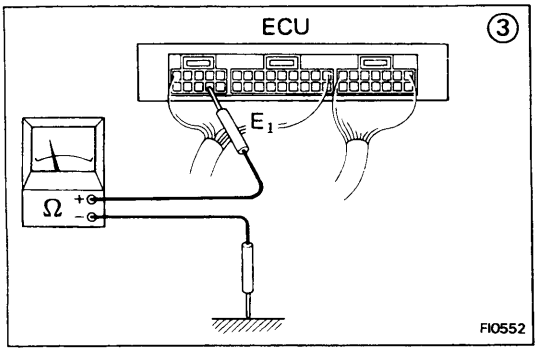

① No voltage between ECU terminals +B and E_1. **(IG S/W ON)**

② Check that there is voltage between ECU terminal +B and body ground. **(IG S/W ON)**

NO → ③ Check wiring between ECU terminal E_1 and body ground.
- OK → Try another ECU.
- BAD → Repair or replace

OK → Check fuse, fusible link and ignition switch.
- BAD → Repair or replace

OK → Check EFI main relay.
- BAD → Replace

OK → Check wiring between EFI main relay and battery.
- BAD → Repair or replace

No.	Terminals	Trouble	Condition	STD Voltage
-	BATT — E_1	No voltage	——	10 — 14 V

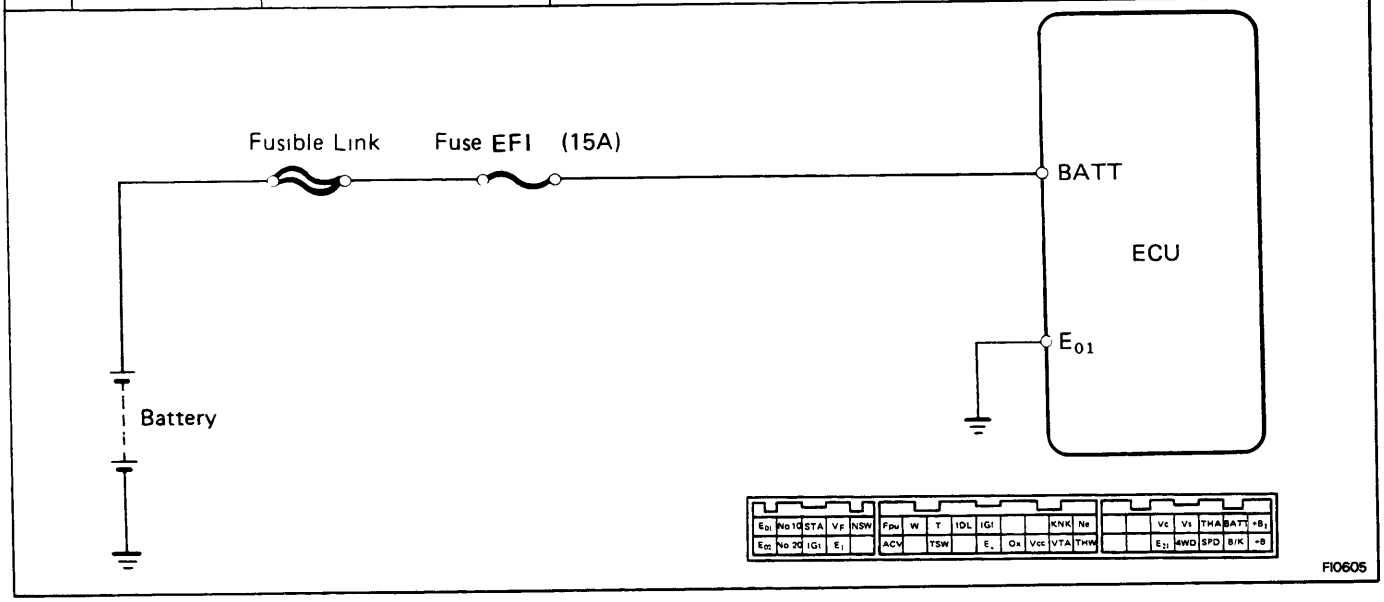

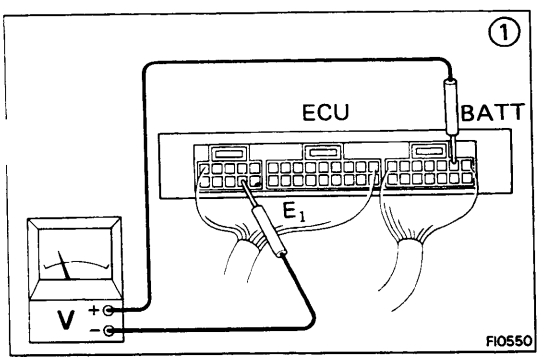

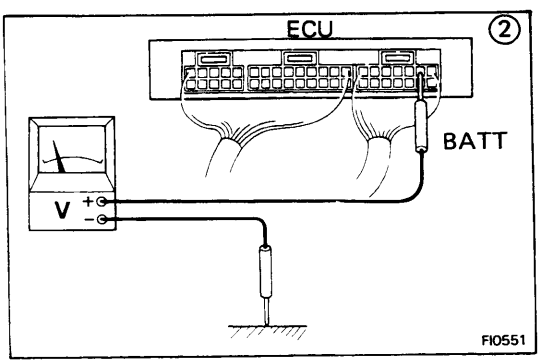

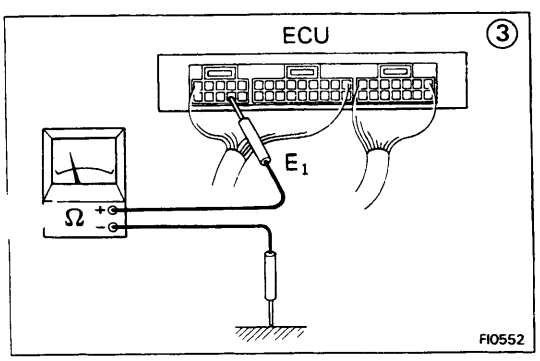

① No voltage between ECU terminals BATT and E_1.

② Check that there is voltage between ECU terminal BATT and body ground.

NO

OK

③ Check wiring between ECU terminal E_1 and body ground.

OK

Try another ECU.

BAD

Repair or replace

BAD

Check fuse and fusible link.

Replace

OK

Check wiring between fuse and ECU.

BAD

Repair or replace

No.	Terminals	Trouble	Condition		STD Voltage
3	IDL – E_2	No voltage	Ignition switch ON	Throttle valve open	4 – 10 V
	VTA – E_2			Throttle valve fully closed	0.1 – 1.0 V
				Throttle valve fully open	4 – 5 V
	Vcc – E_2			–	4 – 6 V

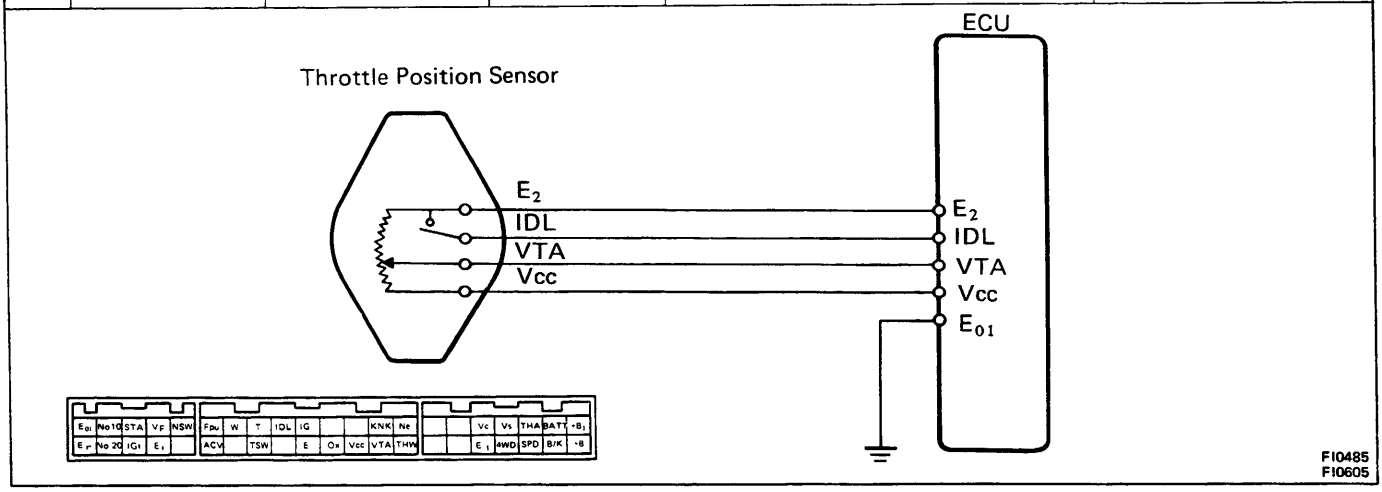

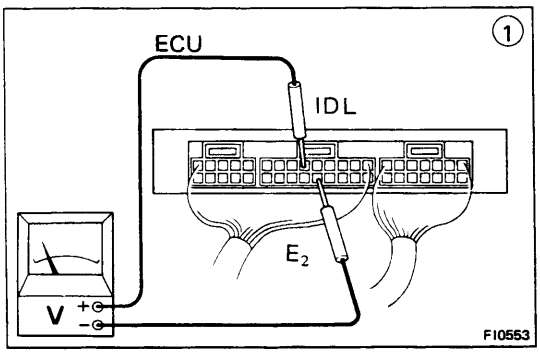

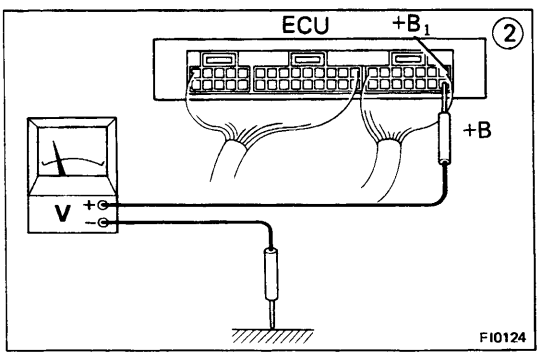

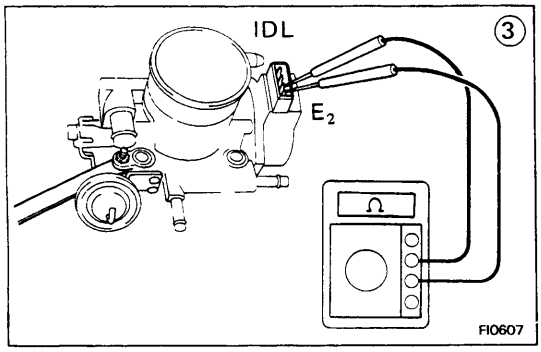

• IDL ↔ E_2

① There is no voltage between ECU terminals IDL and E_2. **(IG S/W ON)** (Throttle valve open)

② Check that there is voltage between ECU terminal $+B_1$ or +B and body ground. **(IG S/W ON)**

NO → OK

Check wiring between ECU terminal E_1 and body ground.

BAD → Replace or repair.

Refer to No. 1

BAD → Replace or repair.

OK

③ Check throttle position sensor.

BAD → Replace or repair throttle position sensor.

OK → Check wiring between ECU and throttle position sensor.

BAD → Replace or repair.

OK → Try another ECU.

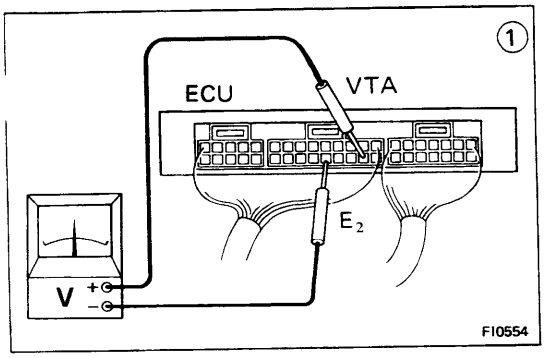

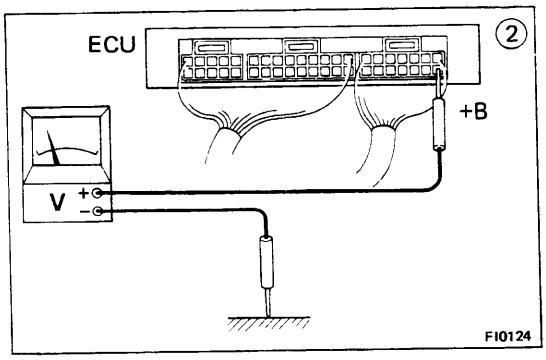

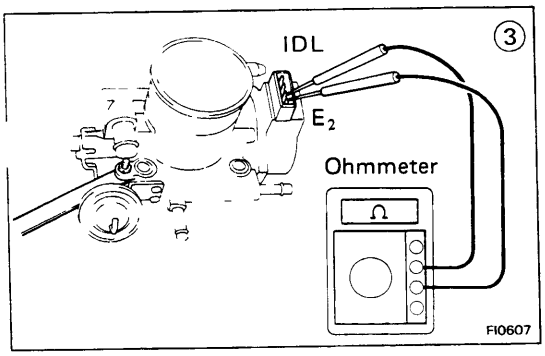

• VTA ↔ E_2

① There is no specified voltage at ECU terminals VTA and E_2. **(IG S/W ON)**

↓

② Check that there is voltage between ECU terminal $+B_1$ or $+B$ and body ground. **(IG S/W ON)**

NO → ↓

OK → Check wiring between ECU terminal E_1 and body ground.

BAD → Replace or repair.

↓

Refer to No. 1. — BAD → Repair or replace.

↓ OK

③ Check throttle position sensor. — BAD → Repair or replace.

↓ OK

Check wiring between ECU and throttle position sensor. — BAD → Repair or replace.

↓ OK

Try another ECU.

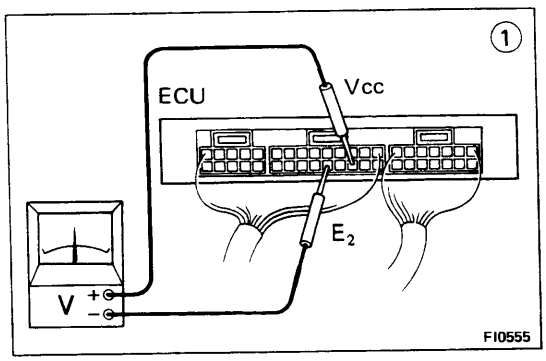

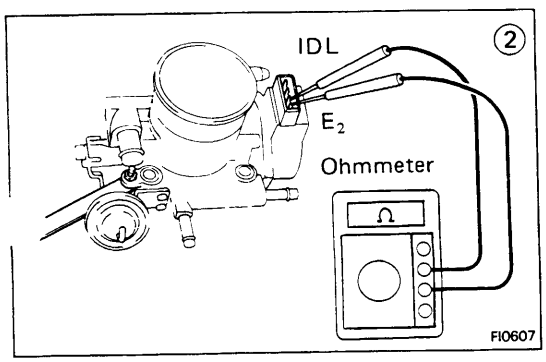

• Vcc ↔ E_2

① There is no voltage between ECU terminals Vcc and E_2. **(IG S/W ON)**

↓

Check that there is voltage between ECU terminal $+B_1$ or $+B$ and body ground. **(IG S/W ON)**

OK → ↓

NO → Refer to No. 1.

② Check throttle position sensor.

BAD → Repair or replace.

OK → Check wiring between ECU and throttle position sensor.

OK → Try another ECU.

BAD → Repair or replace wiring.

No.	Terminals	Trouble	Condition	STD Voltage
4	IGt – E_1	No voltage	Idling	0.7 – 1.0 V

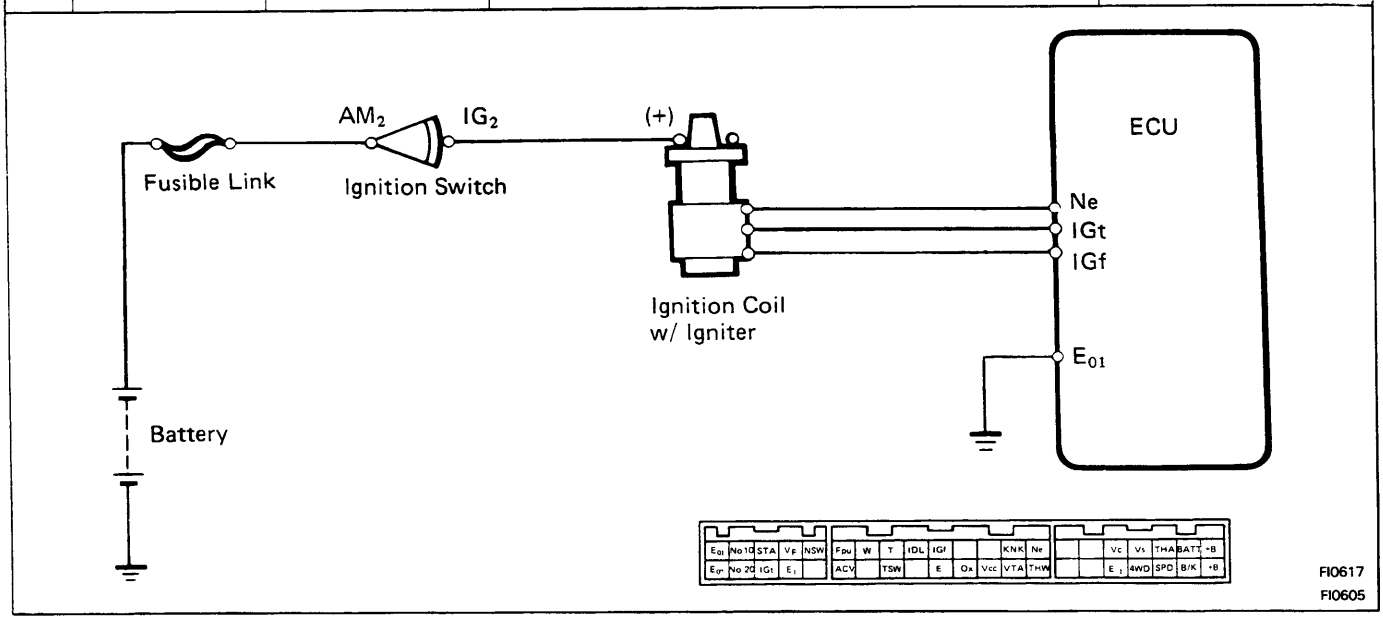

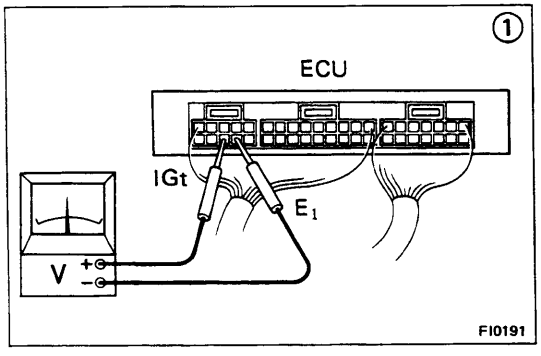

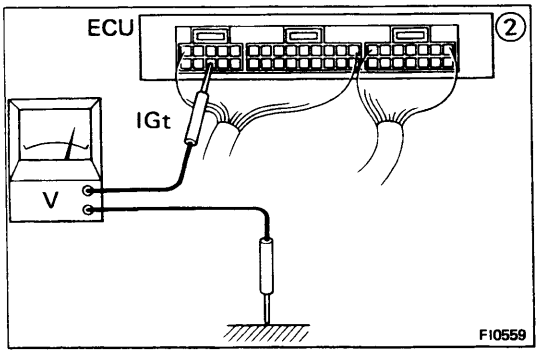

① There is no voltage between ECU terminals IGt and E_1. (Idling)

↓

② Check that there is voltage between ECU terminal IGt and body ground. (Idling)

↓ OK

Check wiring between ECU terminal E_1 and body ground.

↓ BAD

Repair or replace.

② → Refer to No. 1. → BAD → Repair or replace.

↓ OK

Check wiring between igniter and distributor. → BAD → Repair or replace.

↓ OK

Check distributor. → BAD → Replace.

↓ OK

Check wiring between ECU and igniter. → BAD → Repair or replace.

↓ OK

Check igniter. (See page IG-5) → BAD → Repair or replace.

↓ OK

Try another ECU.

No.	Terminals	Trouble	Condition	STD Voltage
	STA — E_1	No voltage	Ignition switch ST position	6 — 12 V

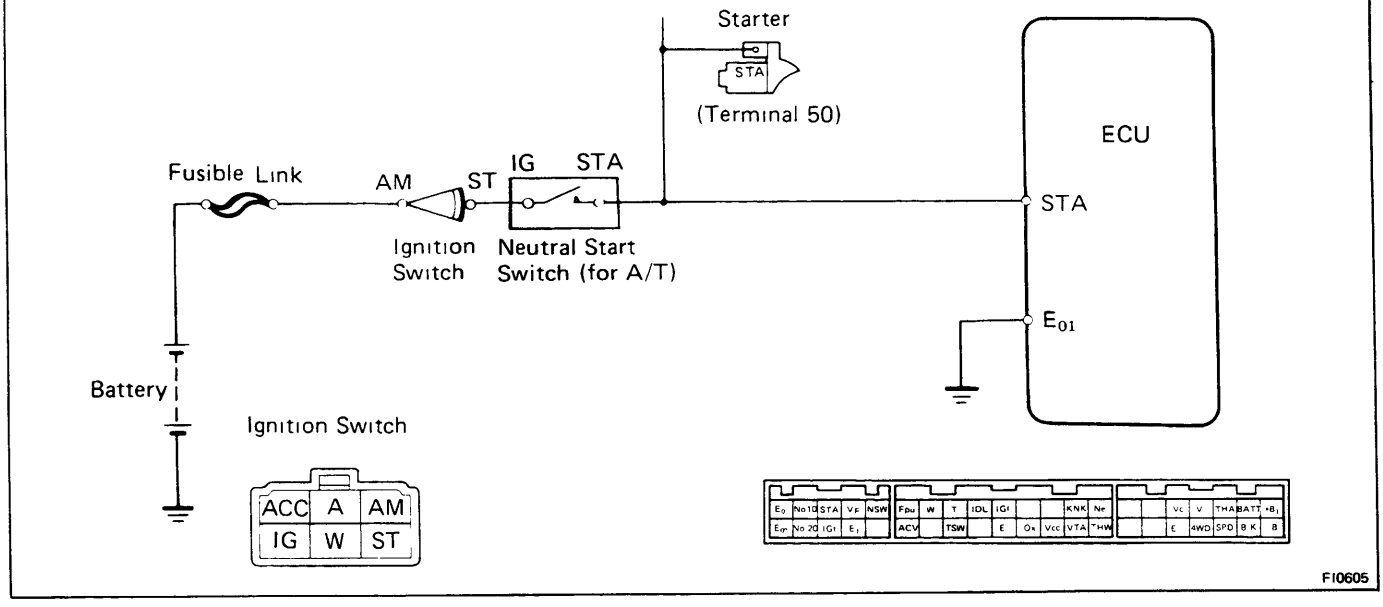

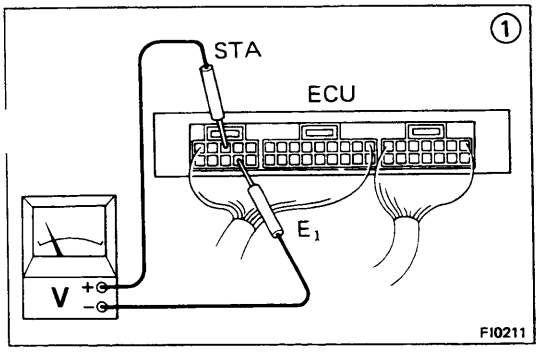

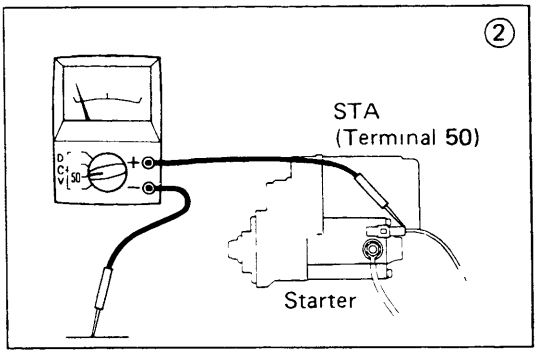

① No voltage between ECU terminals STA and E_1. **(IG S/W ST)**

Check starter operation.
- OK → Check wiring between ECU and ignition switch terminal ST.
  - OK → Check wiring between ECU terminal E_1 and body ground.
    - OK → Try another ECU.
    - BAD → Repair or replace
  - BAD → Repair or replace
- BAD → Check fusible link, battery, wiring and ignition switch.
  - BAD → Repair or replace
  - OK → ② Check that there is voltage at STA (50) terminal of starter. **(IG S/W ST)** **STD voltage: 6 — 12 V**
    - OK → Check starter. (See page ST-3)
    - NO → Check wiring between ignition switch ST terminal and starter STA (50) terminal.

No.	Terminals	Trouble	Condition	STD Voltage
6	No. 10 — E_1 No. 20 — E_1	No voltage	Ignition switch ON	9 — 14 V

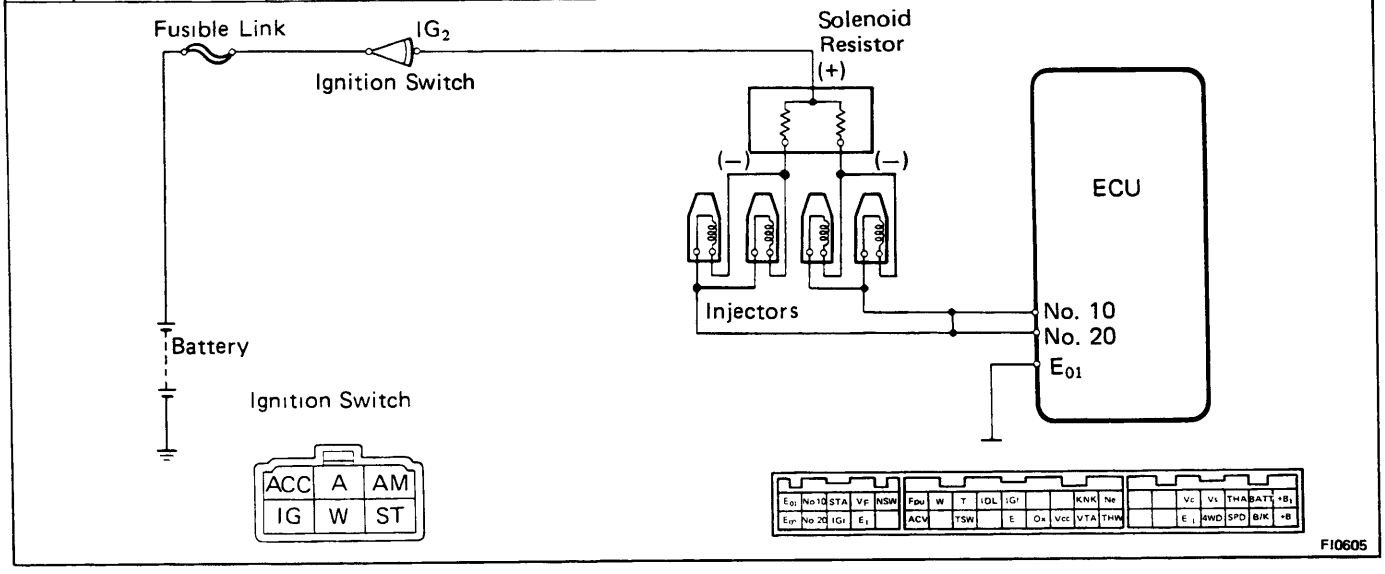

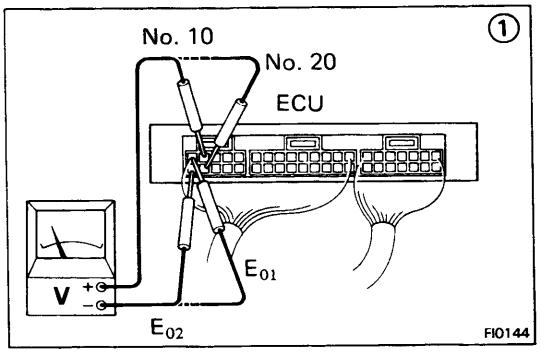

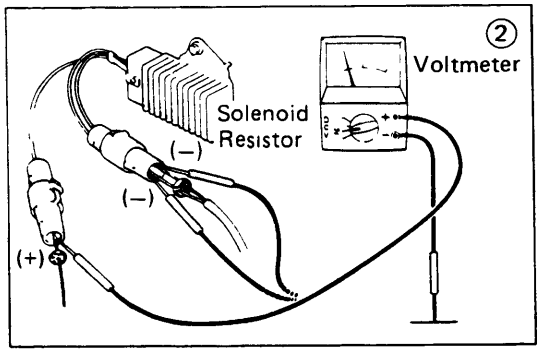

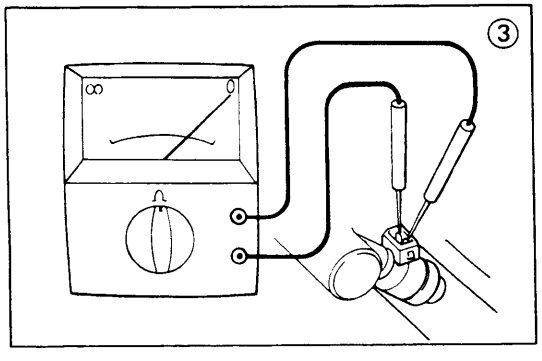

① No voltage between ECU terminals No. 10 and/or No. 20 and E_{01}. **(IG S/W ON)**

↓

② Check that there is specified voltage between resistor terminal (+) and body ground. **STD voltage: 9 — 14 V**

OK ↓ / NO →

Check fuse, fusible link and ignition switch. → BAD → Repair or replace

↓ OK

Check wiring between solenoid resistor and battery. → BAD → Repair or replace

↓

② Check that there is specified voltage between resistor terminal (−) and body ground. **STD voltage: 9 — 14 V**

OK ↓ / NO →

③ Check resistance of magnetic coil in each injector. **STD resistance: 1.5—3.0 Ω** → Replace resistor.

OK ↓ / BAD →

Check wiring between ECU and resistor. / Replace injector.

No.	Terminals	Trouble	Condition	STD Voltage
	W — E_1	No voltage	No trouble (CHECK ENGINE light off) and engine running	8 — 14 V

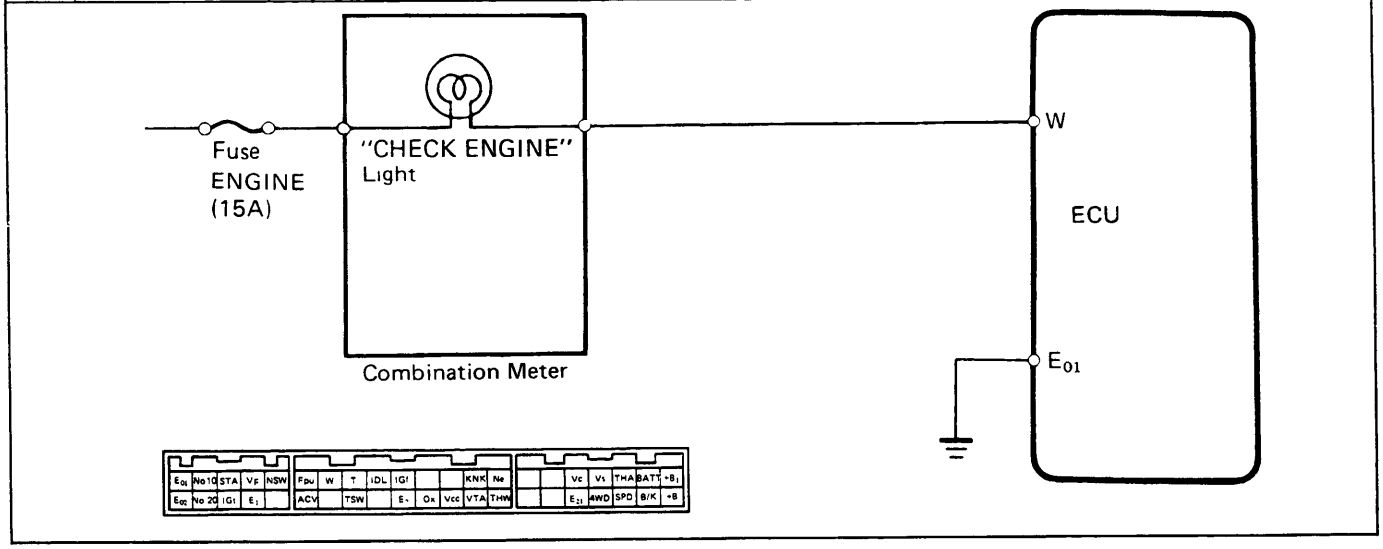

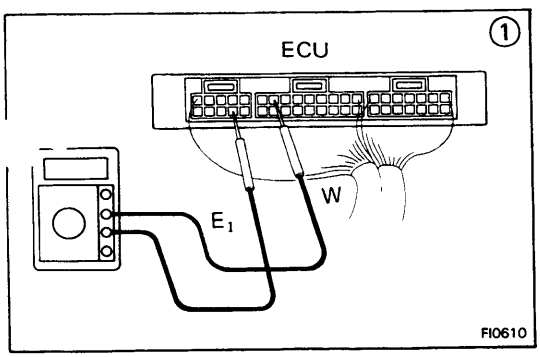

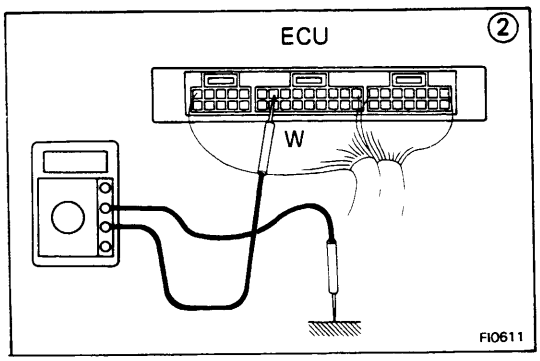

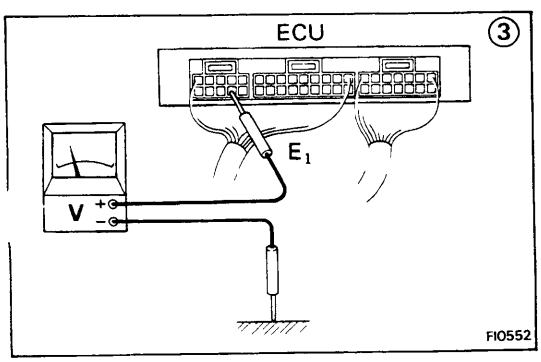

① No voltage between ECU terminal W and E_1. (Idling)

↓

② Check that there is voltage between ECU terminal W and body ground.

NO → ③ Check wiring between ECU terminal E_1 and body ground.
- OK → Try another ECU.
- BAD → Repair or replace

OK → Check ENGINE fuse (15A) and Check Engine light.
- BAD → Repair or replace

OK → Check wiring between ECU terminal W and fuse.
- BAD → Repair or replace

No.	Terminals	Trouble	Condition		STD Voltage
8	Vc — E2	No voltage	Ignition switch ON	—	4 — 9 V
	Vs — E2			Measuring plate fully closed	0.5 — 2.5 V
	Vs — E2			Measuring plate fully open	5 — 8 V
	Vs — E2		Idling	—	2.5 — 5.5 V

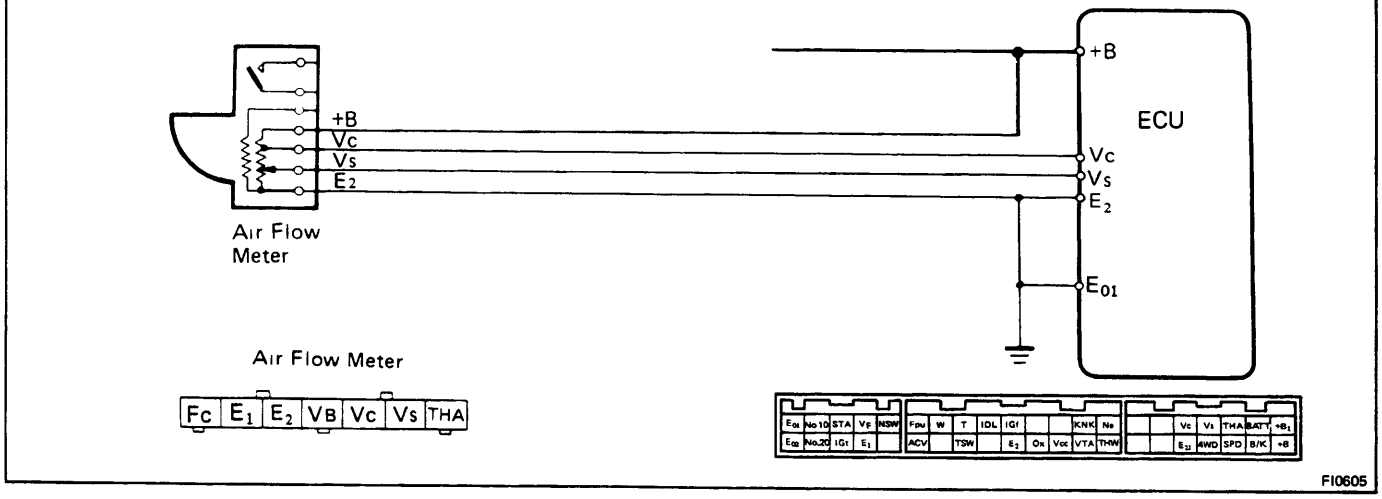

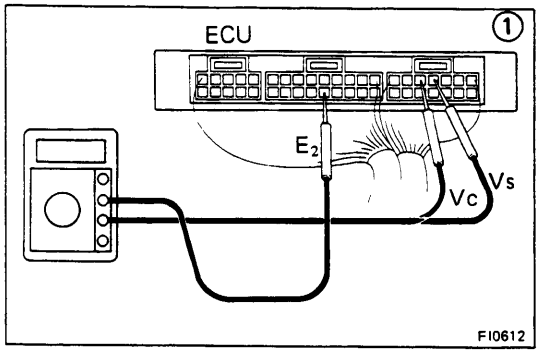

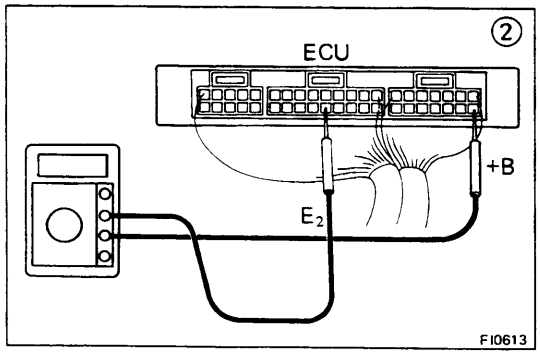

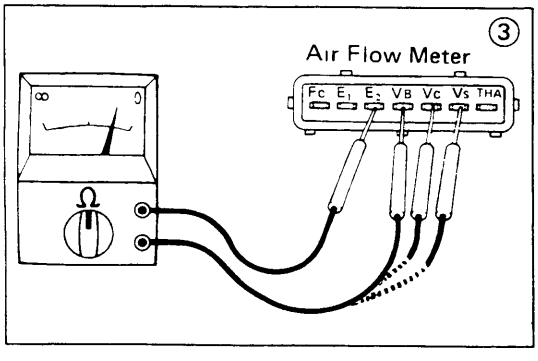

- **Vc — E2, Vs — E2**

① No specified voltage at ECU terminals Vc or Vs and E_2 **(IG S/W ON)**

② Check that there is voltage between ECU terminals +B and E_2. **(IG S/W ON)**

OK → ③ Check air flow meter.

NO → Refer to +B — E2 trouble section.

③ NO → Replace or repair air flow meter.

③ OK → Check wiring between ECU and air flow meter.

OK → Try another ECU.

NO → Replace or repair wiring.

No.	Terminals	Trouble	Condition		STD Voltage
③	THA — E_2	No voltage	Ignition switch ON	Intake air temperature 20°C (68°F)	2 — 6 V

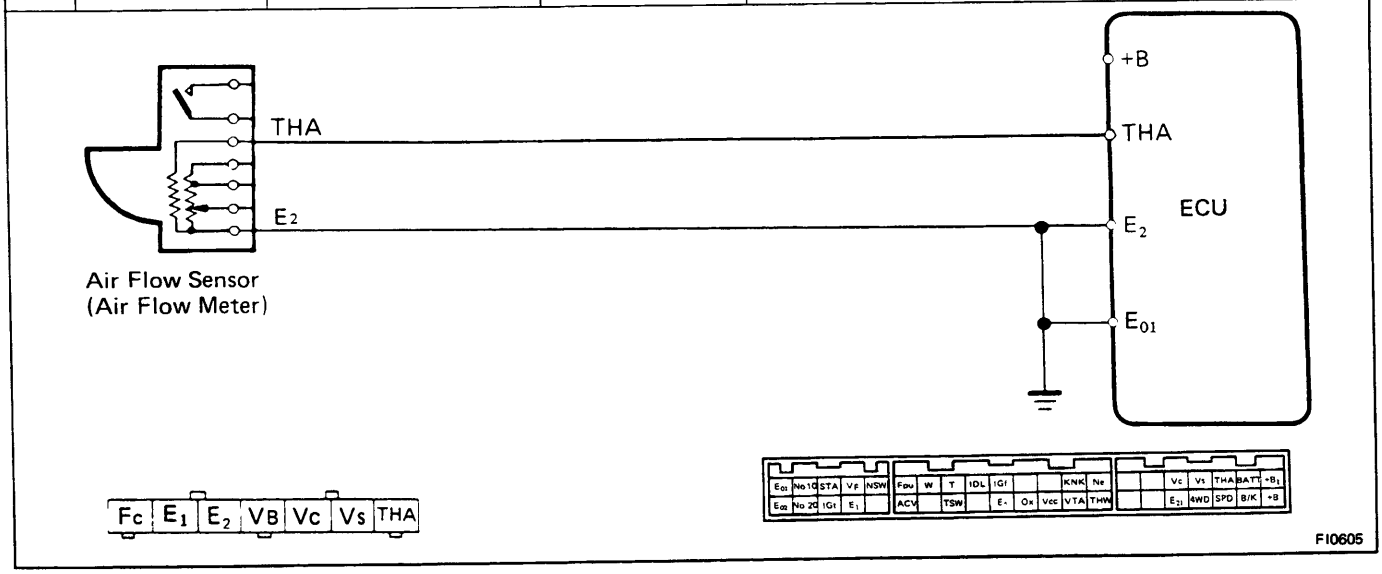

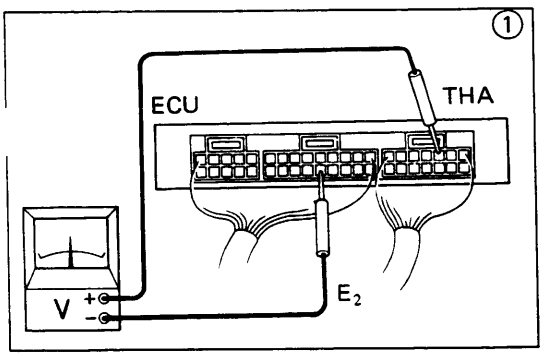

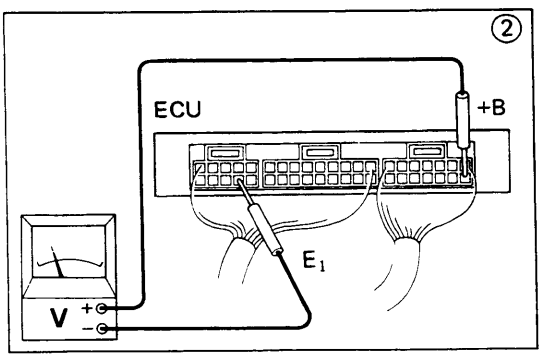

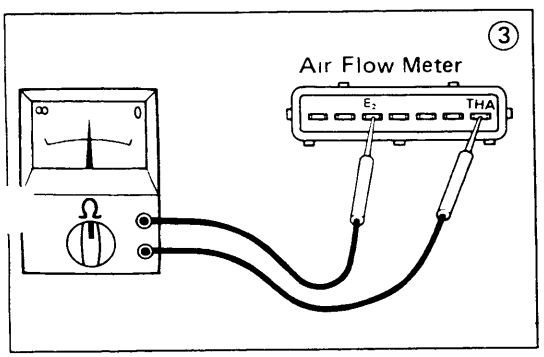

① No voltage between ECU terminals THA and E_2. **(IG S/W ON)**

② Check that there is voltage between ECU terminal +B and body ground. **(IG S/W ON)**

OK → ③ Check air thermo sensor.

NO → Refer to section 1.

③ Check air thermo sensor.

BAD → Replace air flow meter.

OK → Check wiring between ECU and air thermo sensor.

OK → Try another ECU.

BAD → Repair or replace wiring.

No.	Terminals	Trouble	Condition		STD Voltage
10	THW – E_2	No voltage	Ignition switch ON	Coolant temperature 80°C (176°F)	0.5 – 2.5 V

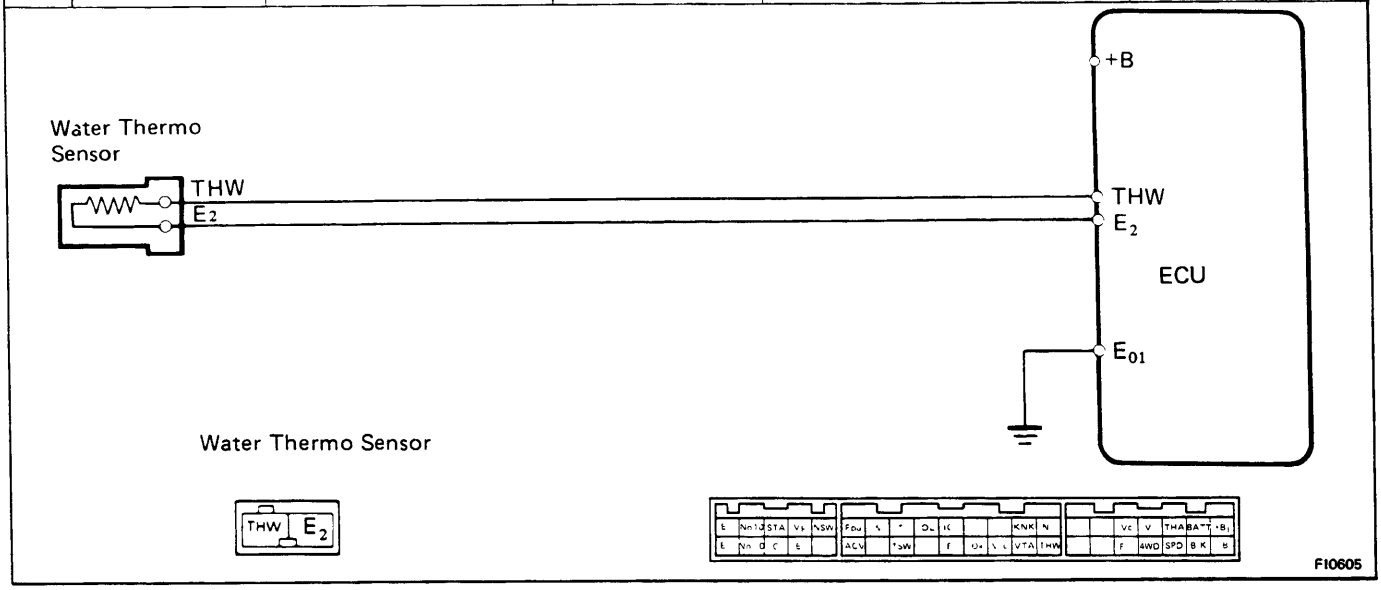

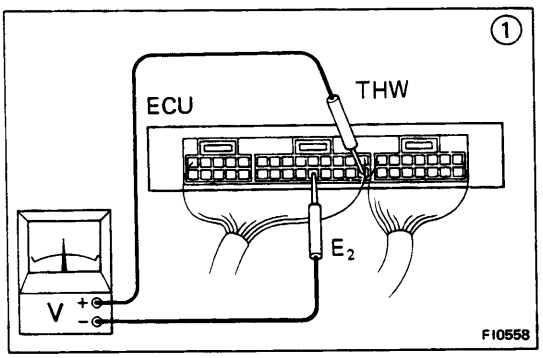

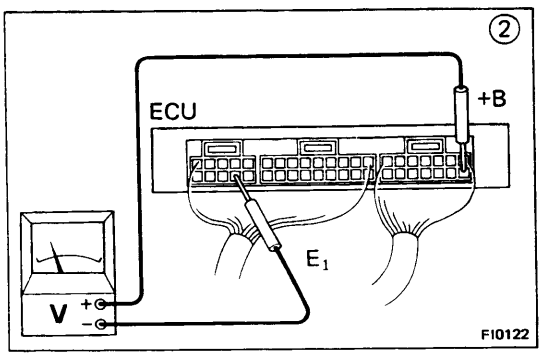

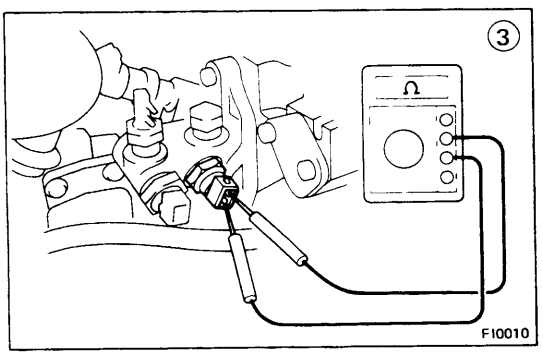

① No voltage between ECU terminals THW and E_2. **(IG S/W ON)**

↓

② Check that there is voltage between ECU terminal +B and body ground. **(IG S/W ON)**

OK → ③ Check water thermo sensor.

NO → Refer to section 1.

③ Check water thermo sensor.

BAD → Replace water thermo sensor.

OK → Check wiring between ECU and water thermo sensor.

OK → Try another ECU.

BAD → Repair or replace wiring

No.	Terminals	Trouble	Condition	STD Voltage
1	B/K – E_1	No voltage	Stop light switch ON	8 – 14 V

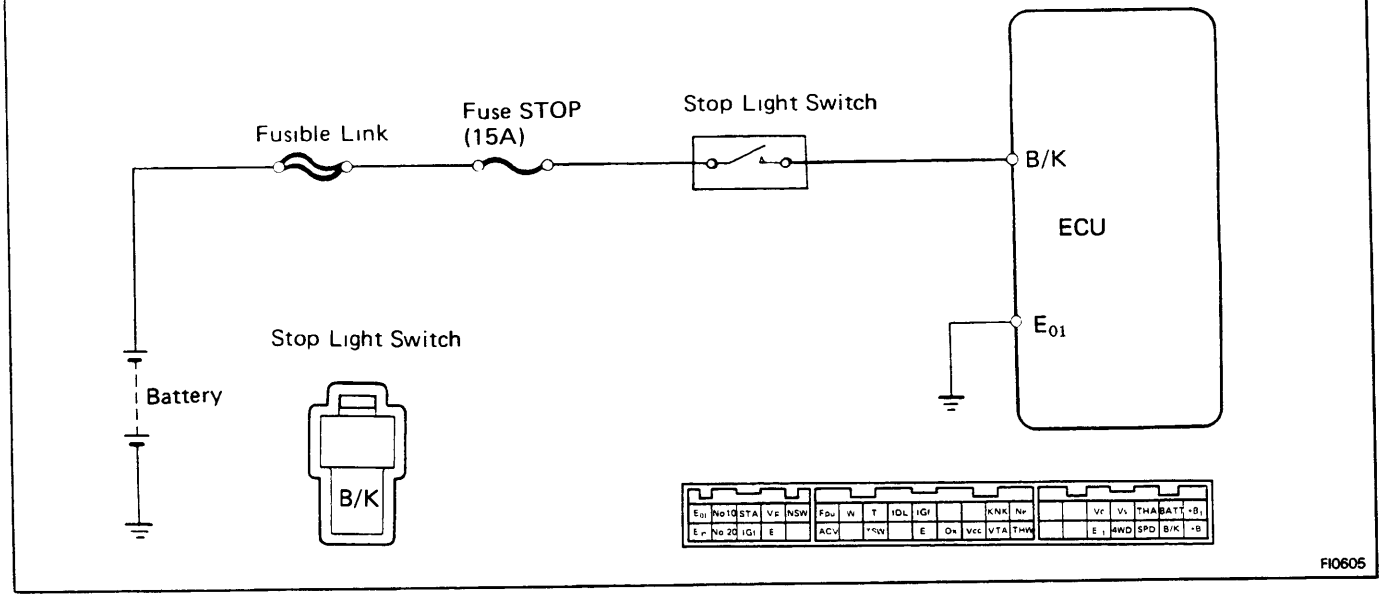

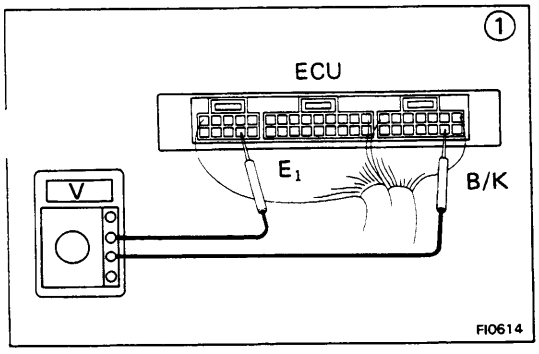

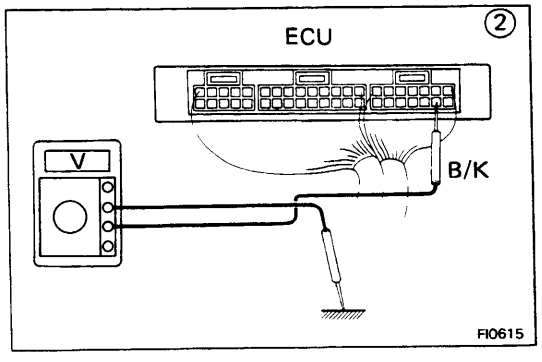

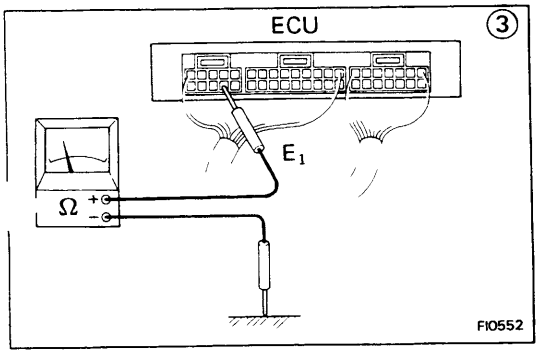

① No voltage between ECU terminals B/K and E_1.

② Check that there is voltage between ECU terminal B/K and body ground when the brake pedal is depressed.

NO

OK

③ Check wiring between ECU E_1 and body ground.

OK

Try another ECU.

BAD

Repair or replace

BAD

Repair or replace

Check STOP fuse (15A) and stop light switch.

OK

BAD

Repair or replace

Check wiring between ECU terminal B/K and battery.

FUEL SYSTEM
Fuel Pump

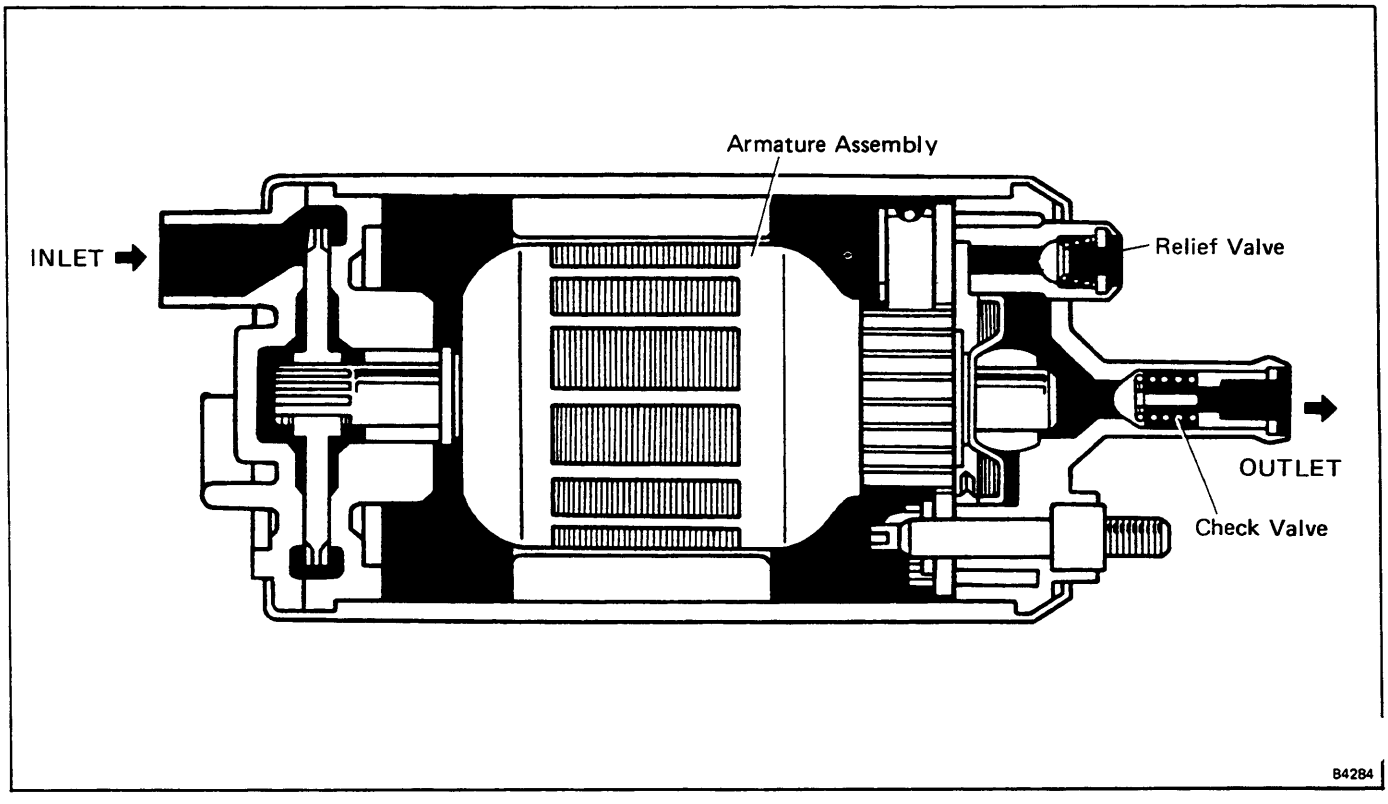

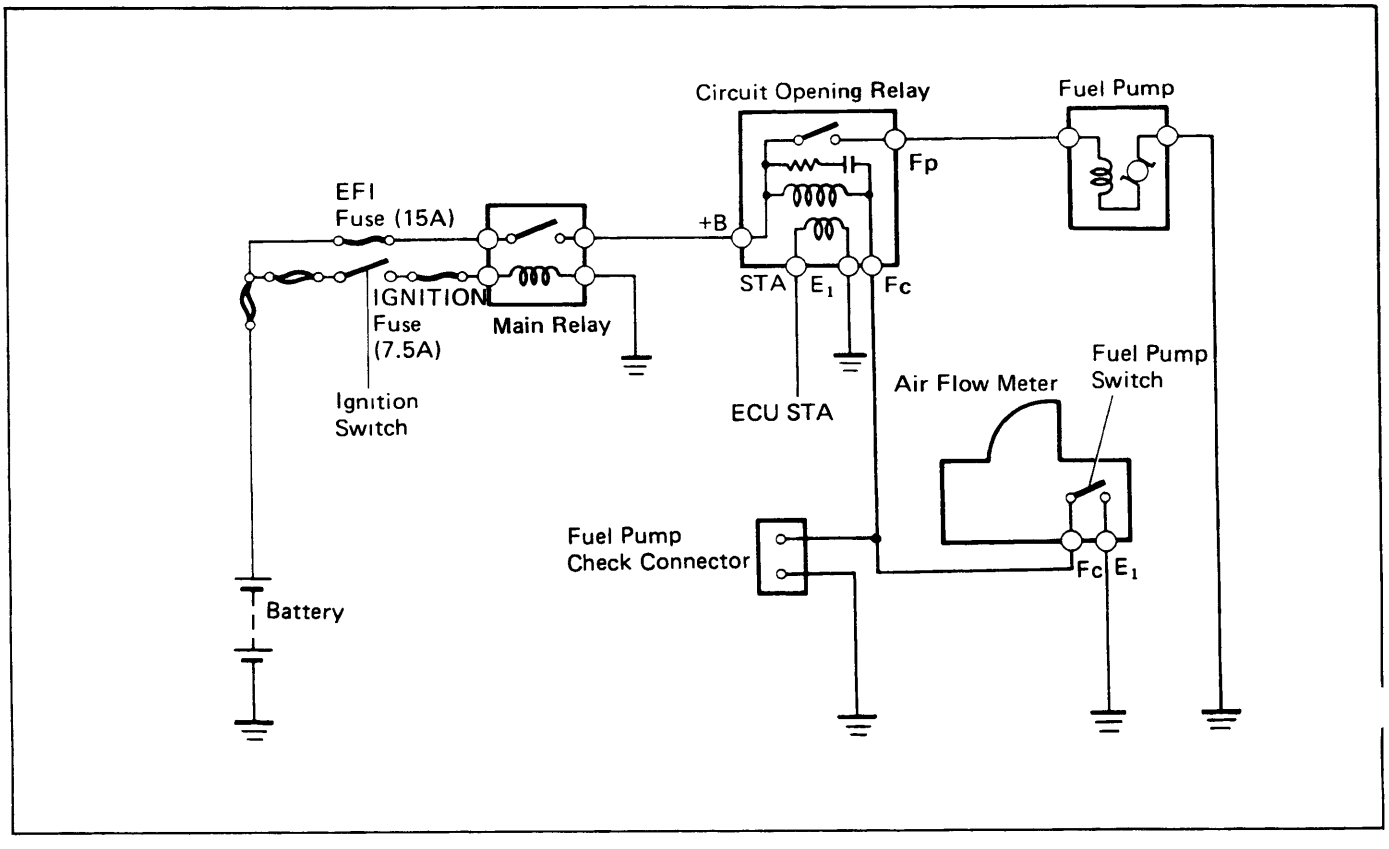

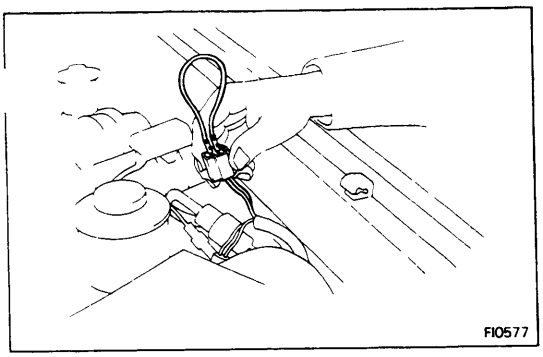

ON-VEHICLE INSPECTION

1. CHECK FUEL PUMP OPERATION

(a) Turn on the ignition switch.

NOTE: Do not start the engine.

(b) Short the terminals Fp and +B of the check connector (diagnosis).

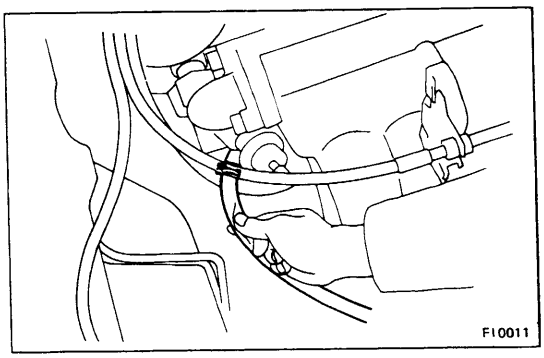

(c) Check that there is a pressure in the hose to the cold start injector.

NOTE: At this time, you will hear fuel return noise from the pressure regulator.

(d) Remove service wire and install the rubber cap to the check connector.

(e) Turn off the ignition switch.

If there is no pressure, check the following parts.

- Fusible link
- Fuse (EFI 15A, IGN. 7.5A)
- Circuit opening relay
- Fuel pump
- Wiring connections

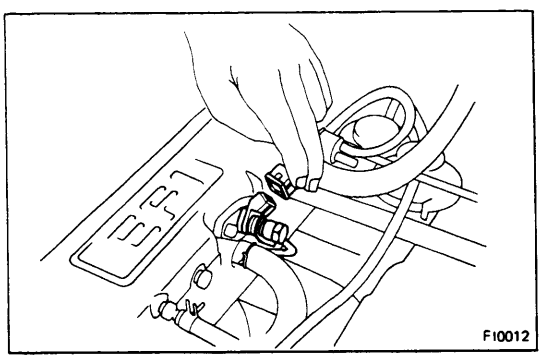

2. CHECK FUEL PRESSURE

(a) Check the battery voltage above 12 volts.

(b) Disonnect the cable from the negative terminal of the battery.

(c) Disconnect the wiring connector from the cold start injector.

(d) Put a suitable container or shop towel under rear end of the delivery pipe.

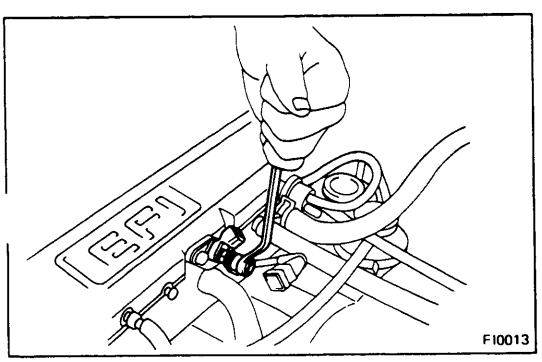

(e) Slowly loosen the union bolt of the cold start injector hose and remove the bolt and two gaskets from the delivery pipe.

(f) Drain the fuel from the delivery pipe.

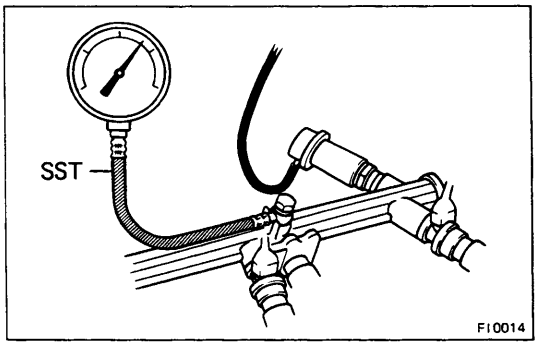

(g) Install a gasket, SST, another gasket and union bolt to the delivery pipe as shown in the figure.

SST 09268-45011

(h) Wipe off any splattered gasoline.

(i) Reconnect the battery cable.

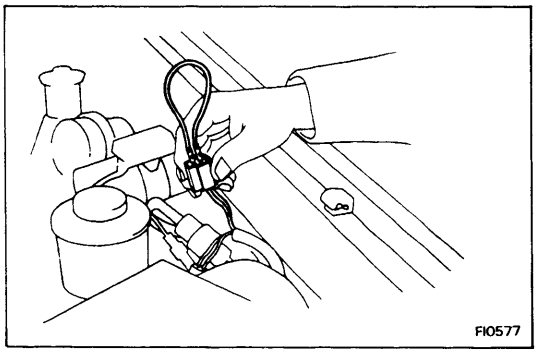

(j) Short both terminals of the fuel pump check connector with a wire.

(k) Turn on the ignition switch.

(l) Measure the fuel pressure.

Fuel pressure: 2.3 — 2.7 kg/cm² (33 — 38 psi, 226 — 265 kPa)

If high pressure, replace the pressure regulator.
If low pressure, check the following parts.

- Fuel hoses and connection
- Fuel pump
- Fuel filter
- Pressure regulator

(m) Remove the service wire from the service connector

(n) Start the engine.

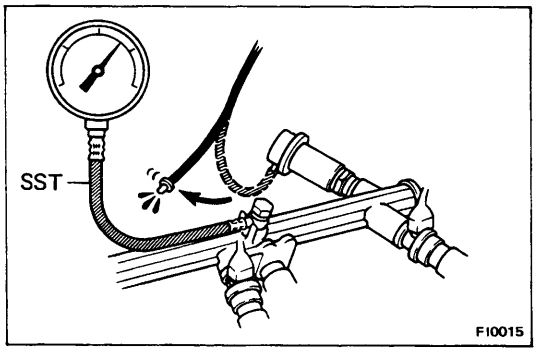

(o) Disconnect the vacuum sensing hose from the pressure regulator and plug it off.

(p) Measure the fuel pressure at idling.

Fuel pressure: 2.3 — 2.7 kg/cm² (33 — 38 psi, 226 — 265 kPa)

(q) Reconnect the vacuum sensing hose to the pressure regulator.

(r) Measure the fuel pressure at idling.

Fuel pressure: 1.9 — 2.2 kg/cm² (27 — 31 psi, 186 — 216 kPa)

If not pressure, check the vacuum sensing hose and pressure regulator.

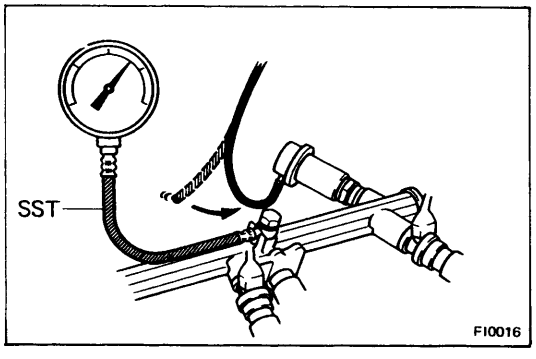

(s) Stop the engine. Check that the fuel pressure remains above 1.5 kg/cm² (21 psi, 147 kPa) for 5 minutes after the engine is turned off.

If not within specification, check the fuel pump, pressure regulator and/or injectors.

(t) After checking fuel pressure, disconnect the battery ground cable and carefully remove the SST to prevent gasoline from splashing.

(u) Using new gaskets, reconnect the cold start injector hose to the delivery pipe.

(v) Connect the wiring connector to the cold start injector.

(w) Check for fuel leakage.

REMOVAL OF FUEL PUMP

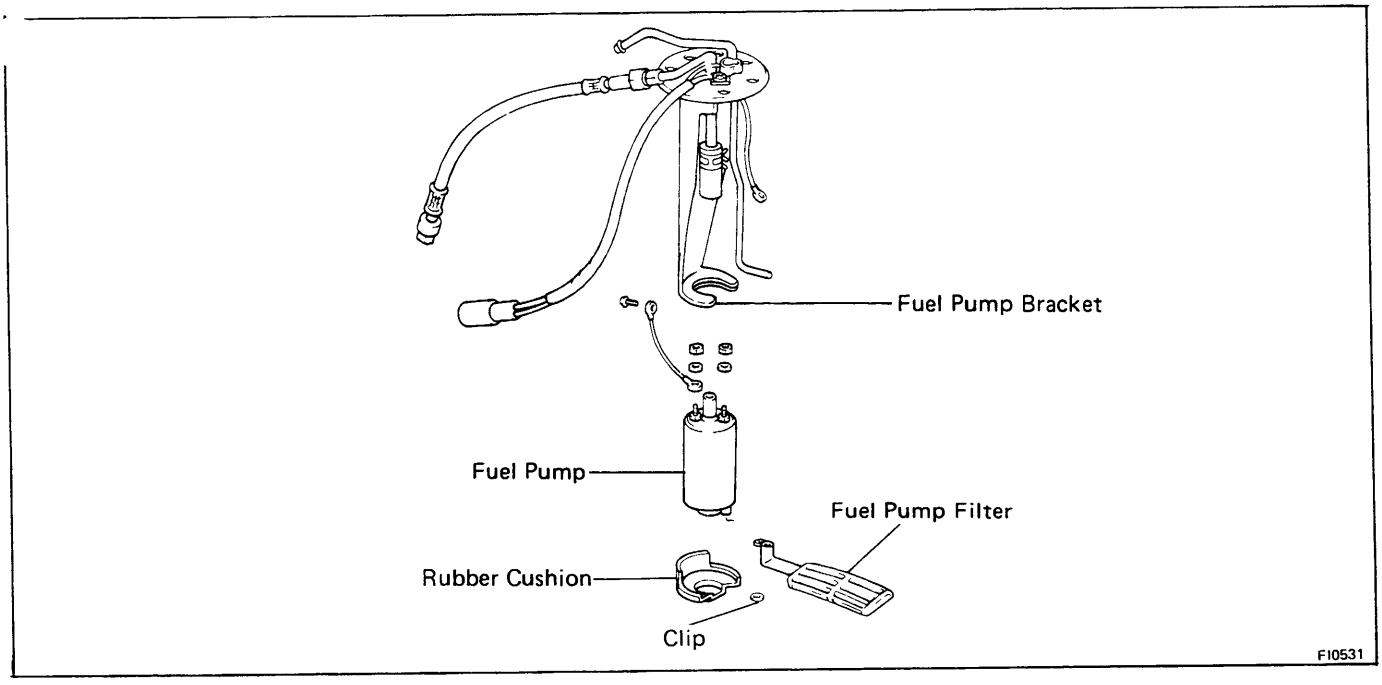

1. DRAIN FUEL FROM FUEL TANK

   WARNING: **Avoid smoking and open flame when working on the fuel pump.**

2. REMOVE FUEL TANK

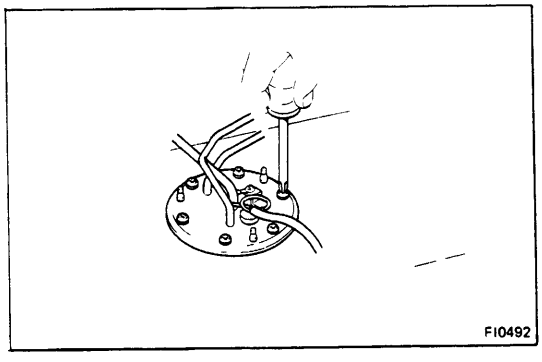

3. REMOVE FUEL PUMP BRACKET FROM FUEL TANK
   (a) Remove the seven bolts.
   (b) Pull out the fuel pump bracket.

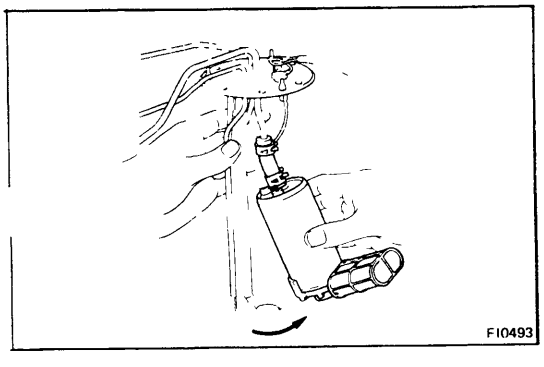

4. REMOVE FUEL PUMP FROM FUEL PUMP BRACKET
   (a) Remove the two nuts and disconnect the wires from the fuel pump.
   (b) Pull off the bracket from the lower side of the fuel pump.
   (c) Remove the fuel pump from the fuel hose.

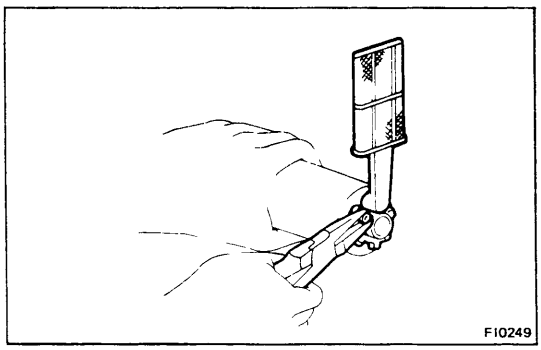

5. REMOVE FUEL PUMP FILTER FROM FUEL PUMP
   (a) Remove the rubber cushion.
   (b) Remove the clip and pull out the filter.

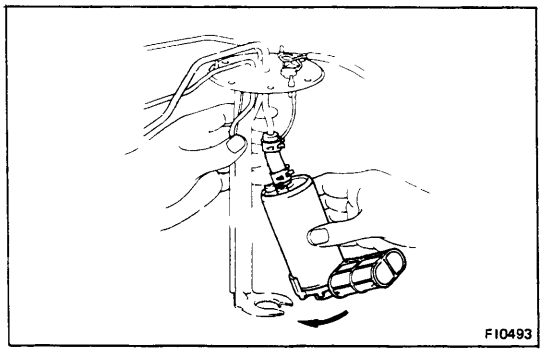

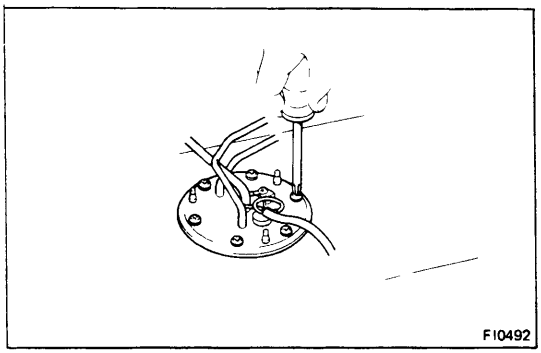

INSTALLATION OF FUEL PUMP

(See page FI-45)

1. INSTALL FUEL PUMP FILTER TO FUEL PUMP

2. INSTALL FUEL PUMP TO FUEL PUMP BRACKET
   (a) Insert the outlet port of the fuel pump into the fuel hose.
   (b) Install the rubber cushion to the lower side of the fuel pump.
   (c) Push the lower side of the fuel pump, together with the rubber cushion, into the fuel pump bracket.

3. INSTALL FUEL PUMP BRACKET
   (a) Place the bracket with a new gasket on the fuel tank.
   (b) Install the tighten the seven bolts.

4. INSTALL FUEL TANK

   When installing the fuel tank, refer to FI-55 for the installation position of the protector and hose and the tightening torque.

   After installation, check for leaks.

Cold Start Injector

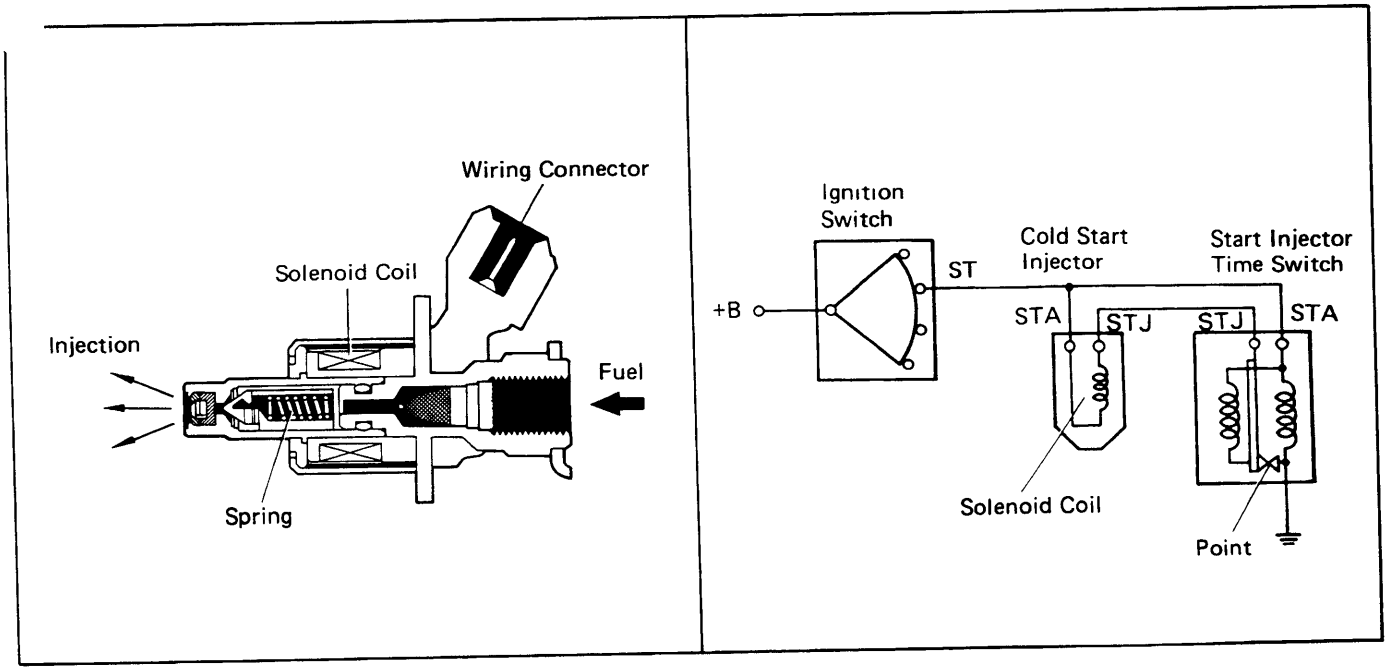

REMOVAL OF COLD START INJECTOR

REMOVE COLD START INJECTOR

(a) Disconnect the cold start injector wire.

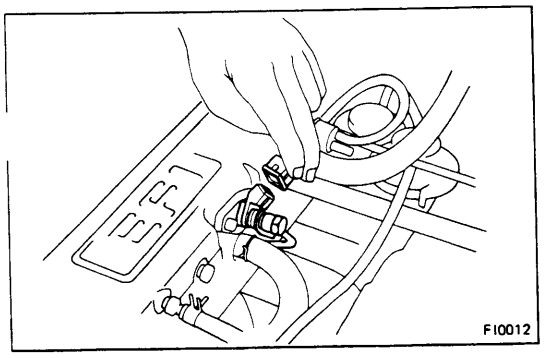

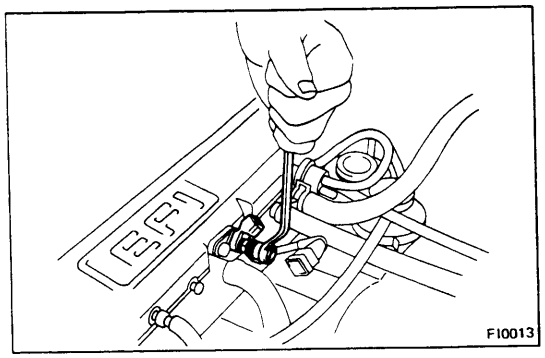

(b) Remove the fuel pipe between the cold start injector and fuel delivery pipe.

(c) Remove the cold start injector wire gasket.

(d) Put a suitable container or shop towel under rear end of the delivery pipe.

INSPECTION OF COLD START INJECTOR

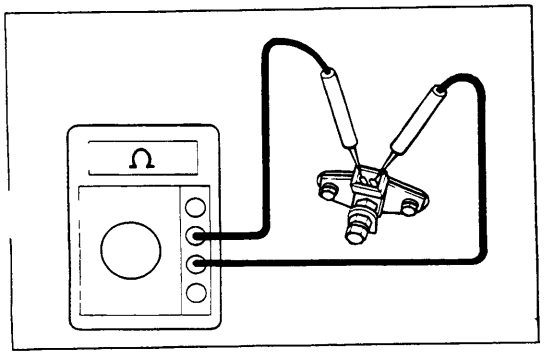

1. **MEASURE RESISTANCE OF COLD START INJECTOR**

Using an ohmmeter, check the resistance of the injector.

Resistance: 2 — 4 Ω

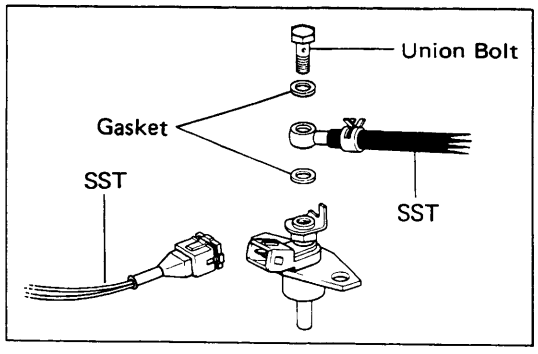

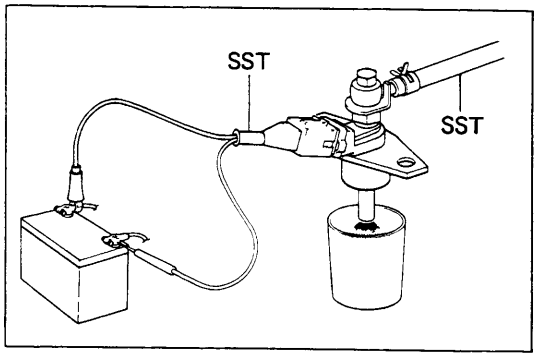

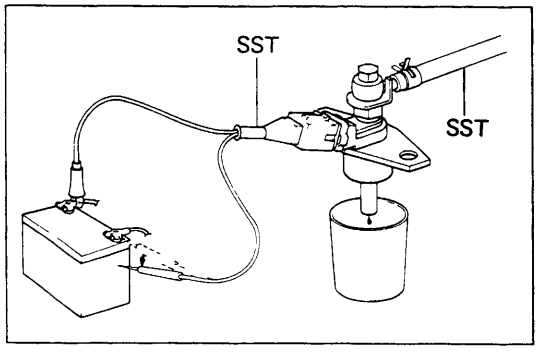

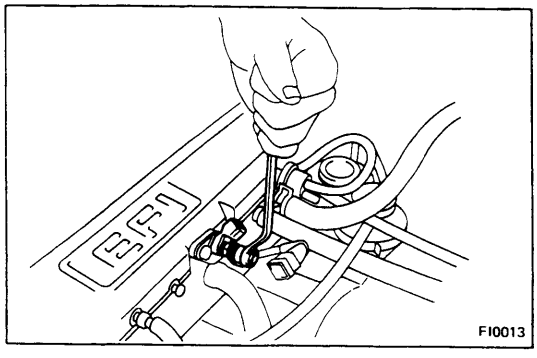

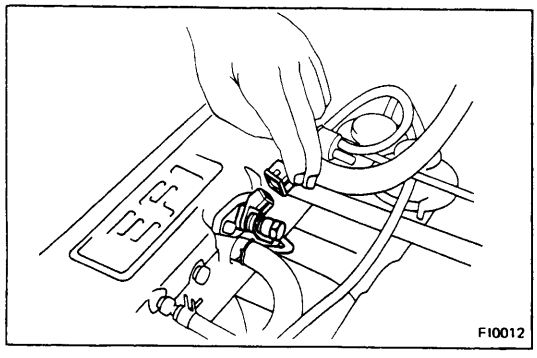

2. CHECK INJECTION OF COLD START INJECTOR

(a) Install the gasket, SST (two unions), another gasket and two union bolts to the delivery pipe and injec

(b) Connect the SST (hose) from the unions.

SST 09268-41045

(c) Connect the SST (wire) to the injector.

SST 09842-30050

NOTE: Position the injector as far away from the battery as possible.

(d) Put a container under the injector.

(e) Turn on the ignition switch.

NOTE: Do not start the engine.

(f) Short both terminals of the fuel pump check connector with a service wire.

(g) Connect the test probes of the SST to the battery and check that the fuel spray is as shown.

SST 09842-30050

NOTE: Perform this check within the shortest possible time.

(h) Disconnect the test probes from the battery and check that fuel does not leak from the injector.

Fuel drop: Less than one drop of fuel per minute

(i) After checking, restore the following to the previc state.

- Fuel pump check connector
- Ignition switch
- SST
- Cold Start injector
- Injector wiring

INSTALLATION OF COLD START INJECTOR

INSTALL COLD START INJECTOR

(a) Using new gaskets, install the cold start injector and two bolts.

(b) Install the fuel pipe between the cold start injector and fuel delivery pipe with new gaskets.

(c) Connect the cold start injector wire.

Pressure Regulator

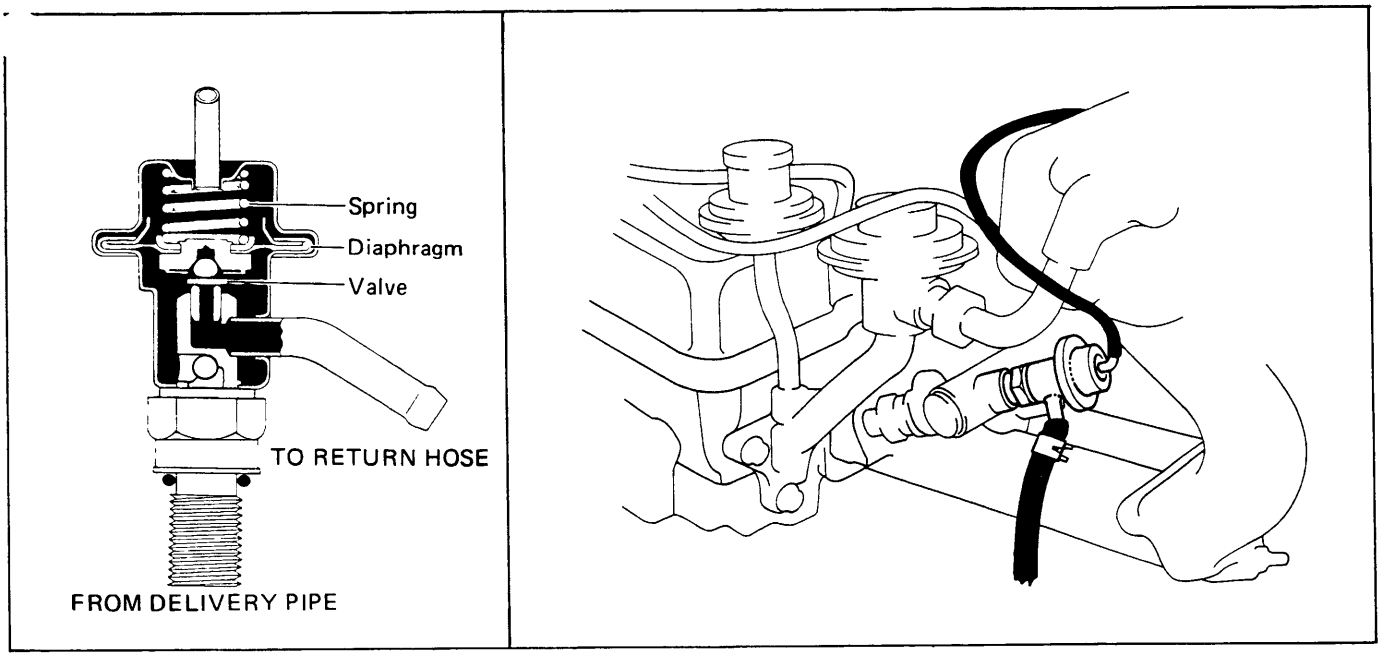

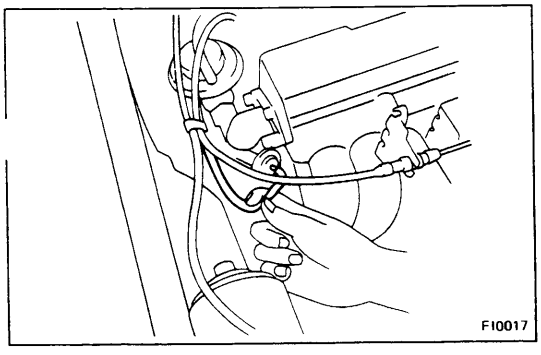

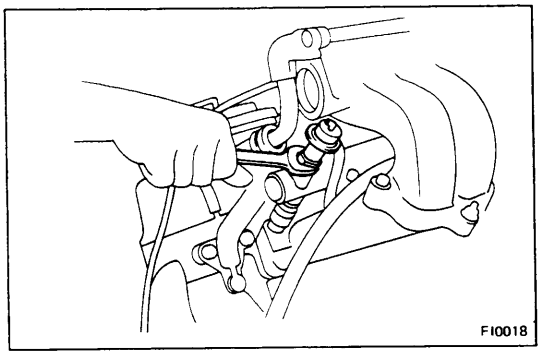

ON-VEHICLE INSPECTION

CHECK FUEL PRESSURE (See page FI-43)

REMOVAL OF PRESSURE REGULATOR

1. **DISCONNECT VACUUM SENSING HOSE**
2. **DISCONNECT FUEL HOSE**
   (a) Put a suitable container or shop towel under the pressure regulator.
   (b) Disconnect the fuel hose from the pressure regulator.
3. **REMOVE PRESSURE REGULATOR**
   Remove the lock nut, and remove pressure regulator.

INSTALLATION OF PRESSURE REGULATOR

1. **INSTALL PRESSURE REGULATOR**
   Install the pressure regulator and lock nut.
   Torque the lock nut.
   Torque: 300 kg-cm (22 ft-lb, 29 N·m)
2. **CONNECT FUEL HOSE**
3. **CONNECT VACUUM SENSING HOSE**

Injector

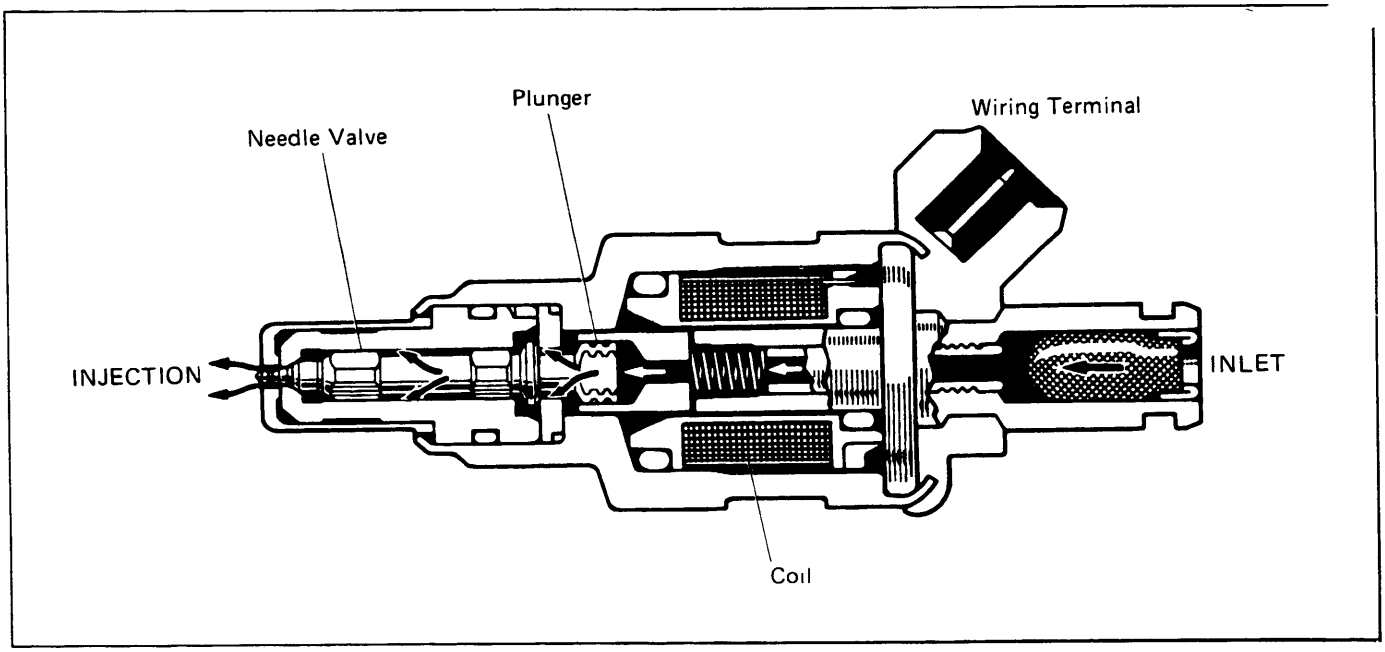

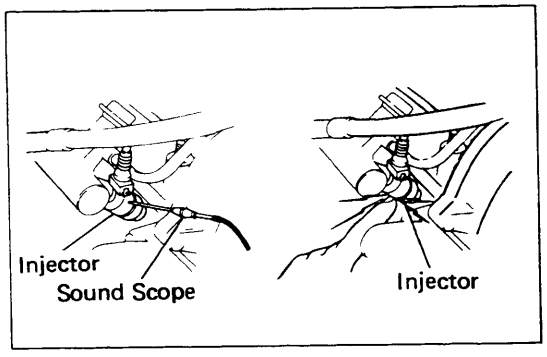

ON-VEHICLE INSPECTION

1. **CHECK INJECTOR OPERATION**

Check for operating sound from each injector.

(a) With the engine running or cranking, use a sound scope to check that there is normal operating noise in proportion to engine rpm.

(b) If you have no sound scope, you can check the injector transmission operation with your finger.

If no sound or an unusual sound is heard, check the wiring connector, injector, resistor or injection signal from ECU.

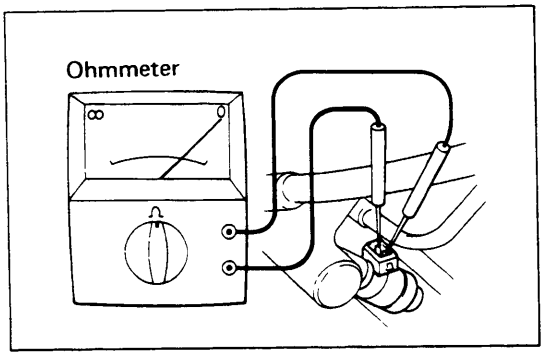

2. **MEASURE RESISTANCE OF INJECTOR**

(a) Unplug the wiring connector from the injector.

(b) Using an ohmmeter, check the continuity of both terminals.

Resistance: 1.5 — 3.0 Ω

REMOVAL OF INJECTOR

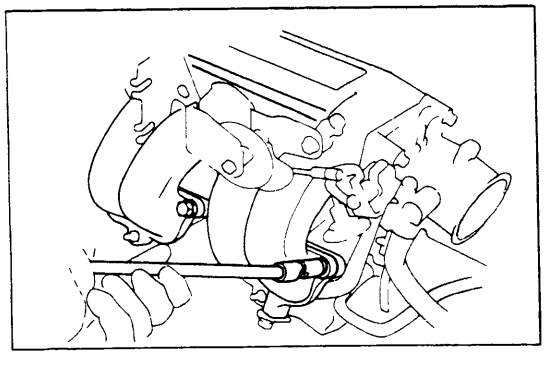

1. **REMOVE CHAMBER WITH THROTTLE BODY**
(See steps 8 to 12 on page EM-13)

2. **DISCONNECT WIRES**
(See step 13 on page EM-13)

3. **DISCONNECT FUEL HOSE FROM DELIVERY PIPE**
(See step 14 on page EM-13)

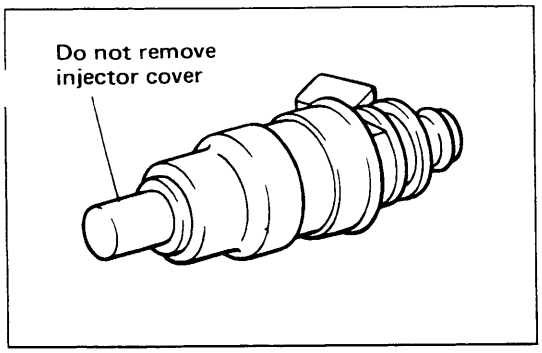

4. REMOVE DELIVERY PIPE WITH INJECTORS

Remove two bolts and then remove the delivery pipe with the injectors.

NOTE:
1. When removing the delivery pipe, be careful not to drop the injectors.
2. Do not remove the injector cover.

INSPECTION OF INJECTOR

1. TEST INJECTION OF INJECTORS

CAUTION: Keep clear of sparks during the test.

(a) Connect the SST to the fuel filter outlet.

SST 09268-41045

(b) Connect the SST to the pressure regulator and the injector.

SST 09268-41045

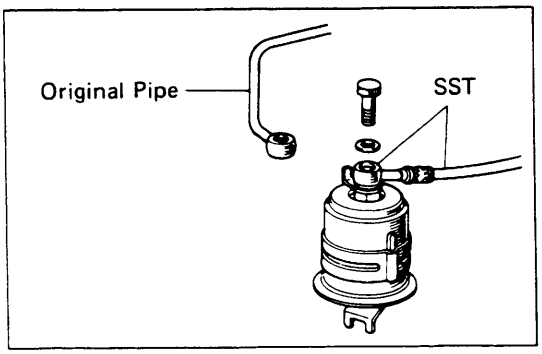

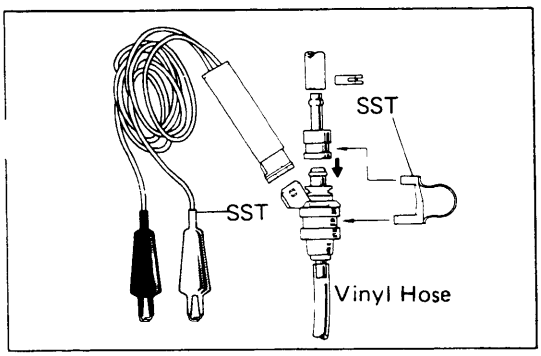

(c) Hold the injector and hose with SST.

SST 09842-30020

(d) Put the injector into the graduated cylinder.

NOTE: Install a suitable vinyl hose onto the injector to prevent gasoline from splashing out.

(e) Connect the ground cable to the battery.

(f) Turn the ignition switch ON.

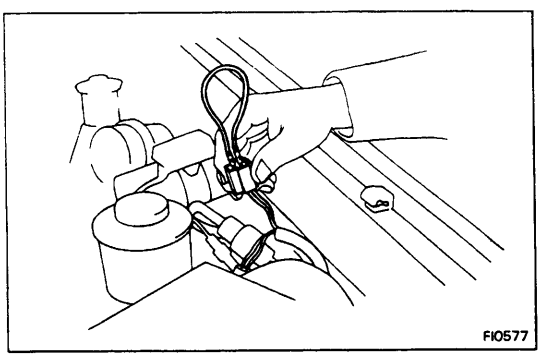

NOTE: Do not start the engine.

(g) Using a service wire, short both terminals of the fuel pump check connector.

NOTE: Fuel pump will operate.

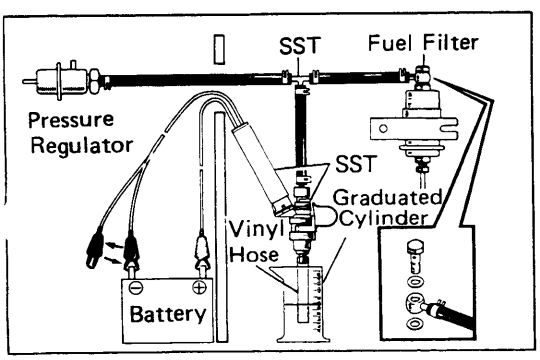

(h) Connect the SST to the battery for 15 seconds and measure the injection volume with a graduated cylinder.
Test each injector two or three times.If not within specified volume, clean or replace.

SST 09842-30020

Volume: 40 — 50 cc/15 sec. (2.4 — 3.1 cu in.)
Difference between each injector: Less than 6 cc (0.37 cu in.)

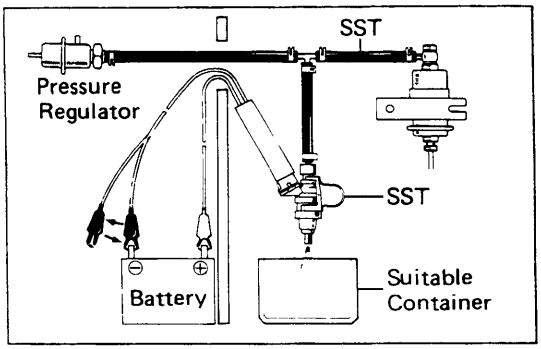

NOTE: If not within specified volume, clean or replace the injector.

(i) Remove the vinyl hose.

(j) Connect the SST to the battery, and test the injection spray pattern in a suitable container.

WARNING: Be careful to keep clear of sparks during the test.

Proper injection spray pattern:

- A fine mist spreading out into a conical shape (pattern A).

Faulty injection spray pattern:

- Injection is in 1 or more streams, not forming into a conical shape (pattern B).
- Imperfect conical shape (pattern C).

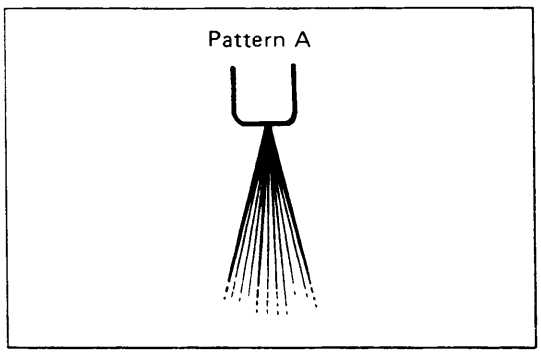

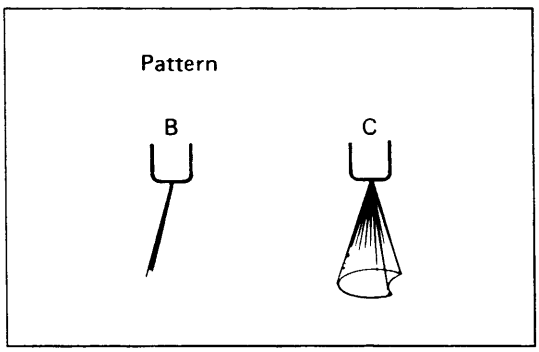

NOTE: If injection spray pattern is not within specification, clean or replace the injector.

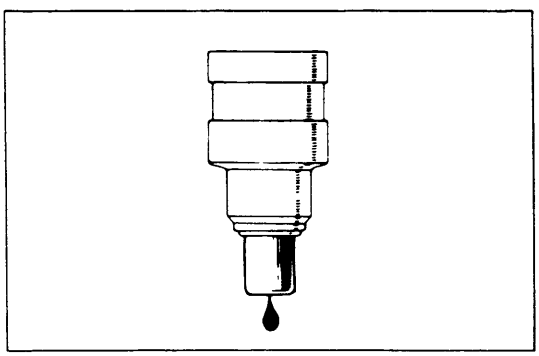

2. TEST LEAKAGE

(a) From the previous condition, disconnect the SST from the battery and check the fuel leakage from the injection nozzle.

SST 09842-30020

Fuel drop: Less than one fuel drop of fuel per minute

(b) Disconnect the battery ground cable.

Remove the SST and disconnect the service wire from the fuel pump service connector.

SST 09268-41045

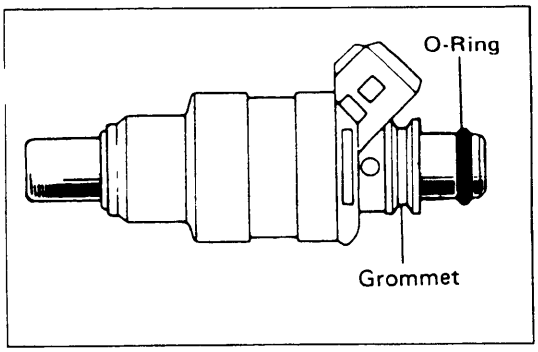

INSTALLATION OF INJECTORS

1. INSTALL INJECTORS INTO DELIVERY PIPE

(a) Install the grommet and a new O-ring to the injector.

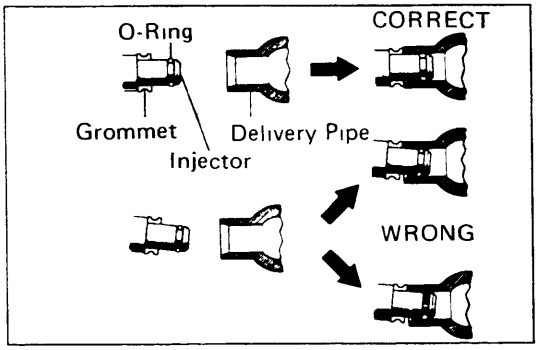

(b) Apply a thin coat of gasoline to the O-rings and install the injectors into the delivery pipe.

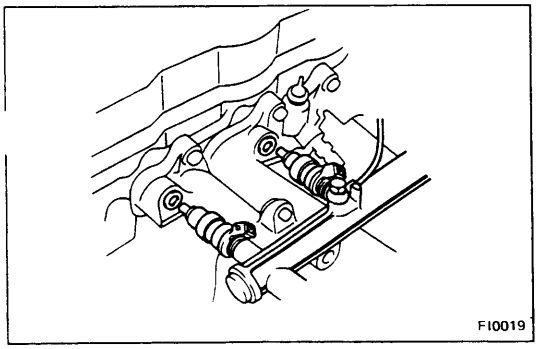

2. INSTALL DELIVERY PIPE WITH INJECTORS

(a) Install the four insulators into the injector hole of the intake manifold.

(b) Install the injectors together with the delivery pipe to the manifold.

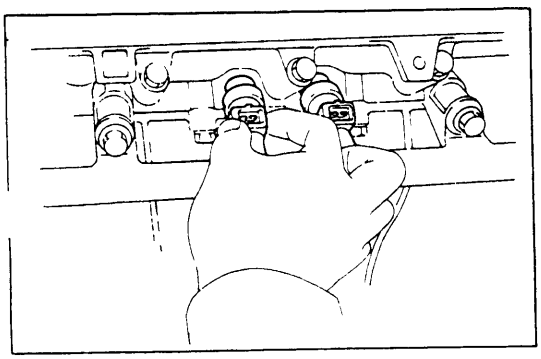

(c) Make sure that the injectors rotate smoothly.

NOTE: If the injectors do not rotate smoothly, probable cause may be incorrect installation of O-rings. Replace O-rings again after removing the injectors.

(d) Install and torque the bolts.

Torque: 195 kg-cm (14 ft-lb, 19 N·m)

3. CONNECT FUEL HOSE TO DELIVERY PIPE

(See step 5 on page EM-30)

4. CONNECT WIRES
(See step 5 on page EM-30)

5. INSTALL CHAMBER WITH THROTTLE BODY
(See step 7 on page EM-30)

6. CONNECT CABLES TO BRACKET
(See step 11 on page EM-31)

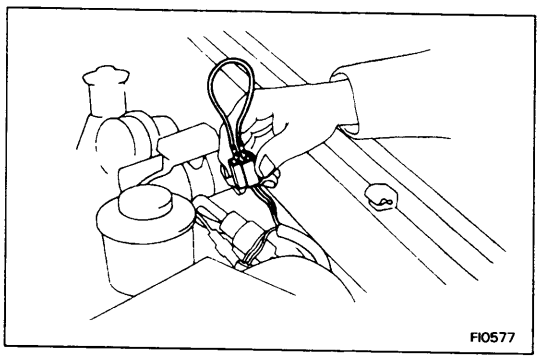
FI0577

7. CHECK FOR FUEL LEAKAGE

(a) With the ignition switch ON, use a service wire to short both terminals of the fuel pump check connector.

(b) Check for fuel leakage.

(c) Remove the service wire from the fuel pump check connector.

Fuel Tank and Line

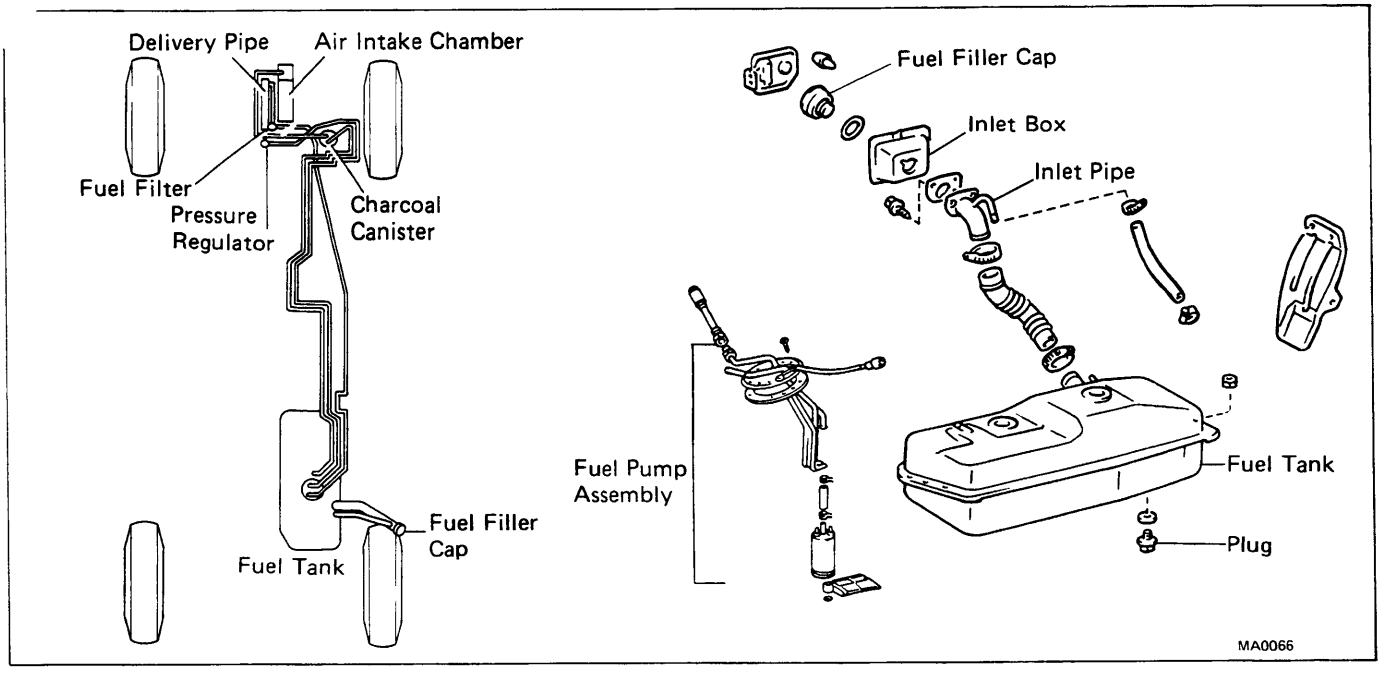

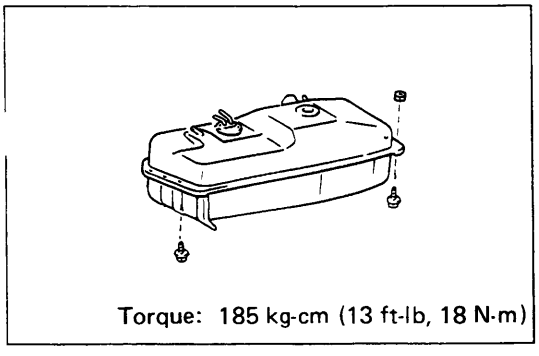

PRECAUTIONS

1. **Always use new gaskets when replacing the fuel tank or component parts.**
2. **Apply the proper torque to all tightening parts.**

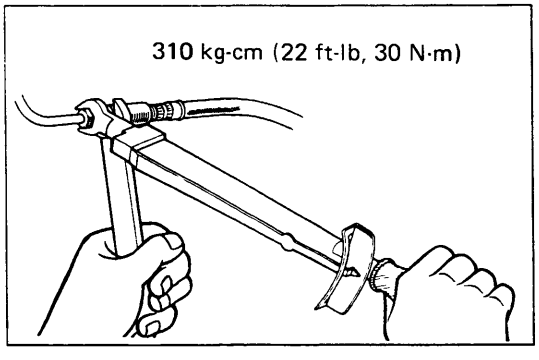

INSPECT FUEL LINES AND CONNECTIONS

(a) Inspect the fuel lines for cracks, or leakage and connections for deformation.

(b) Inspect the fuel tank vapor vent system hoses and connections for looseness, sharp bends or damage.

(c) Inspect the fuel tank for deformation, cracks, fuel leakage or tank band looseness.

(d) Inspect the pipe for damage or fuel leakage.

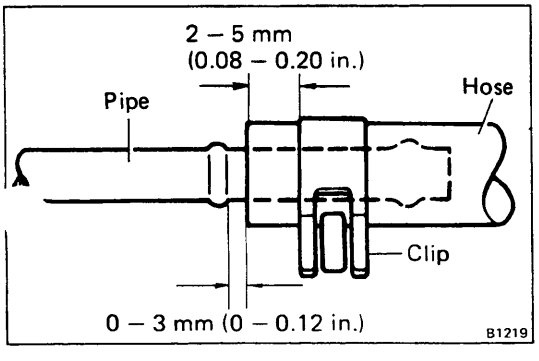

(e) The hose and tube connections are as shown in the illustration.

If a problem is found, repair or replace the parts as necessary.

AIR INTAKE SYSTEM
Air Flow Meter

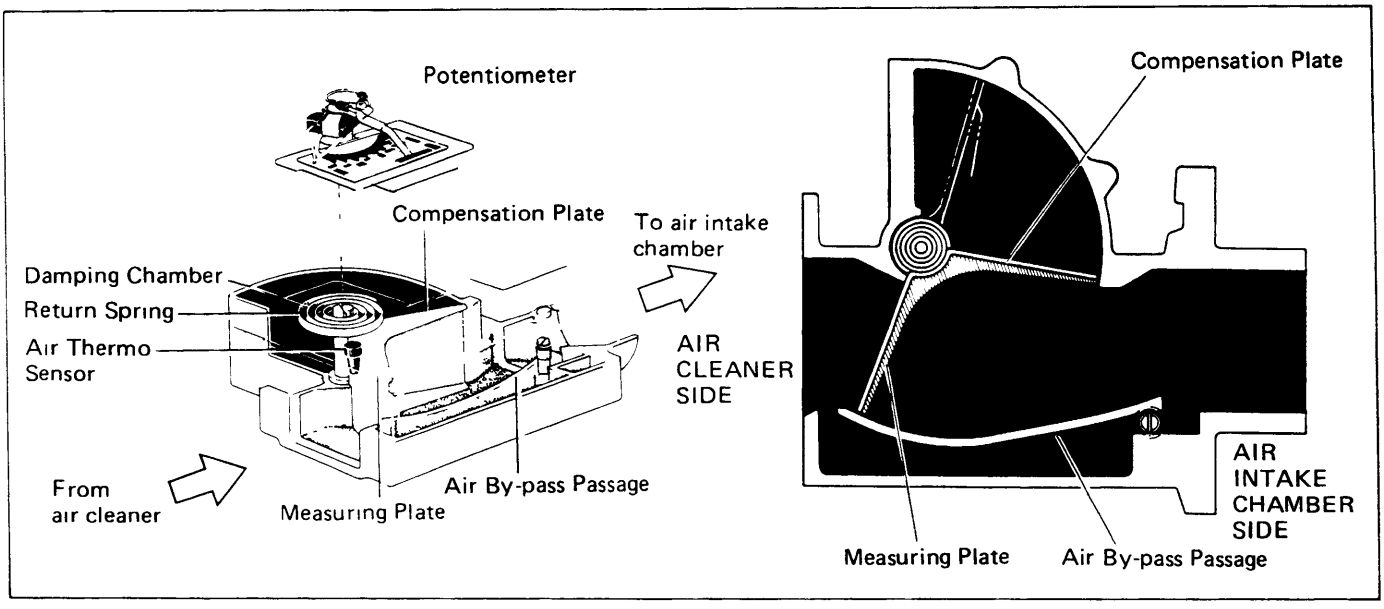

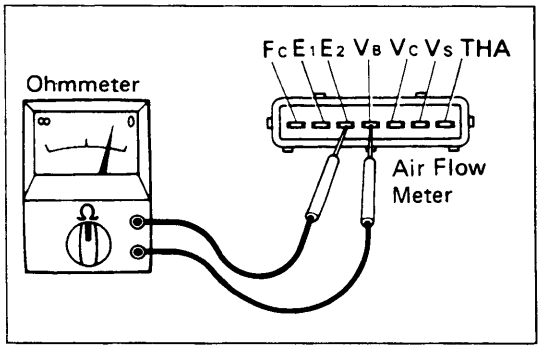

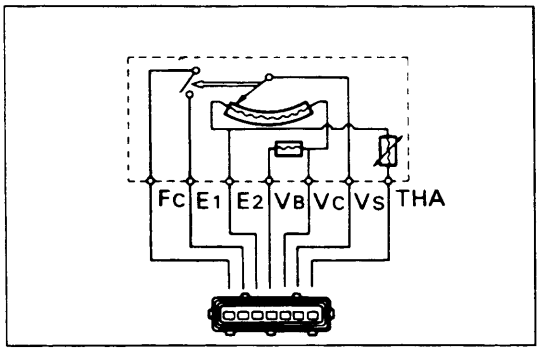

ON-VEHICLE INSPECTION

MEASURE RESISTANCE OF AIR FLOW METER

(a) Unplug the wiring connector from the air flow met

(b) Using an ohmmeter, measure the resistance between each terminal.

Between terminals	Resistance	Temperature
E_2 — V_S	20 — 400 Ω	—
E_2 — V_C	100 — 300 Ω	—
E_2 — V_B	200 — 400 Ω	—
E_2 — THA	10 — 20 KΩ 4 — 7 KΩ 2 — 3 KΩ 0.9 — 1.3 KΩ 0.4 — 0.7 KΩ	−20°C (−4°F) 0°C (32°F) 20°C (68°F) 40°C (104°F) 60°C (140°F)
E_1 — F_C	Infinity	—

If not within specification, replace the air flow meter.

REMOVAL OF AIR FLOW METER

1. **DISCONNECT AIR HOSES**
2. **DISCONNECT AIR FLOW METER CONNECTOR**
3. **REMOVE AIR FLOW METER**

Remove the bolt and three nuts.

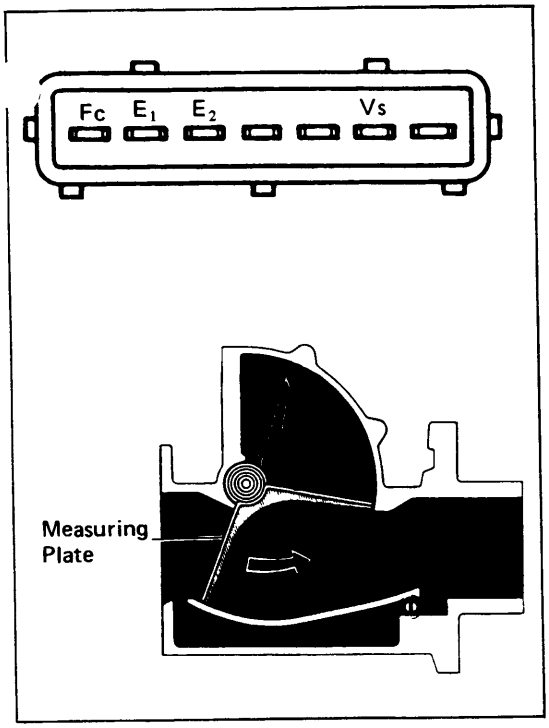

INSPECTION OF AIR FLOW METER

MEASURE RESISTANCE OF AIR FLOW METER

Move the measuring plate and, using ohmmeter, measure the resistance between each terminal.

Between terminals	Resistance (Ω)	Measuring plate opening
E_1 — Fc	Infinity	Fully closed
	Zero	Other than closed position
E_2 — Vs	20 — 400	Fully closed
	20 — 1,000	Fully closed to fully open position

NOTE: Resistance between E_2 and Vs will change in accordance with the measuring plate opening.

INSTALLATION OF AIR FLOW METER

1. **INSTALL AIR FLOW METER**
   Install the three nuts and a bolt.
2. **CONNECT AIR FLOW METER CONNECTOR**
3. **INSTALL AIR HOSE**

Air Valve

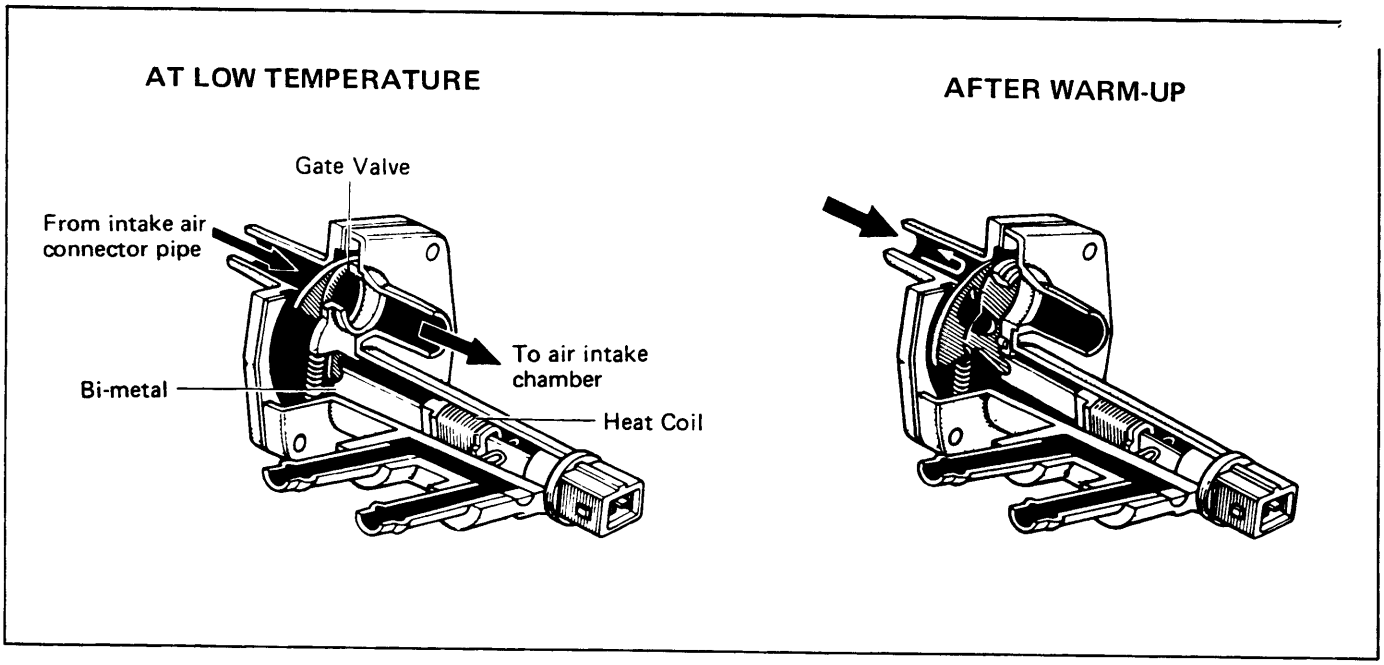

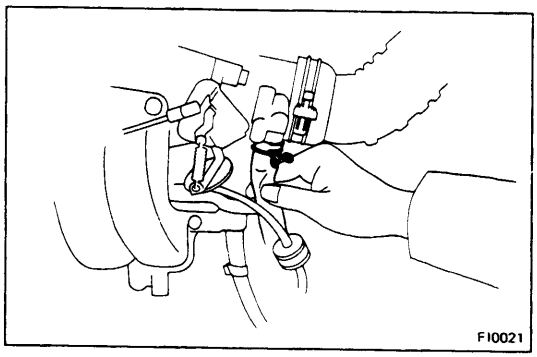

ON-VEHICLE CHECK

1. **CHECK OPERATION OF AIR VALVE**

   Check the engine RPM by pinching shut the air hose.

   At Low Temp. (Coolant Temp. : below 60°C or 140°F)

   - When the hose is pinched, the engine RPM should drop.

   After warm-up

   - When the hose is pinched, check that the engine RPM does not drop more than 50 RPM.

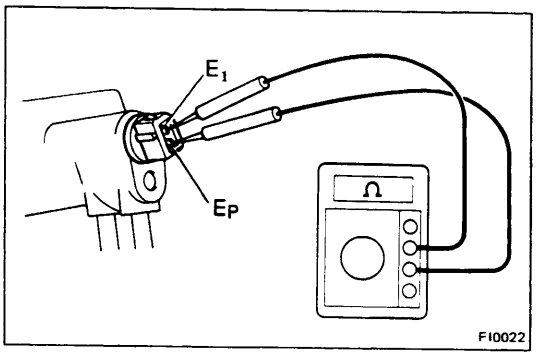

2. **MEASURE RESISTANCE OF AIR VALVE**

   Using an ohmmeter, measure the heat coil resistance of the air valve.

   Resistance (Ep–E1): 39–59 Ω

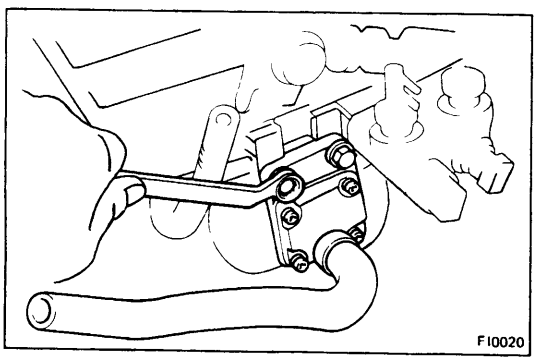

REMOVAL OF AIR VALVE

1. **DISCONNECT TWO AIR VALVE HOSES**
2. **DISCONNECT AIR VALVE CONNECTOR**
3. **DISCONNECT WATER BY-PASS HOSE**
4. **REMOVE AIR VALVE**

   Remove the two bolts and the air valve and gasket.

When the room temp. is approx. 20°C (68°F)

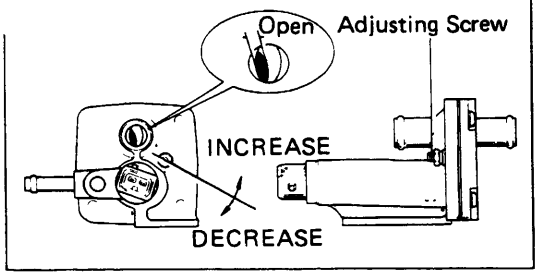

INSPECTION OF AIR VALVE

CHECK OPENING CONDITION OF AIR VALVE

Check that the valve opens slightly, as illustrated, when room temp. is about 20°C (68°F).

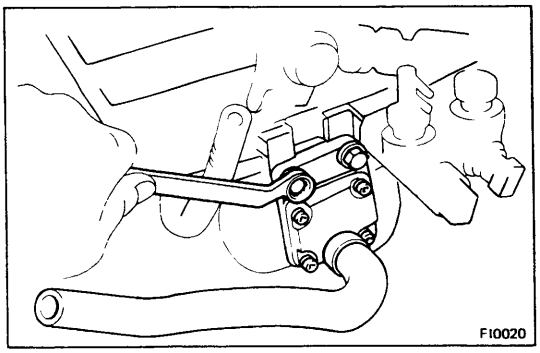

INSTALLATION OF AIR VALVE

1. **INSTALL AIR VALVE**
   Use a new gasket and install the air valve and two bolts.
2. **CONNECT WATER BY-PASS HOSE**
3. **CONNECT AIR VALVE CONNECTOR**
4. **CONNECT TWO AIR VALVE HOSES**

Throttle Body

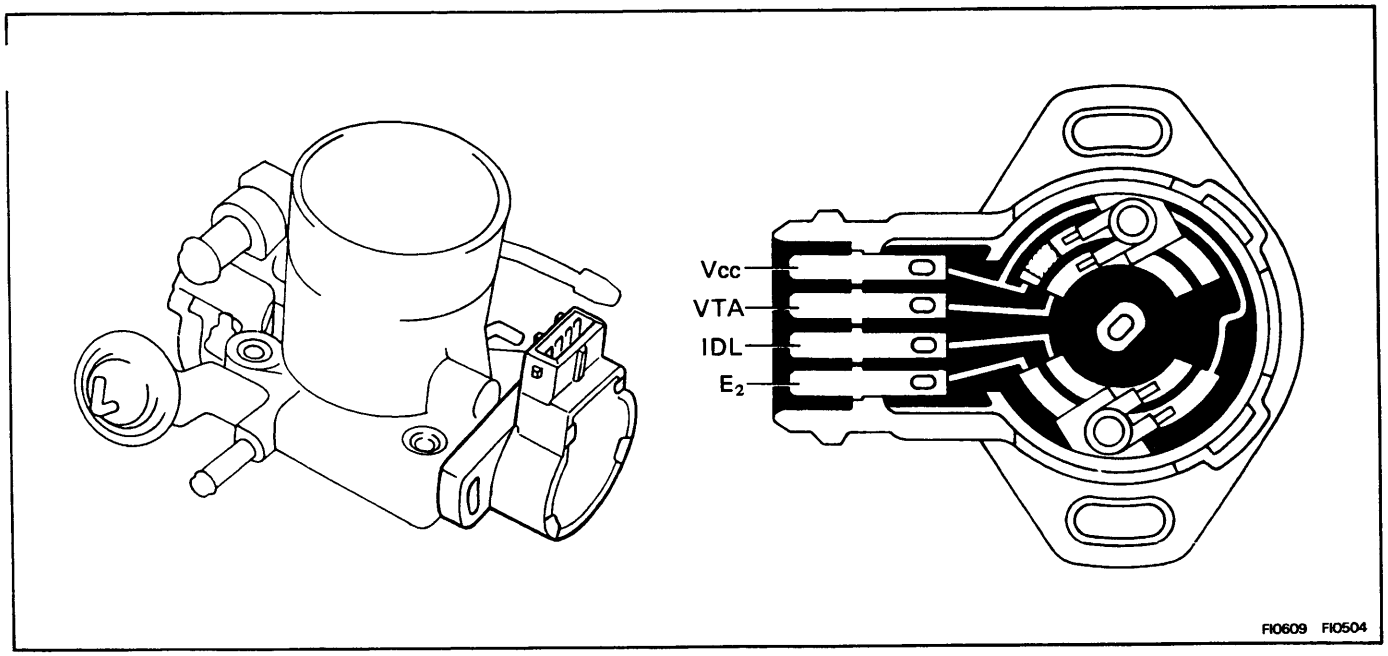

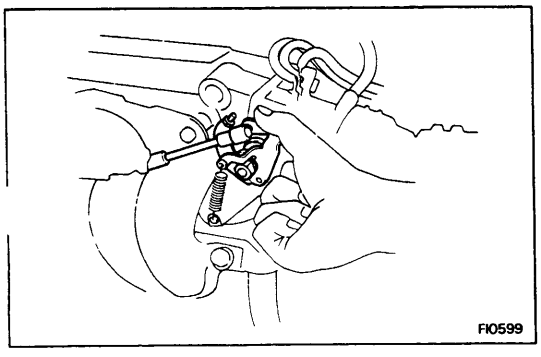

ON-VEHICLE CHECK

1. **CHECK THROTTLE BODY**
   (a) Check that the throttle linkage moves smoothly.

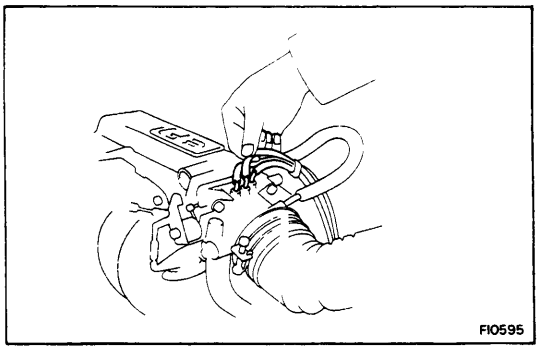

(b) Check the vacuum at each port.
- Start the engine.
- Check the vacuum with your finger.

Port No.	At idling	At 3,000 rpm
E	No vacuum	Vacuum
R	No vacuum	Vacuum
P	No vacuum	Vacuum

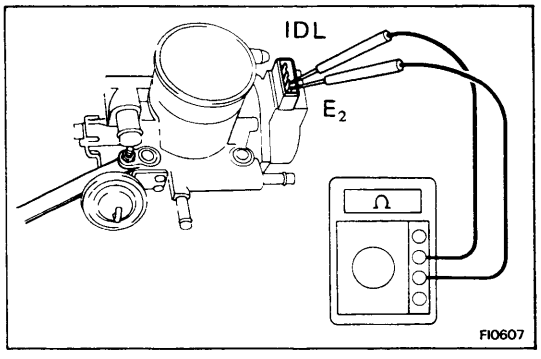

2. CHECK THROTTLE POSITION SENSOR

Check the resistance between the terminals.
- Unplug the connector from the sensor.
- Insert a thickness gauge between the throttle stop screw and stop lever.
- Using an ohmmeter, check the resistance between each terminal.

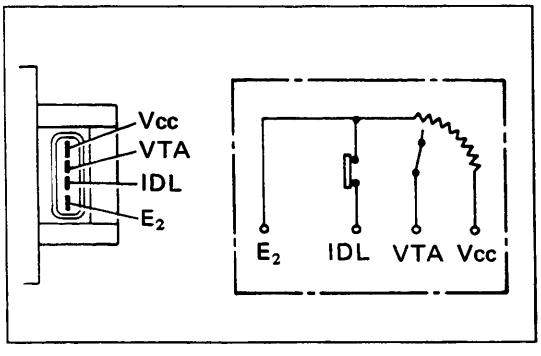

Clearance between lever and stop screw	Between terminals	Resistance
0 mm (0 in.)	VTA – E_2	0.2 – 0.8 kΩ
0.57 mm (0.0224 in.)	IDL – E_2	Less than 2.3 kΩ
0.85 mm (0.0335 in.)	IDL – E_2	Infinity
Throttle valve fully opened position	VTA – E_2	3.3 – 10 kΩ
–	Vcc – E_2	3 – 7 kΩ

REMOVAL OF THROTTLE BODY

1. REMOVE AIR INTAKE CONNECTOR

2. DISCONNECT FOLLOWING HOSES:

(a) No. 1 and No. 2 water by-pass hoses

(b) PCV hose from the throttle body

(c) Label and disconnect the emission control hoses.

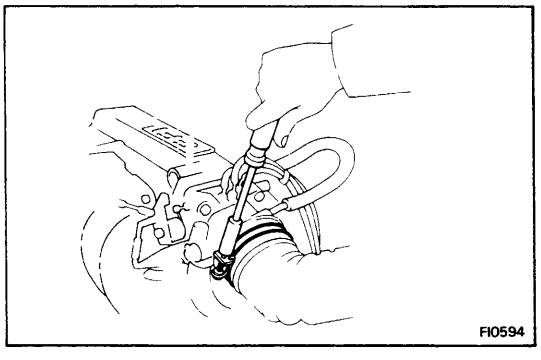

3. DISCONNECT THROTTLE SENSOR CONNECTOR

4. REMOVE THROTTLE BODY

Remove the four bolts and remove the throttle body and gasket.

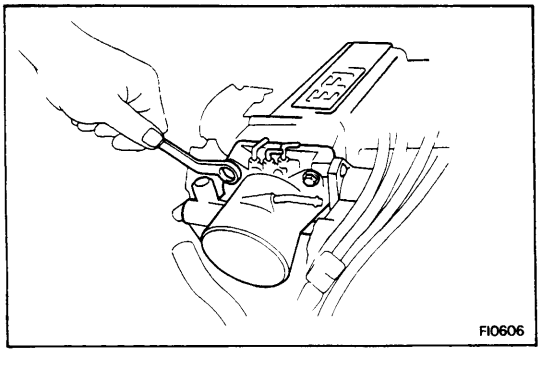

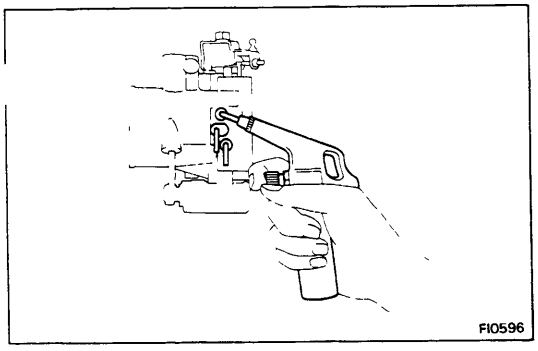

INSPECTION OF THROTTLE BODY

1. CLEAN THROTTLE BODY BEFORE INSPECTION

(a) Wash and clean the cast parts with a soft brush in carburetor cleaner.

(b) Using compressed air, blow all passages and apertures in the throttle body.

CAUTION: To prevent deterioration, do not clean the throttle position sensor.

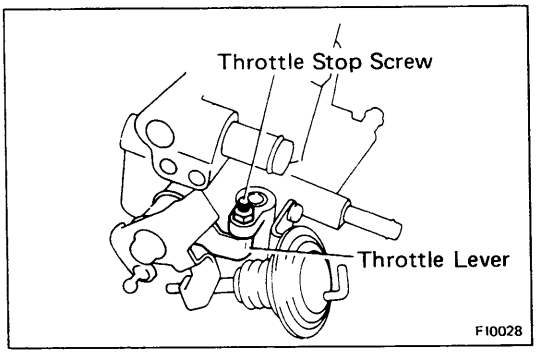

2. CHECK THROTTLE VALVE

(a) Check that there is no clearance between the throttle stop screw and throttle lever when the throttle valve is fully closed.

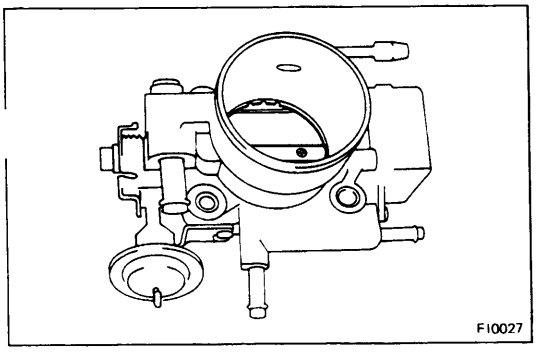

(b) When the throttle valve is fully closed, check that advancer port is located on the air cleaner side as shown in the figure.

If not, adjust the throttle valve closing angle.

NOTE: Do not adjust the throttle valve closing angle if unnecessary.

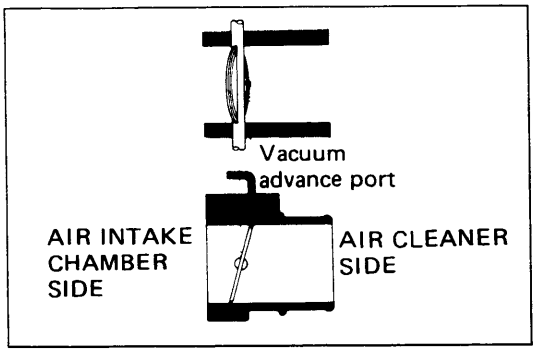

3. IF NECESSARY, ADJUST THROTTLE STOP SCREW

(a) After loosening the lock nut of the throttle stop screw, loosen the stop screw until it is about to touch at the lever.

(b) Have the throttle stopper screw touch the lever. Then screw it in 1/4 turns and lock it with the lock nut.

(c) After installation of the throttle body, make sure that engine rpm.

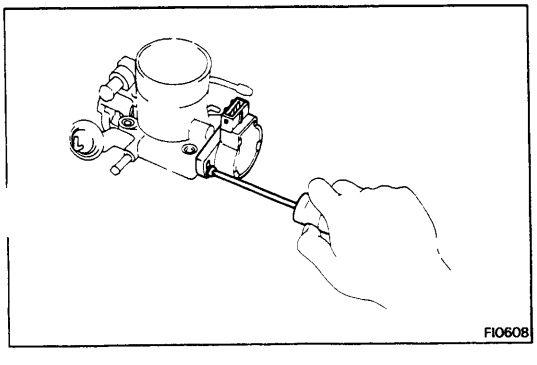

4. CHECK THROTTLE POSITION SENSOR

(See step 2 on page FI-59)

5. IF NECESSARY, ADJUST THROTTLE POSITION SENSOR

(a) Loosen the two screws of the sensor.

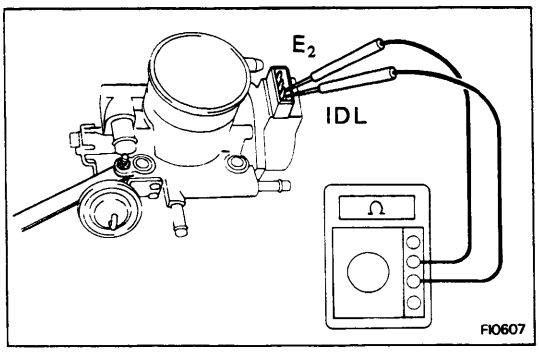

(b) Insert a thickness gauge (0.47 mm or 0.0185 in.) between the throttle stop screw and lever, and connect the ohmmeter to terminals IDL and E_2.

Gradually turn the sensor clockwise until the ohmmeter deflects, and secure the sensor with two screws.

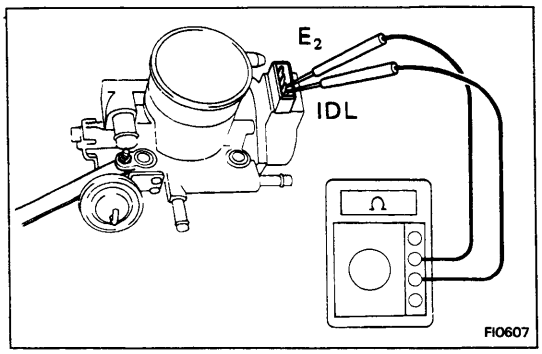

(c) Using a thickness gauge, recheck the continuity between terminals IDL and E_2.

Clearance between lever and stop screw	Continuity (IDL – E_2)
0.57 mm (0.0224 in.)	Continuity
0.85 mm (0.0335 in.)	No continuity

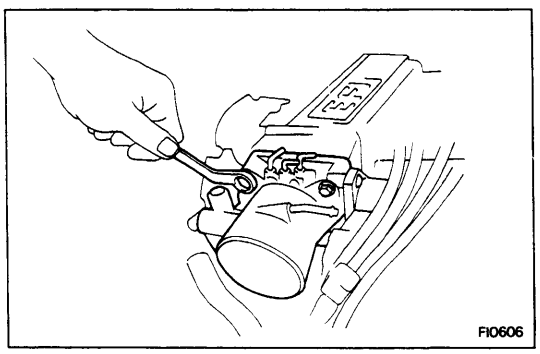

INSTALLATION OF THROTTLE BODY

1. **INSTALL THROTTLE BODY**

   Using new gaskets, install the throttle body and four bolts

2. **CONNECT THROTTLE SENSOR CONNECTOR**

3. **CONNECT FOLLOWING HOSES:**

   (a) Emission control hoses

   (b) PCV hose to throttle body

   (c) No. 1 and No. 2 water by-pass hoses.

4. **INSTALL AIR INTAKE CONNECTOR**

ELECTRONIC CONTROL SYSTEM
Location of Electronic Control Parts

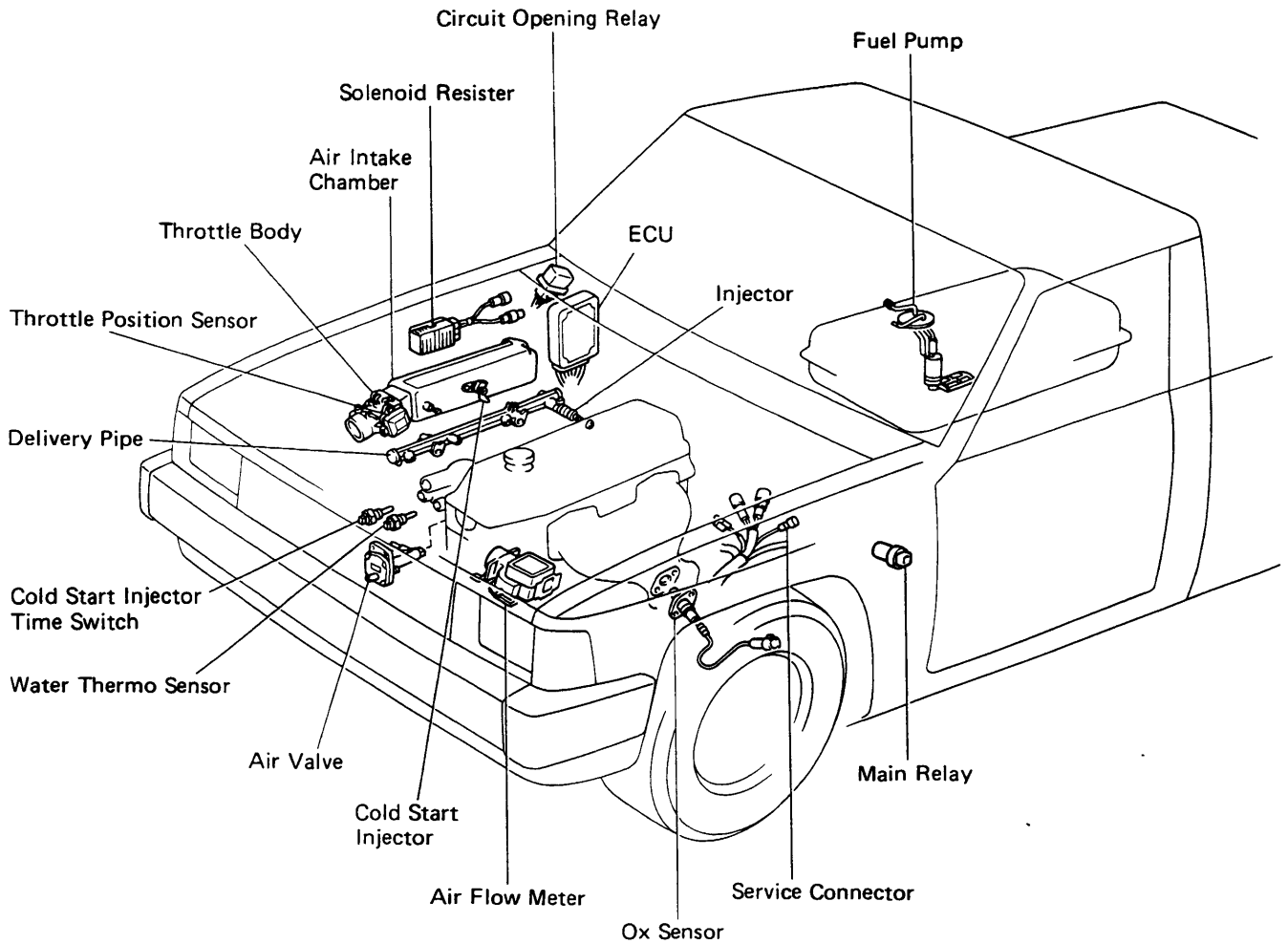

A03956

Main Relay

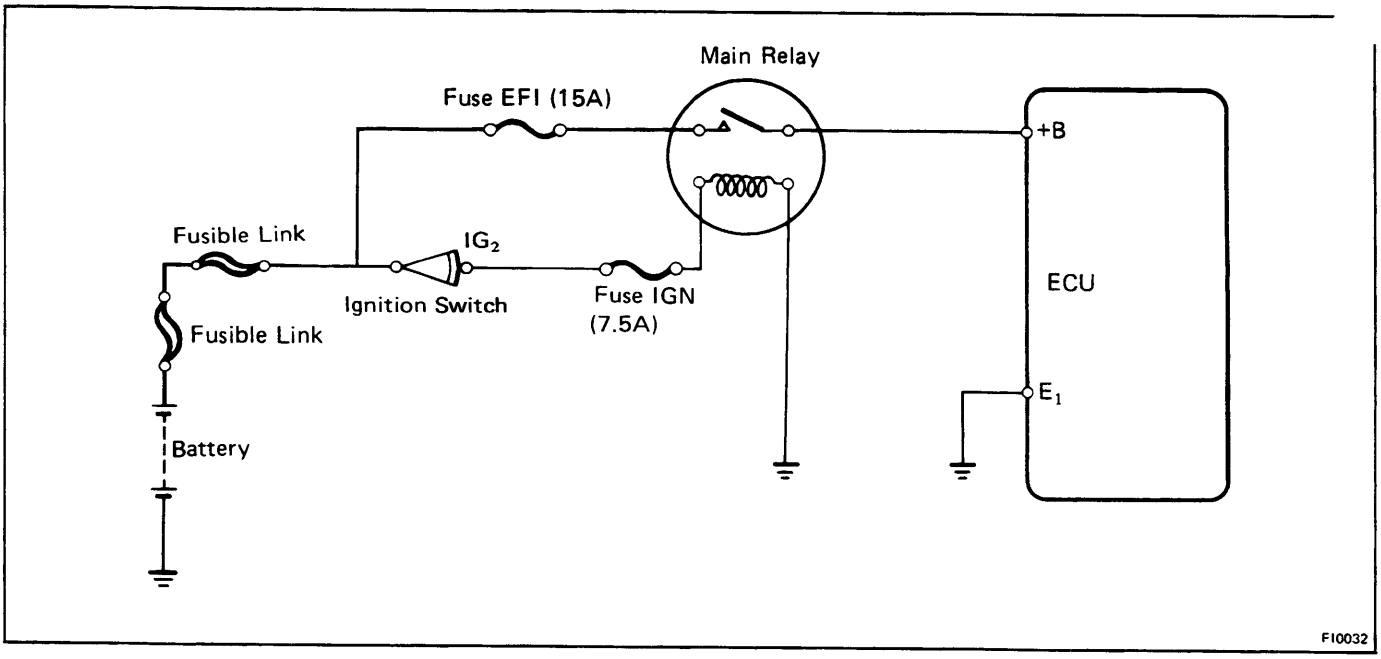

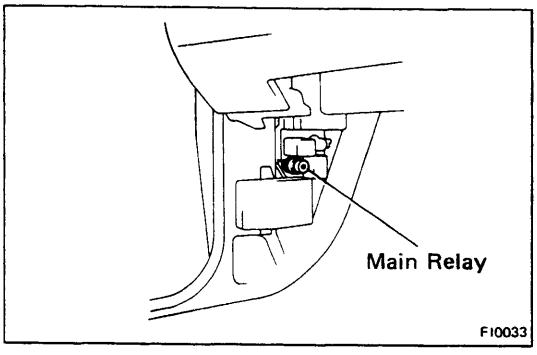

INSPECTION OF MAIN RELAY

1. CHECK MAIN RELAY OPERATION

(a) Turn on the ignition switch.

(b) At this time an operation noise will occur from the relay.

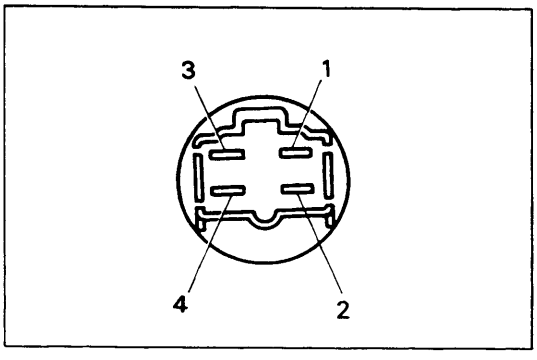

2. MEASURE RESISTANCE OF MAIN RELAYS

(a) Remove the main relay from the relay block.

(b) Measure the resistance between each terminal.

	Between terminals	Resistance (Ω)
Main relay	1 — 2	60 — 80
	3 — 4	Infinity

A03958

Circuit Opening Relay

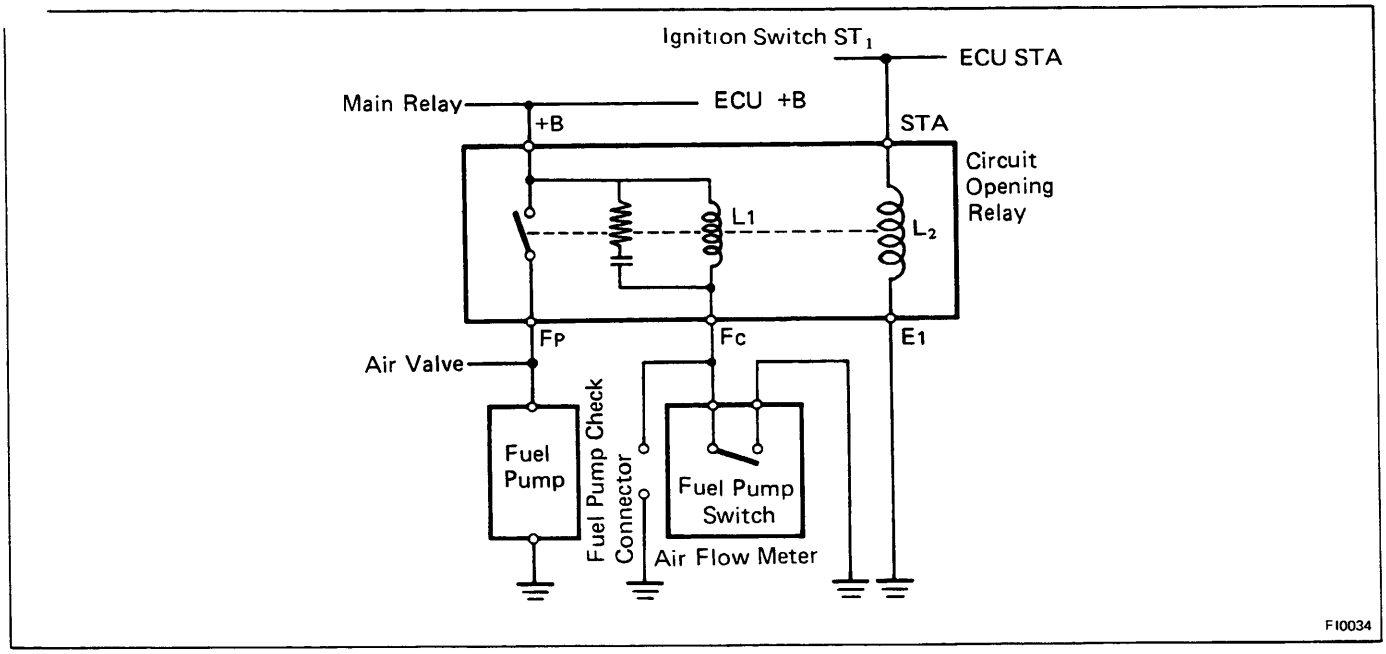

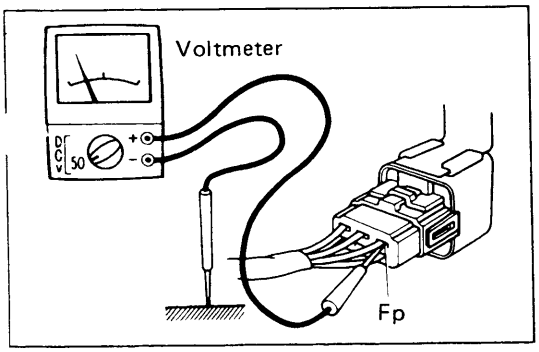

INSPECTION OF CIRCUIT OPENING RELAY

1. CHECK CIRCUIT OPENING RELAY OPERATION

(a) Remove the left kick panel.

(b) Using a voltmeter, check that the meter indicates voltage at Fp terminal during engine cranking and running.

(c) Stop the engine.

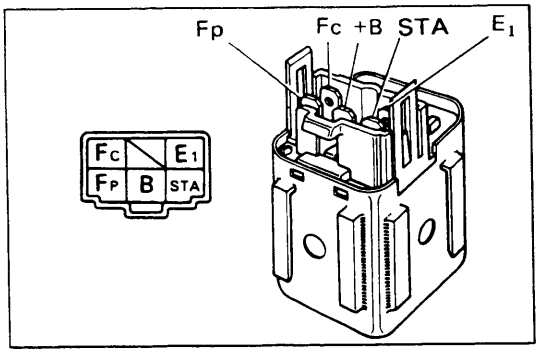

2. MEASURE RESISTANCE OF CIRCUIT OPENING RELAY

(a) Disconnect the connector.

(b) Measure the resistance between each terminal.

Between terminals	Resistance (Ω)
STA — E1	17 — 25
+B — Fc	88 — 132
+B — Fp	Infinity

Solenoid Resistor

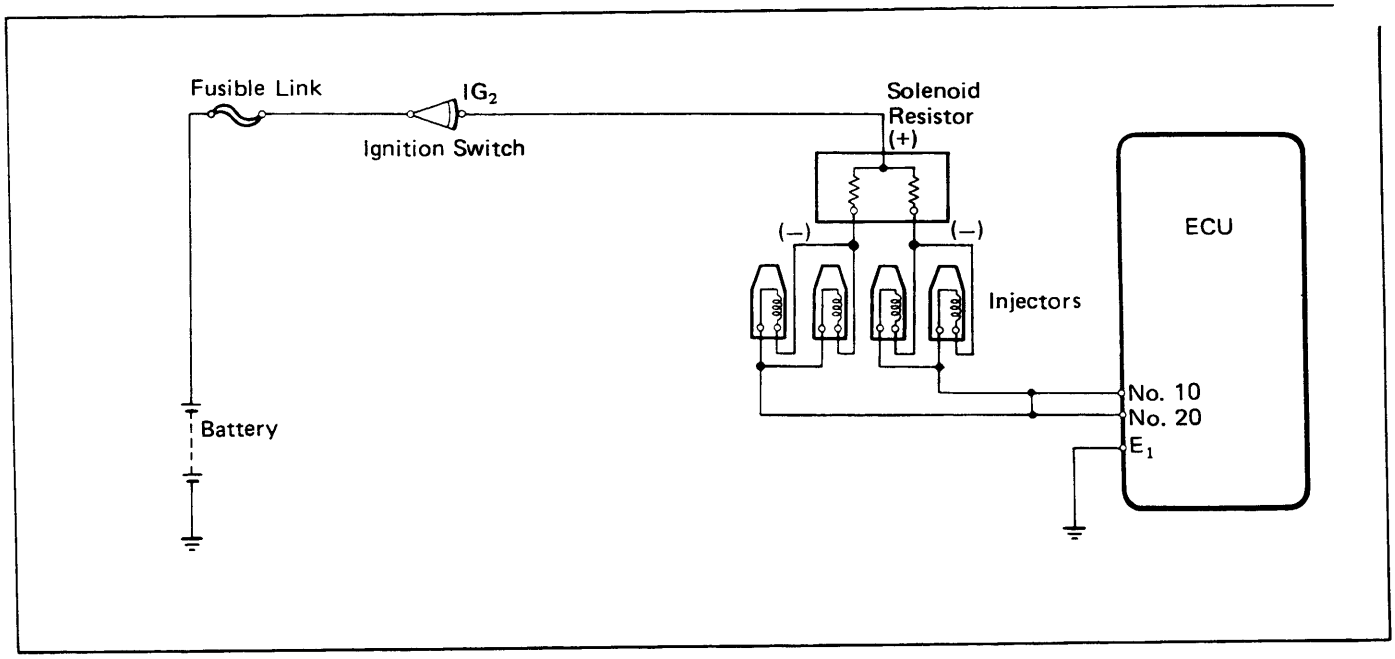

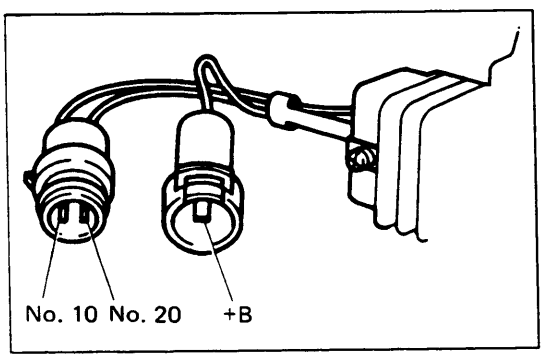

INSPECTION OF SOLENOID RESISTOR

MEASURE RESISTANCE OF SOLENOID RESISTOR

Using an ohmmeter, measure the resistance between and other terminals.

Resistance: 2 – 3 Ω each

Start Injector Time Switch

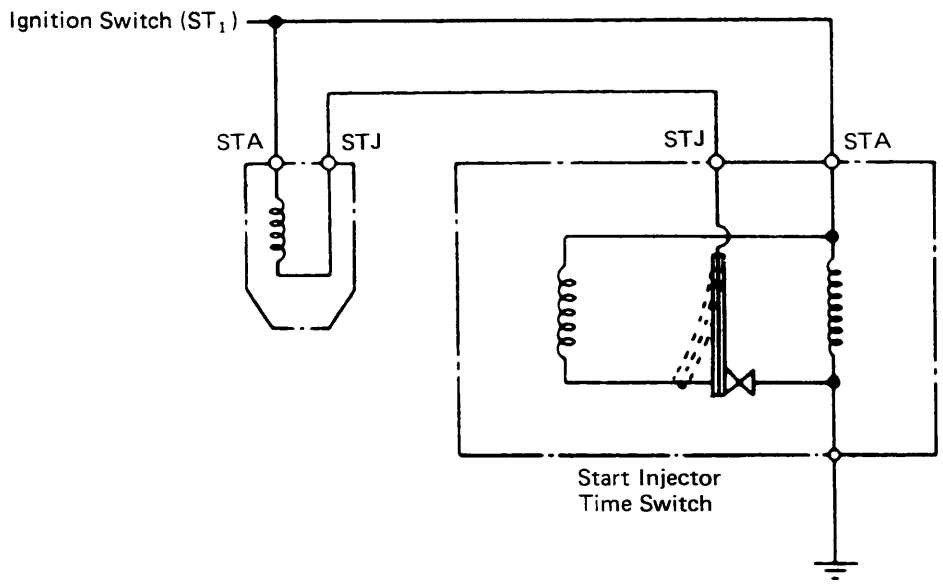

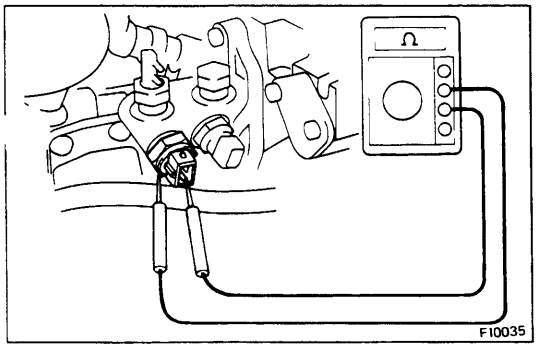

INSPECTION OF START INJECTOR TIME SWITCH

MEASURE RESISTANCE OF START INJECTOR TIME SWITCH

(a) Disconnect the connector.

(b) Using an ohmmeter, measure the resistance between each terminal.

Between terminals	Resistance (Ω)	Coolant temp.
STA – STJ	20 – 40	below 30°C (86°F)
	40 – 60	above 40°C (104°F)
STA – Ground	20 – 80	–

Water Thermo Sensor

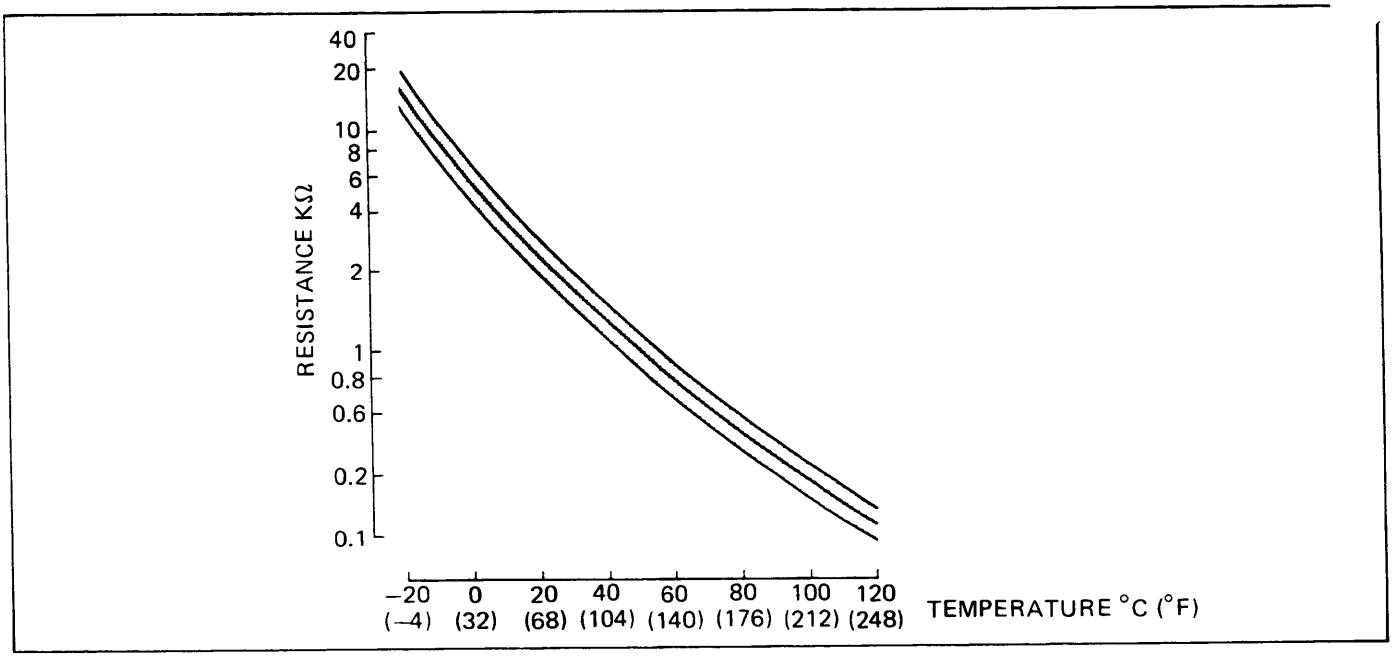

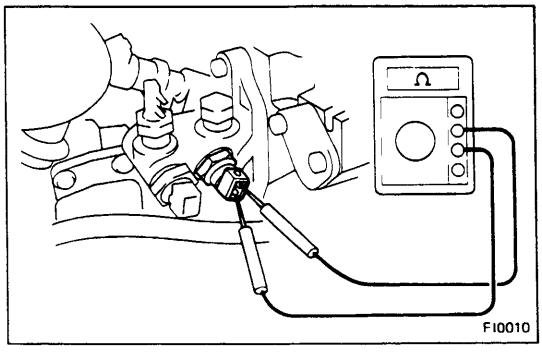

INSPECTION OF WATER THERMO SENSOR

MEASURE RESISTANCE OF WATER THERMO SENSOR

(a) Disconnect the connector.

(b) Using an ohmmeter, measure the resistance between both terminals.

Resistance: Refer to the chart

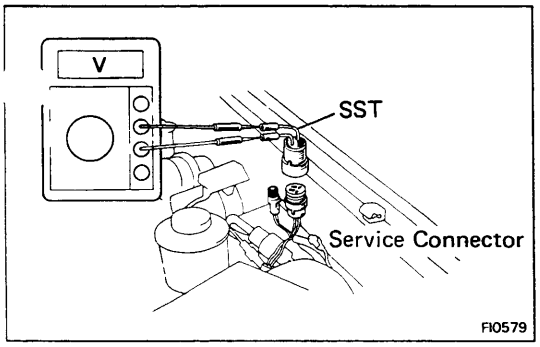

Ox Sensor

INSPECTION OF FEED BACK CONTROL

1. **CONNECT SST AND ANALOG VOLTMETER**

   Connect SST to the service connector and connect a voltmeter to SST.

   SST 09842-14010

   Connect the (+) testing probe to the red wire of the SST and (—) testing probe to the black wire.

2. **WARM-UP ENGINE TO NORMAL OPERATING TEMPERATURE**

3. **CONNECT A TACHOMETER TO ENGINE**

4. **RACE ENGINE AT 2,500 RPM FOR ABOUT 90 SECONDS**

5. **MAINTAIN ENGINE SPEED AT 2,500 RPM**

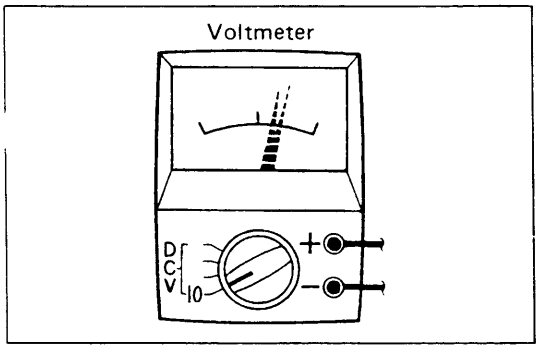

6. **CHECK THAT NEEDLE OF VOLTMETER FLUCTUATES 8 TIMES OR MORE IN 10 SECONDS**

   If not, inspect the EFI system and replace the Ox sensor, if necessary.

7. **STOP ENGINE**

8. **REMOVE VOLTMETER AND SST 09842-14010**

9. **INSTALL RUBBER CAP TO SERVICE CONNECTOR**

INSPECTION OF OX SENSOR

1. Warm-up the engine.
2. Connect a SST to the 4-terminal connector. SST 09842-14010
3. Using a voltmeter connect the positive probe to the red wire of the SST and negative testing probe to the block wire.
4. Warm up the Ox sensor with the engine at 2,500 rpm for about 90 seconds.

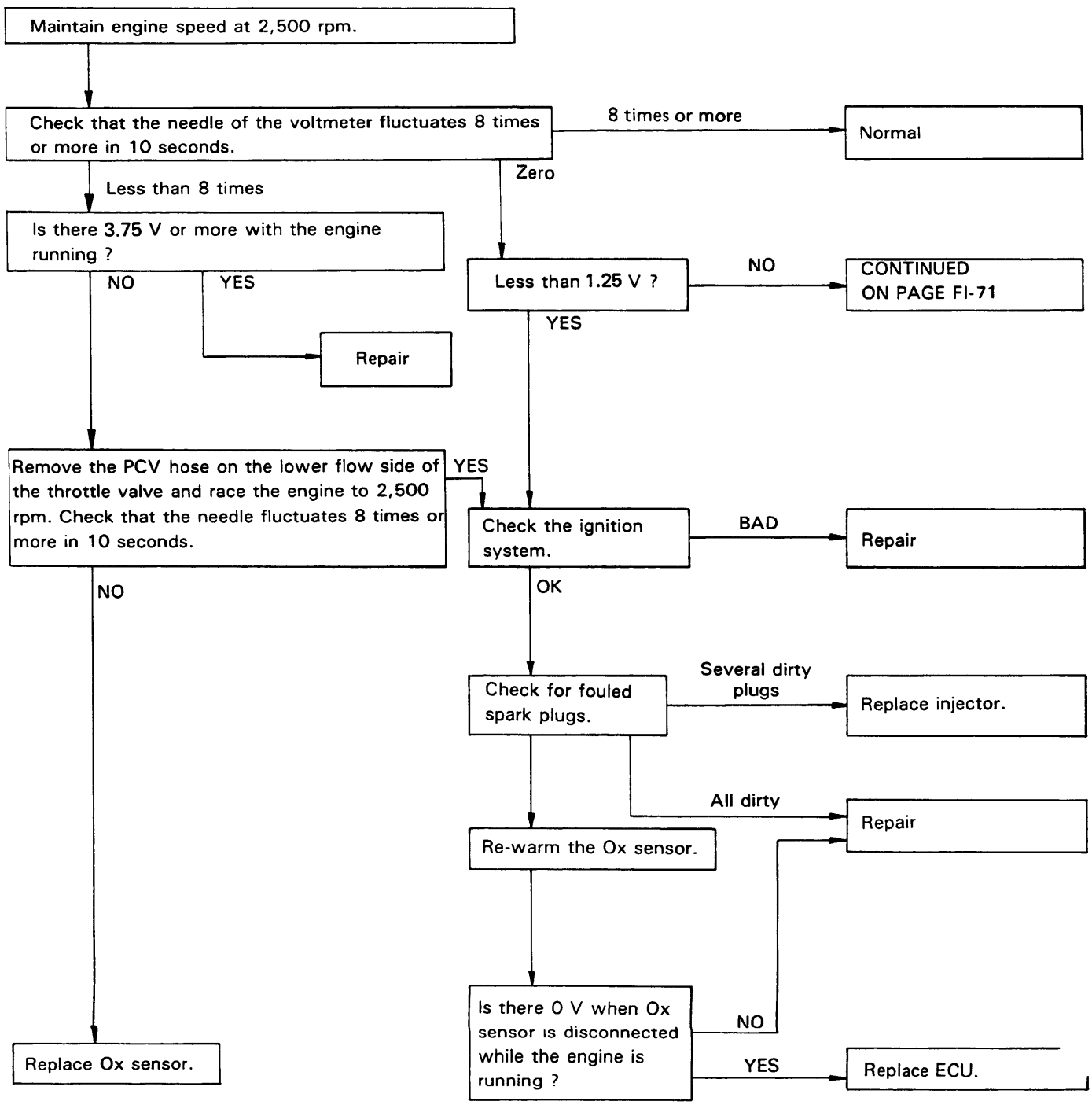

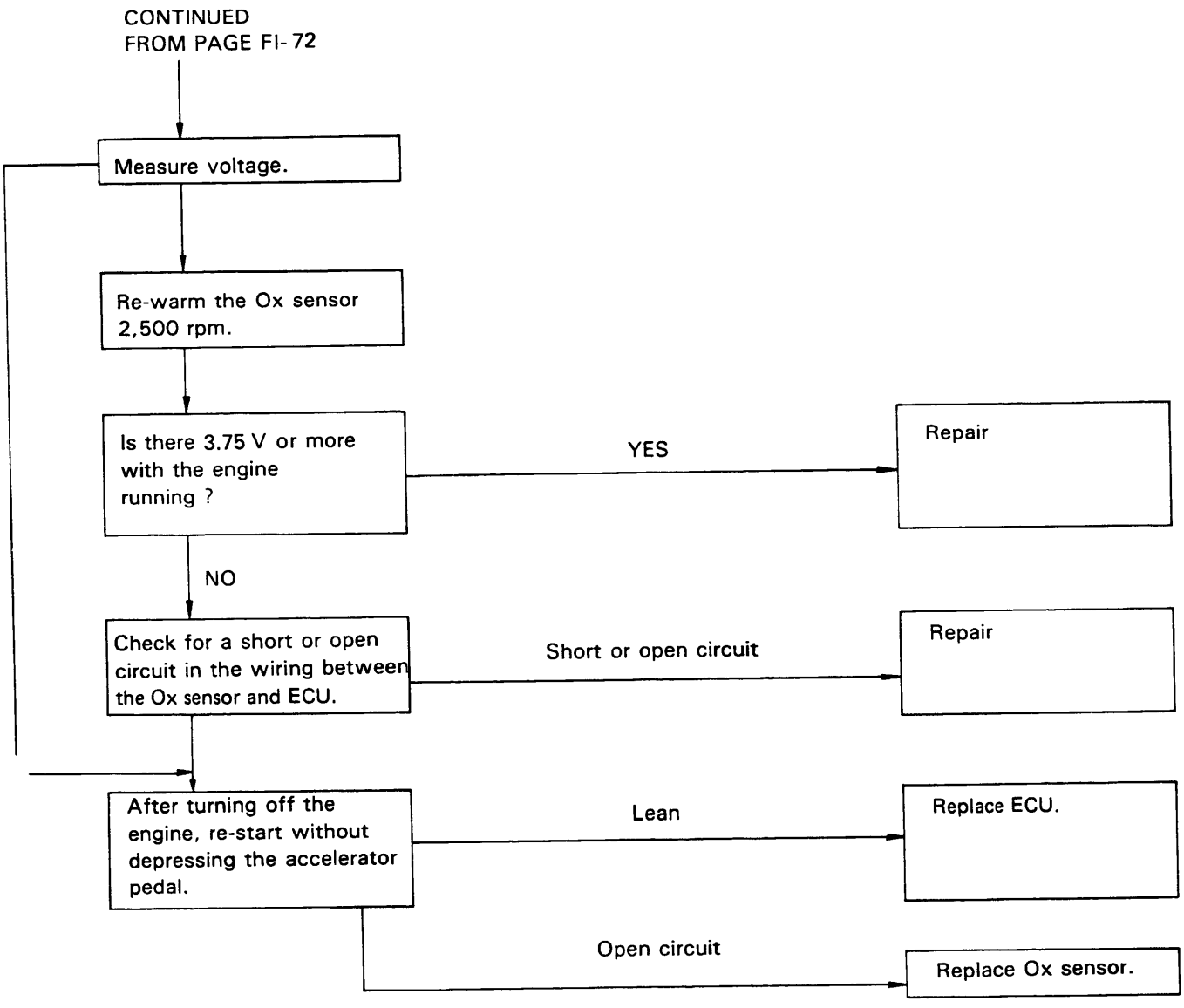
CONTINUED
FROM PAGE FI-72
Measure voltage.
Re-warm the Ox sensor 2,500 rpm.
Is there 3.75 V or more with the engine running ?
YES
Repair
NO
Check for a short or open circuit in the wiring between the Ox sensor and ECU.
Short or open circuit
Repair
After turning off the engine, re-start without depressing the accelerator pedal.
Lean
Replace ECU.
Open circuit
Replace Ox sensor.

ECU

INSPECTION OF ECU

1. MEASURE VOLTAGE OF ECU

NOTE:
1. The ECU itself cannot be checked directly.
2. The EFI circuit can be checked by measuring the resistance and voltage at the wiring connectors of the ECU.

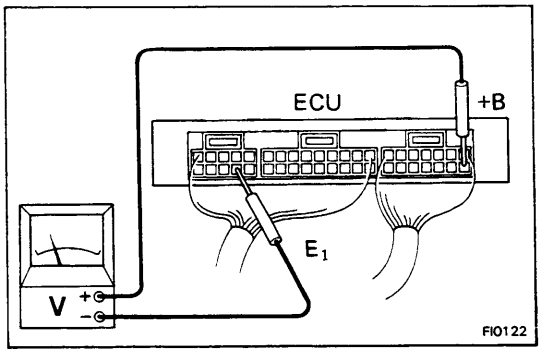

Check the voltages at the wiring connectors.

- Remove the right kick panel.
- Turn the igniton switch ON.
- Measure the voltage at each terminal.

NOTE: 1. Perform all voltage measurements with the connectors connected.
2. Verify that the battery voltage is 11V or above when the ignition switch is ON.

Voltage at ECU Wiring Connectors

Terminals	Condition		STD voltage
+B – E_1	Ignition switch ON		10 – 14
BATT – E_1	–		10 –14
IDL – E_2	Ignition switch ON	Throttle valve open	4 – 10
VTA – E_2		Throttle valve fully closed	0.1 – 1.0
		Throttle valve fully open	4 – 5
Vcc – E_2		–	4 – 6
IGt – E_1	Idling		0.7 – 1.0
STA – E_1	Ignition switch ST position		6 – 12
No. 10 – E_1 No. 20 – E_1	Ignition switch ON		9 – 14
W – E_1	No trouble (CHECK ENGINE light off) and engine running		8 – 14
Vc – E_2	Ignition switch ON	–	4 – 9
Vs – E_2		Measuring plate fully closed	0.5 – 2.5
		Measuring plate fully open	5 – 8
	Idling		2.5 – 7.5
THA – E_2	Ignition siwtch ON	Intake air temperature 20°C (68°F)	2 – 6
THW – E_2	Ignition switch ON	Coolant temperature 80°C (176°F)	0.5 – 2.5
B/K – E_1	Stop light switch ON		8 – 14

ECU Connectors

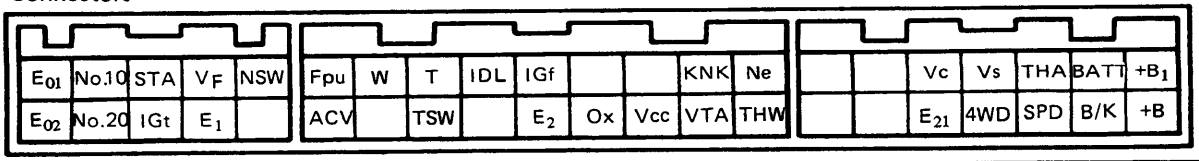

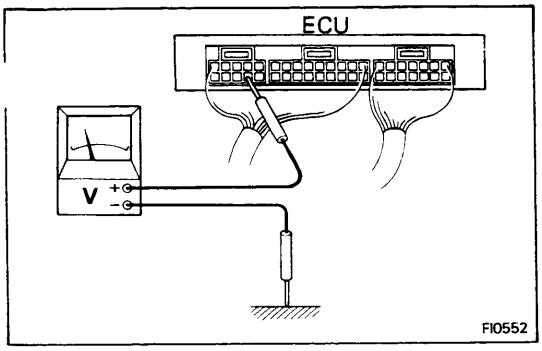

2. MEASURE RESISTANCE OF ECU

CAUTION:

1. **Do not touch the ECU terminals.**
2. **The tester probe should be inserted into wiring connector from the wiring side.**

Check the resistance between each terminal of the wiring connector.

- Remove the right kick panel.
- Unplug the wiring connectors from the ECU.
- Measure the resistance between each terminal of the wiring connectors.

Resistance at ECU Wiring Connectors

Terminals	Condition	Resistance (kΩ)
IDL – E_2	Throttle valve open	Infinity
	Throttle valve fully closed	0 – 0.1
VTA – E_2	Throttle valve fully open	3.3 – 10
	Throttle valve fully closed	0.2 – 0.8
V_{cc} – E_2	–	3 – 7
THA – E_2	Intake air temperature 20°C (68°F)	2 – 3
THW – E_2	Coolant temperature 80°C (176°F)	0.2 – 0.4
+B – E_2	–	0.2 – 0.4
V_c – E_2	–	0.1 – 0.3
V_s – E_2	Measuring plate fully closed	0.02 – 0.1
	Measuring plate fully open	0.02 – 1
Ne – E_1	–	0.14 – 0.18

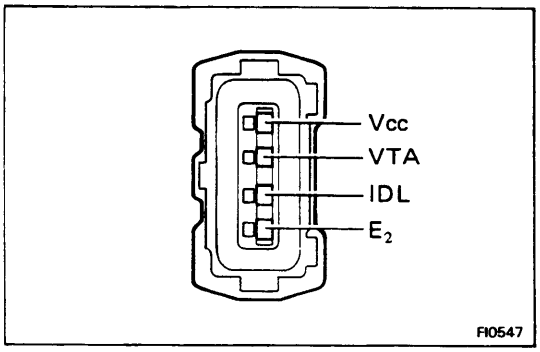

Fuel Cut RPM

INSPECTION OF FUEL CUT RPM

(a) Start and warm up the engine.

(b) Disconnect the throttle position sensor connector from the throttle position sensor.

(c) Short circuit termianls IDL and E_2 on wire connector side.

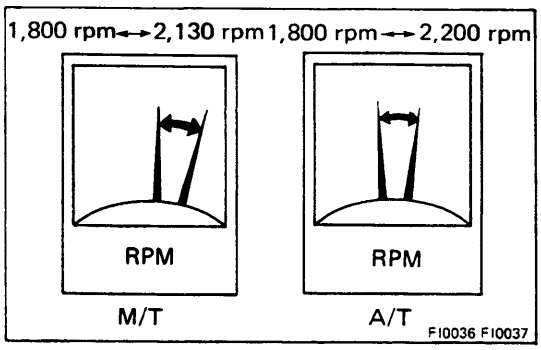

(d) Gradually raise the engine rpm and check that there is fluctuation between the fuel cut and fuel return points.

NOTE: The vehicle should be stopped.

	Fuel Cut rpm	Fuel Return rpm
M/T	2,130 rpm	1,800 rpm
A/T	2,200 rpm	1,800 rpm

FUEL SYSTEM

	Page
PRECAUTIONS	FU-2
TROUBLESHOOTING	FU-2
ON-VEHICLE INSPECTION	FU-3
CARBURETOR	FU-4
FUEL PUMP	FU-28

PRECAUTIONS

1. **Before working on the fuel system, disconnect the cat from the negative battery terminal.**
2. **When working on the fuel system, keep away from possible fire hazards and do not smoke.**
3. **Keep gasoline off rubber or leather parts.**
4. **Work on only one component group at a time to avoid confusion between similar looking parts.**
5. **Keep work area clean to avoid contamination of the carburetor and components.**
6. **Be careful not to mix up or lose clips or springs.**

TROUBLESHOOTING

Problem	Possible cause	Remedy	Page
Engine will not start/ Hard to start (cranks ok)	Carburetor problems • Choke operating • Flooding • Needle valve sticking or clogged • Vacuum hose disconnected or damaged • Fuel cut solenoid valve not open	Repair as necessary	FU-4
Rough idle or stalls	Carburetor problems • Idle speed incorrect • Slow jet clogged • Idle mixture incorrect • Fuel cut solenoid valve not open • Fast idle speed setting incorrect (cold engine) • Choke system faulty • Secondary throttle valve not closed	Perform on-vehicle inspection of carburetor	FU-3
Engine hesitates/ Poor acceleration	Fuel line clogged Carburetor problems • Float level too low • Accelerator pump faulty • Power valve faulty • Choke valve closed (hot engine) • Choke system	Check fuel line Repair as necessary	FU-4
Engine dieseling (runs after ignition switch is turned off)	Carburetor problems • Linkage sticking • Idle speed or fast idle speed out of adjustment • Fuel cut solenoid faulty	Repair as necessary	FU-4
Poor gasoline mileage	Fuel leak Carburetor problems • Choke faulty • Idle speed too high • Deceleration fuel cut system faulty • Power valve always open	Repair as necessary Perform on-vehicle inspection of carburetor	FU-3
Insufficient fuel supply to carburetor	Fuel filter clogged Fuel pump faulty Fuel line clogged Fuel line bent or kinked	Replace fuel filter Replace fuel pump Check fuel line Replace fuel line	FU-28 FU-30

ON-VEHICLE INSPECTION

1. **REMOVE AIR CLEANER (See page FU-5)**

2. **CHECK CARBURETOR AND LINKAGE**
   (a) Check that the various set screws, plugs and union bolts are tight and installed correctly.
   (b) Check the linkage for excessive wear and missing snap rings.
   (c) Check that the throttle valves open fully when the accelerator pedal is fully depressed.

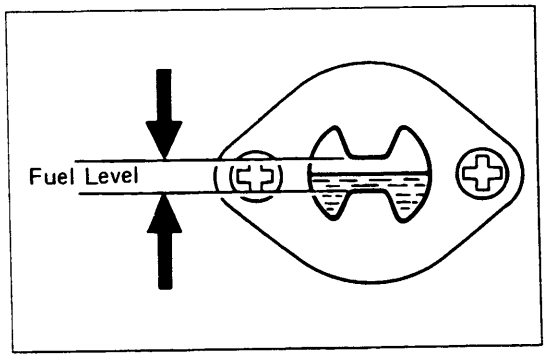

3. **CHECK FLOAT LEVEL**
   Check that the fuel level is about even with the correct level in the sight glass.
   If not, check the carburetor needle valve and float level, and adjust or repair, as necessary.

COLD ENGINE

4. **CHECK AUTOMATIC CHOKE (See page EC-55)**

5. **CHECK CHOKE OPENER (See page EC-58)**

6. **CHECK CHOKE BREAKER (See page EC-57)**

7. **CHECK AAP SYSTEM (See page EC-61)**

8. **CHECK OUTER VENT CONTROL VALVE**

HOT ENGINE

9. **CHECK AUTOMATIC CHOKE (See page EC-55)**

10. **CHECK CHOKE OPENER (See page EC-58)**

11. **CHECK AAP SYSTEM (See page EC-61)**

12. **CHECK ACCELERATION PUMP**
    Open the throttle valve, and check that gasoline spurts out from the acceleration nozzle.

13. **CHECK FUEL CUT SYSTEM (See page EC-63)**

14. **INSTALL AIR CLEANER (See page FU-24)**

15. **CHECK AND ADJUST THE IDLE SPEED (See page FU-24)**

16. **CHECK AND ADJUST FAST IDLE SPEED (See page FU-22)**

CARBURETOR

COMPONENTS

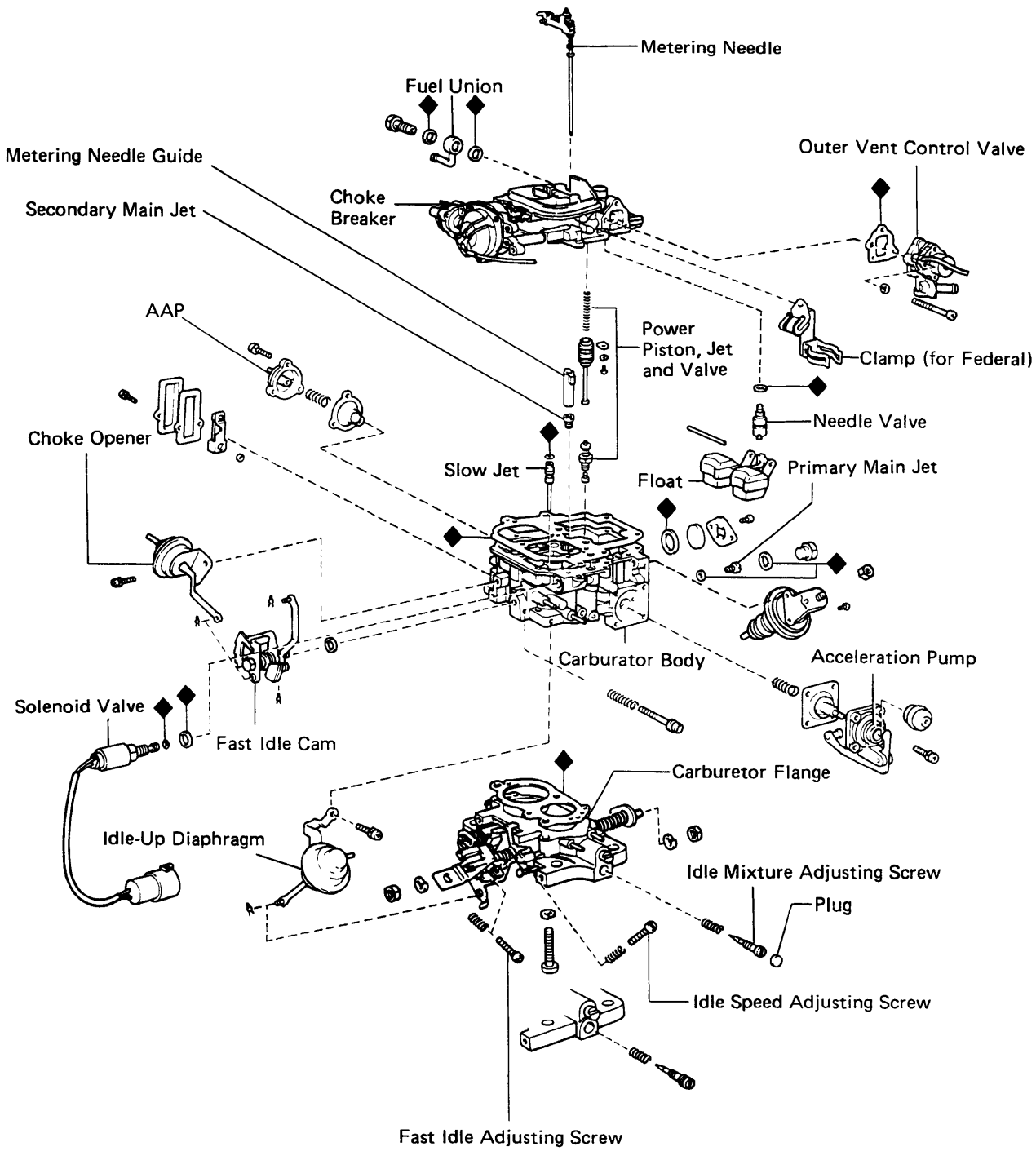

◆ : Non-reusable part

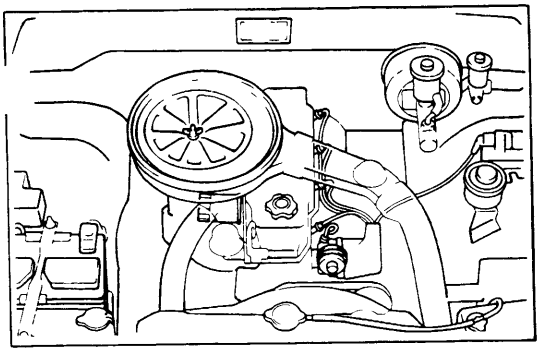

REMOVAL OF CARBURETOR

1. REMOVE AIR CLEANER

(a) Disconnect the emission control hoses.
(b) Disconnent the air intake hose.
(c) Remove the two mounting nuts and butterfly nut.
(d) Lift the air cleaner off the carburetor.

2. DISCONNECT THROTTLE CABLE FOR AUTOMATIC TRANSMISSION (See page AT-20)

3. DISCONNECT FOLLOWING HOSES FROM CARBURETOR

(a) Emission control hoses
(b) PCV hose from the flange
(c) Fuel hose
(d) Wiring connector

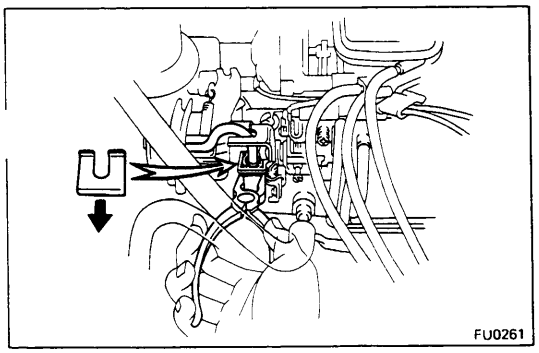

4. DISCONNECT ACCELERATOR LINKAGE

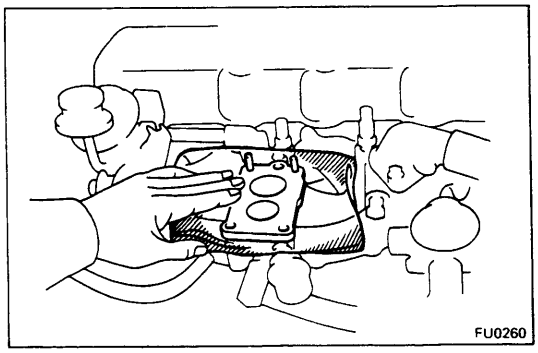

5. REMOVE CARBURETOR

(a) Remove the carburetor mounting bolts and nuts.
(b) Lift out the carburetor.
(c) Cover the inlet hole of the intake manifold with a cloth.

DISASSEMBLY OF CARBURETOR

(See page FU-4)

The following instructions are organized so that you work on only one component group at a time. This will help avoid confusion from similar looking parts from different sub-assemblies being on your workbench at the same time.

(a) To facilitate reassembly, arrange parts in order.

(b) Be careful not to mix up or lose clips or springs.

(c) Use SST (Carburetor Driver Set).

SST 09860-11011

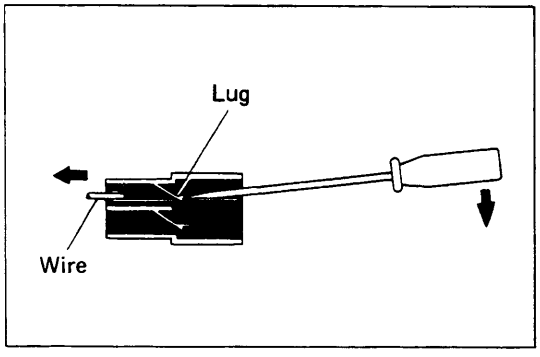

Disassembly of Air Horn

(See page FU-4)

1. DISCONNECT TERMINAL FROM CONNECTOR

Pry up the locking lugs with a screwdriver and pull out the terminals.

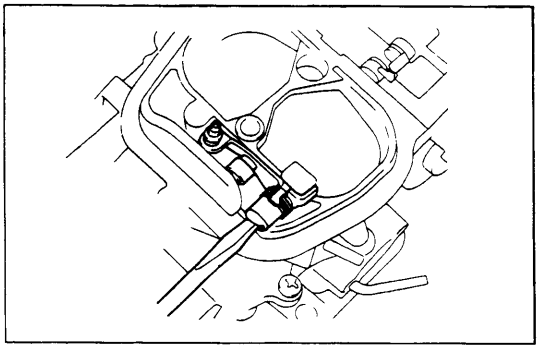

2. REMOVE METERING NEEDLE

Loosen the screw and remove the metering needle.

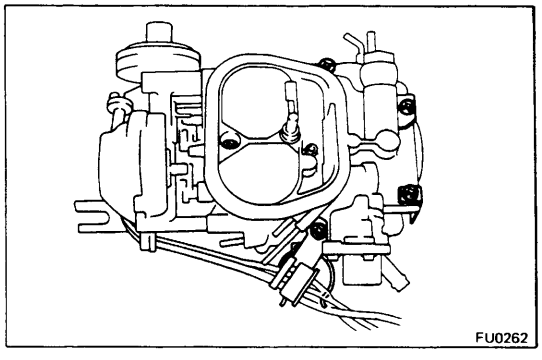

3. REMOVE AIR HORN ASSEMBLY

(a) Disconnect the fast idle link and air valve connecting rod.

(b) Remove the five air horn screws and lift the air horn from the body.

(c) Remove the air horn gasket.

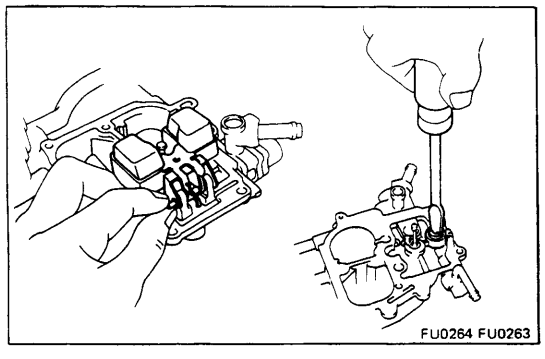

4. REMOVE FLOAT AND NEEDLE VALVE

(a) Remove the pivot pin and float with the needle valve.

(b) Remove the needle valve seat.

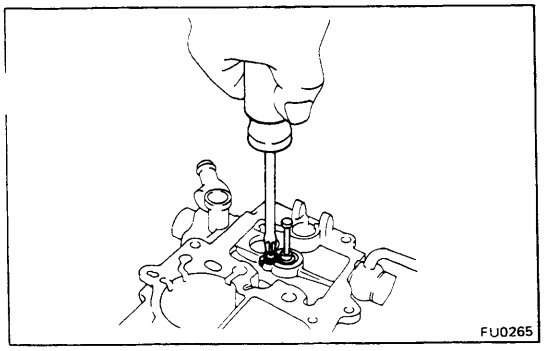

5. **REMOVE POWER PISTON**

(a) Loosen the retainer screw.

(b) While holding the piston, rotate the retainer.

(c) Remove the power piston and spring.

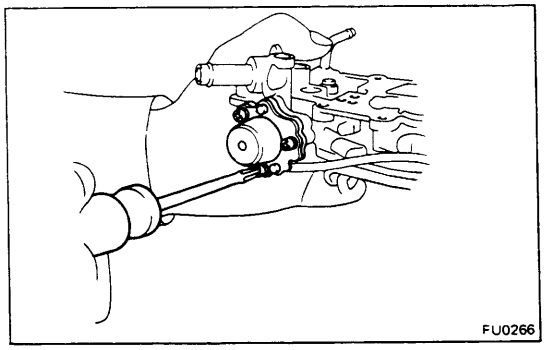

6. **REMOVE OUTER VENT CONTROL VALVE**

Loosen the three screws and remove the outer vent control valve.

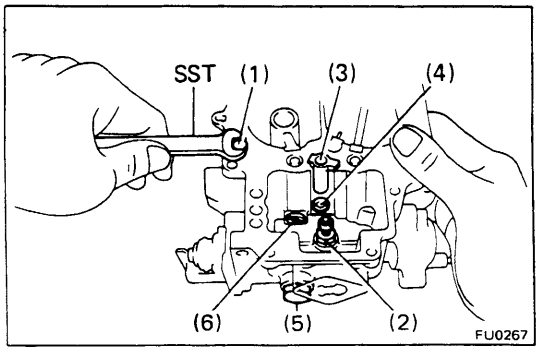

Disassembly of Carburetor Body

1. REMOVE DASH POT WITH BRACKET (FOR A/T)

2. REMOVE JETS AND POWER VALVE

(a) Using SST, remove the slow jet (1).

SST 09922-00010

(b) Remove the power valve with jet (2).

(c) Remove the metering needle guide (3) and secondary main jet (4).

(d) Remove the plug (5) and primary main jet (6).

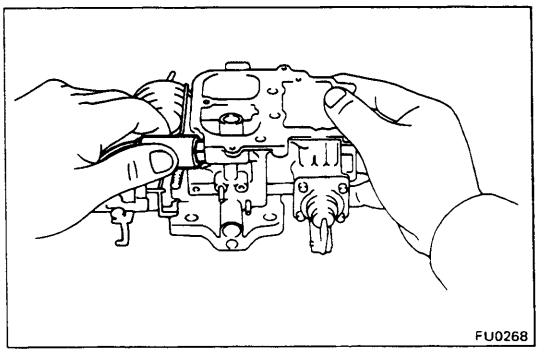

3. REMOVE FUEL CUT SOLENOID VALVE

Remove the solenoid valve from the carburetor body.

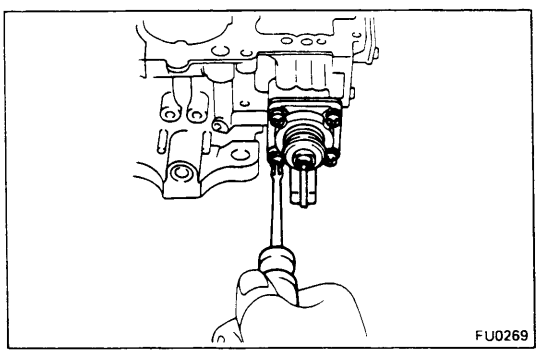

4. REMOVE ACCELERATION PUMP

Remove the four screws, pump housing, diaphragm and spring.

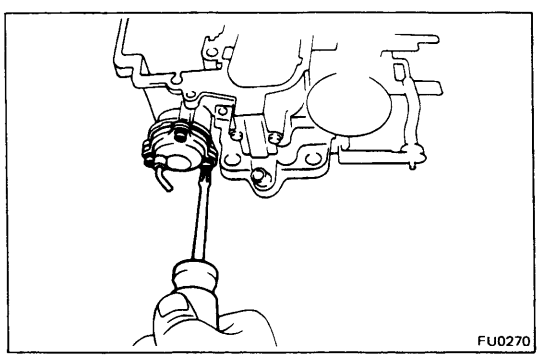

5. REMOVE AUXILIARY ACCELERATION PUMP

Remove the three screws, pump housing, spring and diaphragm.

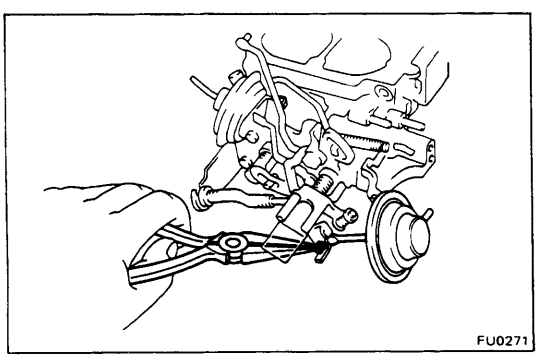

6. REMOVE IDLE-UP DIAPHRAGM

(a) Disconnect the idle up diaphragm link.

(b) Remove the idle up diaphragm.

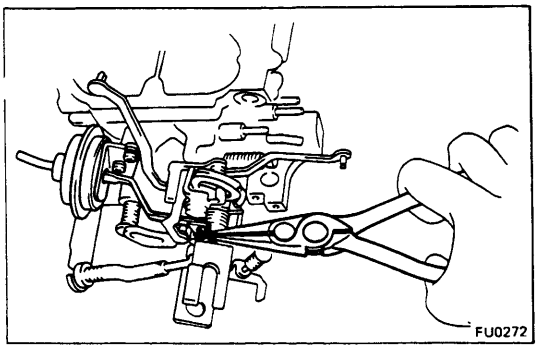

7. REMOVE CHOKE OPENER

(a) Disconnect the choke opener link.

(b) Remove the choke opener.

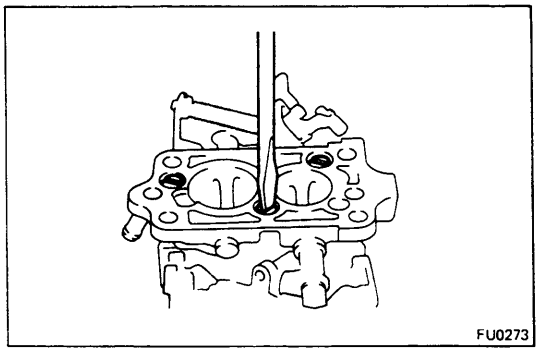

8. SEPARATE BODY AND FLANGE

(a) Remove the three screws.

(b) Separate the body and flange.

GENERAL CLEANING PROCEDURE

CLEAN DISASSEMBLED PARTS BEFORE INSPECTION

(a) Wash and clean the cast parts with a soft brush and carburetor cleaner.

(b) Clean off the carbon around the throttle valve.

(c) Wash the other parts thoroughly in carburetor cleaner.

(d) Blow all dirt and other foreign matter from the jets, fuel passages and restrictions in the body.

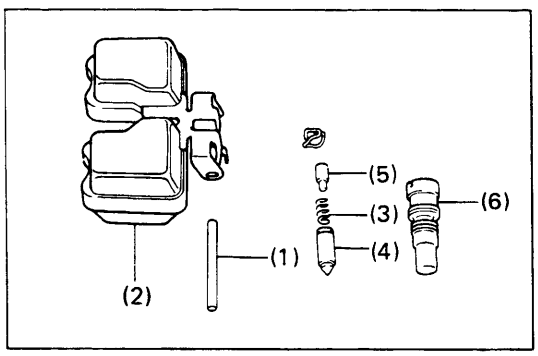

INSPECTION OF CARBURETOR

1. INSPECT FLOAT AND NEEDLE VALVE

(a) Inspect the pivot pin (1) for scratches and excessive wear.

(b) Inspect the float (2) for broken lip or wear in the pivot pin holes.

(c) Inspect the spring (3) for breaks or deformation.

(d) Inspect the needle valve (4) and plunger (5) for wear or damage.

(e) Inspect the strainer (6) for rust or breaks.

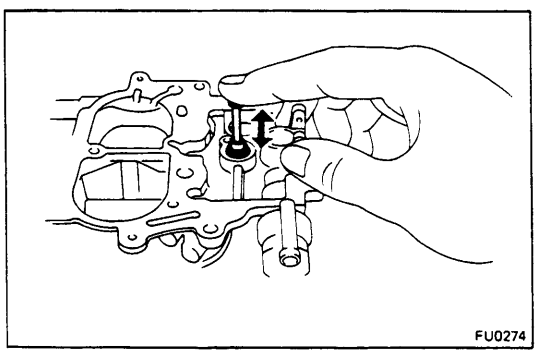

2. INSPECT POWER PISTON

Make sure that power piston moves smoothly.

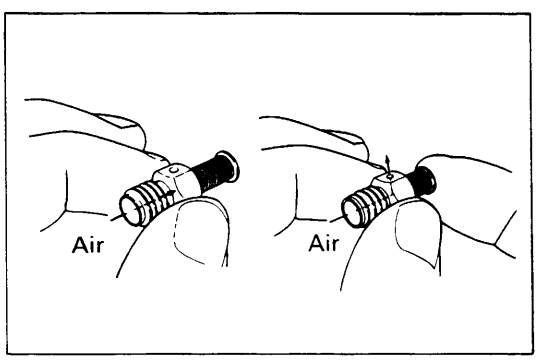

3. INSPECT POWER VALVE

Check for faulty opening and closing action.

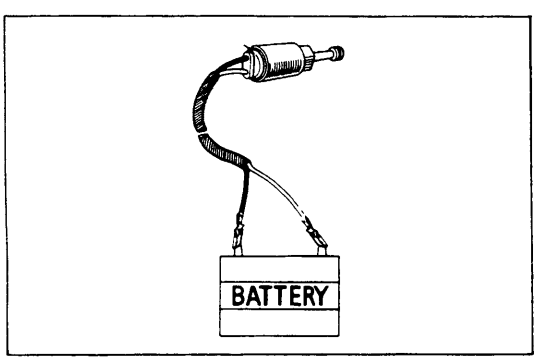

4. INSPECT FUEL CUT SOLENOID VALVE

(a) Connect the terminals to the battery terminals.

(b) You should feel a click from the solenoid valve when the battery power is connected and disconnected.

If the solenoid valve is not operating properly, replace it.

(c) Replace the O-ring.

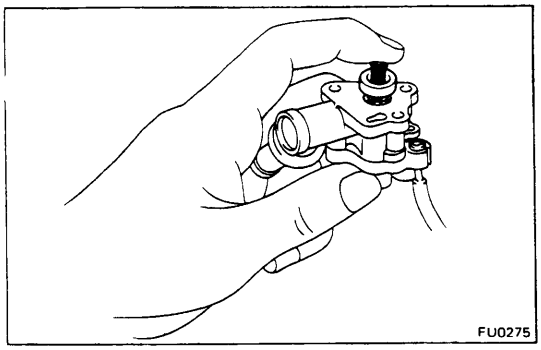

5. INSPECT OUTER VENT CONTROL VALVE

(a) Check the valve and valve seats for damage.

(b) Check that the valve rod moves smoothly.

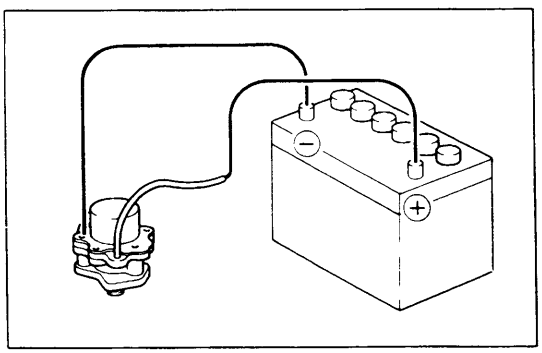

(c) Connect the terminal to the battery terminal.

(d) You should feel a click from the control valve when battery power is connected and disconnected.

If the control valve is not operating properly, replace it.

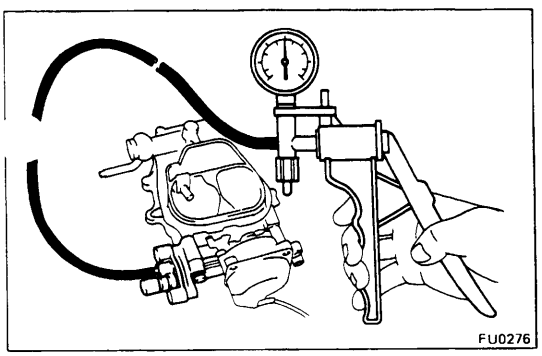

6. INSPECT CHOKE BREAKER DIAPHRAGM

(a) Apply vacuum to the diaphragm.

(b) Check that the vacuum does not drop immediately.

(c) Check that the choke valve opens slightly when vacuum is applied.

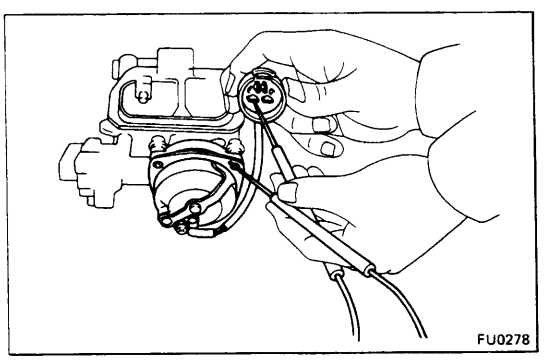

7. INSPECT CHOKE HEATER

Using an ohmmeter, measure the resistance, between the terminal and heater housing.

Resistance: 20 — 22Ω at 20°C (68°F)

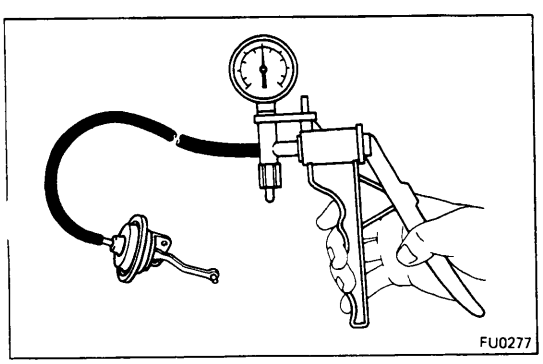

8. INSPECT CHOKE OPENER DIAPHRAGM

(a) Apply vacuum to the diaphragm.

(b) Check that the vacuum does not drop immediately.

(c) Check that the link moves when vacuum is applied.

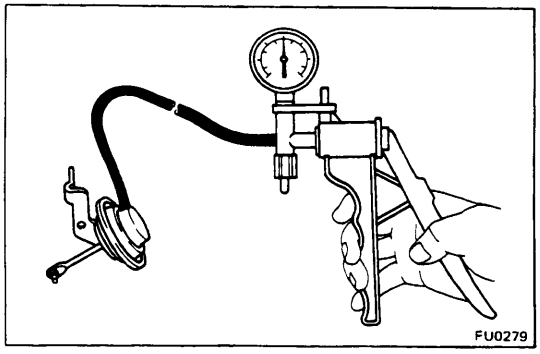

9. INSPECT IDLE-UP DIAPHRAGM

(a) Apply vacuum to the diaphragm.

(b) Check that the vacuum does not drop immediately.

(c) Check that the link moves when vacuum is applied.

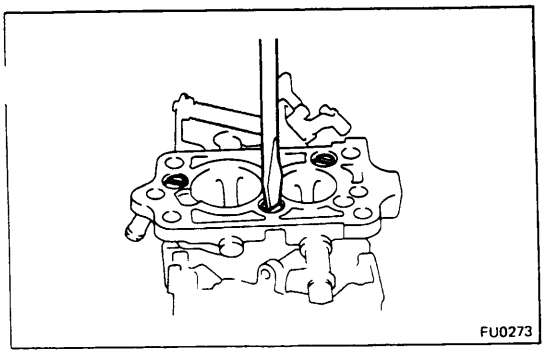

ASSEMBLY OF CARBURETOR

NOTE: Use new gaskets and O-rings throughout.

Assembly of Carburetor Body

(See page FU-4)

1. ASSEMBLE CARBURETOR BODY AND FLANGE

(a) Place a new gasket and flange in position on the body.

(b) Install the three screws.

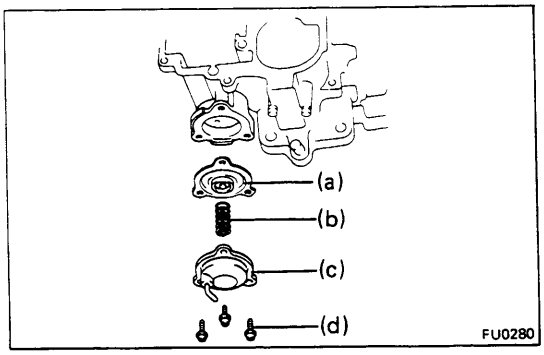

2. INSTALL AUXILIARY ACCELERATION PUMP IN ORDER, AS SHOWN:

(a) Diaphragm (with outer gasket)

(b) Spring

(c) Cover

(d) Screws

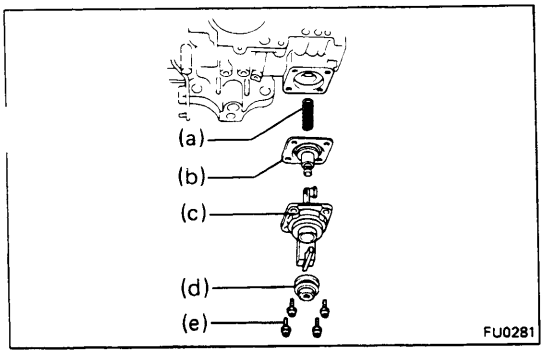

3. INSTALL ACCELERATION PUMP IN ORDER AS SHOWN:

(a) Spring

(b) Diaphragm (with outer gasket)

(c) Cover

(d) Boot

(e) Screws

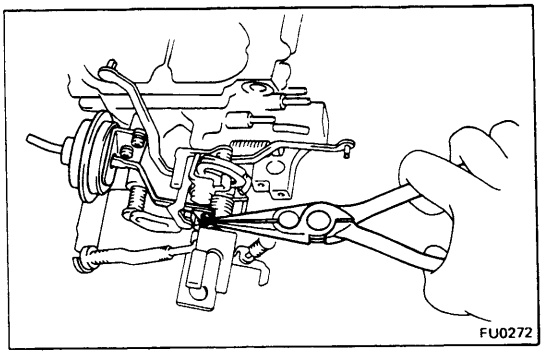

4. INSTALL CHOKE OPENER

Install the choke opener, and connect the link.

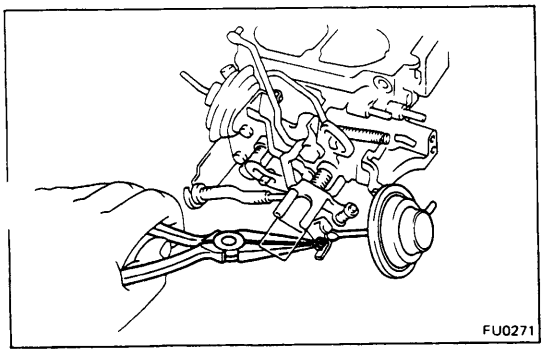

5. INSTALL IDLE-UP DIAPHRAGM

Install the idle-up diaphragm, and connect the link.

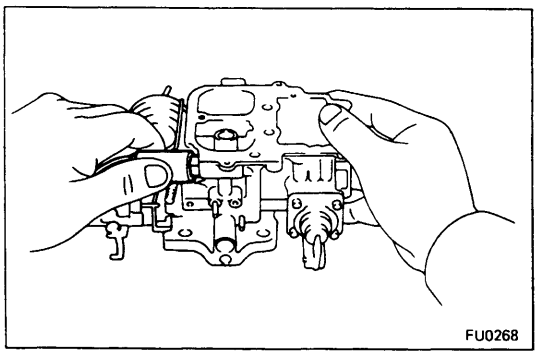

6. INSTALL FUEL CUT SOLENOID VALVE

Install the solenoid valve with a new gasket into the carburetor body.

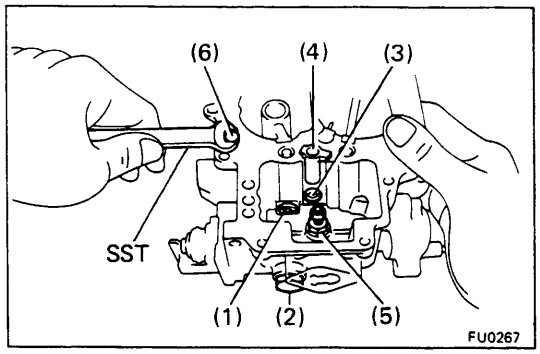

7. INSTALL MAIN JETS, SLOW JET AND POWER VALVE

(a) Install the primary main jet (1) over a new gasket.

(b) Install the plug (2) over a new gasket.

(c) Install the secondary main jet (3) and metering needle guide (4).

(d) Install the power valve (5).

(e) Assemble a new O-ring on the slow jet.

(f) Using SST, install the slow jet (6).

SST 09922-00010

8. INSTALL DASH POT WITH BRACKET (FOR A/T)

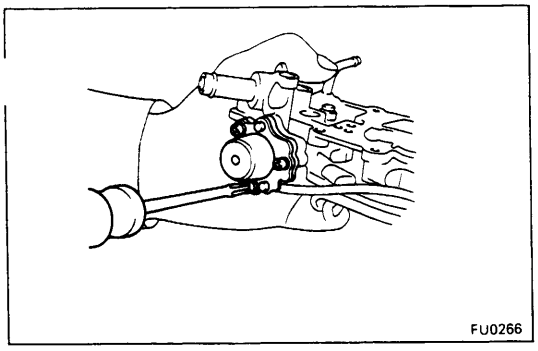
FU0266

Assembly of Air Horn

(See page FU-4)

1. INSTALL OUTER VENT CONTROL VALVE

(a) Place a new gasket in position on the air horn.

(b) Install the outer vent control valve on the air horn with the three screws.

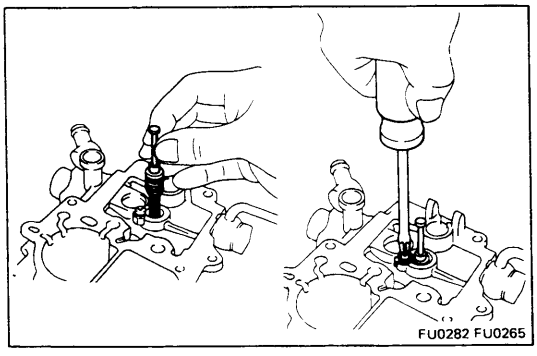
FU0282 FU0265

2. INSTALL POWER PISTON

(a) Place the power piston spring and piston into the bore.

(b) While pushing the piston, rotate the retainer over the piston.

(c) Tighten the retainer screw.

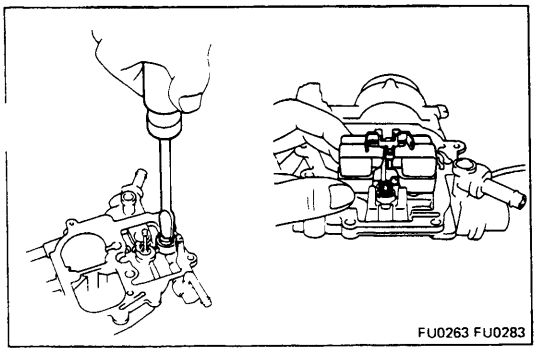
FU0263 FU0283

3. INSTALL FLOAT AND NEEDLE VALVE

(a) Install the valve seat over a new gasket into the fuel inlet.

(b) Install the needle valve onto the valve seat.

(c) Insert the lip of the float under the wire of the needle valve.

(d) Install the float and secure it with the pivot pin.

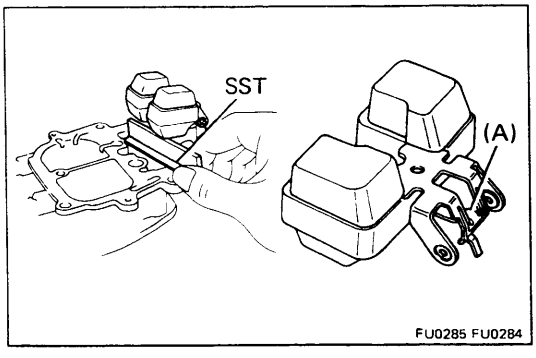

FU0285 FU0284

4. ADJUST FLOAT LEVEL

(a) Allow the float to hang down by its own weight. Using SST, check the clearance between the float top and air horn.

SST 09240-00014

NOTE: This measurement should be made without a gasket on the air horn.

Float level (raised position): 9.8 mm (0.386 in.)

(b) Adjust by bending portion (A) of the float.

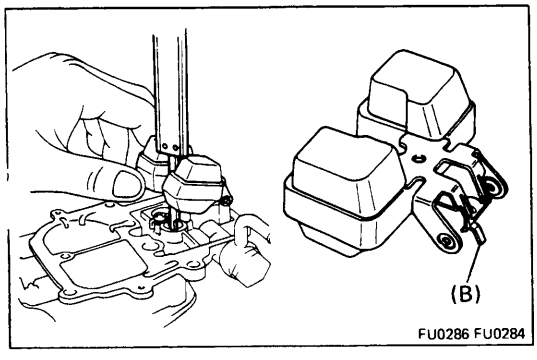

FU0286 FU0284

(c) Lift up the float and, using vernier calipers, check the distance between the air horn and the float bottom.

Float level (lowered position): 48 mm (1.89 in.)

(d) Adjust by bending portion (B) of the float.

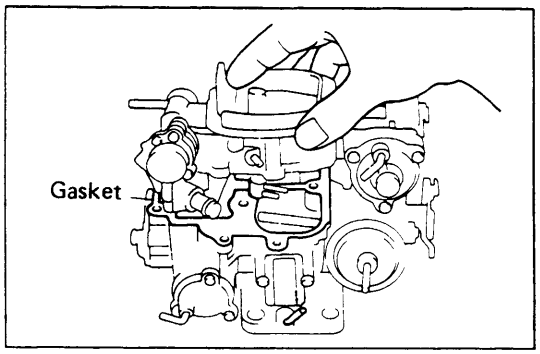

5. ASSEMBLE AIR HORN AND BODY

(a) Put a new gasket on the body.

(b) Carefully assemble the air horn and body.

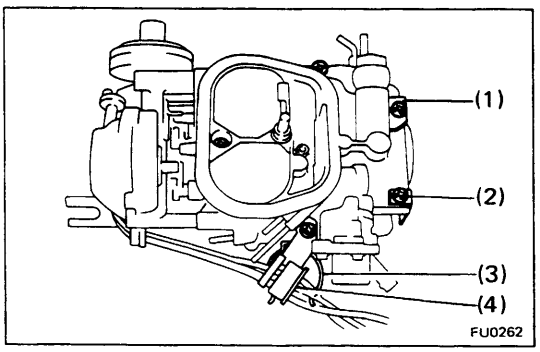

6. INSTALL FIVE SCREWS WITH OTHER PARTS AS FOLLOWS:

(a) Install the fuel inlet bracket (1).

(b) Instal the number plate (2).

(c) Install the VCV clamp (3) and wire clamp (4).

(d) Connect the fast idle link.

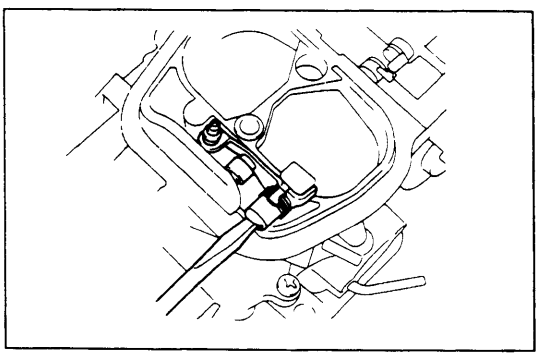

7. INSTALL METERING NEEDLE

(a) Install the metering needle with a collar.

(b) Hook the spring end into the hole.

(c) Insert a washer and tighten the screw.

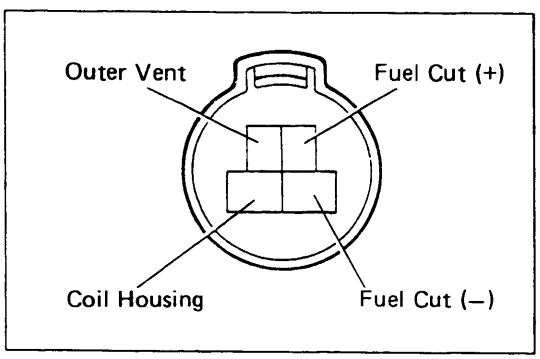

8. INSTALL TERMINAL TO CONNECTOR

(a) Push in the terminal until it is securely locked in the connector lug.

(b) Pull on the wire to confirm that it is securely locked.

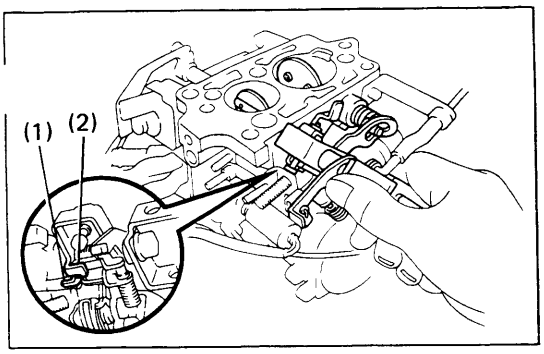

ADJUSTMENT OF CARBURETOR

NOTE: Use SST 09240-00014 to make adjustment.

1. CHECK AND ADJUST THROTTLE VALVE OPENING

Check the full opening angle of the primary and secondary throttle valves.

Adjust by bending the respective first throttle arm levers for the primary (1) and secondary (2).

Standard angle:
Primary — 90° from horizontal plane
Secondary — 90° from horizontal plane

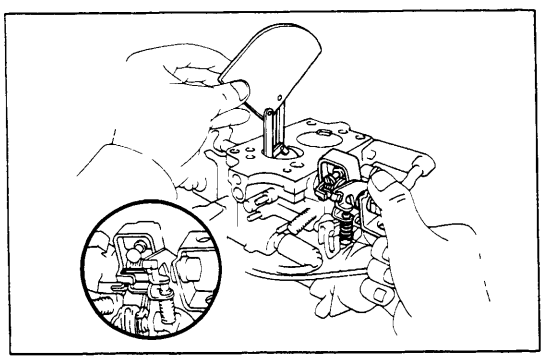

2. CHECK SECONDARY TOUCH ANGLE

Check the primary throttle valve opening at the same time the second throttle valve just starts to open.

Standard angle: 59° from horizontal plane

NOTE: It is not necessary to adjust the secondary touch angle.

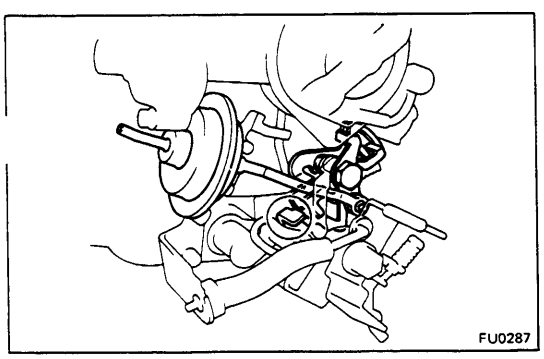

3. CHECK AND ADJUST FAST IDLE SETTING

(a) Set the throttle shaft lever to the first step of the fast idle cam as shown.

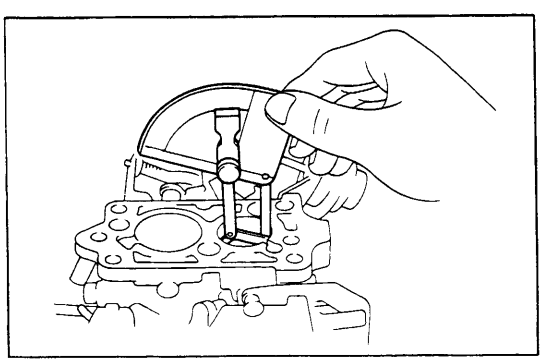

(b) With the choke valve fully closed, check the primary throttle valve angle.

Adjust by turning the fast idle adjusting screw.

Standard angle: 23° from horizontal plane

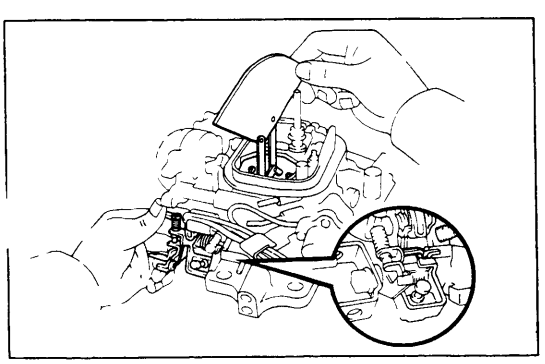

4. CHECK AND ADJUST UNLOADER

With the primary throttle valve fully opened, check the choke valve angle. Adjust by bending the primary throttle arm.

Standard angle: 45° from horizontal plane

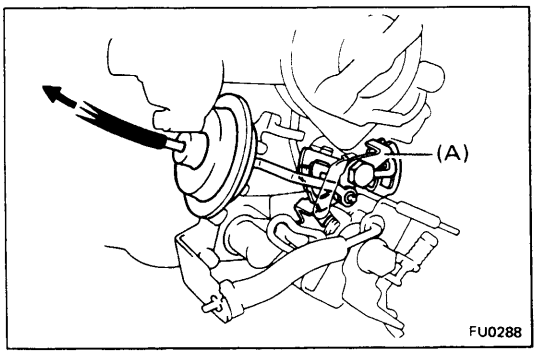

5. CHECK AND ADJUST CHOKE OPENER

(a) Apply vacuum to the choke opener diaphragm.

(b) Check that the fast idle cam is released to the four step. Adjust by bending choke opener lever A.

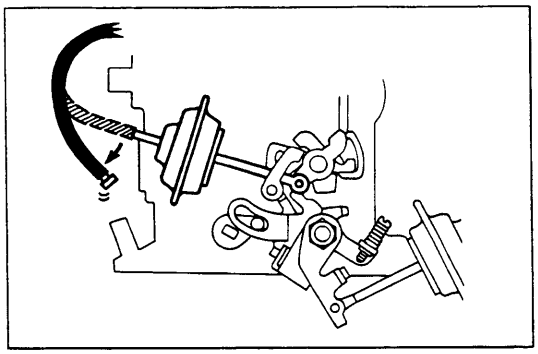

(c) Disconnect the vacuum hose.

(d) Close the choke valve and set the fast idle lever to the first step.

(e) Check that there is clearance between the choke opener lever and fast idle cam.

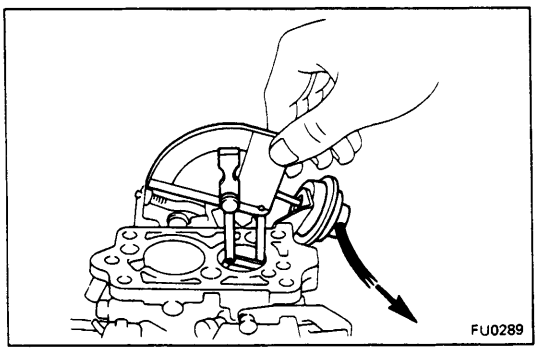

6. CHECK AND ADJUST IDLE-UP

(a) Apply vacuum to the idle-up diaphragm.

(b) Check the throttle valve opening angle. Adjust by turning the adjusting screw.

Standard angle: 16.5° from horizontal plane

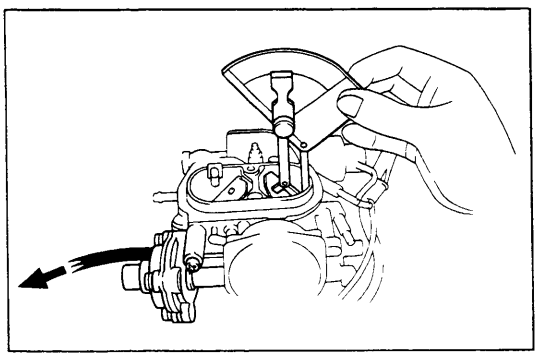

7. CHECK CHOKE BREAKER

(a) Apply vacuum to the choke breaker diaphragm.

(b) Close the choke valve by hand.

(c) Check the choke valve opening angle.

Standard angle: 42° from horizontal plane

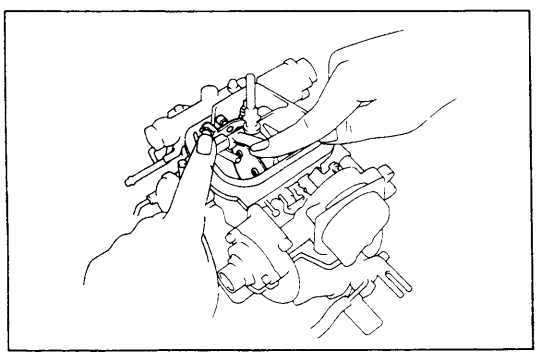

8. CHECK AIR VALVE AND METERING NEEDLE

(a) Check that the air valve and metering needle move smoothly together.

(b) While the primary throttle valve angle is idle position, check the air valve opening angle.

(c) While the primary throttle valve is full opening ang check that there is clearance between the connecting rod and stopper.

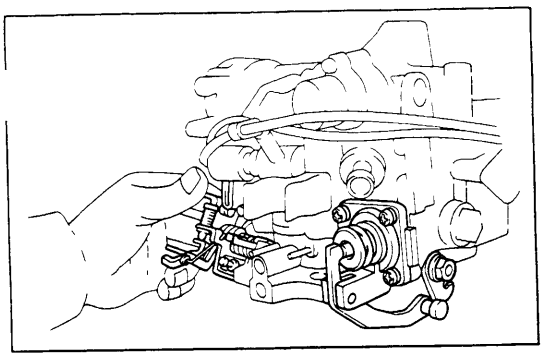

9. CHECK ACCELERATION PUMP

Rotate the throttle shaft and check that the pump lever and diaphragm rod move smoothly.

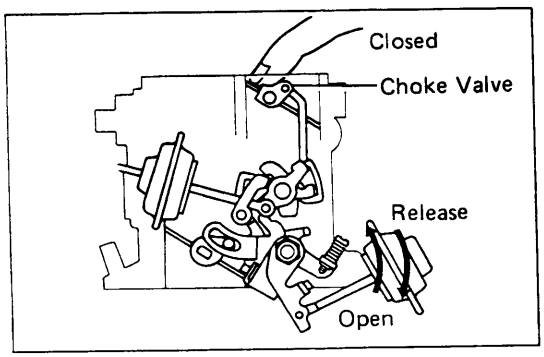

10. INSPECT AND ADJUST SECONDARY THROTTLE VALVE LOCK SYSTEM

(a) While holding the throttle slightly open, push the choke valve closed, and hold it closed as you release the throttle valve.

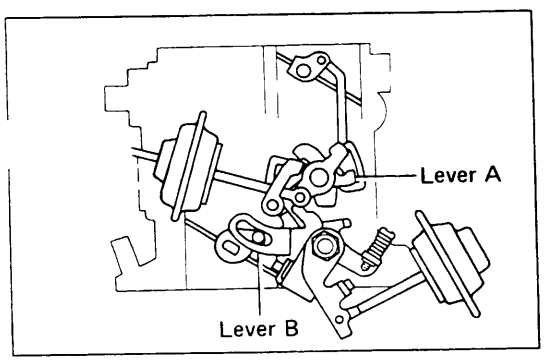

(b) In condition (a), check that lever A is holding lever B locked as shown.

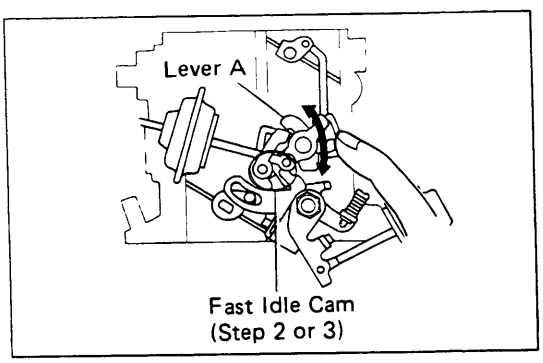

(c) Check that the lever A moves smoothly at step 2 or 3 of the fast idle cam. Adjust by bending the top of lever A.

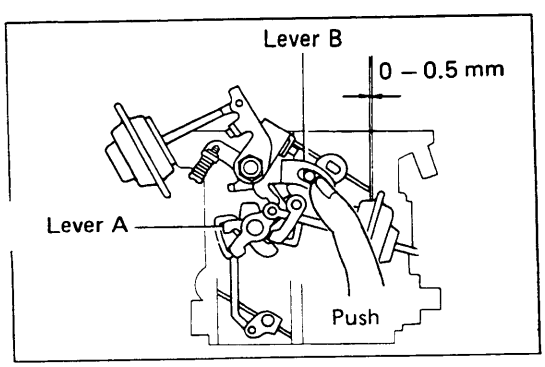

(d) In condition (a), rotate lever B to where it makes contact with lever A. In this position, measure the clearance between the secondary valve and bore. Adjust by bending the top of lever A.

Standard clearance: 0 — 0.5 mm (0 — 0.020 in.)

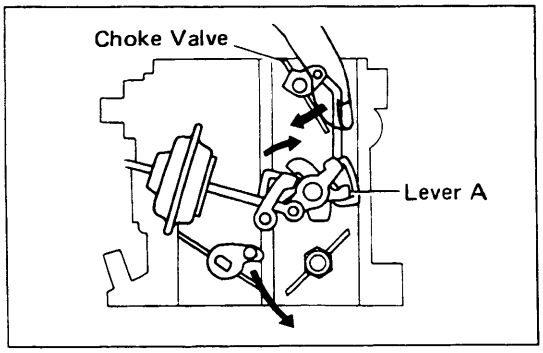

(e) With the choke valve opened (above 52°), check that lever A unlocks when the throttle valve is opened.

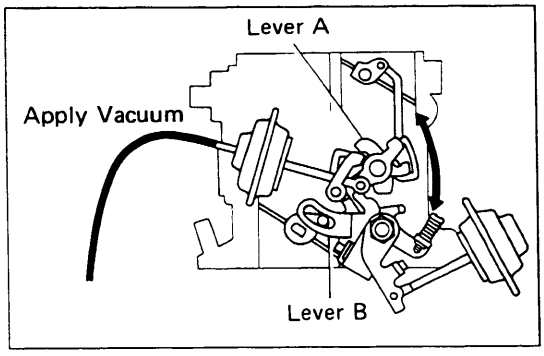

(f) Repeat step (a).

(g) Apply vacuum to the choke opener and check that lever A withdraws and that lever B unlocks.

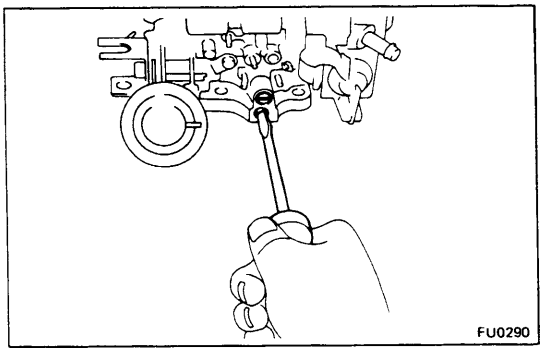

11. PRESET IDLE MIXTURE ADJUSTING SCREW

If the idle mixture adjusting screw plug has been removed, fully screw in the idle mixture screw and then unscrew it to the following amount.

Standard: Return 3 1/2 turns from fully closed position

CAUTION: Use care not to screw it in too tightly and damage the screw tip.

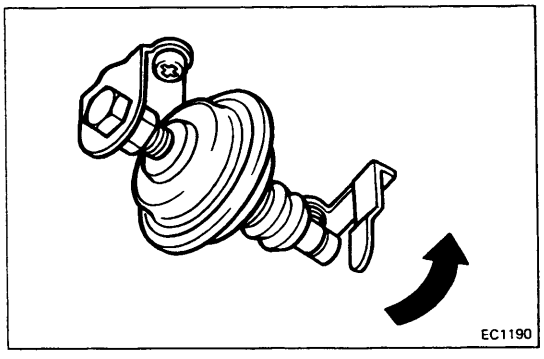

12. CHECK AND ADJUST DASH POT

(a) Open the throttle valve untill the throttle lever separates from the dash pot end.

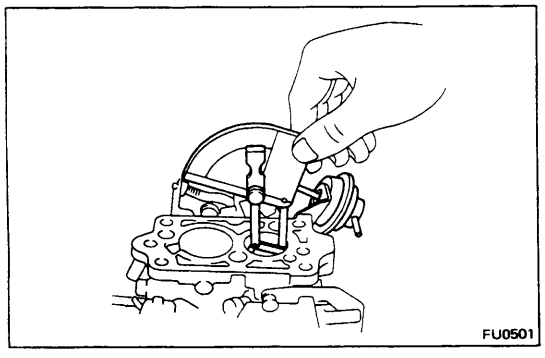

(b) Release the throttle valve gradually, and check the dash pot touch angle when the throttle lever touches the dash pot end.

Standard angle: 24.5° from horizontal plane

If the dash pot touch angle is not as specified, unlock the lock nut, and adjust the dash pot touch angle by turnir the dash pot diaphragm.

INSTALLATION OF CARBURETOR

1. **INSTALL CARBURETOR**
   (a) Place the insulator on the intake manifold.
   (b) Install the carburetor.Tighten the bolts and nuts securely.

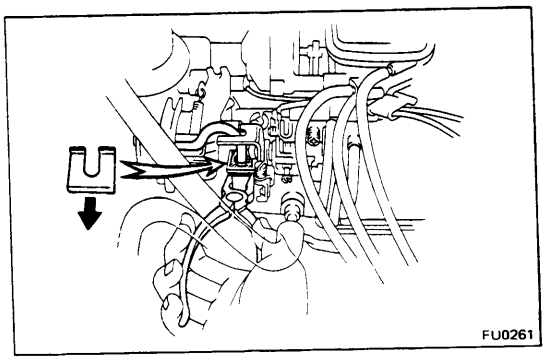

2. **CONNECT ACCELERATOR LINKAGE**
   Connect the linkage and install the clip.

3. **CONNECT THROTTLE CABLE FOR AUTOMATIC TRANSMISSION (See page AT-20)**

4. **CONNECT FOLLOWING HOSES TO CARBURETOR:**
   (a) Fuel inlet hose
   (b) PCV hose
   (c) Emission control hoses (see system layout in the emission control section or the layout printed under the hood)
   (d) Wiring connector

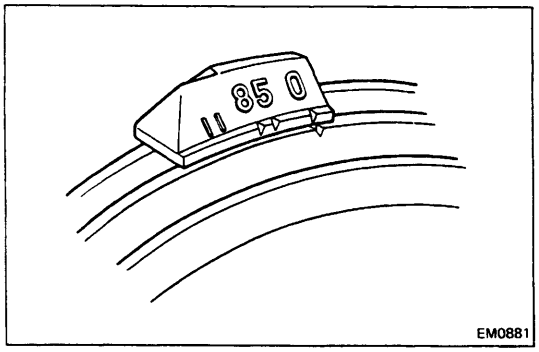

ADJUSTMENT OF CARBRETOR (ON-VEHICLE)

1. INITIAL CONDITIONS OF CARBURETOR ADJUSTMENT

(a) All accessories switched off

(b) Ignition timing set correctly

(c) Transmission in N range

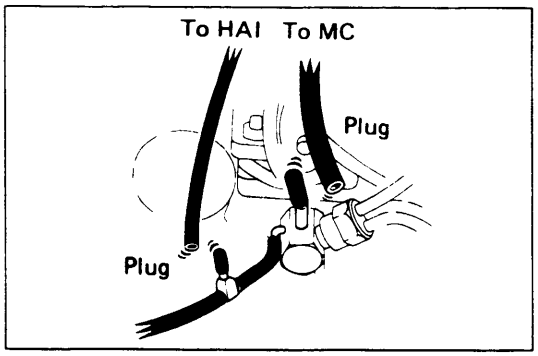

2. START ENGINE

Start the engine and warm it up to normal operating temperature.

NOTE: Plug the hose connections for HAI and MC (for M/T) systems to prevent rough idling.

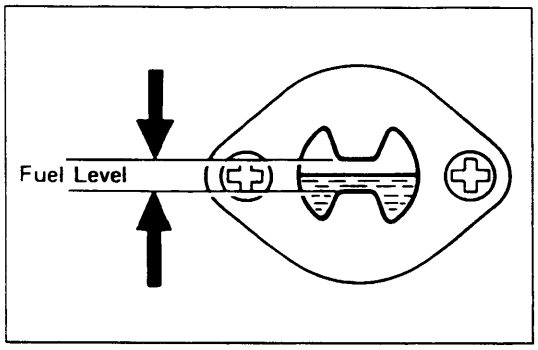

3. CHECK FLOAT LEVEL

Fuel level should be about even with the correct level in the sight glass.

4. CHECK THAT CHOKE VALVE OPENS FULLY

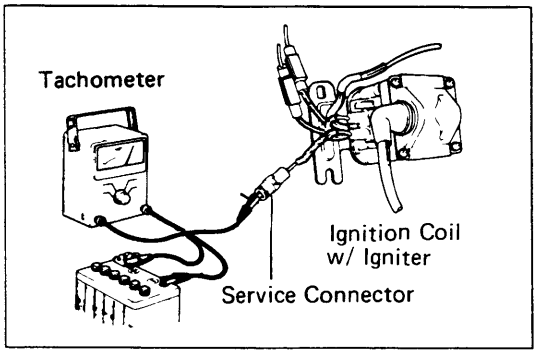

5. CONNECT TACHOMETER

Connect the tachometer test probe to the ignition coil negative terminal.

CAUTION:

1. **NEVER allow the ignition coil terminals to touch ground as it could result in damage to the igniter and/or ignition coil.**
2. **As some tachometers are not compatible with this ignition system, it is recommended that you consult with the manufacturer.**

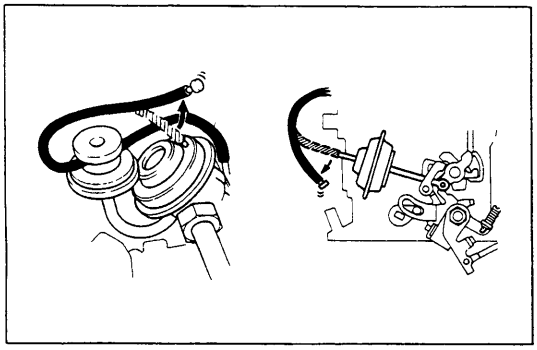

6. ADJUST FAST IDLE SPEED

(a) Disconnect the vacuum hose from the choke opener diaphragm and EGR valve, and plug the hose end.

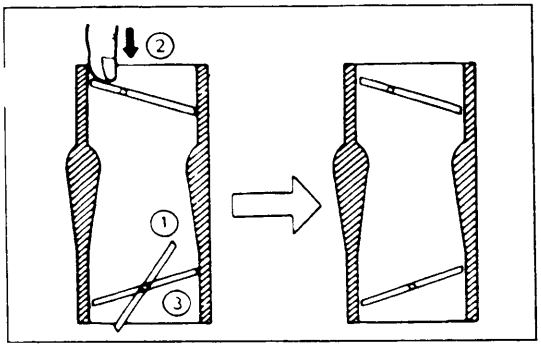

(b) Set the fast idle cam.
While holding the throttle valve slightly open, push the choke valve closed and hold it closed as you release the throttle valve.

(c) Start the engine, but do NOT depress the accelerator pedal.

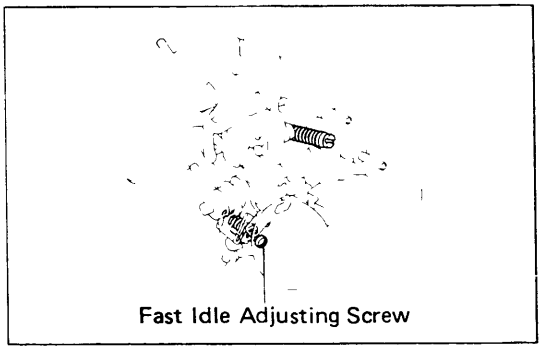
Fast Idle Adjusting Screw

(d) Adjust the fast idle speed by turning the fast idle adjusting screw.

Fast idle speed: 2,600rpm

(e) Reconnect the vacuum hoses to the proper locations.

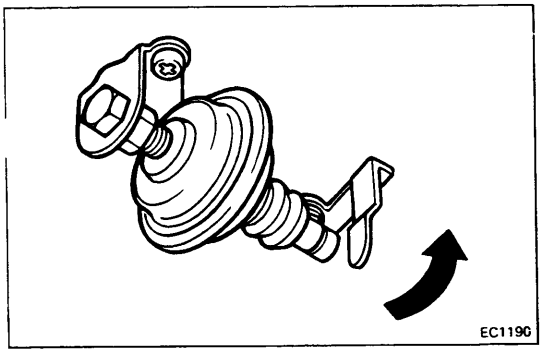

7. CHECK DASH POT SETTING SPEED

(a) Open the throttle valve until the throttle lever separates from the dash pot end.

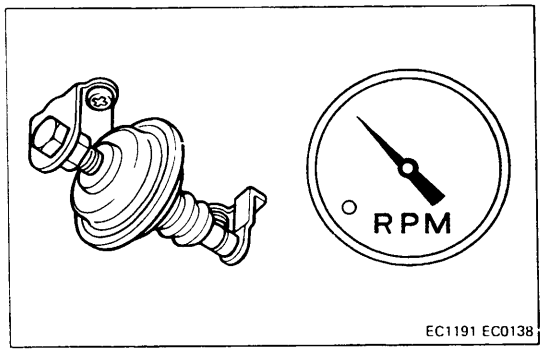

(b) Release the throttle valve gradually, and check the dash pot setting speed when the throttle lever touches the dash pot end.

Dash pot setting speed: 3,000 rpm

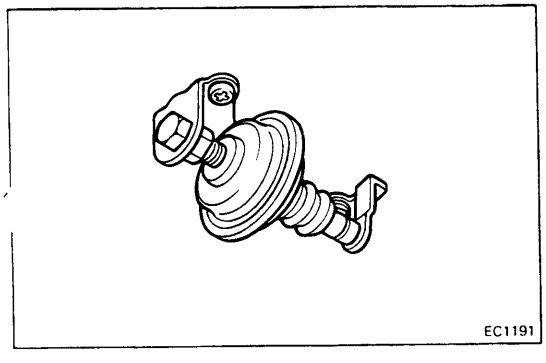

If the speed is not as specified, unlock the lock nut, and adjust the setting speed by turning the dash pot diaphragm.

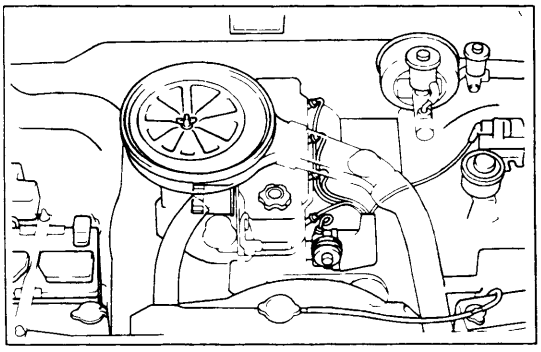

8. STOP ENGINE

9. INSTALL AIR CLEANER

(a) Place the air cleaner in position and install the two mounting nuts and butterfly nut.

(b) Connect the air intake hoses.

(c) Connect the emission control hoses.

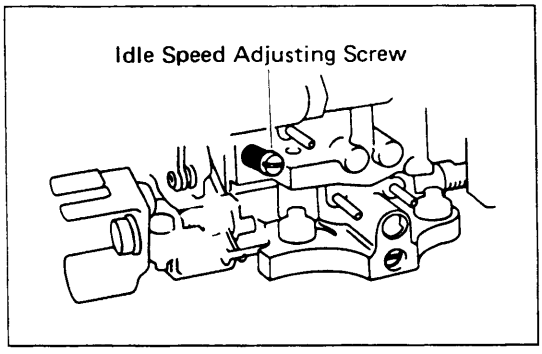

10. ADJUST IDLE SPEED

Adjust the idle speed by turning the idle speed adjusting screw.

Idle speed: 700 rpm M/T
750 rpm A/T

11. IF NECESSARY, ADJUST IDLE MIXTURE
(See page FU-25)

12. REMOVE TACHOMETER

Idle Mixture

ADJUSTMENT OF IDLE MIXTURE

NOTE:

- To conform with regulations, the idle mixture adjusting screw is adjusted and plugged with a steel plug by the manufacturer.
  Normally, this steel plug should not be removed.
- When troubleshooting rough idle, check all other possible causes before attempting to adjust the idle mixture.
  (See TROUBLESHOOTING on page FU-2)
  Only if no other factors are found to be at fault, should the idle mixture be adjusted and, when doing so, remove the plug and follow the procedure described below.

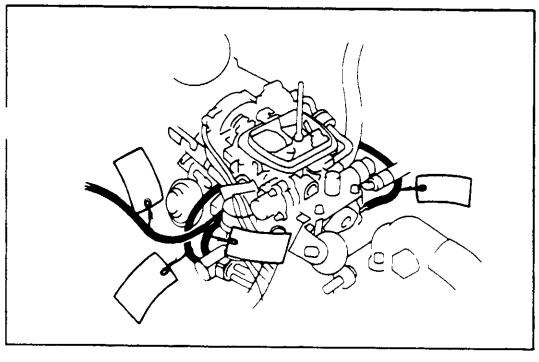

1. REMOVE CARBURETOR

(a) Before disconnecting the vacuum hoses, use tags to identify how they should be reconnected.

(b) Remove the carburetor from the engine.

(c) After removing the carburetor, cover the intake manifold with a clean rag.

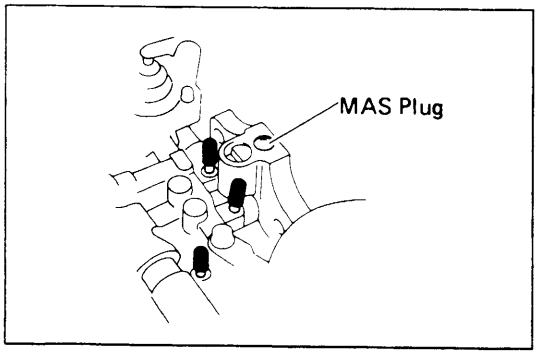

2. REMOVE MIXTURE ADJUSTING SCREW PLUG (MAS PLUG)

(a) Plug each carburetor vacuum port to prevent entry of steel particles when drilling.

(b) Mark the center of the plug with a punch.

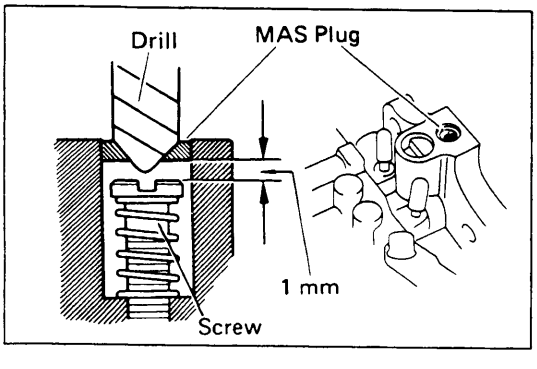

(c) Drill a 6.5mmϕ (0.256 in.ϕ)hole in the center of the plug.

NOTE:

- As there is only 1 mm (0.04 in.) clearance between the plug and screw, drill carefully and slowly to avoid drilling onto the screw.
- The drill may force the plug off at this time.

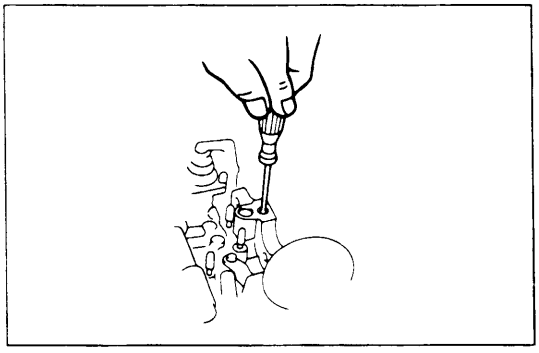

(d) Through the hole in the plug, fully screw in the mixture adjusting screw with a screwdriver.

NOTE: Be careful not to damage the screw tip by tightening the screw too tight.

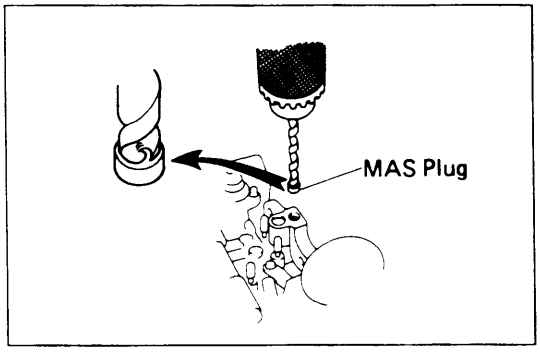

(e) Use a 7.5mmϕ (0.295 in.ϕ) drill to force the plug off.

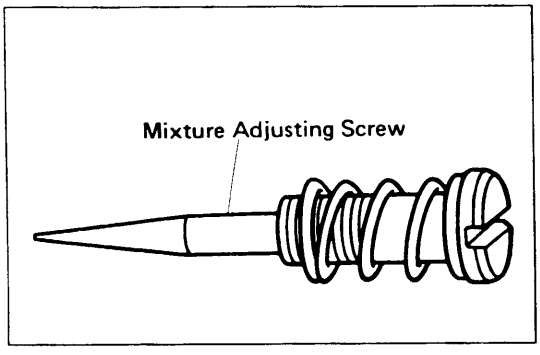

3. INSPECT MIXTURE ADJUSTING SCREW

(a) Blow off any steel particles with compressed air.

(b) Remove the screw and inspect it.

If the drill has gnawed into the screw top or if the tape position is damaged, replace the screw.

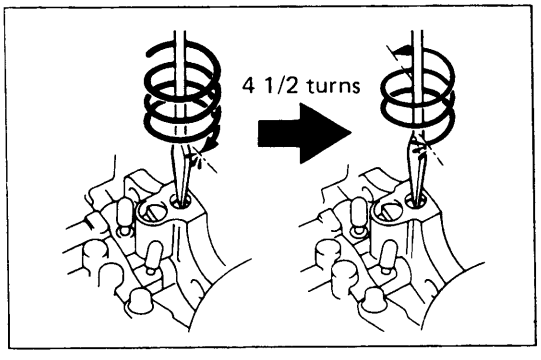

4. REINSTALL MIXTURE ADJUSTING SCREW

Fully screw in the idle mixture adjusting screw and then unscrew it about 3 1/2 turns.

NOTE: Be careful not to damage the screw tip by tightening the screw too tight.

5. REINSTALL CARBURETOR

(a) Reinstall the carburetor on the engine.

(b) Reconnect the vacuum hoses to the proper locations. Refer to the information lable on the vacuum hose.

6. REINSTALL AIR CLEANER

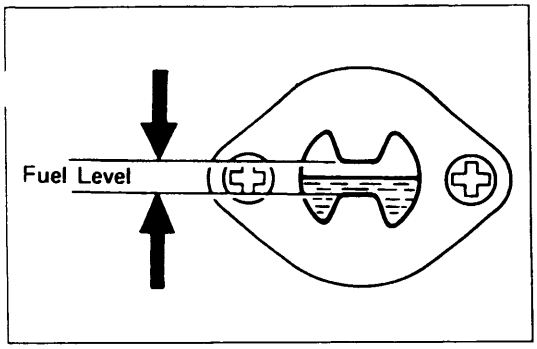

7. ADJUST IDLE SPEED AND IDLE MIXURE

(a) Initial conditions:
- Air cleaner installed
- Normal operating coolant temperature
- Choke fully open
- All accessories switched off
- All vacuum lines connected
- Ignition timing set correctly
- Transmission in N range
- Fuel level should be about even with the correct level in the sight glass.
- EBCV off (for Calif.)

(b) Start the engine.

(c) Set to the maximum speed by turning the IDLE MIXTURE ADJUSTING SCREW.

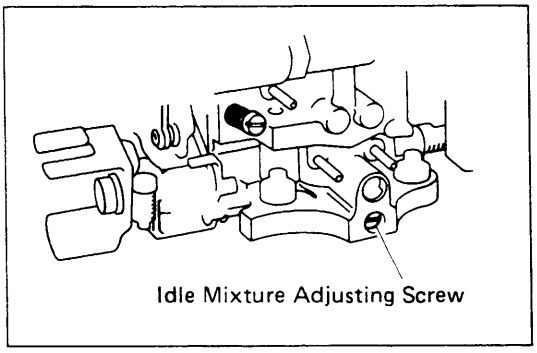

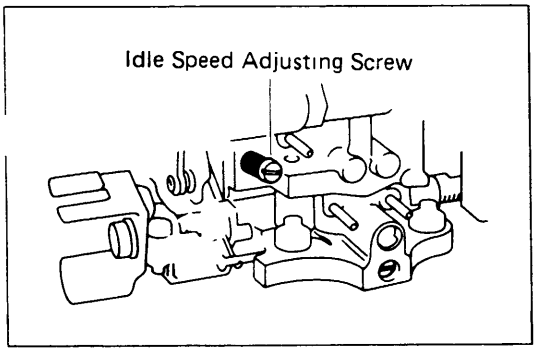

(d) Set to the idle mixture speed by turning the IDLE SPEED ADJUSTING SCREW.

Idle mixture speed:
740 rpm (M/T)
790 rpm (A/T)

(e) Before moving to the next step,continue adjustments (c) and (d) until the maximum speed will not rise any further no matter how much the IDLE MIXTURE ADJUSTING SCREW is adjusted.

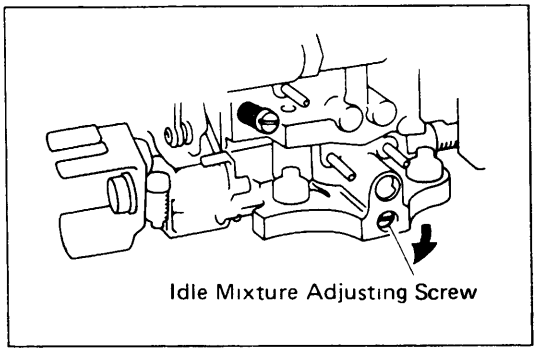

(f) Set to the idle speed by screwing in the IDLE MIXTURE ADJUSTING SCREW.

Idle speed:
700 rpm (M/T)
750 rpm (A/T)

NOTE: This is the Lean Drop Method for setting idle speed and mixture.

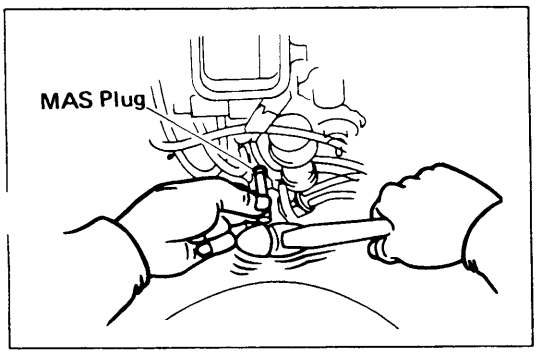

8. PLUG IDLE MIXTURE ADJUSTING SCREW

(a) Remove the air cleaner.

(b) Tap in new plug until it is even with carburetor surface.

(c) Reinstall the air cleaner.

9. CHECK AND ADJUST FAST IDLE SPEED

(See step 6 on page FU-22)

FUEL PUMP

COMPONENTS

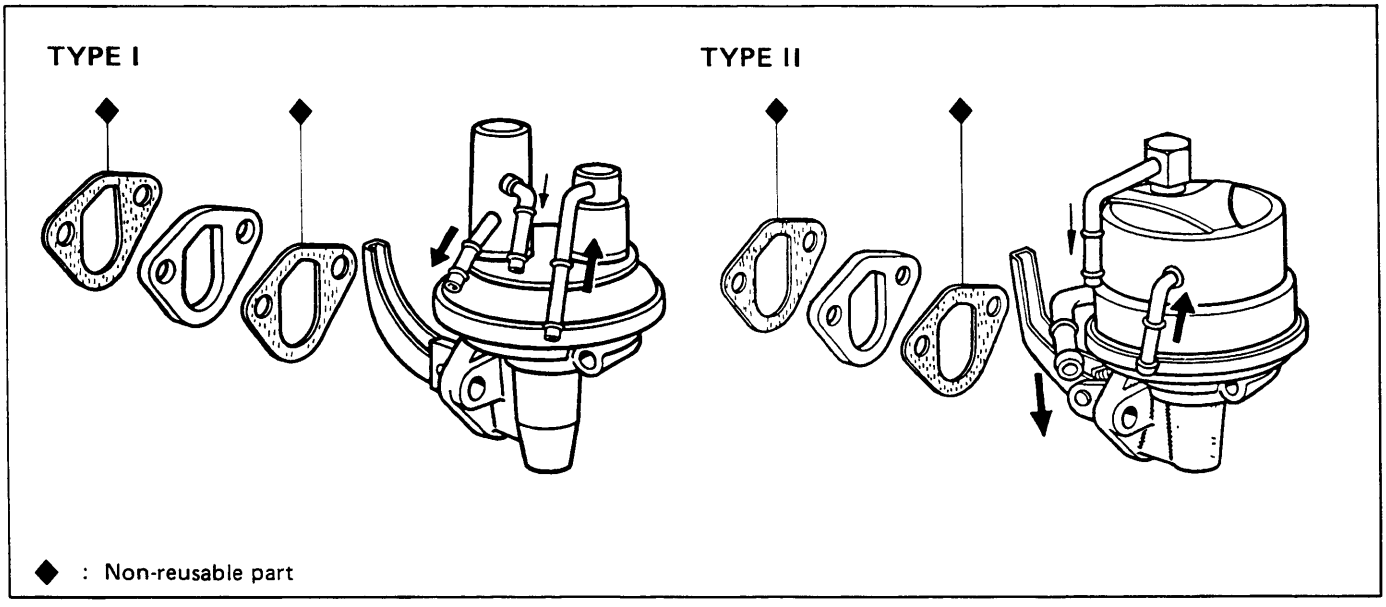

REMOVAL OF FUEL PUMP

1. **DRAIN COOLANT**

   Open the radiator drain cock and allow the coolant to dr- into a suitable container.

2. **DISCONNECT UPPER RADIATOR HOSE**

3. **DISCONNECT THREE FUEL HOSES FROM FUEL PUMP**

4. **REMOVE FUEL PUMP**

   Remove the two bolts, fuel pump and gasket.

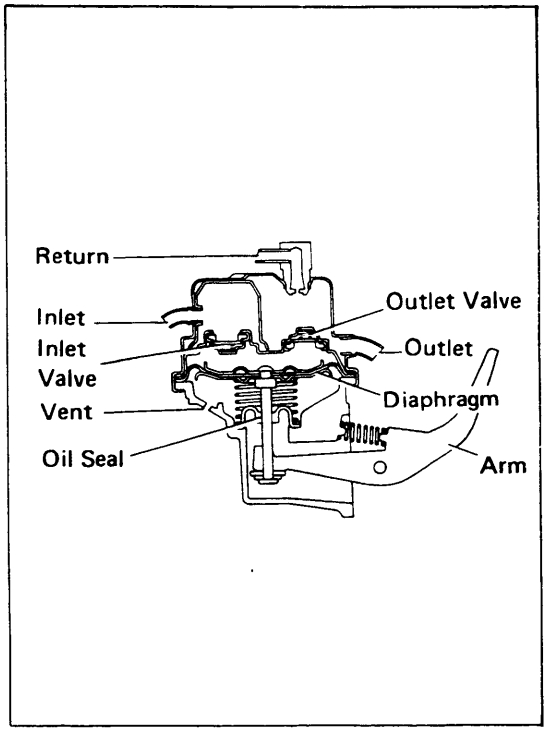

INSPECTION OF FUEL PUMP (Airtight Test)

PRECHECKS

Before preforming the following checks on the fuel pump:

(a) Run some fuel through the pump to insure that the check valves seal tightly (a dry check valve may not seal properly).

(b) Without blocking off any pipe,operate the pump lever and check the amount of force necessary for operation and the amount of arm play.This same amount of force should be used in the checks.

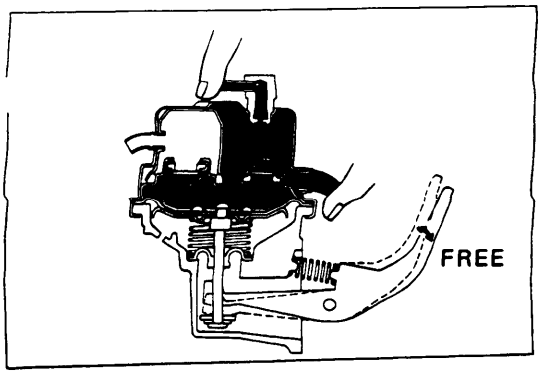

1. **CHECK INLET VALVE**

   Block off the outlet pipes with your finger and check that there is an increase in lever arm play and that the lever arm moves without tension.

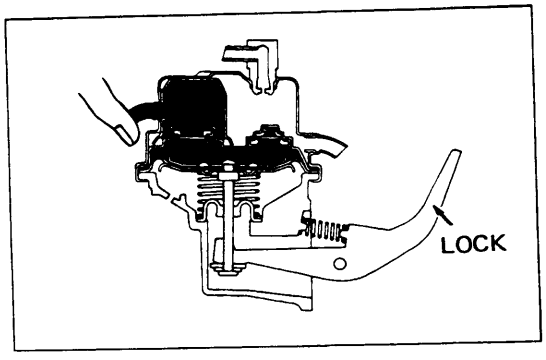

2. **CHECK OUTLET VALVE**

   Block off the inlet pipe with your finger and check that the arm locks (does not operate with same amount of force used in the precheck above).

   NOTE: Never use more force than that used in the precheck (This applies to checks 3 and 4 also).

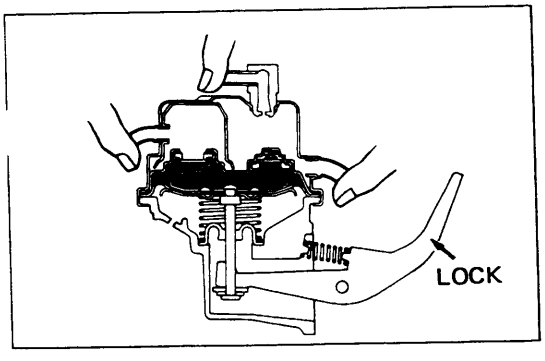

3. **CHECK DIAPHRAGM**

   Block off the inlet and outlet pipes and check that the pump arm locks.

   NOTE: If any of these checks are not as specified, the caulking (sealing) of the body and upper casing is defective.

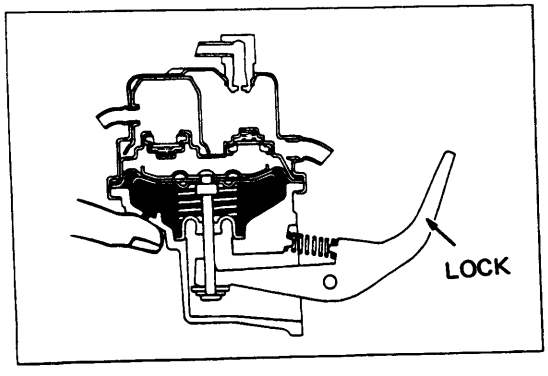

4. **CHECK OIL SEAL**

   Block off the vent hole with your finger and check that the pump arm locks.

INSTALLATION OF FUEL PUMP

(See page FU-28)

1. **INSTALL FUEL PUMP WITH NEW GASKET**
2. **INSTALL TWO BOLTS**
3. **CONNECT THREE FUEL HOSES TO FUEL PUMP**
4. **CONNECT UPPER RADIATOR HOSE**
5. **FILL WITH COOLANT**

   Close the radiator drain cock and fill the radiator with a good brand of ethylene-glycol coolant.

6. **START ENGINE AND CHECK FOR LEAKS**

Fuel Tank and Line

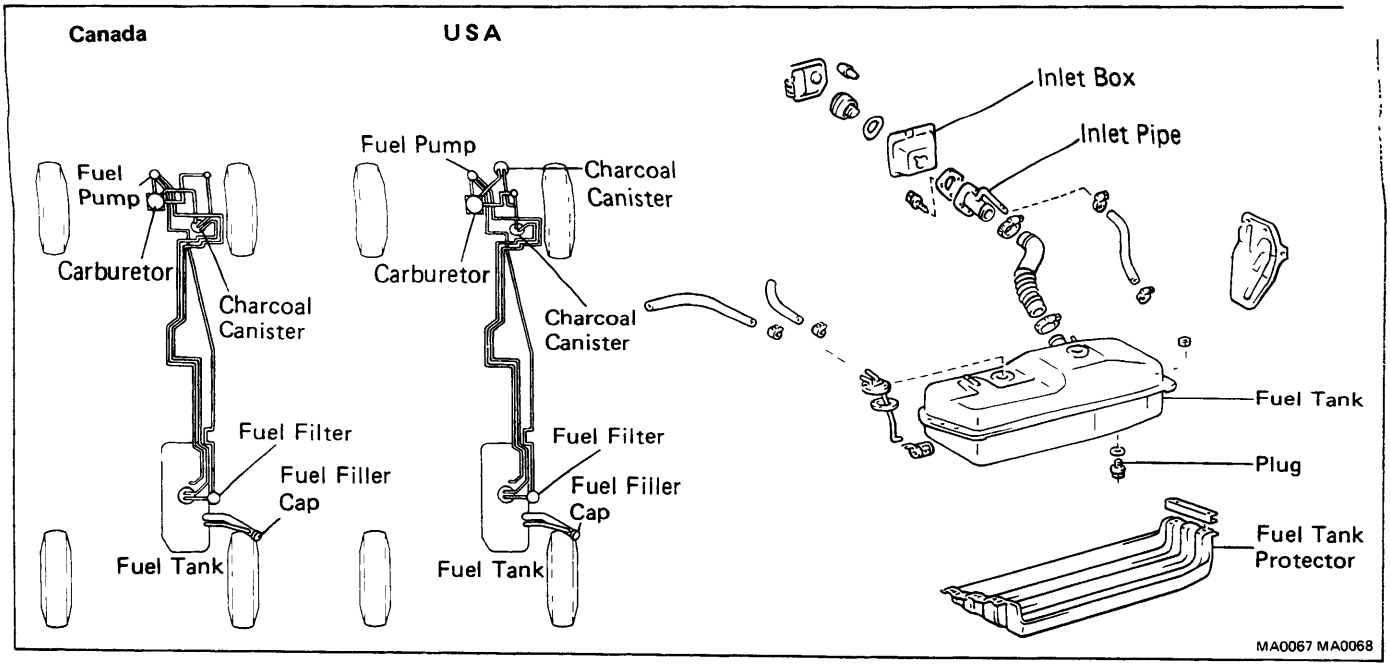

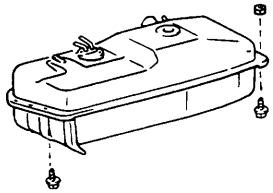

Torque: 185 kg-cm (13 ft-lb, 18 N·m)

PRECAUTIONS

1. **Always use new gaskets when replacing the fuel tank or component parts.**
2. **When re-installing, be sure to include the rubber protectors on the upper surfaces of the fuel tank and tank band.**
3. **Apply the proper torque to all tightening parts.**

INSPECT FUEL LINES AND CONNECTIONS

(a) Inspect the fuel lines for cracks, or leakage and connections for deformation.

(b) Inspect the fuel tank vapor vent system hoses and connections for looseness, sharp bends or damage.

(c) Inspect the fuel tank for deformation, cracks, fuel leakage or tank band looseness.

(d) Inspect the inlet pipe for damage or fuel leakage.

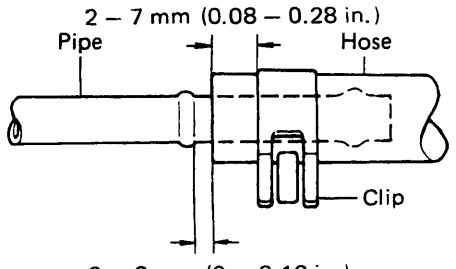

(e) The hose and tube connections are as shown in the illustration.

If a problem is found, repair or replace the parts as necessary.

COOLING SYSTEM

	Page
TROUBLESHOOTING	CO-2
WATER PUMP	CO-2
THERMOSTAT	CO-5
RADIATOR	CO-6

TROUBLESHOOTING

Problem	Possible cause	Remedy	Page
Engine overheats	Radiator plugged or cap faulty	Check radiator	CO-6
	Fan belt loose or missing	Adjust or replace belt	
	Dirt, leaves or insects on radiator or condenser	Clean radiator or condenser	CO-6
	Hoses, water pump, thermostat housing, radiator, heater, core plugs or head gasket leakage	Repair as necessary	
	Thermostat faulty	Check thermostat	CO-5
	Ignition timing retarded	Reset timing	IG-10
	Fluid coupling faulty	Replace fluid coupling	CO-3
	Radiator hose plugged or rotted	Replace hose	CO-6
	Water pump faulty	Replace water pump	CO-3
	Cylinder head or block cracked or plugged	Repair as necessary	

WATER PUMP

COMPONENTS

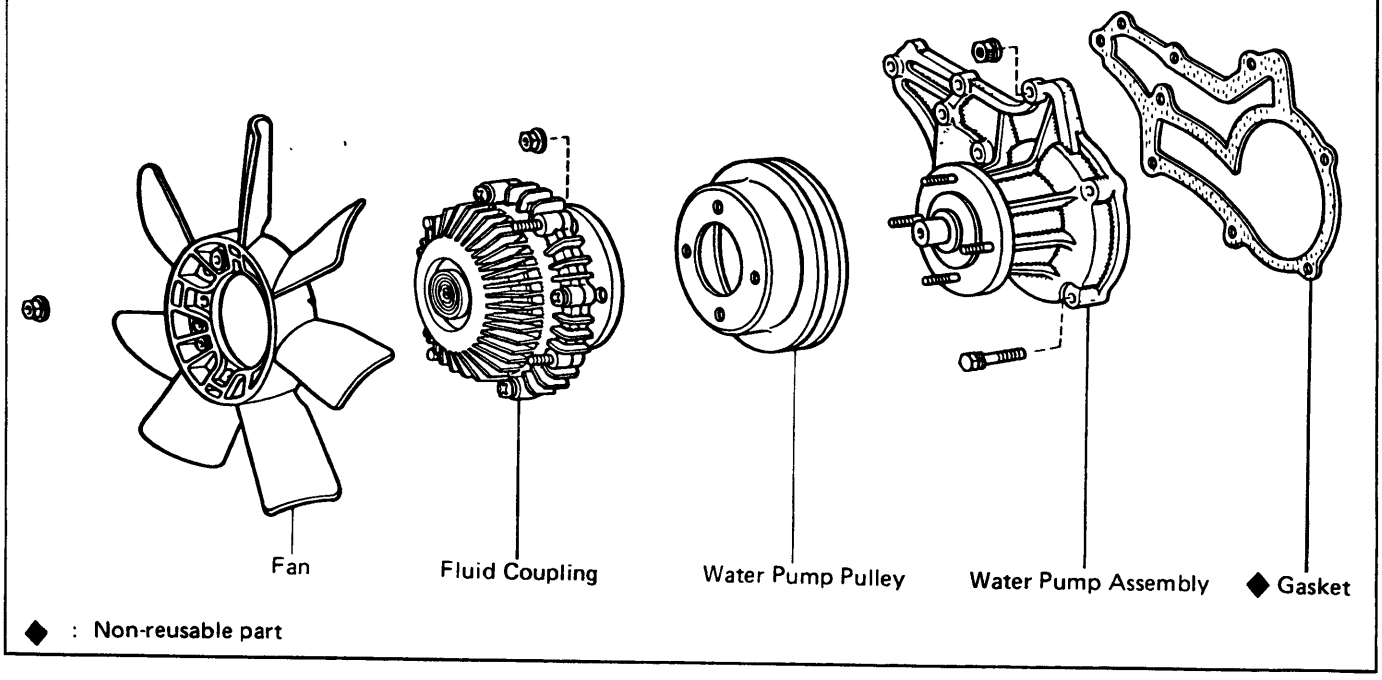

◆ : Non-reusable part

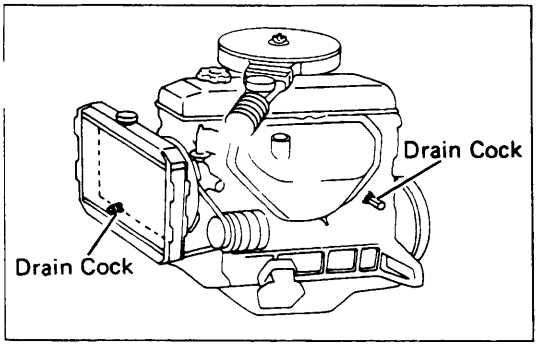

REMOVAL OF WATER PUMP

1. DRAIN COOLANT

Open the radiator and engine drain cocks, and allow coolant to drain into a suitable container.

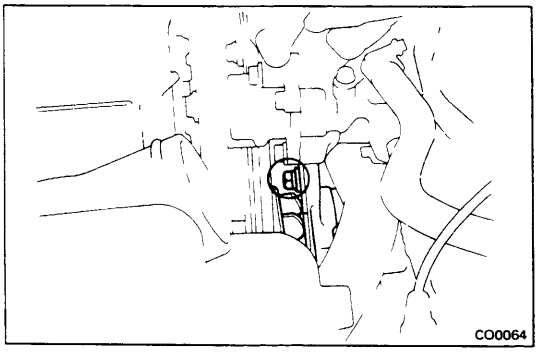

2. LOOSEN FAN BELT

Loosen alternator pivot and adjusting bolts. Swing the alternator toward the engine.

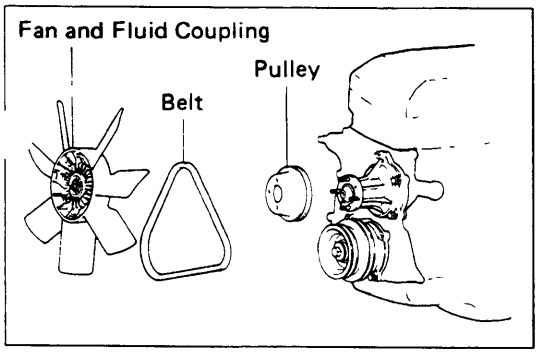

3. REMOVE FLUID COUPLING, FAN AND WATER PUMP PULLEY

(a) Remove the four nuts from the fluid coupling flange.

(b) Remove the fluid coupling, water pump pulley and fan belt.

(c) Remove the fan from the fluid coupling.

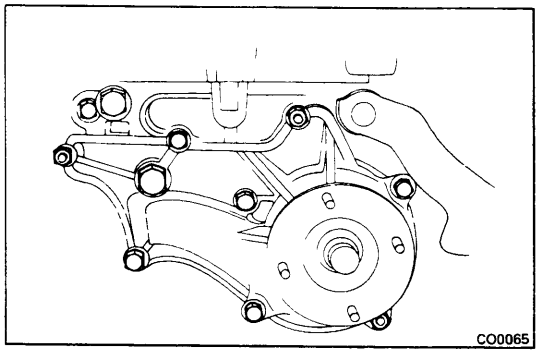

4. REMOVE WATER PUMP

Remove the six bolts, three nuts, water pump and gasket.

INSPECTION OF WATER PUMP

1. INSPECT WATER PUMP BEARING

Check that water pump bearing operation is not rough or noisy.

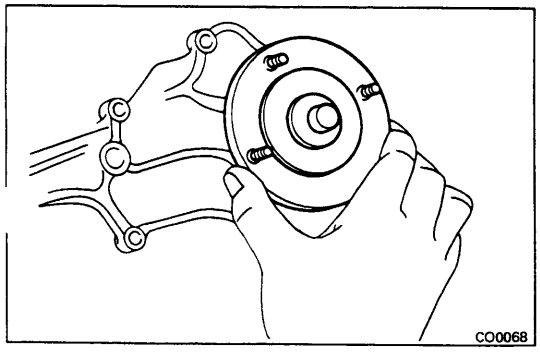

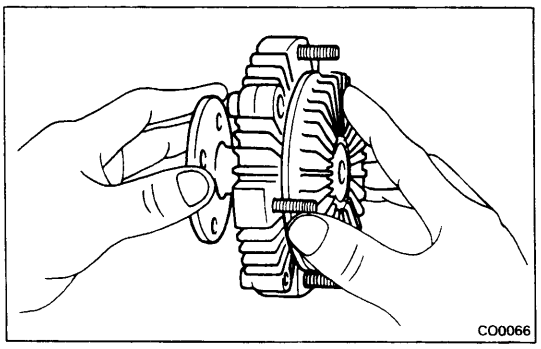

2. **INSPECT FLUID COUPLING**

Check the fluid coupling for damage and silicone oil leakage

INSTALLATION OF WATER PUMP

(See page CO-2)

1. **INSTALL WATER PUMP OVER NEW GASKET**

Install the water pump and a new gasket with six bolts and three nuts.

2. **INSTALL FAN BELT AND PULLEY**

(a) Check the fan belt for cracks or damage.

(b) Place the fan belt on the pulley and place the pulley on the water pump bolts.

3. **INSTALL FAN ON FLUID COUPLING**

4. **INSTALL FLUID COUPLING**

Install the fluid coupling on the pulley with four nuts.

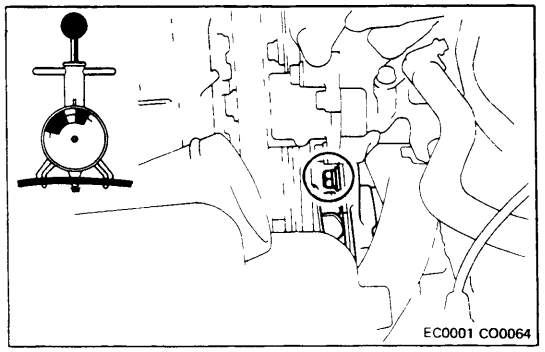

5. **ADJUST FAN BELT TENSION**

Using a belt tension gauge, check the drive belt tension.

Belt tension gauge:

Nippondenso BTG-20 (95506-00020) or
Borroughs No. BT-33-73F

Belt tension:

New belt	**125 ± 25 lb**
Used belt	**80 ± 20 lb**

6. **REFILL COOLANT**

Close the radiator and engine drain cocks. Fill with a good brand of ethylene-glycol coolant.

Total capacity: 8.4 liters (8.9 US qts, 7.4 Imp. qts)

7. **START ENGINE AND CHECK FOR LEAKS**

THERMOSTAT

REMOVAL OF THERMOSTAT

1. **DRAIN COOLANT**

   Drain the coolant from the radiator into a clean container. The coolant may be reused if specific gravity is within specifications.

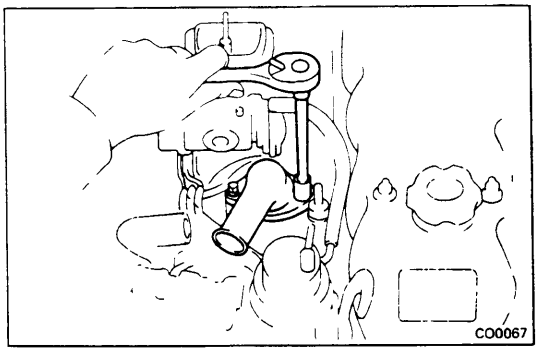

2. **REMOVE WATER OUTLET**

   Remove the two bolts and water outlet from the intake manifold.

3. **REMOVE THERMOSTAT AND GASKET**

INSPECTION OF THERMOSTAT

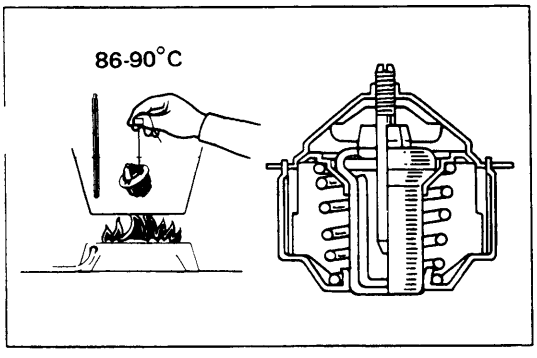

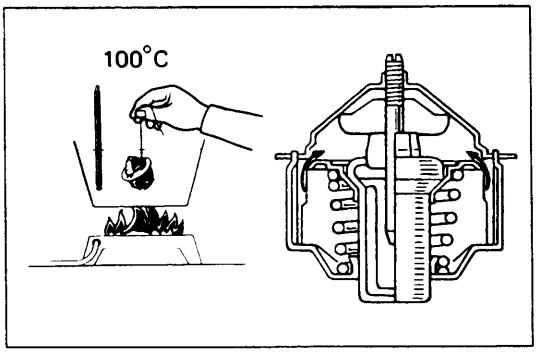

NOTE: The thermostat is marked with the valve opening temperature.

(a) Immerse the thermostat in water and heat the water gradually.

(b) Check the valve opening temperature and valve lift. If the valve opening temperature and valve lift are out of following specifications, replace the thermostat.

Valve opening temperature: 86 — 90 °C (187 — 194 °F)

Valve lift: More than 8 mm (0.31 in.) at 100 °C (212 °F)

(c) Check that the valve spring is tight when the thermostat is fully closed, and replace if necessary.

INSTALLATION OF THERMOSTAT

1. **PLACE THERMOSTAT IN INTAKE MANIFOLD**

2. **INSTALL WATER OUTLET**

   Install the water outlet on a new gasket with two bolts.

3. **REFILL COOLANT**

   Close the radiator drain cock. Fill with a good brand of ethylene-glycol coolant.

RADIATOR

CLEANING OF RADIATOR

Using water or a steam cleaner, remove mud and dust from radiator core.

CAUTION: If using high pressure type cleaner, be careful not to deform the radiator core fins. For example, keep a distance of at least 40 — 50 cm (15.75 — 19.69 in.) between the radiator core and cleaner nozzle when the cleaner nozzle pressure is 30 — 35 kg/cm² (427 — 498 psi, 2,942 — 3,432 kPa).

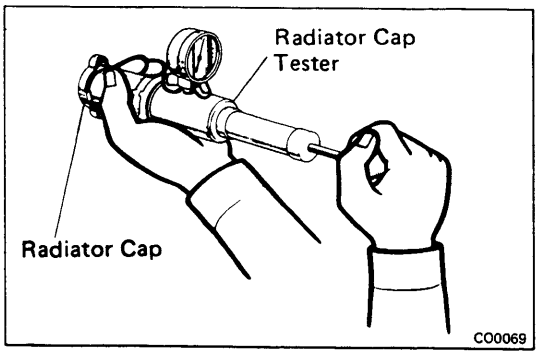

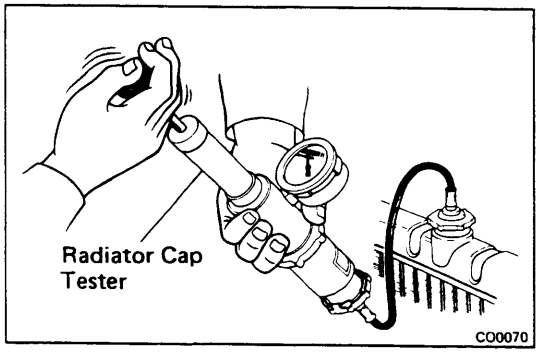

INSPECTION OF RADIATOR

1. CHECK RADIATOR CAP

Using a pressure tester, pump the tester until the relief valve opens.
Check that the valve opens between 0.75 kg/cm² (10.7 psi, 74 kPa) and 1.05 kg/cm² (15 psi, 103 kPa).

Check that the pressure gauge does not drop rapidly when pressure on the cap is below 0.6 kg/cm² (8.5 psi, 59 kPa).

If either check is not within limits, replace the cap.

2. CHECK COOLING SYSTEM FOR LEAKS

Attach the pressure tester to the radiator and pump the tester to 0.9 kg/cm² (12.8 psi, 88 kPa). Check that pressure does not drop.
If the pressure drop, check for leaks from the hoses, radiator or water pump. If no external leaks are found, check the heater core, block and intake manifold.

REMOVAL OF RADIATOR

1. DRAIN COOLANT

Open radiator drain and engine drain cocks (located on the left of engine block). Drain the fluid into a suitable container.

2. DISCONNECT TWO RADIATOR HOSES

3. REMOVE FAN SHROUD

4. DISCONNECT TWO COOLER HOSES (A/T only)

NOTE:

(1) Be careful as some oil will leak out. Catch it in a suitable container.

(2) Plug the hose to prevent oil from escaping.

5. DISCONNECT COOLANT RESERVOIR TUBE

6. REMOVE FOUR RADIATOR MOUNTING BOLTS AND RADIATOR

LUBRICATION SYSTEM

	Page
TROUBLESHOOTING	LU-2
OIL PRESSURE CHECK	LU-2
REPLACEMENT OF ENGINE OIL AND OIL FILTER	LU-3
OIL PUMP	LU-4

TROUBLESHOOTING

Problem	Possible cause	Remedy	Page
Oil leakage	Cylinder head, cylinder block or oil pump body damaged or cracked	Replace as necessary	
	Oil seal faulty	Replace oil seal	LU-4
	Gasket faulty	Replace gasket	
Low oil pressure	Oil leakage	Replace as necessary	
	Relief valve faulty	Replace relief valve	LU-4
	Oil pump faulty	Replace oil pump	LU-4
	Engine oil poor quality	Replace engine oil	LU-3
	Crankshaft bearing faulty	Replace bearing	
	Connecting rod bearing faulty	Replace bearing	
High oil pressure	Oil filter clogged	Replace oil filter	LU-3
	Relief valve faulty	Replace relief valve	LU-4

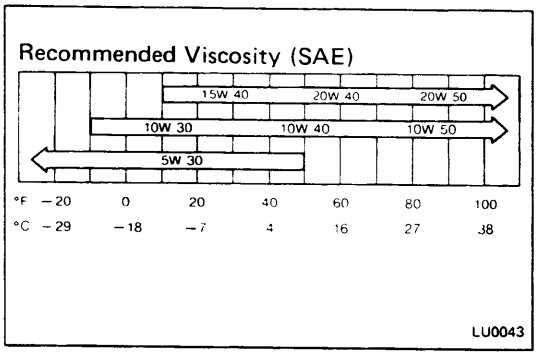

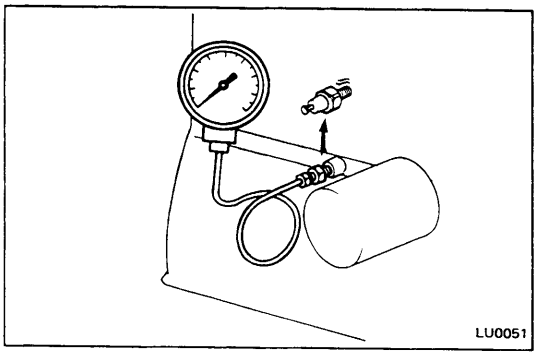

OIL PRESSURE CHECK

1. **CHECK OIL QUALITY**

   Check the oil for deterioration, entry of water, discolori or thinning.

   If the quality is poor, change the oil.

   Use API grade SF or SF/CC multigrade, fuel-efficient and recommended viscosity oil.

2. **CHECK OIL LEVEL**

   The oil level should be between the L and F marks on the level gauge. If low, check for leakage and add oil up to the F mark.

3. **REMOVE OIL PRESSURE SWITCH OR SENDER GAUGE**

4. **INSTALL OIL PRESSURE GAUGE**

5. **START ENGINE**

   Start engine and warm it up to normal operating temperature.

6. **MEASURE OIL PRESSURE**

   Oil pressure:

At idle speed	**More than 0.3 kg/cm² (4.3 psi, 29 kPa)**
At 3,000 rpm	**2.5 — 5.0 kg/cm² (36 — 71 psi, 245 — 490 kPa)**

   NOTE: Check for oil leakage after reinstalling the oi pressure switch or sender guage.

REPLACEMENT OF ENGINE OIL AND OIL FILTER

1. **DRAIN ENGINE OIL**

   Remove the oil drain plug and drain the oil into a container.

2. **REPLACE OIL FILTER**

   (a) Using SST, remove the oil filter (located on right side of the engine block).

   SST 09228-44010

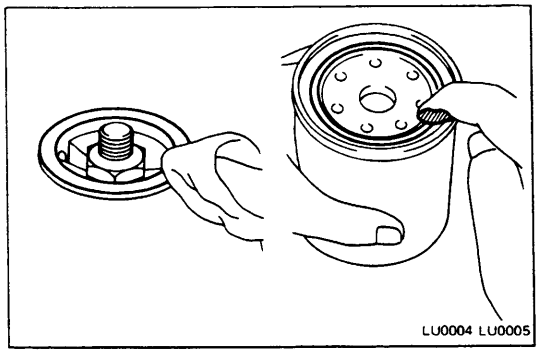

   (b) Inspect and clean the oil filter installation surface.

   (c) Apply clean engine oil to the gasket of the new oil filter.

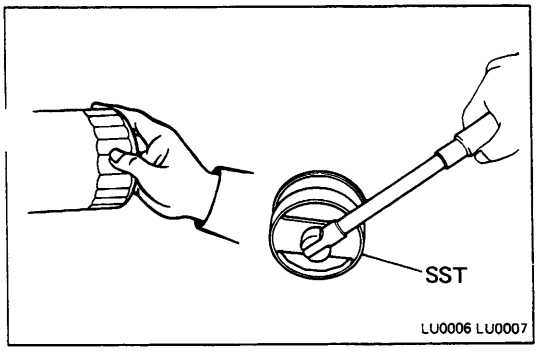

   (d) Lightly screw in the oil filter to where you feel resistance.

   (e) Then, using SST, tighten the oil filter an extra 3/4 turn.

   SST 09228-44010

3. **FILL WITH ENGINE OIL**

   (a) Clean and install the oil drain plug with a new gasket.

   (b) Fill the engine with new oil API grade SF or SF/CC, multigrade, fuel efficient and recommended viscosity oil.

   Oil capacity:

Dry fill	**4.8 liters (5.1 US qts, 4.2 Imp. qts)**
Drain and refill	
w/o Oil filter change	**4.0 liters (4.2 US qts, 3.5 Imp. qts)**
w/ Oil filter change	**4.6 liters (4.9 US qts, 4.0 Imp. qts)**

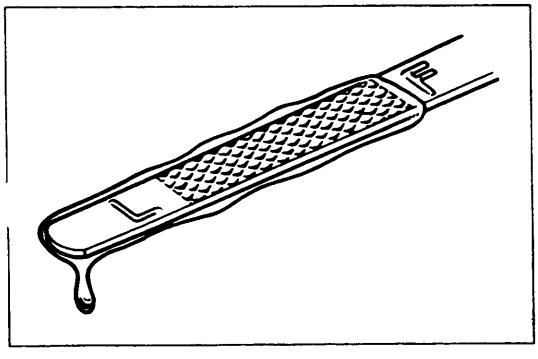

4. **START ENGINE AND CHECK FOR LEAKS**

5. **RECHECK ENGINE OIL LEVEL**

   Recheck the engine oil level and refill as necessary.

   NOTE: Insert the oil level guage with the curved tip pointed toward the engine.

OIL PUMP

COMPONENTS

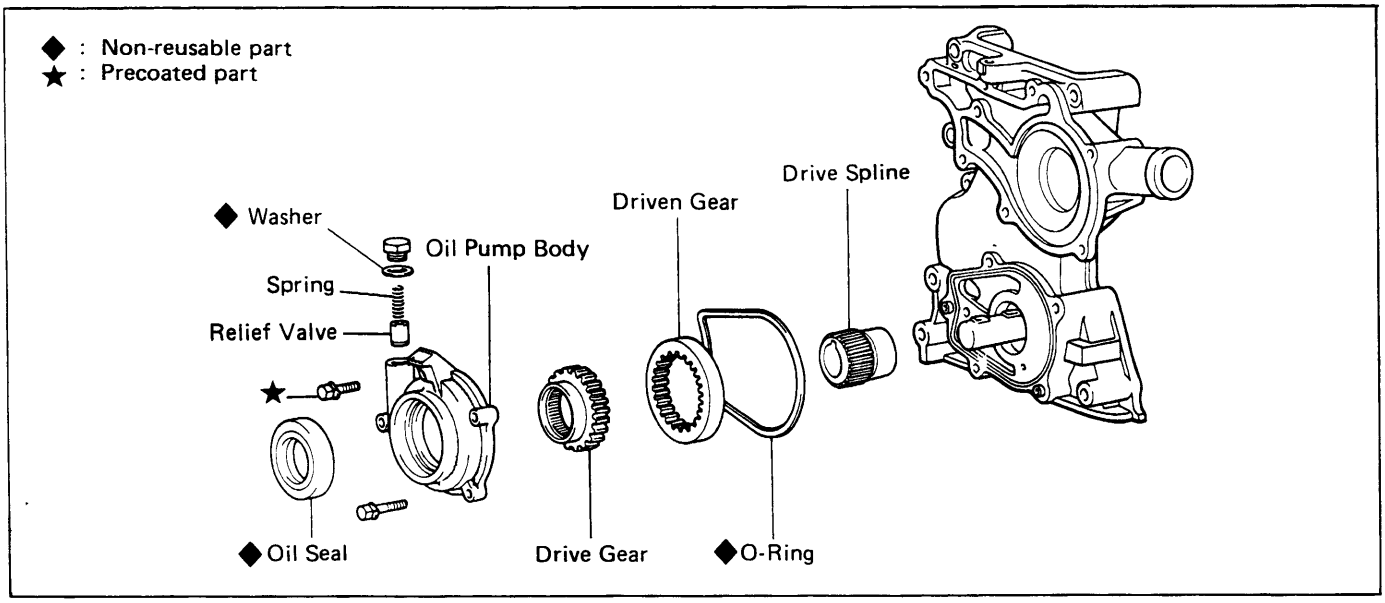

REMOVAL AND DISASSEMBLY OF OIL PUMP

NOTE: When repairing the oil pump, the oil pan and strainer should be removed and cleaned.

1. **REMOVE OIL PAN (ON-VEHICLE)**
   (See step 3 on page EM-40)
2. **REMOVE OIL STRAINER**
   Remove the four bolts holding the oil strainer.
3. **REMOVE DRIVE BELTS**
4. **REMOVE CRANKSHAFT PULLEY**
   (See step 3 on page EM-41)

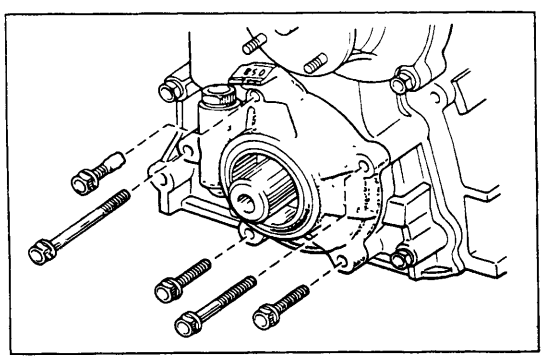

5. **REMOVE OIL PUMP ASSEMBLY**
   Remove the five bolts and the oil pump assembly.

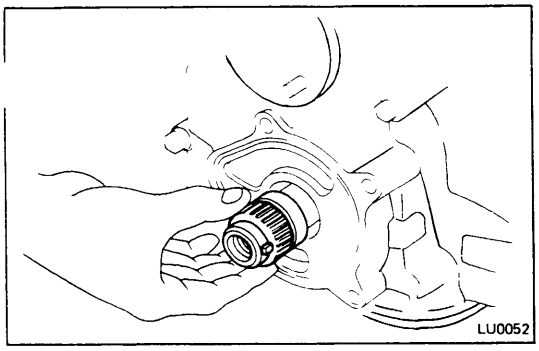

6. REMOVE OIL PUMP DRIVE SPLINE AND O-RING

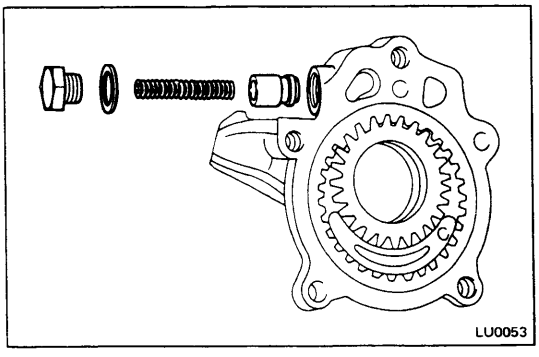

7. DISASSEMBLE OIL PUMP ASSEMBLY

(a) Unscrew the relief valve plug, and remove the spring and the relief valve piston.

(b) Remove the drive and the driven gears.

INSPECTION OF OIL PUMP

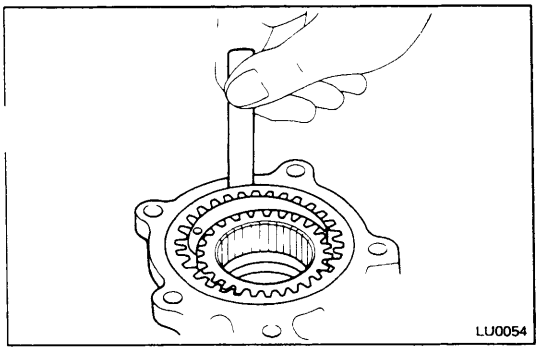

1. MEASURE BODY CLEARANCE

Using a feeler gauge, measure the clearance between the driven gear and body.

If the clearance is greater than the maximum, replace the gear and/or body.

Maximum clearance: 0.2 mm (0.008 in.)

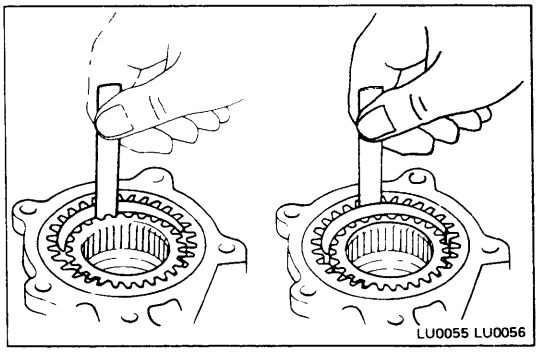

2. MEASURE TIP CLEARANCE

Using a feeler gauge, measure the clearance between both gear tips and the crescent.

If the clearance is greater than the maximum, replace the gears and/or body.

Maximum clearance: 0.3 mm (0.012 in.)

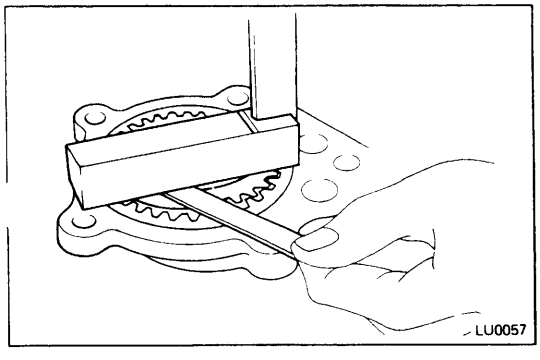

3. MEASURE SIDE CLEARANCE

Using a feeler gauge and a flat block, measure the side clearance as shown.

If the clearance is greater than the maximum, replace the gears and/or body.

Maximum clearance: 0.15 mm (0.0059 in.)

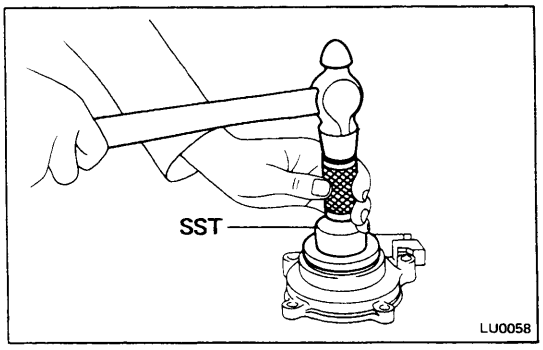

REPLACE FRONT OIL SEAL

1. **REMOVE OIL SEAL**

   Remove the oil seal with a small screwdriver.

2. **INSTALL OIL SEAL**

   Drive in the new oil seal with SST.

   SST 09223-50010

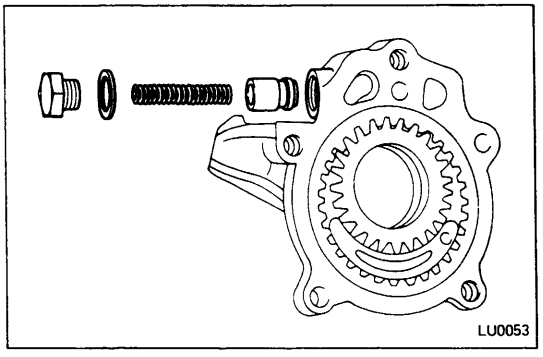

ASSEMBLY AND INSTALLATION OF OIL PUMP

(See page LU-4)

1. **ASSEMBLE OIL PUMP ASSEMBLY**

   (a) Install relief valve piston and the spring in the body, and screw on the relief valve plug with the gasket.

   (b) Insert the drive and driven gears into the pump body.

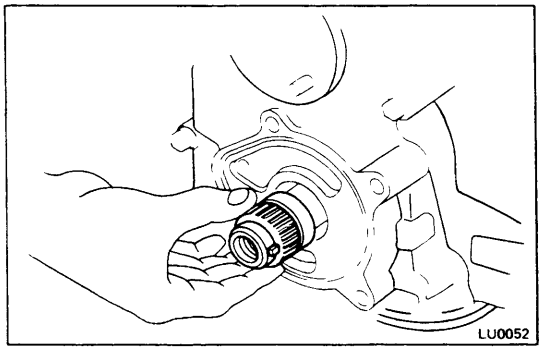

2. **INSTALL OIL PUMP DRIVE SPLINE AND O-RING**

   (a) Slide the pump drive spline onto the crankshaft.

   (b) Place the O-ring into the groove.

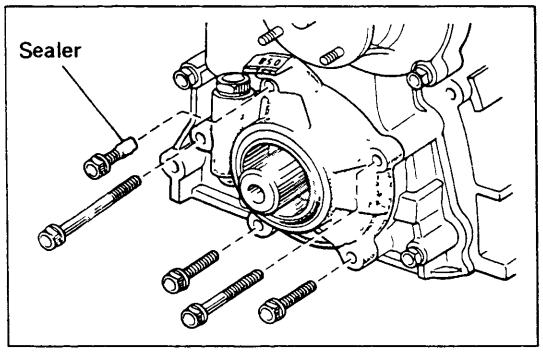

3. **INSTALL OIL PUMP**

   Apply the sealer to the upper bolt and tighten the five bolts.

4. **INSTALL FOLLOWING ITEMS:**

   (a) Clean oil strainer with four bolts.

   (b) Clean oil pan and cylinder block. (See step 10 on page EM-46)

   (c) Crankshaft pulley. (See step 8 on page EM-45)

   (d) Drive belts. (See step 9 on page EM-45)

IGNITION SYSTEM

	Page
PRECAUTIONS	IG-2
TROUBLESHOOTING	IG-2
ELECTRONIC SPARK ADVANCE	IG-3
ON-VEHICLE INSPECTION	IG-4
DISTRIBUTOR	IG-10

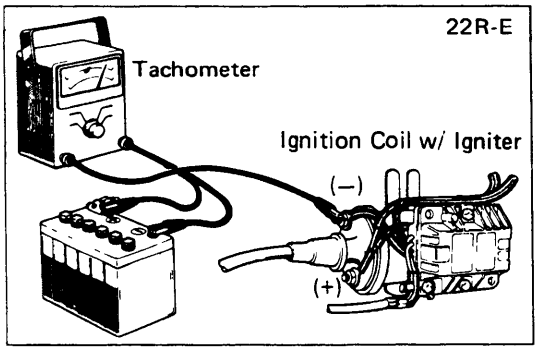

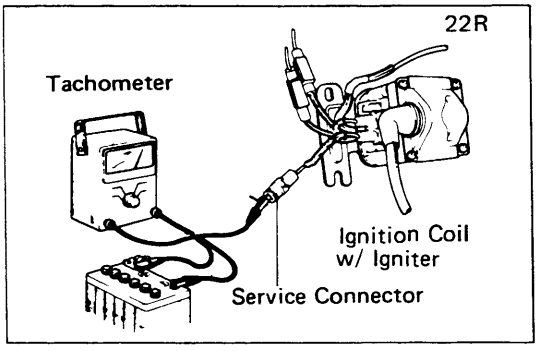

PRECAUTIONS

1. **Do not allow the ignition switch to be ON for more th 10 minutes if the engine will not start.**
2. **As some tachometers are not compatible with this ignition system, it is recommended that you consult with the manufacturer.**
3. **NEVER allow the ignition coil terminals to touch ground as it could result in damage to the igniter and/or ignition coil.**
4. **Do not disconnect the battery when the engine is running.**
5. **Make sure that the igniter is properly grounded to the body.**
6. **When a tachometer is connected to the system, connect the tachometer test probe to the ignition coil negative terminal.**

TROUBLESHOOTING

Problem	Possible cause	Remedy	Page
Engine will not start/ Hard to start (cranks ok)	Ignition problems • Ignition coil • Igniter • Distributor Spark plugs faulty Ignition wiring disconnected or broken	Perform spark test Inspect coil Inspect igniter Inspect distributor Inspect plugs Inspect wiring	IG-4 IG-5,7 IG-6,8 IG-9,10 IG-4 IG-4
Rough idle or stalls	Spark plugs faulty Ignition wiring faulty Incorrect ignition timing Ignition problems • Ignition coil • Igniter • Distributor	Inspect plugs Inspect wiring Reset timing Perform spark test Inspect coil Inspect igniter Inspect distributor	IG-4 IG-4 IG-10 IG-4 IG-5,7 IG-6,8 IG-9,10
Engine hesitates/ Poor acceleration	Spark plugs faulty Ignition wiring faulty Incorrect ignition timing	Inspect plugs Inspect wiring Reset timing	IG-4 IG-4 IG-10
Engine dieseling (for. carb.) (runs after ignition switch is turned off)	Fuel cut system faulty	Repair fuel cut system	
Muffler explosion (after fire) all the time	Incorrect ignition timing	Reset timing	IG-10
Engine backfires	Incorrect ignition timing	Reset timing	IG-10
Poor gasoline mileage	Spark plugs faulty Incorrect ignition timing	Inspect plugs Reset timing	IG-4 IG-10
Engine overheats	Incorrect ignition timing	Reset timing	IG-10

ELECTRONIC SPARK ADVANCE (ESA) FOR 22R-E

The ECU is programmed with data for optimum ignition timing under any and all operating conditions. Using data provided by sensors which monitor various engine functions (rpm, intake air volume, eng. temperature, etc.) the microcomputer (ECU) triggers the spark at precisely the right instant.

ESA SYSTEM CIRCUIT

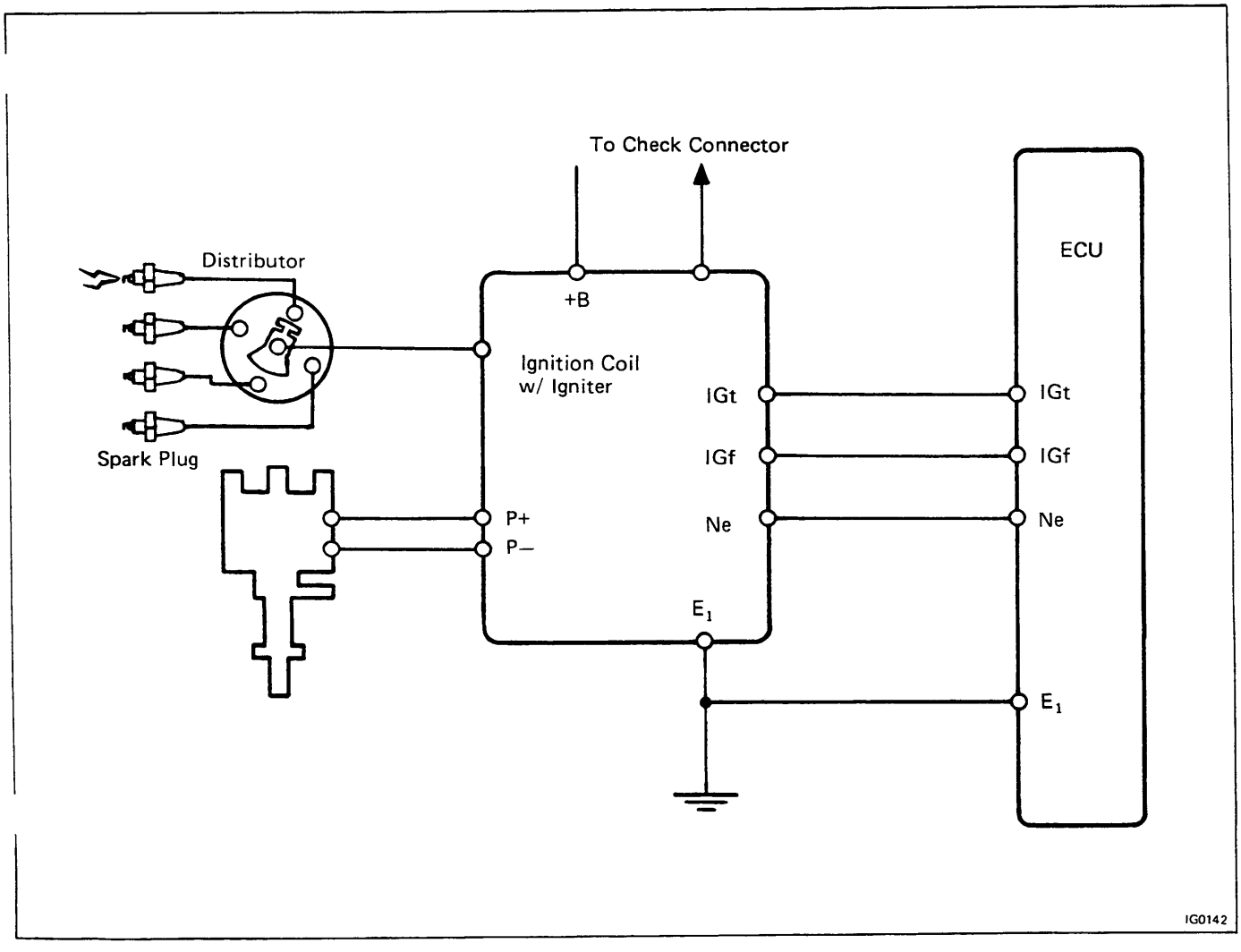

ON-VEHICLE INSPECTION

SPARK TEST

NOTE: Perform this test to check that current is coming from the distributor.

1. **CONNECT TIMING LIGHT TO EACH SPARK PLUG**
2. **CRANK ENGINE AND CHECK THAT LIGHT FLASHES**

   If the timing light does not flash, check the wiring connections, ignition coil, igniter, distributor or ignition switch.

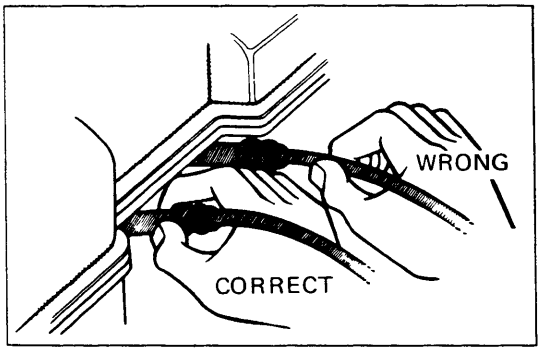

INSPECTION OF HIGH TENSION CORD

1. **CAREFULLY REMOVE HIGH TENSION CORDS BY RUBBER BOOT**

   CAUTION: DO NOT pull on or bend the cords to avoid damaging the conductor inside.

2. **INSPECT CORD TERMINALS**

   Check the terminals for corrosion, breaks or distortion. Replace cords as required.

3. **CHECK CORD RESISTANCE**

   Using an ohmmeter, check that the resistance does not exceed the maximum. Replace cords as required.

   Maximum resistance: 25 kΩ per cord

INSPECTION OF SPARK PLUGS

1. **REMOVE SPARK PLUGS**
2. **CLEAN AND INSPECT SPARK PLUGS**

   (a) Clean the spark plugs with a spark plug cleaner or wire brush.

   (b) Inspect the spark plugs for electrode wear, thread damage and insulator damage.

   If a problem is found, replace the plugs.

   Spark plug: ND W16EXR-U
   NGK BPR5EY

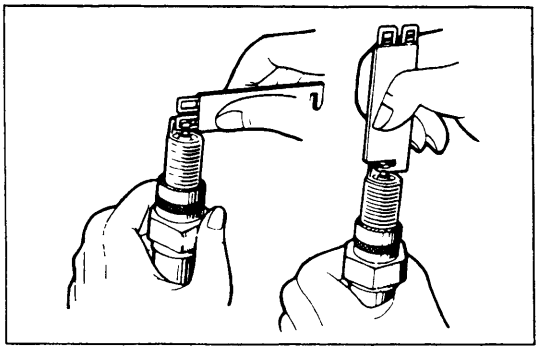

3. **ADJUST ELECTRODE GAP**

   Carefully bend the outer electrode to obtain the correct electrode gap.

   Correct electrode gap: 0.8 mm (0.031 in.)

4. **INSTALL SPARK PLUGS**

[FOR 22R]

INSPECTION OF IGNITION COIL

1. **DISCONNECT HIGH TENSION WIRE AND IGNITION COIL CONNECTOR**

2. **CLEAN COIL AND CHECK FOLLOWING:**
   (a) Check for cracks or damage.
   (b) Check the terminals for carbon tracks.
   (c) Check the high-tension wire hole for carbon deposits and corrosion.

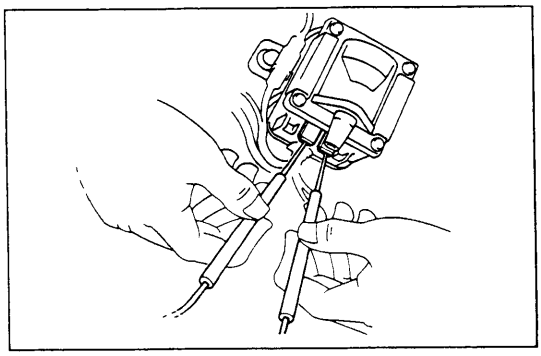

3. **MEASURE PRIMARY COIL RESISTANCE**
   Using an ohmmeter, measure the resistance between the positive (+) (brown side) and negative (—) (black side) terminals.
   Primary coil resistance (cold): 0.4 — 0.5 Ω

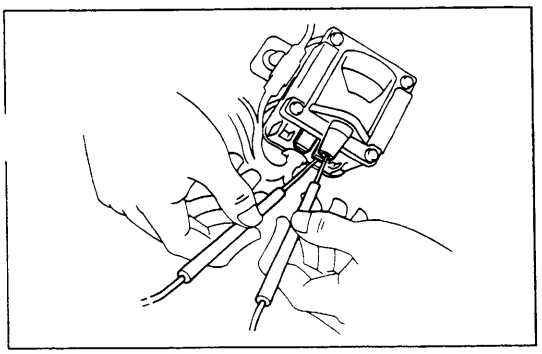

4. **MEASURE SECONDARY COIL RESISTANCE**
   Using an ohmmeter, measure the resistance between the positive (+) terminal (brown side) and the high tension terminal.
   Secondary coil resistance (cold): 8.5 — 11.5 kΩ

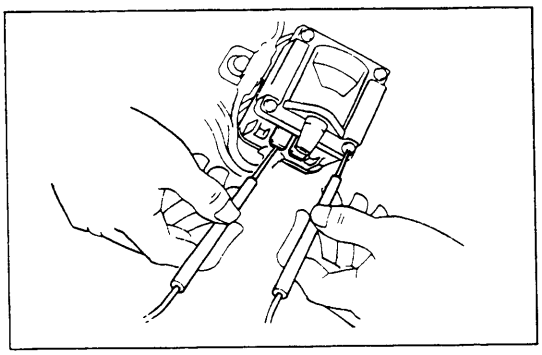

5. **MEASURE INSULATION RESISTANCE**
   Using an ohmmeter, measure the resistance between the positive (+) terminal and the igniter body.
   Insulation resistance: Infinity
   If a problem with the coil is found, replace it.

6. **CONNECT HIGH TENSION WIRE AND IGNITION COIL CONNECTOR**

INSPECTION OF IGNITER

1. **TURN IGNITION SWITCH ON**

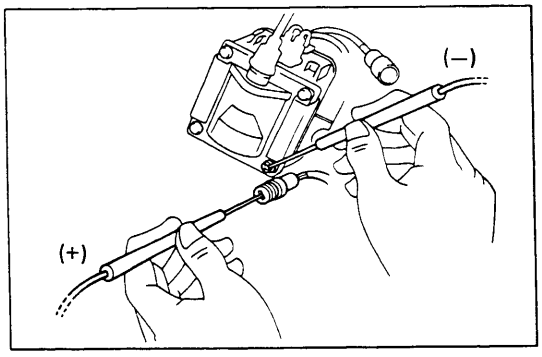

2. **CHECK POWER SOURCE LINE VOLTAGE**

(a) Disconnect the wiring connector for brown wire and yellow wire.

(b) Using a voltmeter, connect the positive (+) probe to the brown wire for the wire harness side and the negative (−) probe to body ground.

Voltage: Approx. 12 V

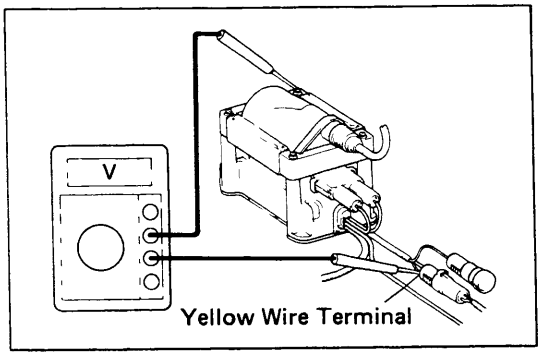

3. **CHECK POWER TRANSISTOR IN IGNITER**

(a) Connect the wiring connector for brown wire and yellow wire.

(b) Using a voltmeter, connect the positive (+) probe the yellow wire for the igniter side and the negative (−) probe to body ground.

Voltage: Approx. 12 V

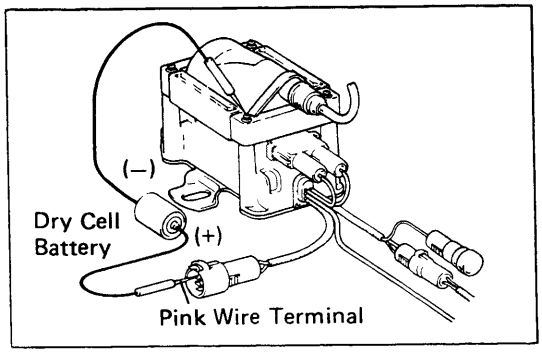

(c) Unplug the wiring connector from the distributor.

(d) Using a dry cell battery (1.5 V), connect the positive (+) pole of the battery to the pink wire terminal and the negative (−) pole to the white wire terminal.

CAUTION: Do not apply voltage more than 5 seconds to avoid destroying the power transistor in the igniter.

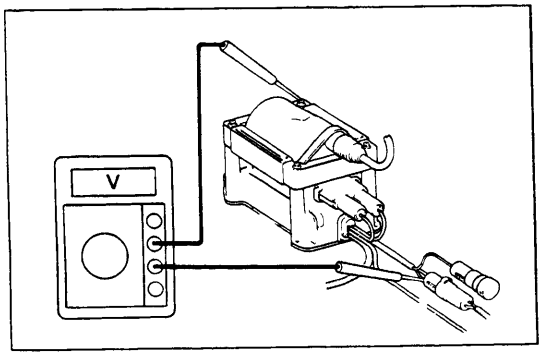

(e) Using a voltmeter, connect the positive (+) probe to the yellow connector for the igniter side and the negative (−) probe to body ground.

Voltage: 8 — 10 V

If a problem is found, replace the igniter.

4. **TURN IGNITION SWITCH OFF**

5. **REMOVE TEST EQUIPMENT AND RECONNECT WIRING**

[FOR 22R-E]
INSPECTION OF IGNITION COIL

1. DISCONNECT HIGH TENSION WIRE

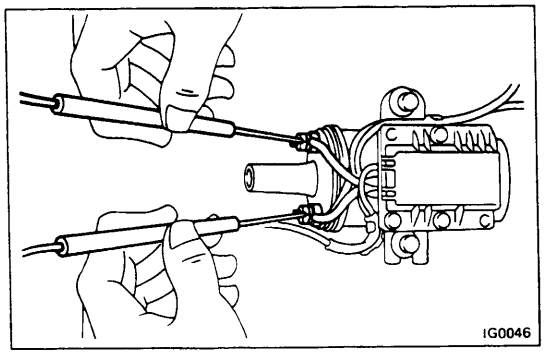

2. MEASURE PRIMARY COIL RESISTANCE

Using an ohmmeter, measure the resistance between the positive (+) and negative (−) terminals.

Primary coil resistance (cold): 0.5 — 0.7 Ω

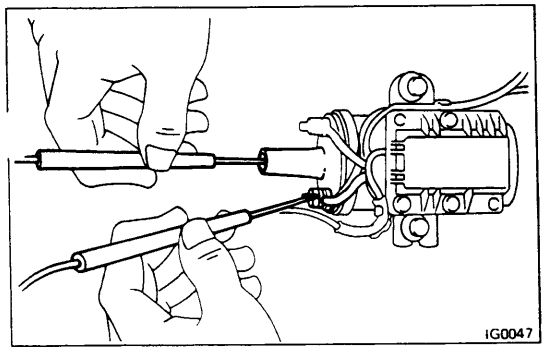

3. MEASURE SECONDARY COIL RESISTANCE

Using an ohmmeter, measure the resistance between the positive (+) terminal and high-tension terminal.

Secondary coil resistance (cold): 11.4 — 15.6 kΩ

INSPECTION OF IGNITER

1. **TURN IGNITION SWITCH ON**

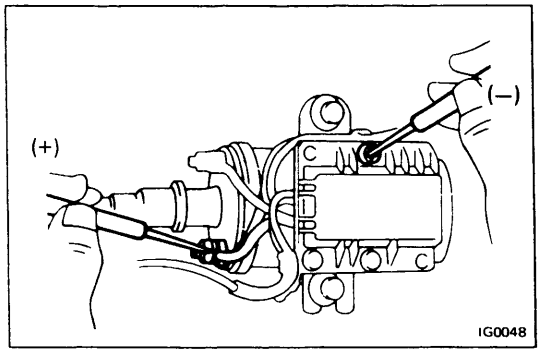

2. **CHECK POWER SOURCE LINE VOLTAGE**

Using a voltmeter, connect the positive (+) probe to the ignition coil positive (+) terminal and the negative (−) probe to body ground.

Voltage: Approx. 12V

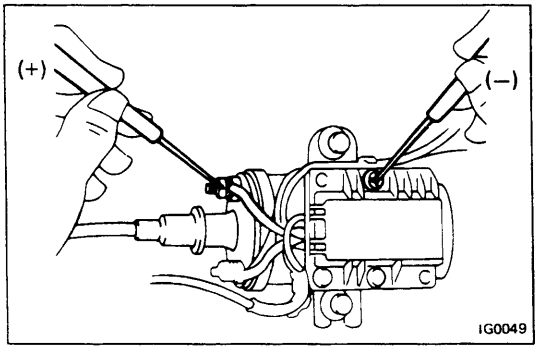

3. **CHECK POWER TRANSISTOR IN IGNITER**

(a) Using a voltmeter, connect the positive (+) probe to the ignition coil negative (−) terminal and the negative (−) probe to body ground.

Voltage: Approx. 12V

(b) Unplug the wiring connector from the distributor.

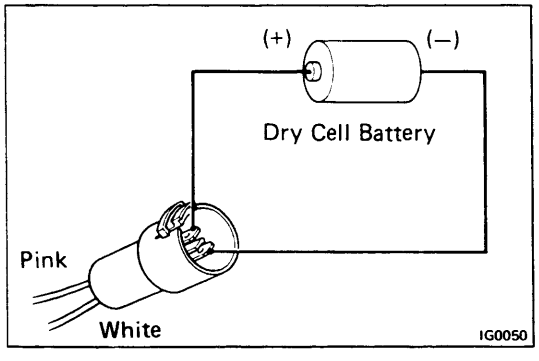

(c) Using a dry cell battery (1.5V), connect the positive (+) pole of the battery to the pink wire terminal and the negative (−) pole to the white wire terminal.

CAUTION: Do not apply voltage more than 5 seconds to avoid destroying the power transistor in the igniter.

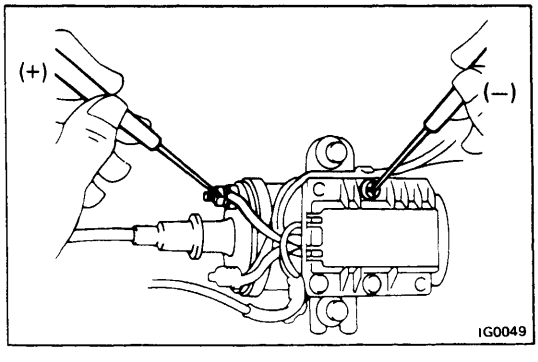

(d) Using a voltmeter, connect the positive (+) probe to the ignition coil negative (−) terminal and the negative (−) probe to the body ground.

(e) Check the voltage reading.

Voltage: 5 — 8V

If a problem is found, replace the igniter.

4. **TURN IGNITION SWITCH OFF**

5. **REMOVE TEST EQUIPMENT AND RECONNECT WIRING**

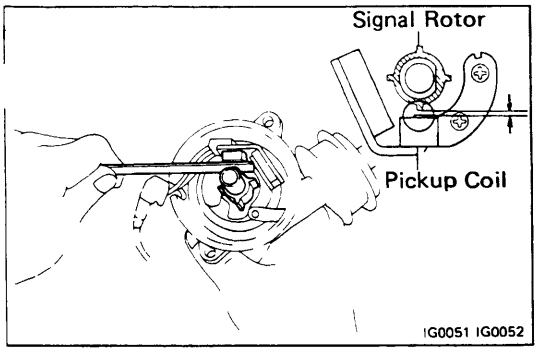

ON-VEHICLE INSPECTION OF DISTRIBUTOR

1. CHECK AIR GAP

(a) Using a feeler gauge, measure the gap between the signal rotor and the pickup coil projection.

Air gap: 0.2 — 0.4 mm (0.008 — 0.016 in.)

(b) Adjust the gap if necessary.

- Loosen the two screws and move the signal generator until the gap is correct. Tighten the screws and recheck the gap.

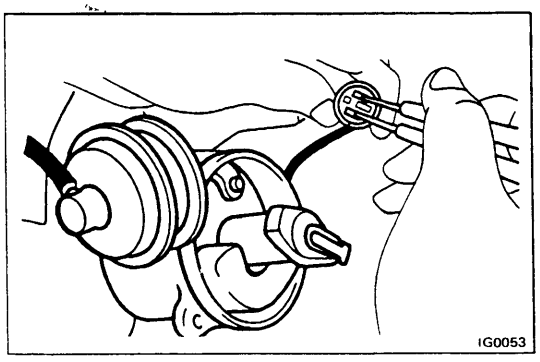

2. CHECK SIGNAL GENERATOR

Using an ohmmeter, check the resistance of the signal generator.

Generator resistance: 140 — 180Ω

If the resistance is not correct, replace the signal generator.

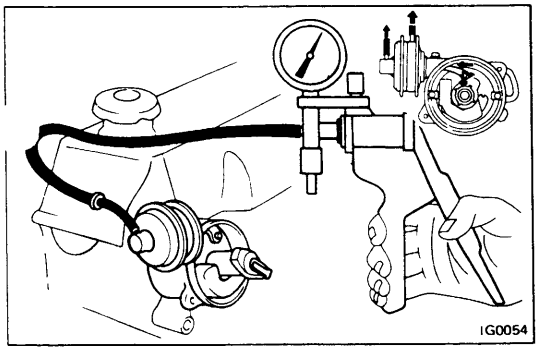

3. CHECK VACUUM ADVANCE (FOR 22R)

(a) Disconnect the vacuum hose and connect a vacuum pump to the diaphragms.

(b) Apply vacuum and check that the vacuum advance moves.

If the vacuum advance does not work, repair or replace as necessary.

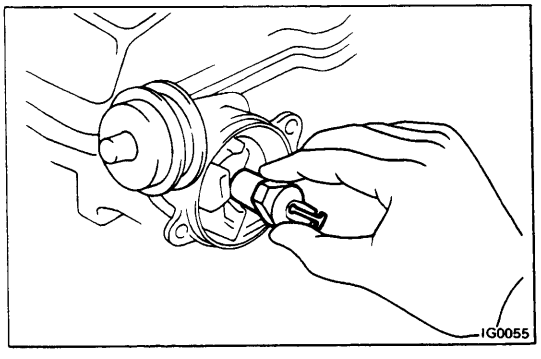

4. CHECK GOVERNOR ADVANCE (FOR 22R)

(a) Turn the rotor shaft clockwise, release it and check that the rotor returns slightly counterclockwise.

(b) Check that the rotor shaft is not excessively loose.

DISTRIBUTOR

REMOVAL OF DISTRIBUTOR

1. DISCONNECT VACUUM HOSES (FOR 22R), HIGH TENSION CORDS AND WIRING CONNECTOR
2. REMOVE TWO SCREWS AND PULL OFF DISTRIBUTOR CAP
3. REMOVE HOLD-DOWN BOLT AND PULL OUT DISTRIBUTOR

INSTALLATION OF DISTRIBUTOR

1. INSTALL DISTRIBUTOR AND SET TIMING

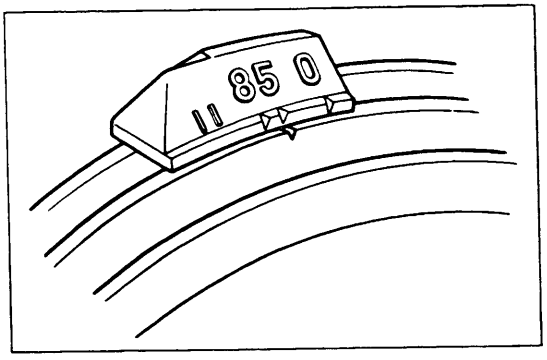

(a) Turn the crankshaft pulley until the timing mark is aligned with 0° TDC (22R) and 5° BTDC (22R-E) mark.

NOTE: Check that the rocker arms on the No.1 cylinder are loose. If not, turn the crankshaft one full turn.

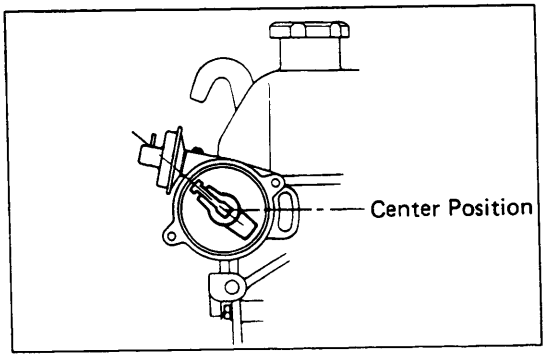

(b) Temporarily install the rotor.

(c) Begin insertion of the distributor with the rotor pointing upward and the distributor mounting hole approximately at center position of the bolt hole.

(d) When fully installed, the rotor will rotate to the position shown.

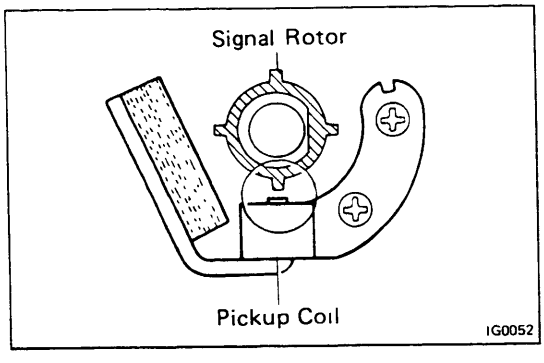

(e) Align the rotor tooth with the pickup coil projection.

(f) Coat the distributor set bolt with sealer and install the bolt. Torque the bolt.

Torque: 220 kg-cm (16 ft-lb, 22 N·m)

(g) Install the rotor and distributor cap with wires.

2. INSTALL FOLLOWING PARTS:

(a) Vacuum hoses (for 22R)

(b) Wiring connector

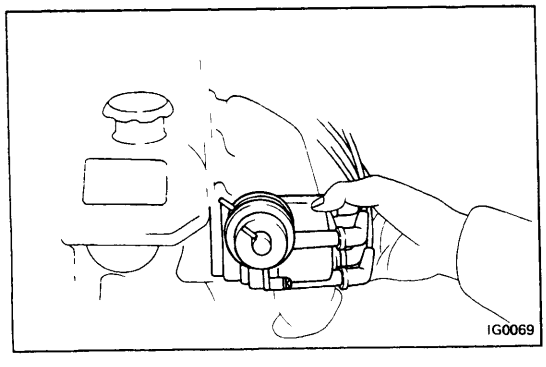

3. ADJUST IGNITION TIMING

(a) Connect a timing light to the engine.

(b) Start the engine and run it at idle.

(c) Using a timing light, slowly turn the distributor until the timing mark on the crankshaft pulley is aligned with the 12° mark. Tighten the distributor bolt.

(d) Recheck the ignition timing.

Ignition timing: 22R 0° TDC (Max. 950 rpm) (w/vacuum advance cut)
22R-E 5° BTDC at idle (short terminal "T")

STARTING SYSTEM

	Page
TROUBLESHOOTING	ST-2
STARTER	ST-3

ST

TROUBLESHOOTING

Problem	Possible cause	Remedy	Page
Engine will not crank	Battery charge low	Check battery specific gravity Charge or replace battery	CH-3
	Battery cables loose, corroded or worn	Repair or replace cables	
	Neutral start switch faulty (A/T)	Replace switch	
	Fusible link blown	Replace fusible link	
	Starter faulty	Repair starter	ST-3
	Ignition switch faulty	Replace ignition switch	
Engine cranks slowly	Battery charge low	Check battery specific gravity Charge or replace battery	CH-3
	Battery cables loose, corroded or worn	Repair or replace cables	
	Starter faulty	Repair starter	ST-3
Starter keeps running	Starter faulty	Repair starter	ST-3
	Ignition switch faulty	Replace ignition switch	
	Short in wiring	Repair wiring	
Starter spins — engine will not crank	Pinion gear teeth broken or faulty starter	Repair starter	ST-3
	Flywheel teeth broken	Replace flywheel	

STARTER

COMPONENTS

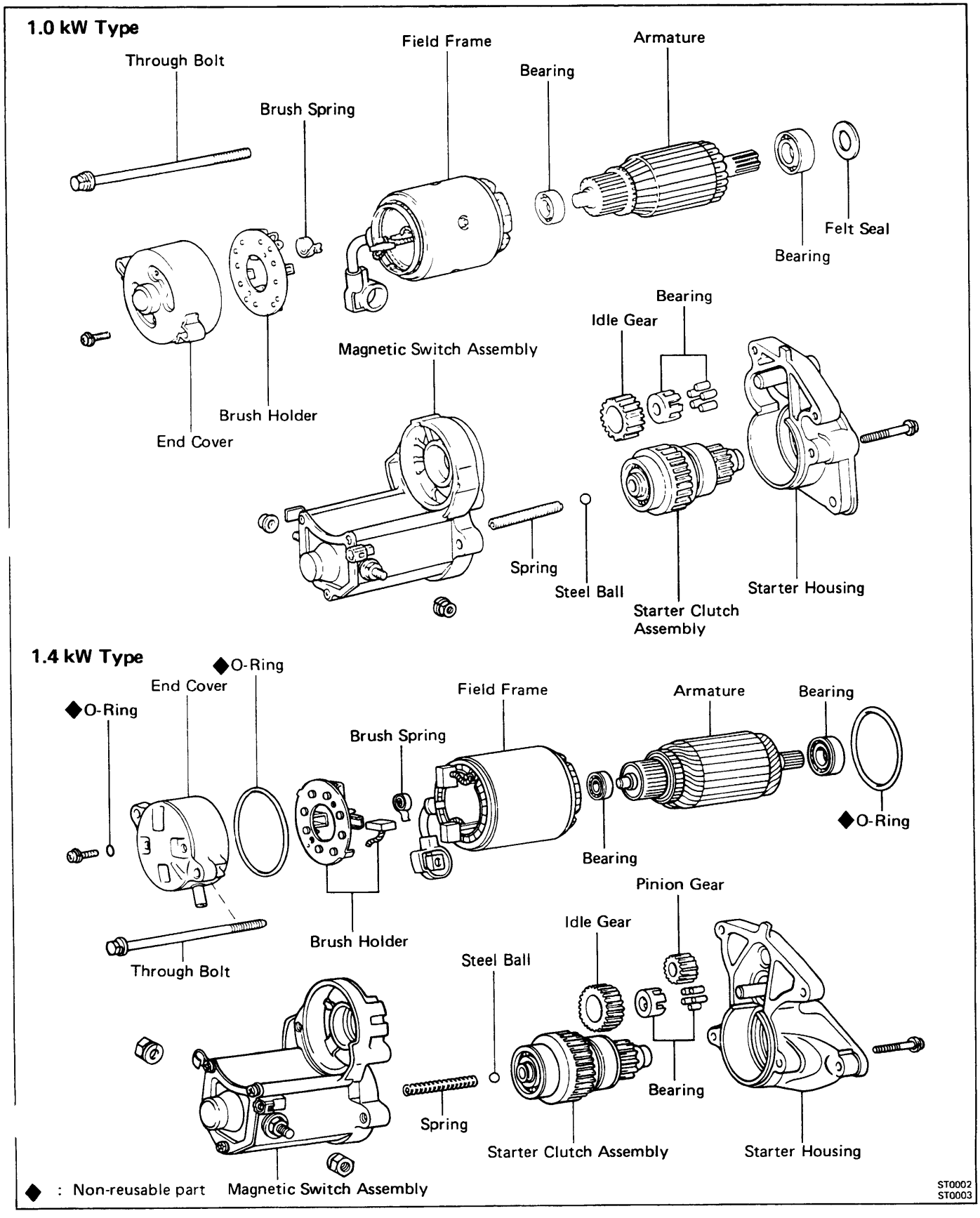

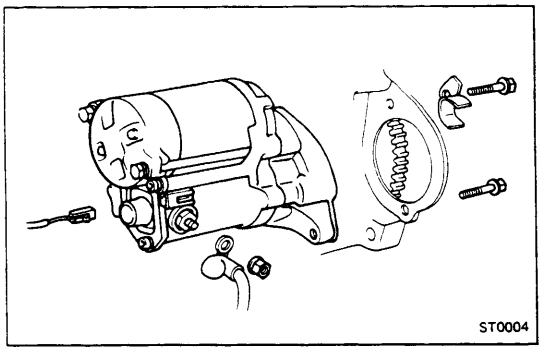

REMOVAL OF STARTER

1. **DISCONNECT CABLE FROM NEGATIVE TERMINAL BETTERY**

2. **REMOVE TRANSMISSION OIL FILLER TUBE (A/T only)**

3. **DISCONNECT TWO WIRES FROM STARTER**

   Remove the nut and disconnect the battery cable from the magnetic switch on the starter motor. Disconnect the other wire from terminal 50.

4. **REMOVE STARTER MOTOR**

   Remove the two bolts, and remove the starter motor from the flywheel bellhousing.

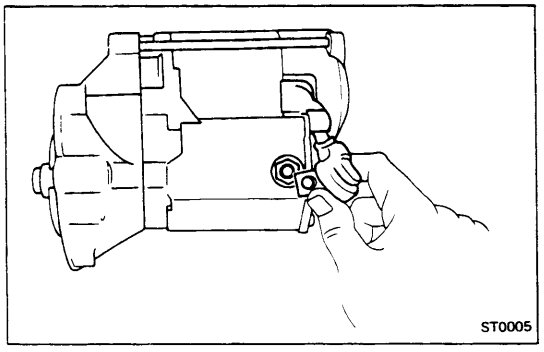

DISASSEMBLY OF STARTER

(See page ST-3)

1. **REMOVE FIELD FRAME WITH ARMATURE FROM MAGNETIC SWITCH ASSEMBLY**

   (a) Disconnect the lead wire from the magnetic switch terminal.

   (b) Remove the two through bolts. Pull out the field frame with the armature from the magnetic switch assembly.

   (c) Remove the felt seal. (1.0 kW type only)

   (d) Remove the O-ring. (1.4 kW type only)

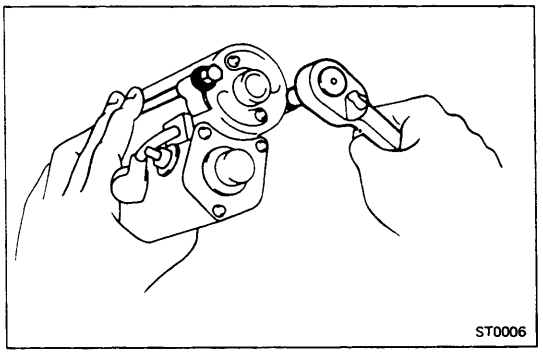

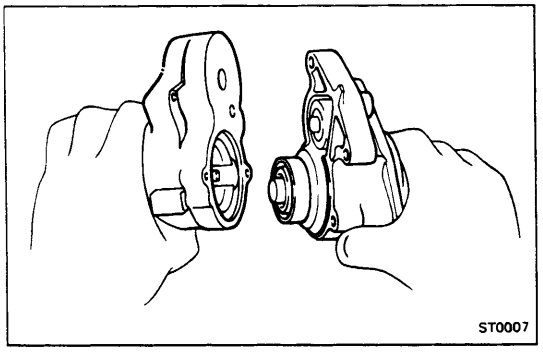

2. **REMOVE STARTER HOUSING FROM MAGNETIC SWITCH ASSEMBLY**

   [1.0 kW type]
   Remove the two screws and remove the starter housing with the idler gear and clutch assembly.

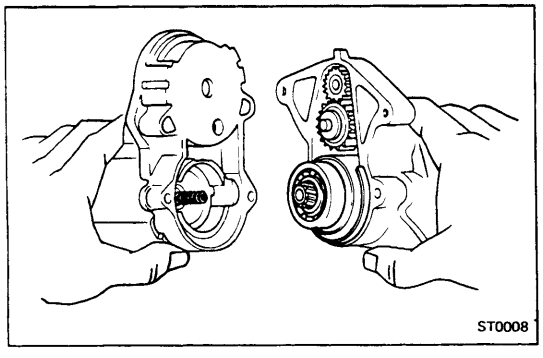

[1.4 kW type]
Remove the two screws and remove the starter housing with the pinion gear, idler gear and clutch assembly.

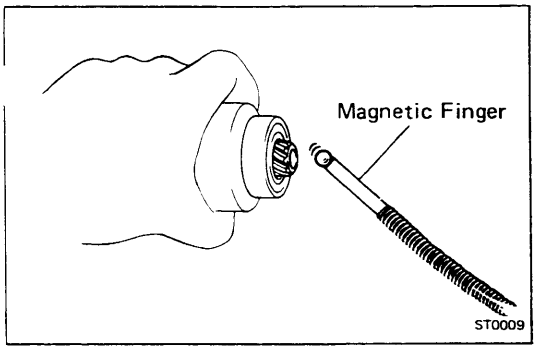

3. **REMOVE CLUTCH ASSEMBLY AND GEARS FROM STARTER HOUSING**

4. **REMOVE STEEL BALL AND SPRING**

Using a magnetic finger, remove the spring and steel ball from the clutch shaft hole.

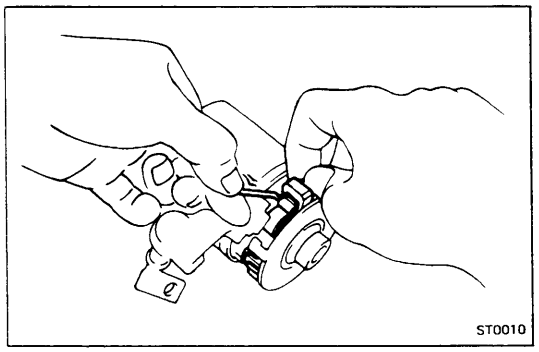

5. **REMOVE BRUSHES AND BRUSH HOLDER**

(a) Remove the end cover from the field frame.

(b) Remove the O-ring (1.4 kW type only).

(c) Using a screwdriver or steel wire, separate the brush springs, and remove the brushes from the brush holder.

(d) Pull the brush holder off the field frame.

6. **REMOVE ARMATURE FROM FIELD FRAME**

INSPECTION OF STARTER

Armature Coil

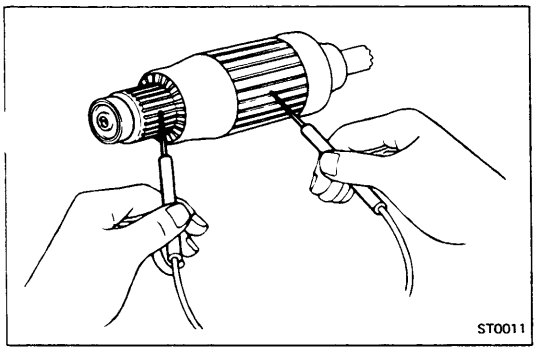

1. **INSPECT THAT COMMUTATOR IS NOT GROUNDED**

Using an ohmmeter, check that there is no continuity between the commutator and armature coil core.

If there is continuity, replace the armature.

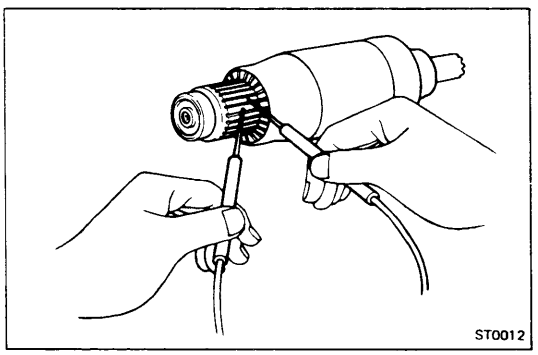

2. **INSPECT COMMUTATOR FOR OPEN CIRCUIT**

Using an ohmmeter, check for continuity between the segments of the commutator.
If there is no continuity between any segment, replace the armature.

Commutator

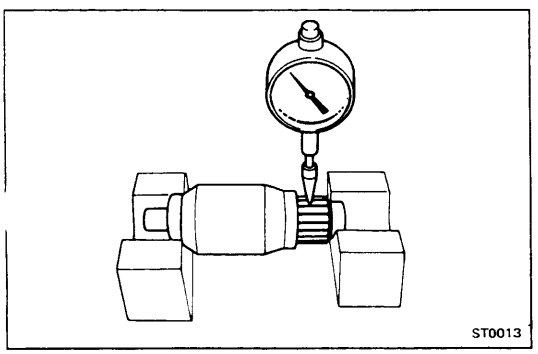

1. **INSPECT COMMUTATOR FOR DIRTY AND BURNT SURFACES**

If the surface is dirty or burnt, correct with sandpaper (No. 400) or a lathe.

2. **INSPECT COMMUTATOR CIRCLE RUNOUT**

If the circle runout is greater than the maximum, correct with a lathe.

Maximum circle runout: 0.05 mm (0.0020 in.)

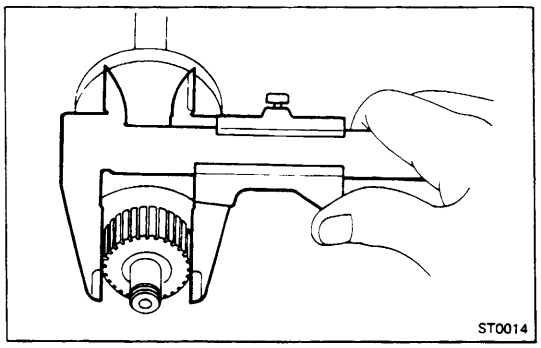

3. MEASURE DIAMETER OF COMMUTATOR

If the diameter of the commutator is less than the minimum replace the armature.

Standard diameter: 30 mm (1.18 in.)
Minimum diameter: 29 mm (1.14 in.)

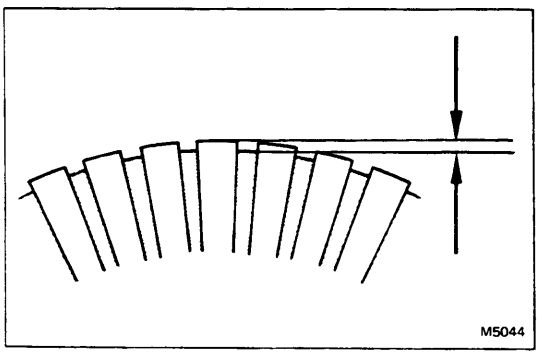

4. INSPECT UNDERCUT DEPTH

Check that the undercut depth is clean and free of foreign particles. Smooth out the edge.

If the undercut depth is less than the minimum, correct it with a hacksaw blade.

Standard undercut depth: 0.5 — 0.8 mm (0.020 — 0.031 in.)
Minimum undercut depth: 0.2 mm (0.008 in.)

Field Coil

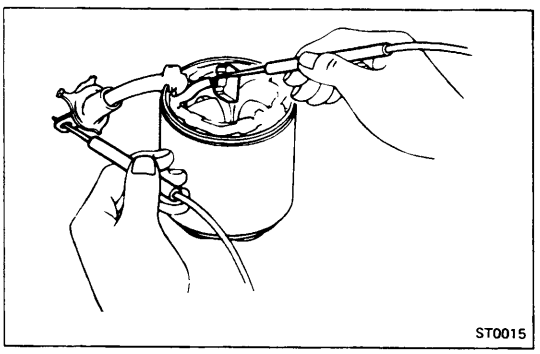

1. INSPECT FIELD COIL FOR OPEN CIRCUIT

Using an ohmmeter, check for continuity between the le wire and field coil brush lead.

If there is no continuity, replace the field frame.

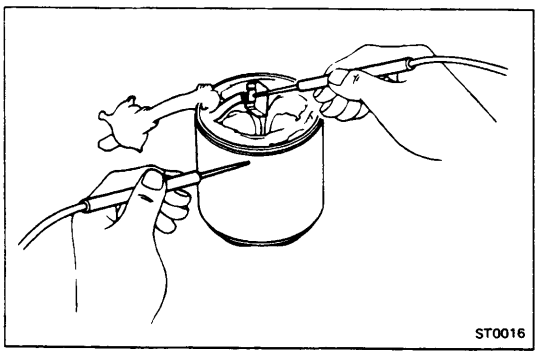

2. INSPECT THAT FIELD COIL IS NOT GROUNDED

Using an ohmmeter, check for continuity between the field coil end and field frame.

If there is continuity, replace the field frame.

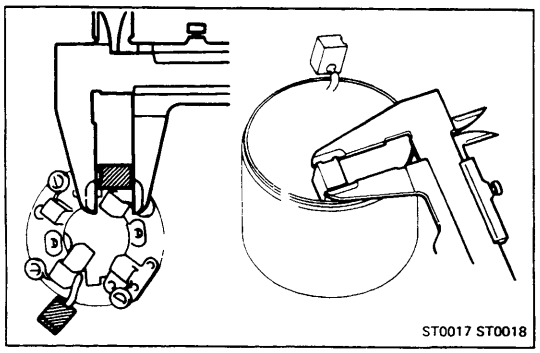

Brushes

MEASURE BRUSH LENGTH

If length is less than the minimum, replace the brush and dress with an emery cloth.

Standard length: 1.0 kW 13.0 mm (0.512 in.)
1.4 kW 15.0 mm (0.591 in.)
Minimum length: 1.0 kW 8.5 mm (0.335 in.)
1.4 kW 10.0 mm (0.394 in.)

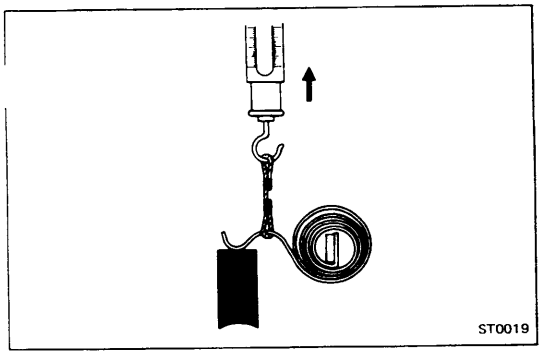

Brush Spring

MEASURE BRUSH SPRING LOAD WITH A PULL SCALE

If the reading is below standard, replace the brush spring.

Spring installed load: **1.785 — 2.415 kg (3.9 — 5.3 lb, 18 — 24 N)**

NOTE: Take the pull scale reading at the very instant the brush spring separates from the brush.

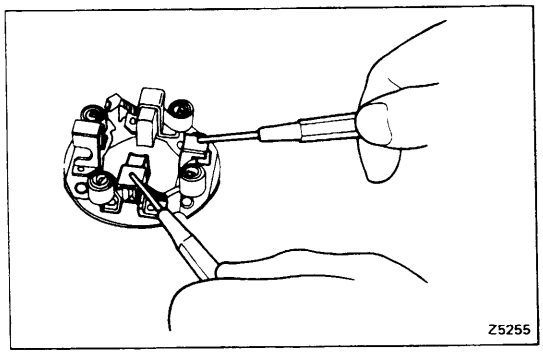

Brush Holder

INSPECT INSULATION OF BRUSH HOLDER

Using an ohmmeter, check for continuity between the positive and negative brush holders.

If there is continuity, repair or replace the brush holder.

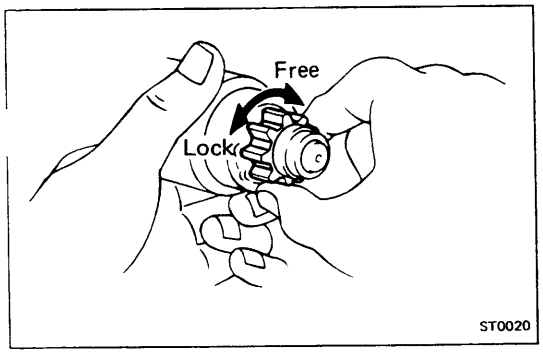

Clutch and Gears

1. **INSPECT GEAR TEETH**

Check the gear teeth on the pinion gear, idler gear and clutch assembly for wear or damage. Replace if damaged. If damaged, also check the flywheel ring gear for wear or damage.

2. **INSPECT CLUTCH**

Rotate the pinion clockwise and check that it turns freely. Try to rotate the pinion counterclockwise and check that it locks.

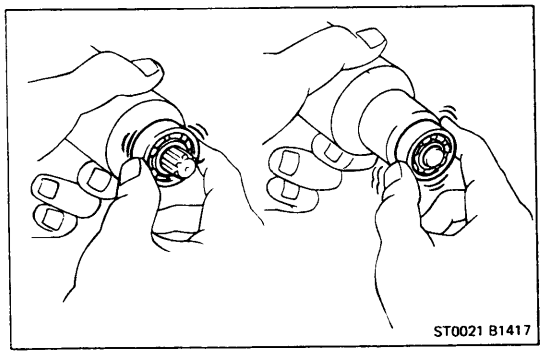

Bearings

1. **INSPECT BEARINGS**

Turn each bearing by hand while applying inward force.

If resistance is felt or if the bearing sticks, replace the bearing.

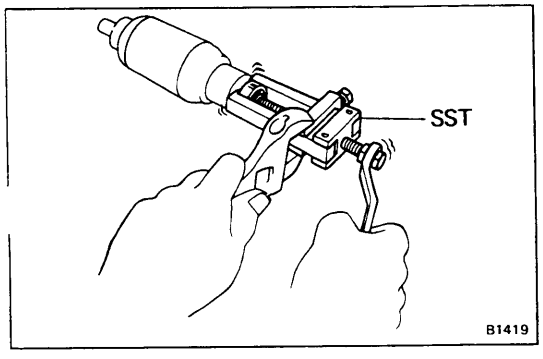

2. **IF NECESSARY, REPLACE BEARINGS**

(a) Using SST, remove the bearing from the armature shaft.

(b) Using SST, remove the other bearing on the opposite side.

SST 09286-46011

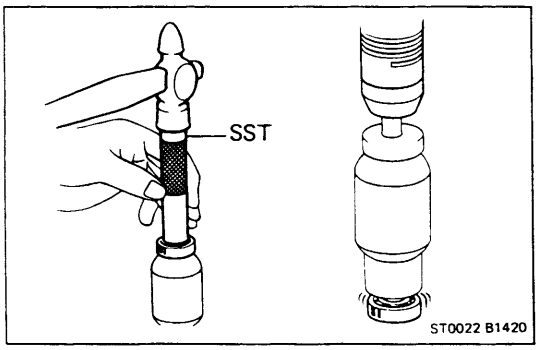

(c) Using SST and a hammer, tap a new large bearing onto the shaft.

SST 09285-76010

(d) Using a press, install a new small bearing onto the shaft.

Magnetic Switch

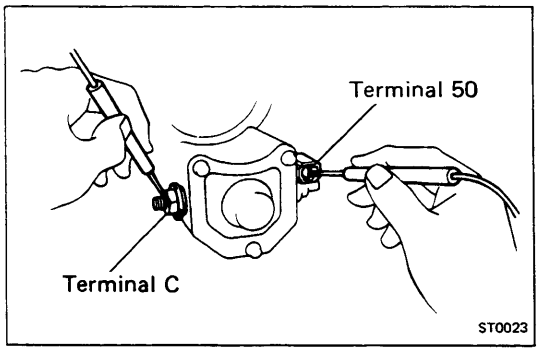

1. PERFORM PULL-IN COIL OPEN CIRCUIT TEST

Using an ohmmeter, check for continuity between terminal 50 and terminal C.

If there is no continuity, replace the magnetic switch.

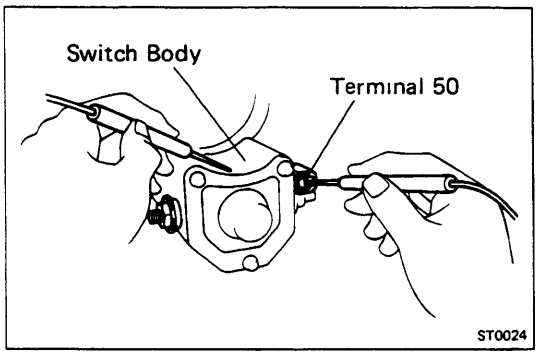

2. PERFORM HOLD-IN COIL OPEN CIRCUIT TEST

Using an ohmmeter, check for continuity between terminal 50 and the switch body.

If there is no continuity, replace the magnetic switch

ASSEMBLY OF STARTER

(See page ST-3)

NOTE: Use high-temperature grease to lubricate the bearings and gears when assembling the starter.

1. PLACE ARMATURE INTO FIELD FRAME

Apply grease to the armature bearings and insert the armature into the field frame.

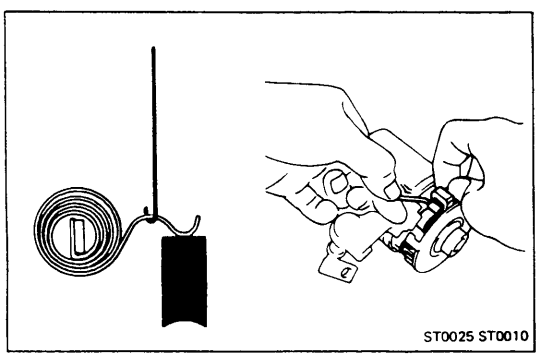

2. INSTALL BRUSH HOLDER AND BRUSHES

(a) Using a screwdriver or steel wire, hold the brush spring back, and install the brush into the brush holder. Install four brushes.

NOTE: Make sure that the positive lead wires are not grounded.

(b) Place the O-ring on the field frame (1.4 kW type only).

(c) Install the end cover to the field frame.

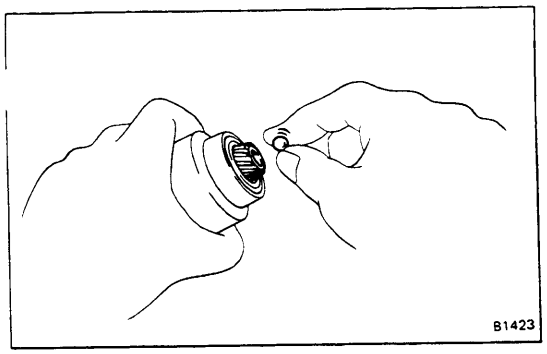

3. INSERT STEEL BALL INTO CLUTCH SHAFT HOLE

Apply grease to the ball and spring, and insert them into the clutch shaft hole.

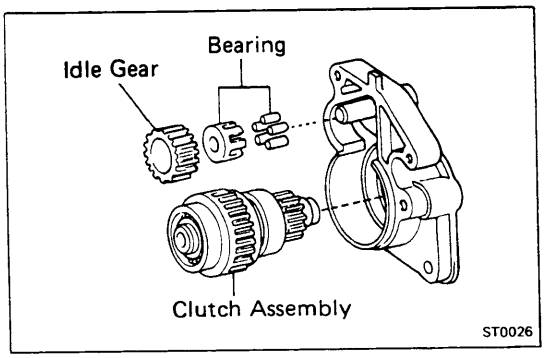

4. INSTALL GEARS AND CLUTCH ASSEMBLY TO STARTER HOUSING

[1.0 kW type]

(a) Apply grease to the gear and clutch assembly.

(b) Place the clutch assembly, idle gear and bearing in the starter housing.

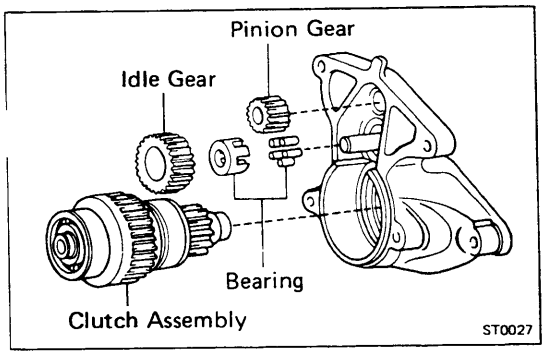

[1.4 kW type]

(a) Apply grease to the gears and clutch assembly.

(b) Place the clutch assembly, idle gear, bearing and pinion gear in the starter housing.

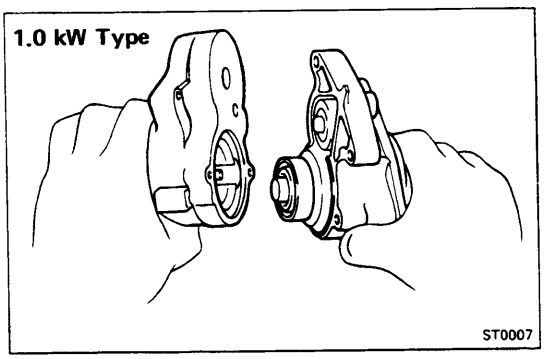

5. INSTALL STARTER HOUSING

(a) Insert the spring into the clutch shaft hole.

(b) Place the starter housing on the magnetic switch and install the two screws.

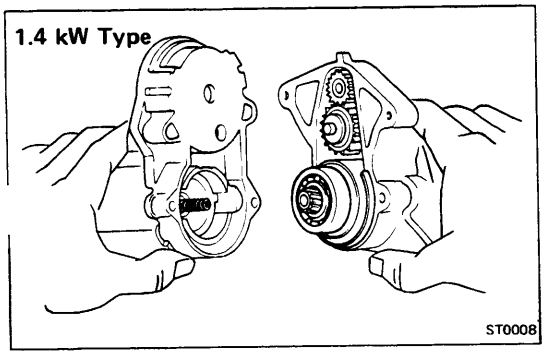

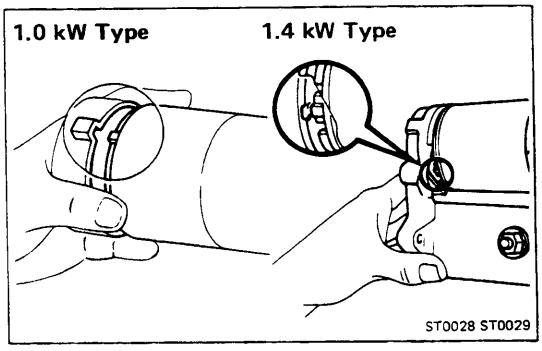

6. **INSTALL FIELD FRAME WITH ARMATURE IN MAGNETIC SWITCH ASSEMBLY**

(a) Place the felt seal on the armature shaft (1.0 kW type only).

(b) Place the O-ring on the field frame (1.4 kW type only).

(c) Match the protrusion of the field frame with the magnetic switch assembly.

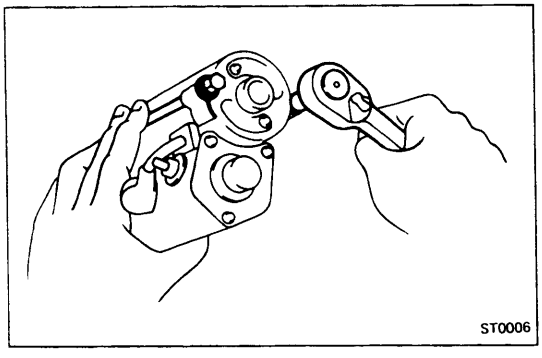

(d) Install the two through bolts.

(e) Connect the coil lead to the terminal on the magnetic switch assembly.

PERFORMANCE TEST OF STARTER

CAUTION: These tests must be performed within 3 to 5 seconds to avoid burning out the coil.

1. **PERFORM PULL-IN TEST**

(a) Disconnect the field coil lead from terminal C.

(b) Connect the battery to the magnetic switch as shown. Check that the plunger moves outward. If the plunger does not move, replace the magnetic switch.

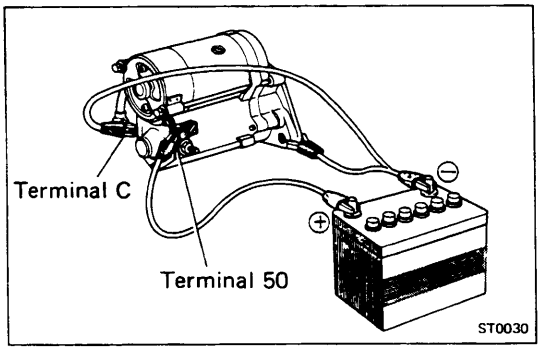

2. **PERFORM HOLD-IN TEST**

While connected as above with the plunger out, disconnect the negative lead from terminal C. Check that the plunger remains out.

If the plunger returns inward, replace the magnetic switch.

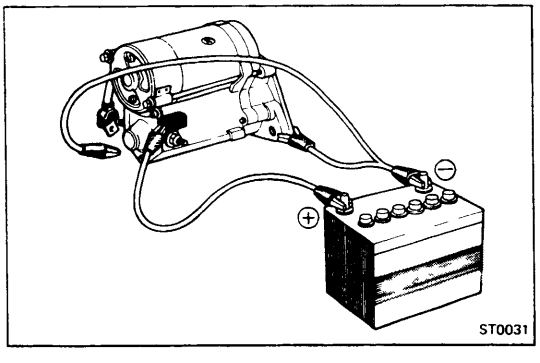

3. **INSPECT PLUNGER RETURN**

Disconnect the negative lead from the switch body. Check that the plunger returns inward.

If the plunger does not return, replace the magnetic switch.

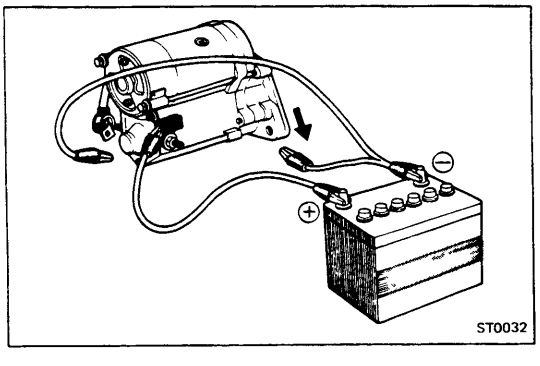

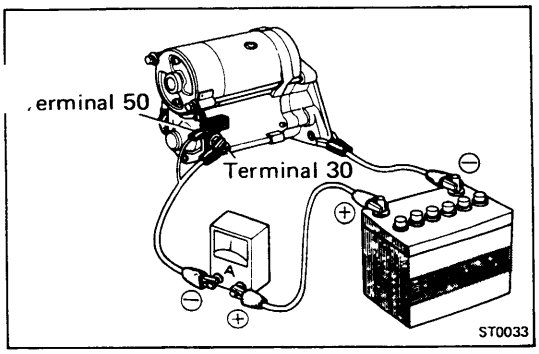

4. **PERFORM NO-LOAD PERFORMANCE TEST**

   (a) Connect the battery and ammeter to the starter as shown.

   (b) Check that the starter rotates smoothly and steadily with the pinion moving out. Check that the ammeter reads the specified current.

   Specified current: Less than 90 A at 11.5 V

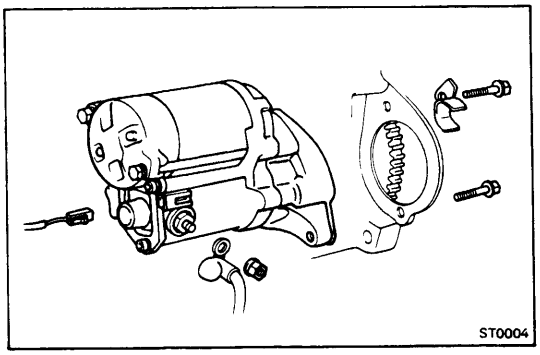

INSTALLATION OF STARTER

1. **INSTALL STARTER MOTOR IN FLYWHEEL BELL-HOUSING**

   Place the starter motor in the flywheel bellhousing. Install and torque the two bolts.

   Torque: 400 kg-cm (29 ft-lb, 39 N·m)

2. **CONNECT TWO WIRES TO STARTER**

   Connect the connector to the terminal on the magnetic switch. Connect the cable from the battery to the terminal on the switch, and install the nut.

3. **INSTALL TRANSMISSION OIL FILLER TUBE (A/T only)**

4. **CONNECT CABLE TO NEGATIVE TERMINAL OF BATTERY**

   Check that the car starts.

CHARGING SYSTEM

	Page
PRECAUTIONS	CH-2
TROUBLESHOOTING	CH-2
ON-VEHICLE INSPECTION	CH-3
ALTERNATOR	CH-5

PRECAUTIONS

1. **Check that the battery cables are connected to the c rect terminals.**
2. **Disconnect the battery cables when the battery is given a quick charge.**
3. **Do not perform tests with a high voltage insulation resistance tester.**
4. **Never disconnect the battery when the engine is running.**

TROUBLESHOOTING

Problem	Possible cause	Remedy	Page
Discharge warning light does not light with ignition ON and engine off	Fuse blown	Check "CHARGE" and "IGN" fuses	
	Light burned out	Replace light	
	Wiring connection loose	Tighten loose connections	
	IC regulator faulty	Replace IC regulator	CH-6
Discharge warning light does not go out with engine running (battery requires frequent recharging)	Drive belt loose or worn	Adjust or replace drive belt	CH-3
	Battery cables loose, corroded or worn	Repair or replace cables	
	Fuse blown	Check "ENGINE" fuse	
	Fusible link blown	Replace fusible link	
	IC regulator or alternator faulty	Check charging system	CH-4
	Wiring faulty	Repair wiring	

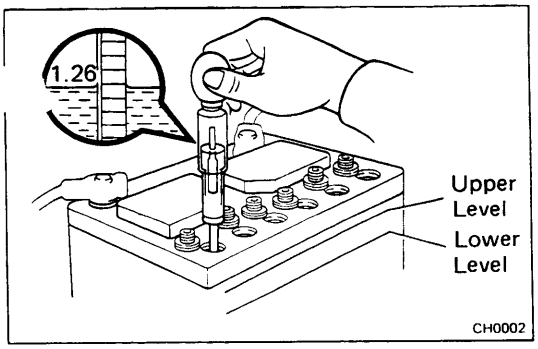

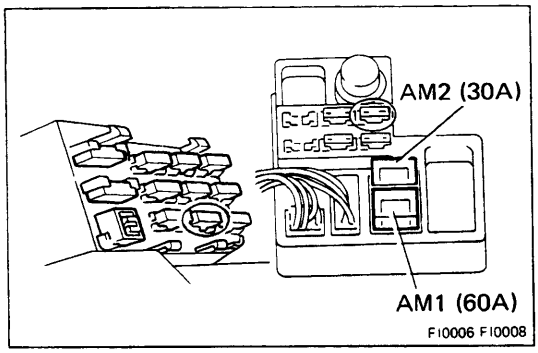

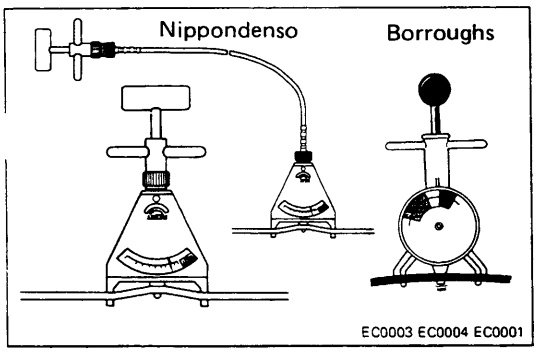

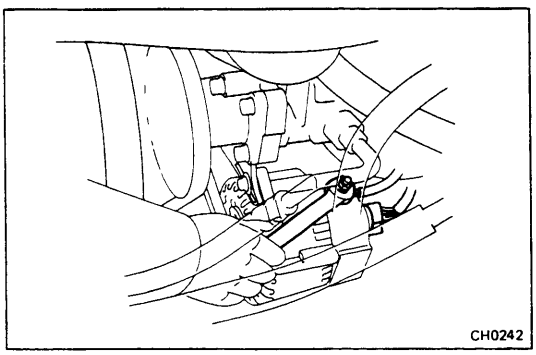

ON-VEHICLE INSPECTION

1. CHECK BATTERY SPECIFIC GRAVITY AND ELECTROLYTE LEVEL

(a) Check the specific gravity of each cell.

Standard specific gravity
When fully charged at 20°C (68°F): 1.25 — 1.27

(b) Check the electrolyte quantity of each cell.

If insufficient, refill with distilled water (or purified water).

2. CHECK BATTERY TERMINALS, FUSIBLE LINK AND FUSES

(a) Check that the battery terminals are not loose or corroded.

(b) Check the fusible link and fuses for continuity.

FUSIBLE LINK AM1, AM2
Fuse ENGINE (15A)
Fuse CHARGE (7,5A)

4. INSPECT DRIVE BELT

(a) Visually check the drive belt for crack, oiliness or wear. Check that the belt does not touch the bottom of the pulley groove.
If necessary, replace the drive belt.

(b) Using a belt tension gauge, check the drive belt tension.

Belt tension gauge:
Nippondenso BTG-20 (95506-00020) or
Borroughs No. BT-33-73F

Drive belt tension:
New belt 125 ± 25 lb
Used belt 80 ± 20 lb

If necessary, adjust the drive belt tension.

5. VISUALLY CHECK ALTERNATOR WIRING AND LISTEN FOR ABNORMAL NOISES

(a) Check that the wiring is in good condition.

(b) Check that there is no abnormal noise from the alternator while the engine is running.

6. CHECK DISCHARGE WARNING LIGHT CIRCUIT

(a) Warm up the engine and then turn it off.

(b) Turn off all accessories.

(c) Turn the ignition switch to ON. Check that the discharge warning light is lit.

(d) Start the engine. Check that the light goes out.

If the light does not come on and go off as specified, troubleshoot the warning light circuit.

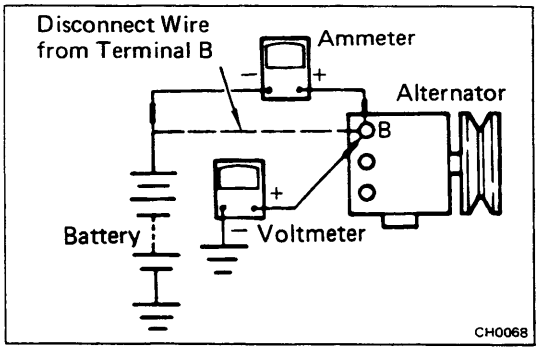

7. CHECK CHARGING CIRCUIT WITHOUT LOAD

NOTE: If a battery/alternator tester is available, connect the tester to the charging circuit according to the manufacturer's instructions.

(a) If a tester is not available, connect a voltmeter and ammeter to the charging circuit as follows:

- Disconnect the wire from terminal B of the alternator and connect it to the negative terminal of the ammeter.
- Connect the test lead from the positive terminal of the ammeter to terminal B of the alternator.
- Connect the positive lead of the voltmeter to terminal B of the alternator.
- Connect the negative lead of the voltmeter to ground.

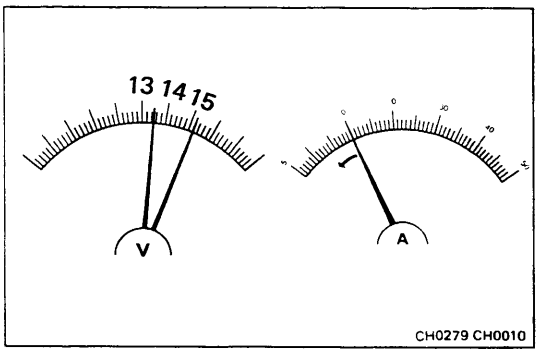

(b) Check the charging circuit as follows:

With the engine running from idling to 2,000 rpm, check the reading on the ammeter and voltmeter.

Standard amperage: Less than 10 A
Standard voltage: 13.5 — 15.1 V
(Regulator case 25°C or 77°F)

- If the voltage reading is greater than standard voltage, replace the IC regulator.

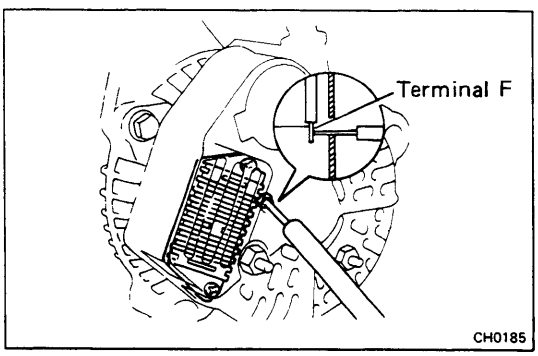

- If the voltage reading is less than standard voltage, check the IC regulator and alternator as follows: With terminal F grounded, start the engine and check the voltage reading of terminal B.
- If the voltage reading is greater than standard voltage, replace the IC regulator.
- If the voltage reading is less than standard voltage, check the alternator.

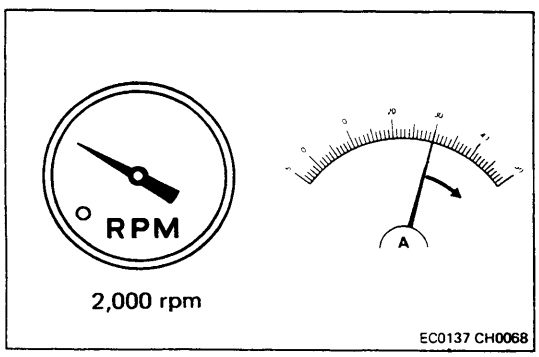

8. CHECK CHARGING CIRCUIT WITH LOAD

(a) With the engine running at 2,000 rpm, turn on the high beam headlights and place the heater fan control switch at HI.

(b) Check the reading on the ammeter.

Standard amperage: More than 30 A

If the ammeter reading is less than 30 A, repair the alternator. (See page CH-5)

NOTE: With the battery fully charged, sometimes the indication will be less than 30 A.

ALTERNATOR

REMOVAL OF ALTERNATOR

1. **DISCONNECT CABLE FROM NEGATIVE TERMINAL OF BATTERY**

2. **DRAIN COOLANT**

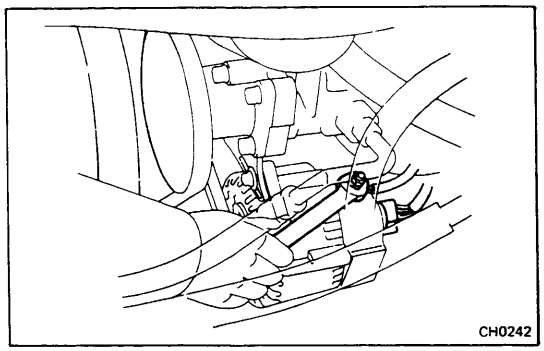

3. **DISCONNECT WIRING FROM ALTERNATOR**
   (a) Disconnect the connector from the alternator.
   (b) Remove the nut and wire from the alternator.

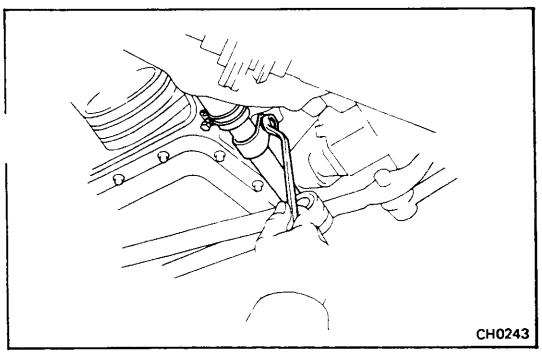

4. **DISCONNECT WATER INLET HOSE**
   (a) Remove the engine under cover.
   (b) Remove the two water inlet pipe bolts.
   (c) Disconnect the water inlet hose from the engine.

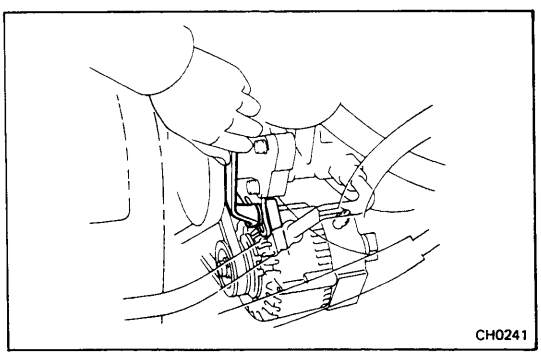

5. **REMOVE FAN BELT**
   (a) Loosen the alternator pivot and remove the adjust bolt.
   (b) Remove the fan belt.

6. **REMOVE ALTERNATOR**
   (a) Hold the alternator and remove the pivot.
   (b) Remove the alternator.

COMPONENTS

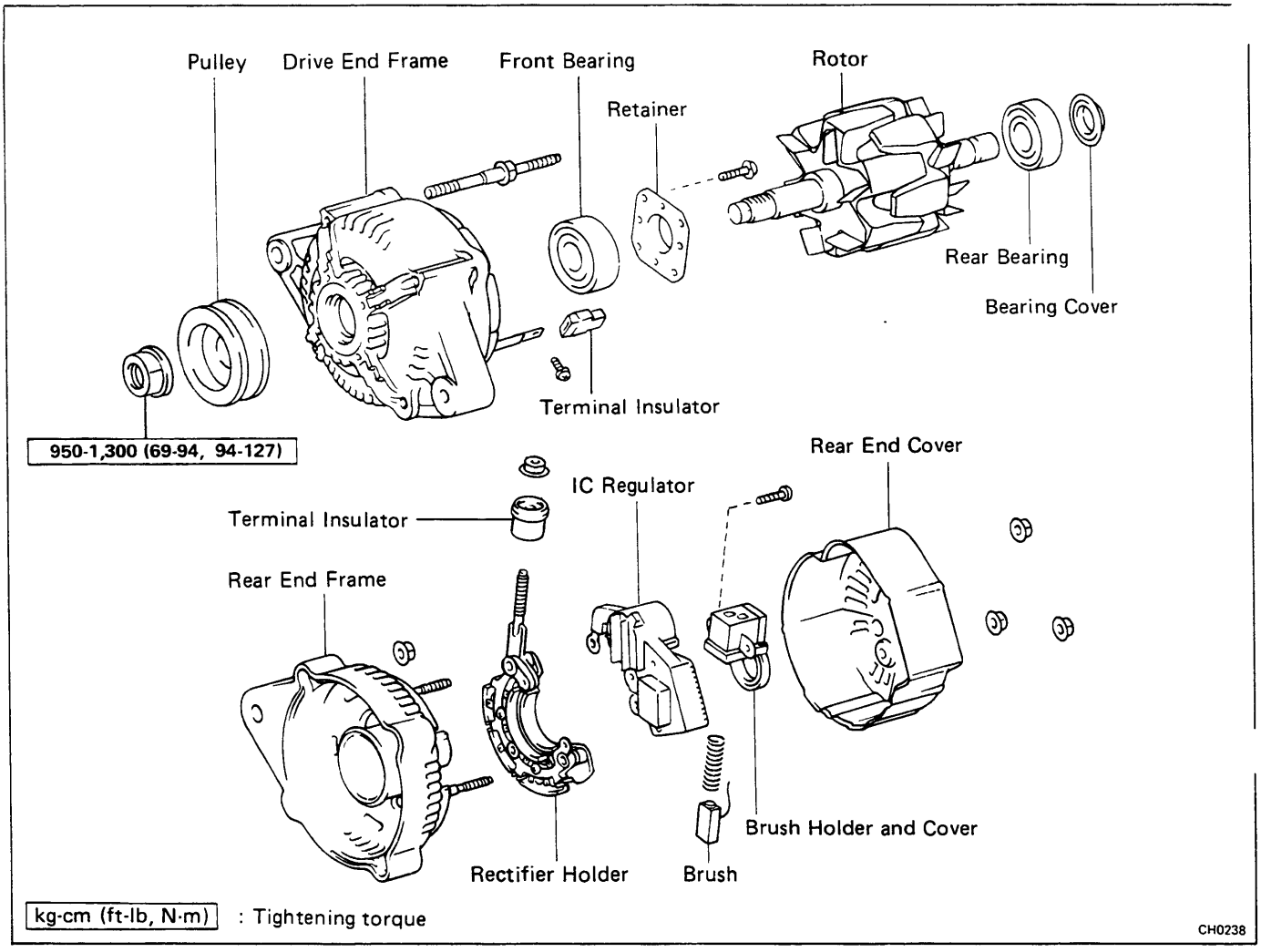

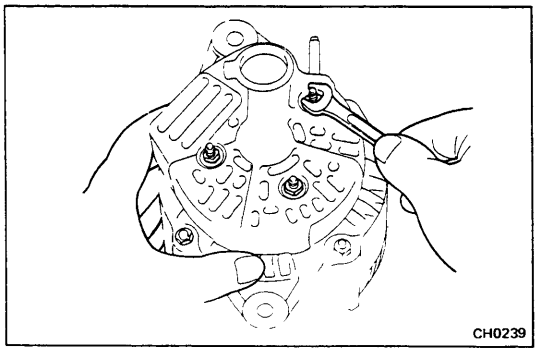

DISASSEMBLY OF ALTERNATOR

1. REMOVE REAR END COVER

(a) Remove the nut and terminal insulator.

(b) Remove the three nuts and end cover.

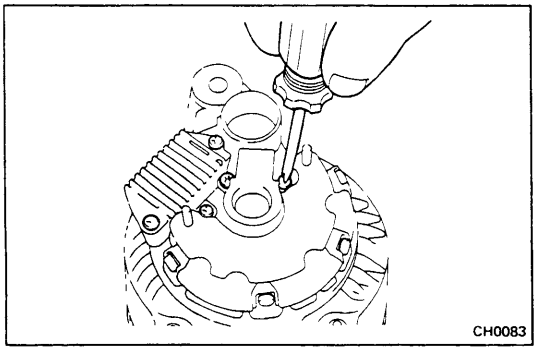

2. REMOVE BRUSH HOLDER

Remove the two screws, brush holder and brush holder cover.

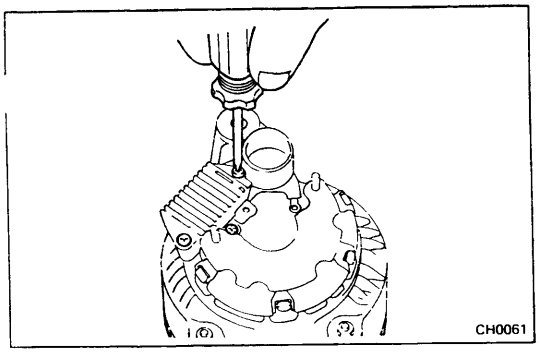

3. REMOVE IC REGULATOR

Remove the three screws and IC regulator.

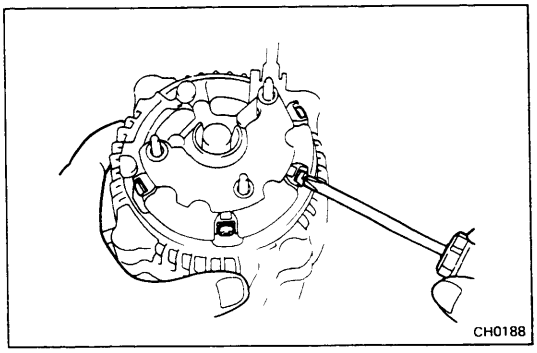

4. REMOVE RECTIFIER HOLDER

Remove the four screws and rectifier holder.

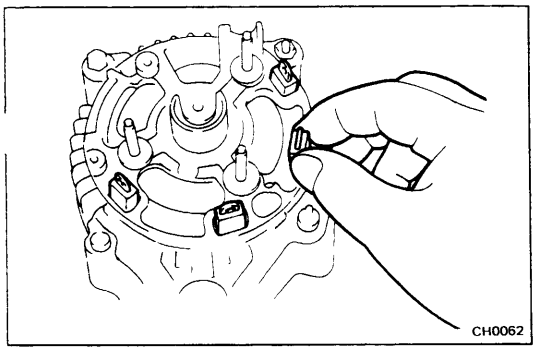

5. REMOVE TERMINAL INSULATOR

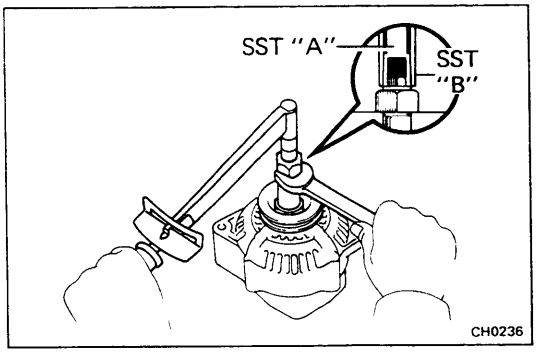

6. REMOVE PULLEY

(a) Hold SST "A" with a torque wrench and tighten SST "B" clockwise to the specified torque.

SST 09820-63010

Torque: 400 kg-cm (29 ft-lb, 39 N·m)

(b) Confirm that SST "A" is secured to the pulley shaft.

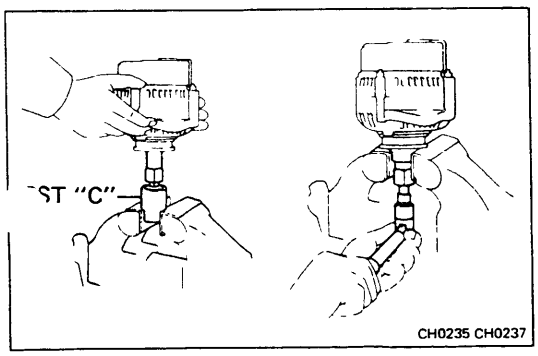

(c) As shown in the figure, grip SST "C" in a vise and then install the alternator to SST "C".

(d) To loosen the pulley nut turn SST "A" in the direction shown in the figure.

CAUTION: To prevent damage to the rotor shaft, do not loosen the pulley nut more than one-half of a turn.

(e) Turn SST "B" and remove all SSTs.

(f) Remove the pulley nut and the pulley.

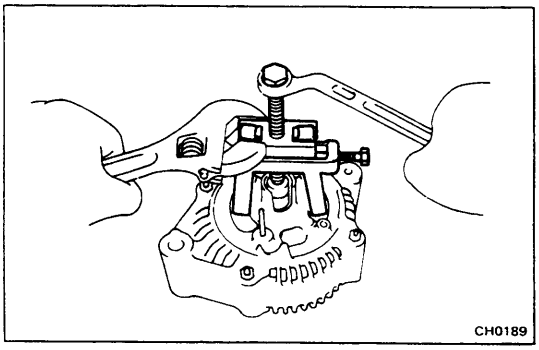

7. REMOVE REAR END FRAME

(a) Remove the four nuts.

(b) Using SST, remove the rear end frame and four ... minal insulators.

SST 09286-46011

8. REMOVE ROTOR FROM DRIVE END FRAME

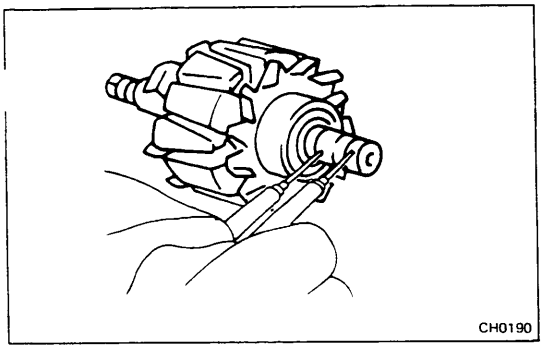
CH0190

INSPECTION AND REPAIR OF ALTERNATOR

Rotor

1. CHECK ROTOR FOR OPEN CIRCUIT

Using an ohmmeter, check for continuity between the slip rings.

Standard resistance: 2.8 — 3.0 Ω

If there is no continuity, replace the rotor.

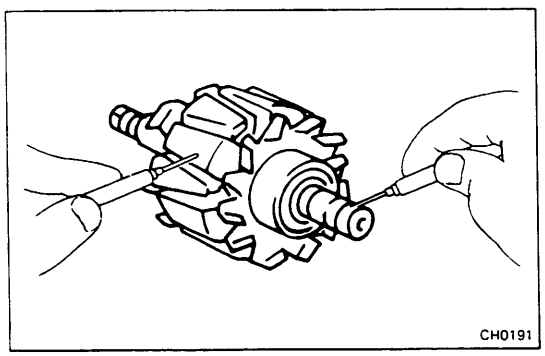
CH0191

2. CHECK ROTOR FOR GROUND

Using an ohmmeter, check that there is no continuity between the slip ring and the rotor. If there is continuity, replace the rotor.

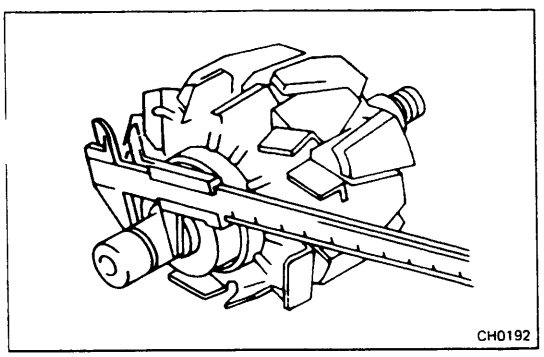
CH0192

3. INSPECT SLIP RINGS

(a) Check that the slip rings are not rough or scored. If rough or scored, replace the rotor.

(b) Using calipers, measure the slip ring diameter.

If the diameter of the slip ring is less than the minimum, replace the rotor.

Minimum diameter: 14.0 mm (0.551 in.)
Standard diameter: 14.4 mm (0.567 in.)

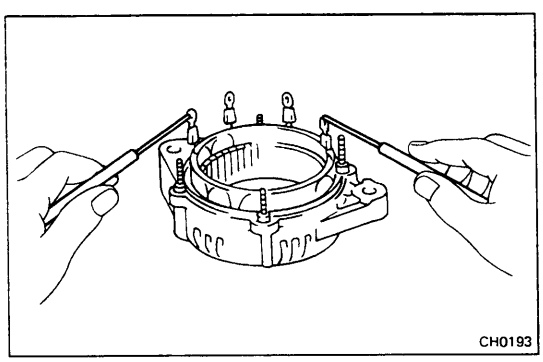
CH0193

Stator

1. INSPECT STATOR FOR OPEN CIRCUIT

Using an ohmmeter, check all leads for continuity. If there is no continuity, replace the drive end frame assembly.

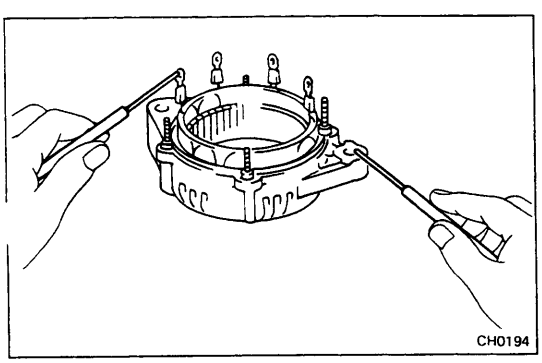
CH0194

2. INSPECT THAT STATOR IS NOT GROUNDED

Using an ohmmeter, check that there is no continuity between the coil leads and drive end frame. If there is continuity, replace the drive end frame assembly.

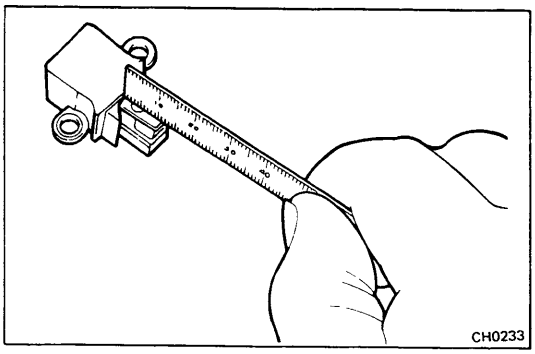

Brush and Brush Holder

1. **MEASURE EXPOSED BRUSH LENGTH**

Minimum exposed length: 4.5 mm (0.177 in.)

If the brush length is less than the minimum, replace the brush.

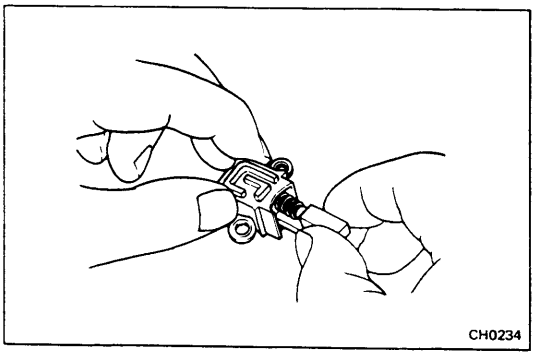

2. **IF NECESSARY, REPLACE BRUSH**

(a) Unsolder and remove the brush and the spring.

(b) Put the brush wire through the spring and insert the brush holder.

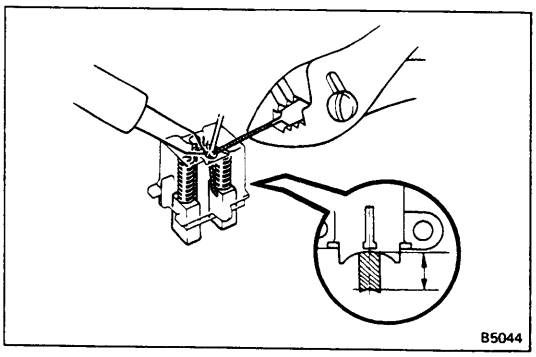

(c) Solder the wire to the brush holder as shown.

Standard exposed length: 10.5 mm (0.413 in.)

(d) Check that the brush moves smoothly in the brush holder.

(e) Cut off any excess wire.

Bearings

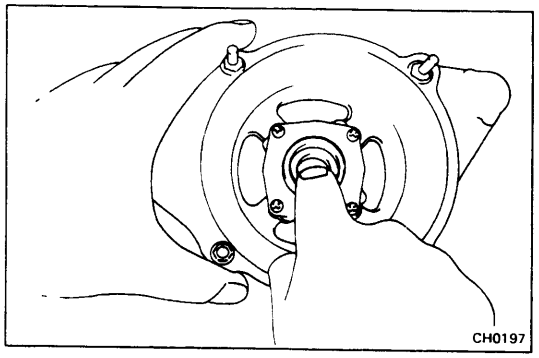

1. **INSPECT FRONT BEARING**

Check that the front bearing is not rough or worn. Replace if necessary.

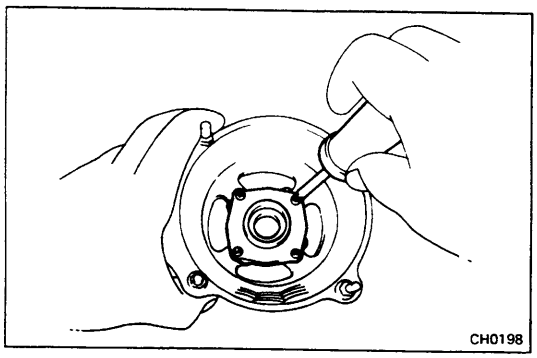

2. **IF NECESSARY, REPLACE FRONT BEARING**

Remove the four screws and bearing retainer, and replace the front bearing.

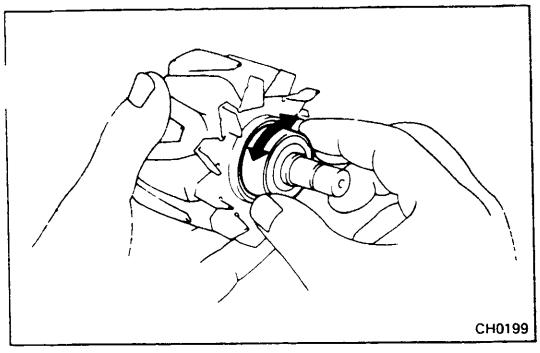

3. **INSPECT REAR BEARING**

Check that the rear bearing is not rough or worn. Replace if necessary.

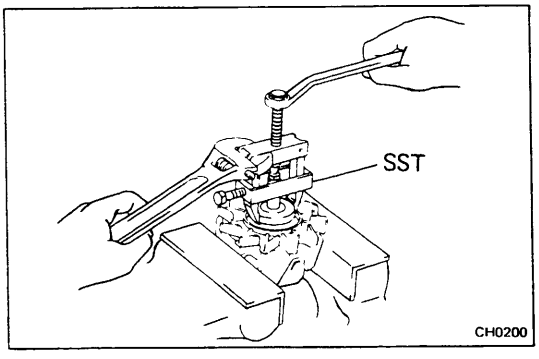

4. **IF NECESSARY, REPLACE REAR BEARING**

(a) Using SST, remove the rear bearing with the bearing cover from the rotor shaft.

SST 09820-00020

CAUTION: Be careful not to damage the fan.

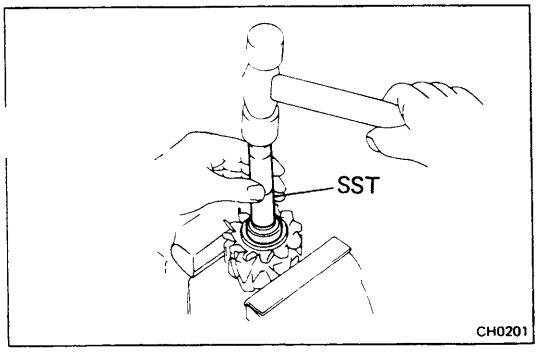

(b) Using SST, install the rear bearing and bearing cover onto the rotor shaft.

SST 09285-76010

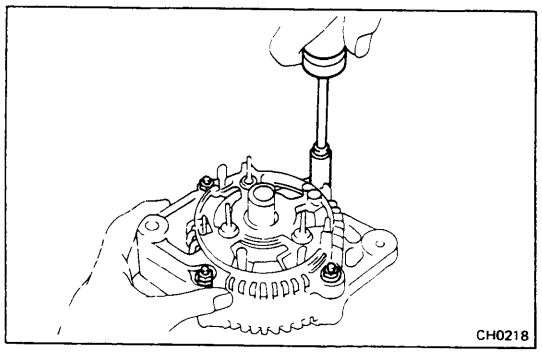

ASSEMBLY OF ALTERNATOR

(See page CH-6)

1. INSTALL ROTOR TO DRIVE END FRAME

2. INSTALL REAR END FRAME

(a) Using a plastic hammer, lightly tap the rear end frame on the drive end frame.

(b) Install the four nuts.

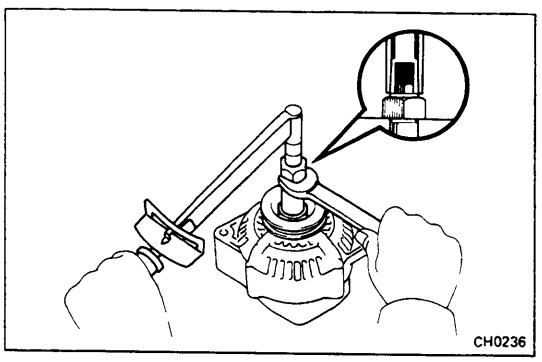

3. INSTALL PULLEY

(a) Install the pulley to the rotor shaft by tightening the pulley nut by hand.

(b) Hold SST "A" with a torque wrench and tighten SST "B" clockwise to the specified torque.

SST 09820-63010

Torque: 400 kg-cm (29 ft-lb, 39 N·m)

(c) Confirm that SST "A" is secured to the pulley shaft.

(d) As shown in the figure, grip SST "C" in a vise and then install the alternator to SST "C".

(e) To torque the pulley nut turn SST "A" in the direction shown in the figure.

Torque: 950 — 1,300 kg-cm
(69 — 94 ft-lb, 94 — 127 N·m)

(f) Turn SST "B" and remove all SSTs.

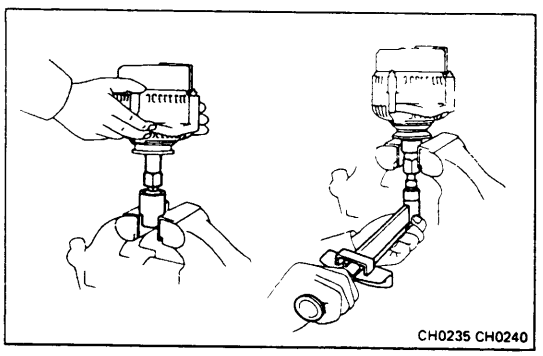

4. INSTALL FOUR TERMINAL INSULATORS

Install the four terminal insulators on the lead wires.

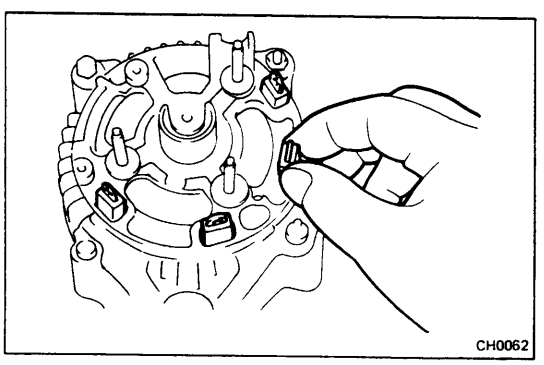

5. INSTALL RECTIFIER HOLDER

Install the rectifier holder with the four screws.

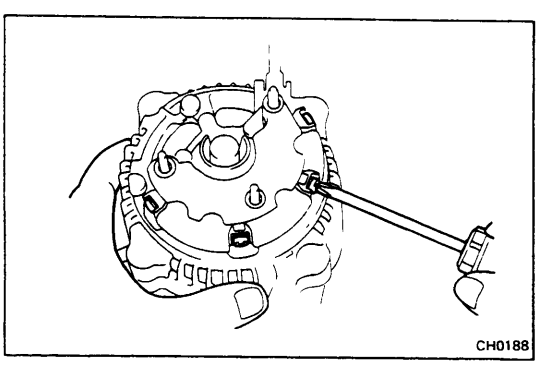

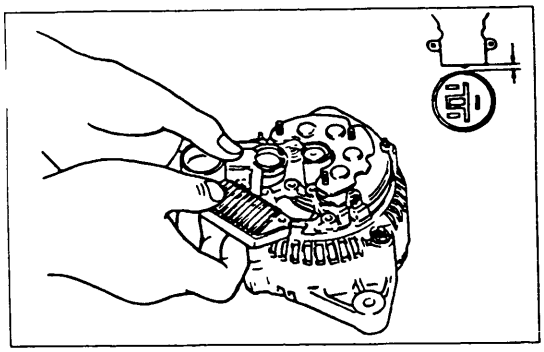

6. INSTALL BRUSH HOLDER WITH IC REGULATOR

(a) Install the brush holder with IC regulator.

(b) Install the two screws to IC regulator.

NOTE: Check the clearance between the brush holder and connector as 1 mm or more.

(c) Install the three screws.

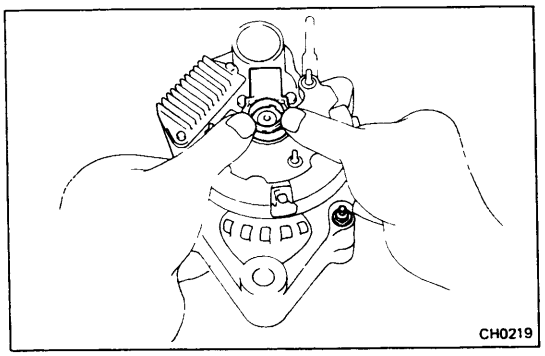

(d) Install the brush holder cover to the rear end frame.

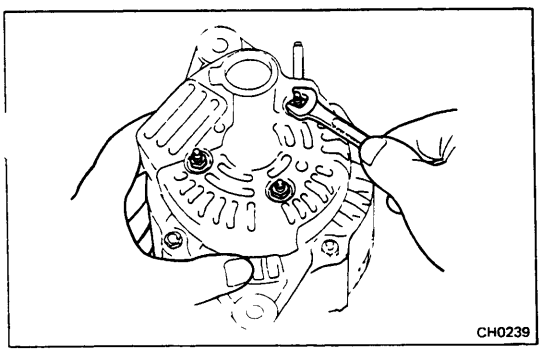

7. INSTALL REAR END COVER

(a) Install the end cover with the three nuts.

(b) Install the terminal insulator with the nut.

8. MAKE SURE ROTOR ROTATES SMOOTHLY

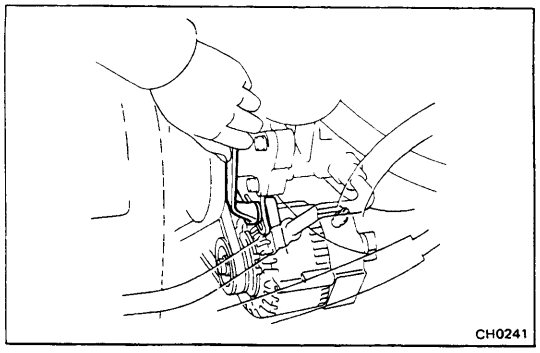

INSTALLATION OF ALTERNATOR

1. INSTALL ALTERNATOR

Mount the alternator on the bracket with the pivot and adjust bolt.

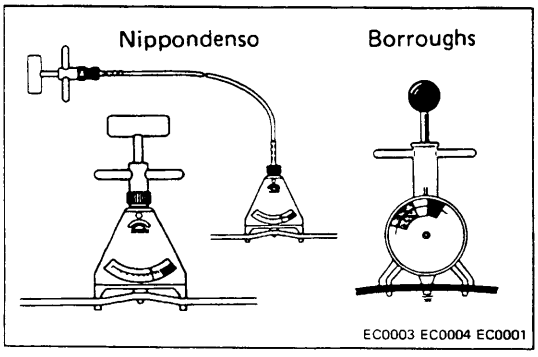

2. INSTALL DRIVE BELT

(a) Place the drive belt on the alternator, fan and crankshaft pulleys.

(b) Using a belt tension gauge, check the drive belt tension.

Belt tension gauge:
Nippondenso BTG-20 (95506-00020) or
Borroughs No. BT-33-73F

Drive belt tension:

New belt	**125 ± 25 lb**
Used belt	**80 ± 20 lb**

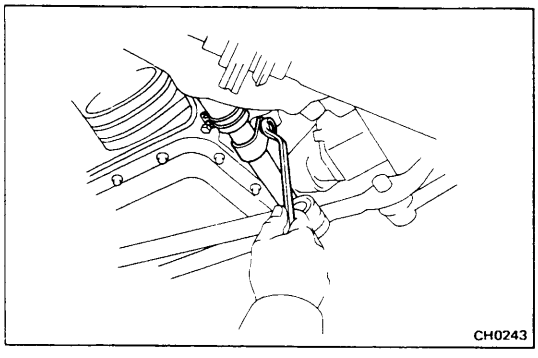

3. CONNECT WATER INLET HOSE

(a) Connect the water inlet hose to the engine.

(b) Install the two water inlet pipe bolts.

(c) Install the engine under cover.

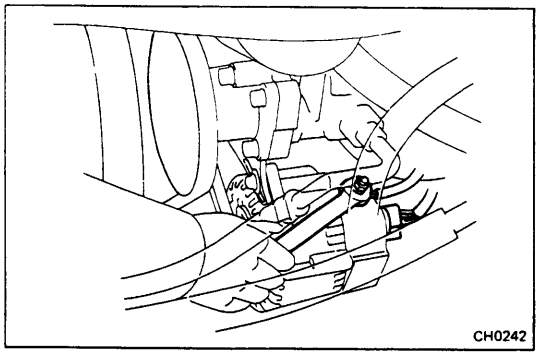

4. CONNECT WIRING TO ALTERNATOR

(a) Connect the wire to the alternator and install the nut.

(b) Connect the connector to the alternator.

5. FILL WITH COOLANT

Close the radiator drain cock and fill with coolant.

6. CONNECT NEGATIVE CABLE TO BATTERY

7. PERFORM ON-VEHICLE INSPECTION

(See page CH-3)

CLUTCH

	Page
TROUBLESHOOTING	CL-2
CHECK AND ADJUSTMENT OF CLUTCH PEDAL	CL-3
BLEEDING OF CLUTCH SYSTEM	CL-3
CLUTCH MASTER CYLINDER	CL-4
CLUTCH RELEASE CYLINDER	CL-5
CLUTCH UNIT	CL-7

TROUBLESHOOTING

Problem	Possible cause	Remedy	Page
Hard to shift or will not shift	Clutch pedal freeplay excessive	Adjust pedal freeplay	CL-3
	Air in clutch lines	Bleed clutch system	CL-3
	Clutch release cylinder faulty	Repair release cylinder	CL-5
	Clutch master cylinder faulty	Repair master cylinder	CL-4
	Clutch disc out of true, runout is excessive or lining broken	Inspect clutch disc	CL-8
	Splines on input shaft or clutch disc dirty or burred	Repair as necessary	CL-7
	Clutch pressure plate faulty	Replace pressure plate	CL-9
Transmission jumps out of gear	Clutch pilot bearing worn	Replace pilot bearing	CL-9
Clutch slips	Clutch pedal freeplay insufficient	Adjust pedal freeplay	CL-3
	Clutch disc lining oily or worn out	Inspect clutch disc	CL-8
	Pressure plate faulty	Replace pressure plate	CL-9
	Release fork binding	Inspect release fork	
Clutch grabs/chatters	Clutch disc lining oily or worn out	Inspect clutch disc	CL-8
	Pressure plate faulty	Replace pressure plate	CL-9
	Clutch diaphragm spring bent	Align clutch diaphragm	CL-11
	Engine mounts loose	Repair as necessary	
Clutch pedal spongy	Air in clutch lines	Bleed clutch system	CL-3
	Clutch release cylinder faulty	Repair release cylinder	CL-5
	Clutch master cylinder faulty	Repair master cylinder	CL-4
Clutch noisy	Loose part inside housing	Repair as necessary	
	Release bearing worn or dirty	Replace release bearing	CL-10
	Pilot bearing worn	Replace pilot bearing	CL-9
	Release fork or linkage sticking	Repair as necessary	

A01171

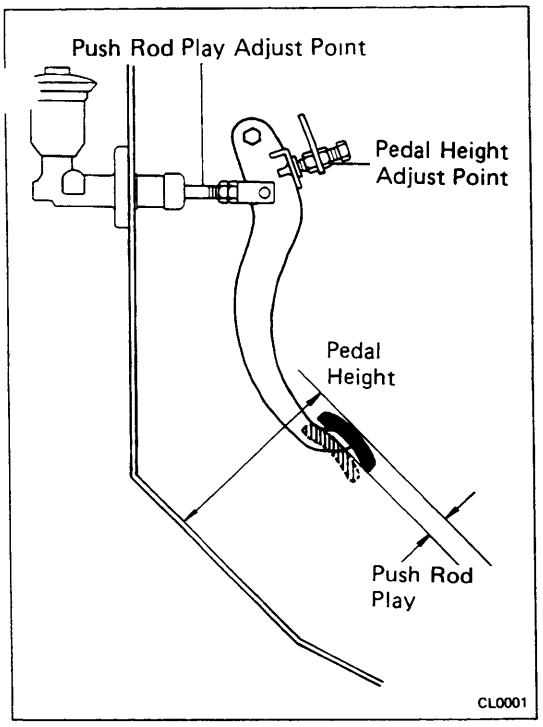

CHECK AND ADJUSTMENT OF CLUTCH PEDAL

1. CHECK THAT PEDAL HEIGHT AND PUSH ROD PLAY ARE CORRECT

Pedal height from asphalt sheet: 144 mm (5.67 in.)

Push rod play at pedal top: 1.0 — 5.0 mm (0.039 — 0.197 in.)

If incorrect, adjust the pedal height and push rod play.

2. IF NECESSARY, ADJUST PEDAL HEIGHT AND PUSH ROD PLAY

(a) Loosen the lock nut and turn the stopper bolt until the height is correct. Tighten the lock nut.

(b) Loosen the lock nut and turn the push rod until the push rod play is correct. Tighten the lock nut.

3. CHECK THAT PEDAL FREEPLAY IS CORRECT

Push in on the pedal until the beginning of clutch resistance is felt.

Pedal freeplay: 5 — 15 mm (0.20 — 0.59 in.)

4. IF NECESSARY, ADJUST PEDAL FREEPLAY

(a) Loosen the lock nut and turn the push rod until the freeplay is correct.

(b) Tighten the lock nut.

(c) After adjusting the pedal freeplay, check the pedal height.

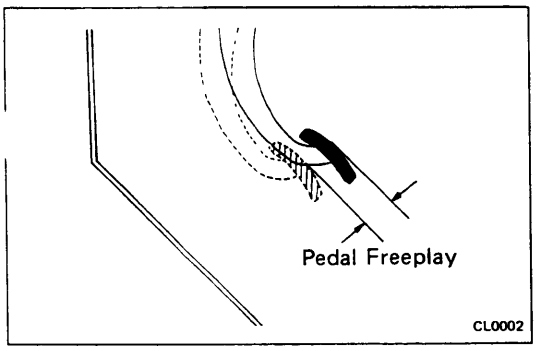

A01172

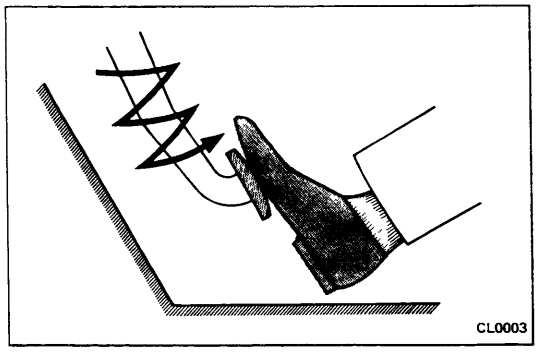

BLEEDING OF CLUTCH SYSTEM

NOTE: If any work is done on the clutch system or if air is suspected in the clutch lines, bleed the system of air.

CAUTION: DO NOT let brake fluid remain on a painted surface. Wash it off immediately.

1. FILL CLUTCH RESERVOIR WITH BRAKE FLUID

Check the reservoir frequently. Add fluid if necessary.

2. CONNECT VINYL TUBE TO BLEEDER PLUG

Insert the other end of the tube in a half-full container of brake fluid.

3. BLEED CLUTCH LINE

(a) Slowly pump the clutch pedal several times.

(b) While pressing on the pedal, loosen the bleeder plug until the fluid starts to run out. Then close the bleeder plug.

(c) Repeat this procedure until there are no more air bubbles in the fluid.

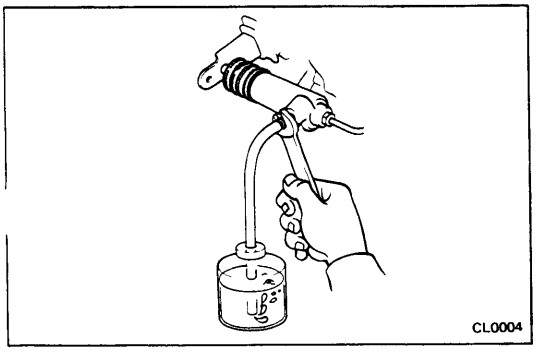

CLUTCH MASTER CYLINDER

COMPONENTS

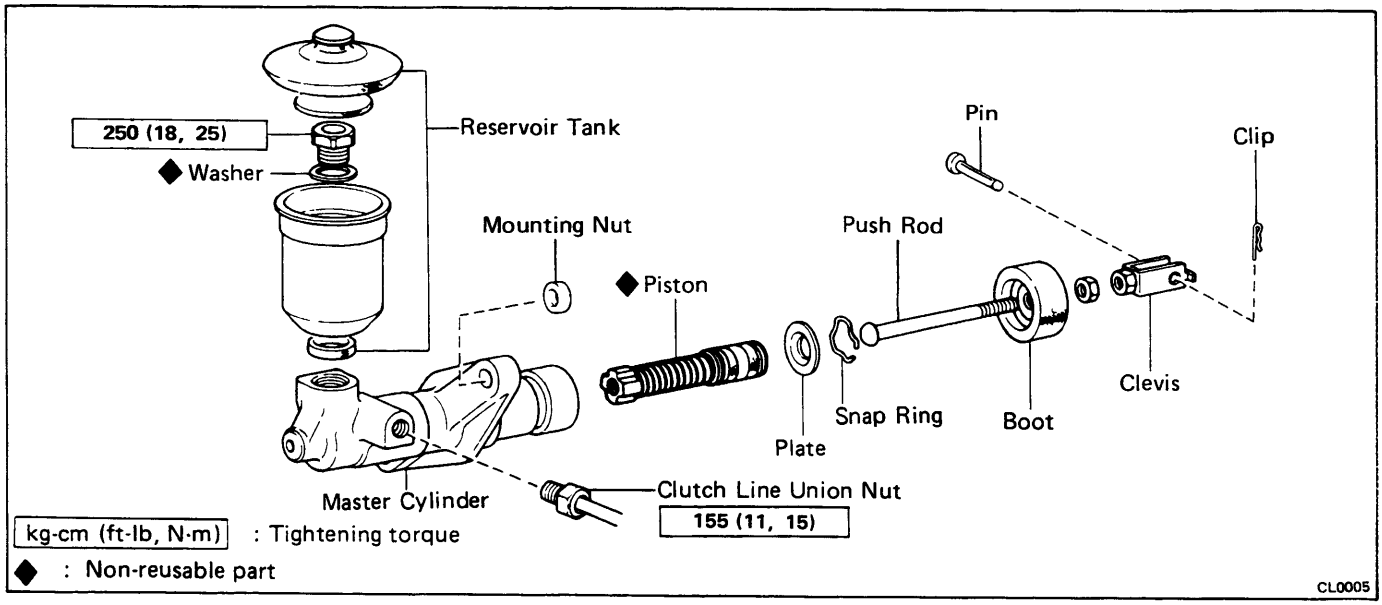

REMOVAL OF MASTER CYLINDER

1. **REMOVE PUSH ROD PIN**

2. **DISCONNECT CLUTCH LINE UNION**

   Using SST, disconnect the union nut.

   SST 09751-36011

3. **REMOVE MASTER CYLINDER**

   (a) Remove the mounting nut and bolt.

   (b) Pull out the master cylinder.

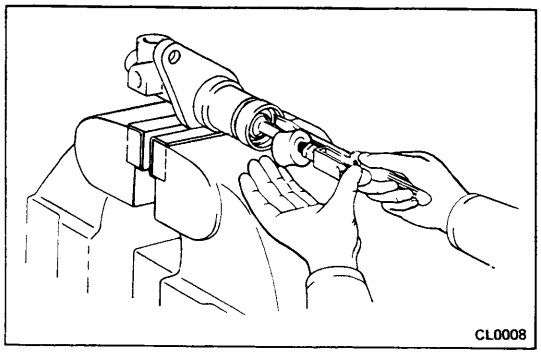

DISASSEMBLY OF MASTER CYLINDER

1. **REMOVE RESERVOIR TANK**

   Remove the hold-down bolt and pull off the reservoir tank.

2. **REMOVE PUSH ROD**

   (a) Pull back the boot and, using a screwdriver, remove the snap ring.

   (b) Pull out the push rod and washer.

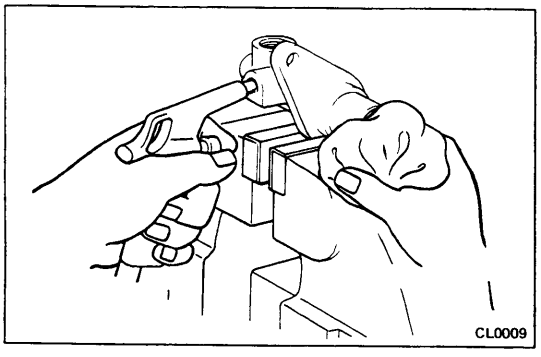

3. **REMOVE PISTON**

   Using compressed air, remove the piston from the cylinder.

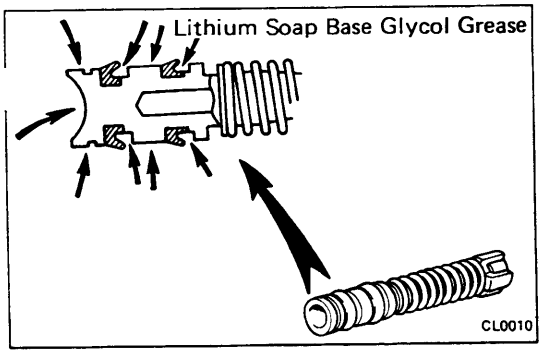

ASSEMBLY OF MASTER CYLINDER

1. **COAT PARTS WITH LITHIUM SOAP BASE GLYCOL GREASE, AS SHOWN**
2. **INSERT PISTON INTO CYLINDER**
3. **INSTALL PUSH ROD ASSEMBLY WITH SNAP RING**
4. **INSTALL RESERVOIR TANK**
   Torque: 250 kg-cm (18 ft-lb, 25 N·m)

INSTALLATION OF MASTER CYLINDER

(See page CL-4)

1. **INSTALL MASTER CYLINDER**
   Install the mounting nut and bolt, and torque them.
   Torque: 130 kg-cm (9 ft-lb, 13 N·m)
2. **CONNECT CLUTCH LINE UNION**
   Using SST, connect the union.
   SST 09751-36011
3. **CONNECT PUSH ROD AND INSTALL PIN**
   Install a new cotter pin in the push rod pin.
4. **BLEED SYSTEM AND ADJUST CLUTCH PEDAL**
   (See page CL-3)

CLUTCH RELEASE CYLINDER

COMPONENTS

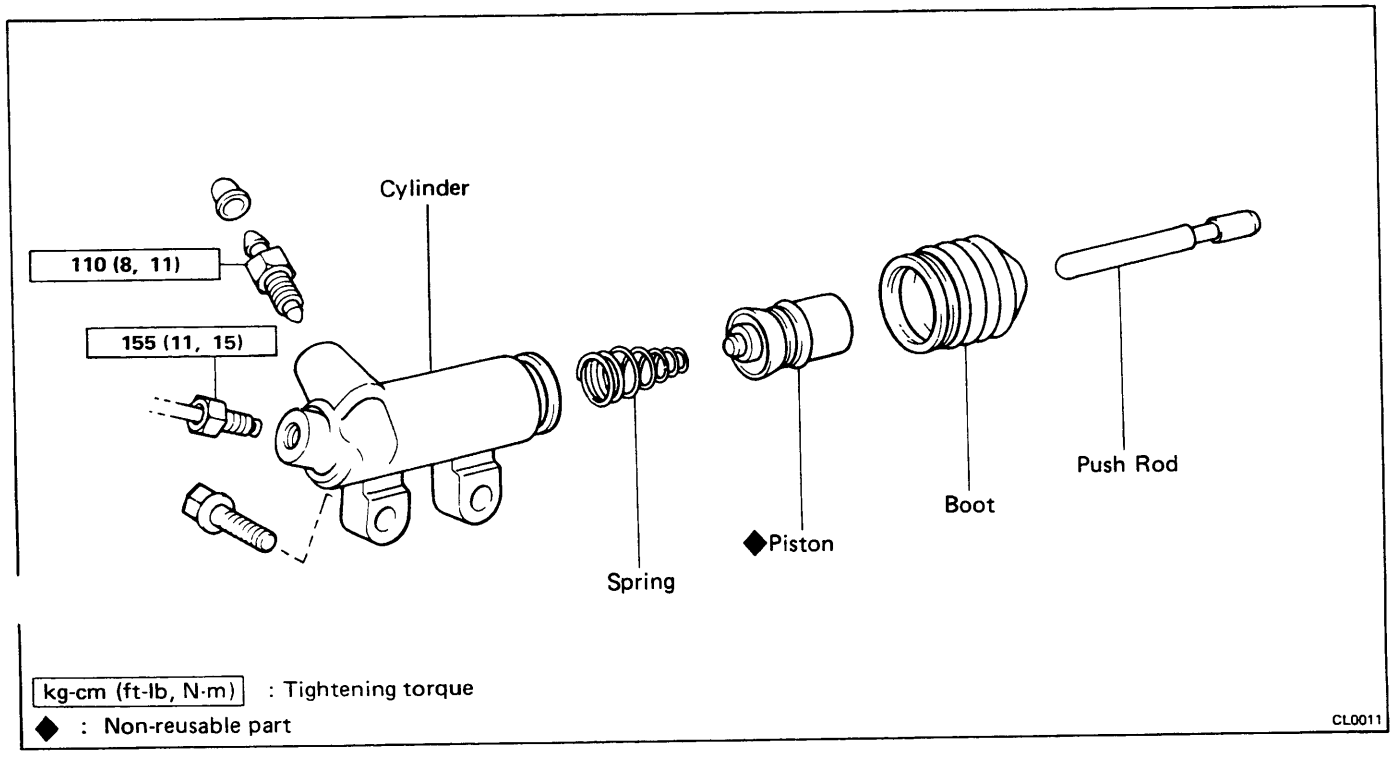

REMOVAL OF RELEASE CYLINDER

1. **DISCONNECT CLUTCH LINE UNION**
   Using SST, disconnect the union.
   SST 09751-36011
2. **REMOVE TWO BOLTS AND PULL OFF RELEASE CYLINDER**

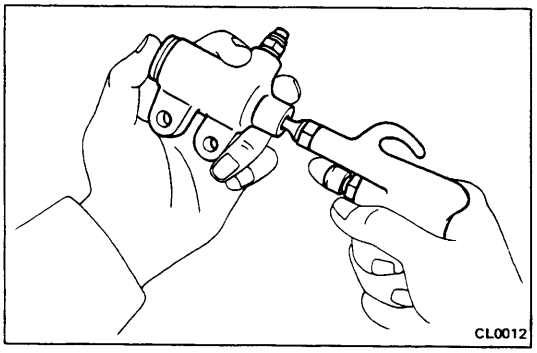

DISASSEMBLY OF RELEASE CYLINDER

1. **PULL OUT PUSH ROD**
2. **REMOVE BOOT**
3. **REMOVE PISTON**

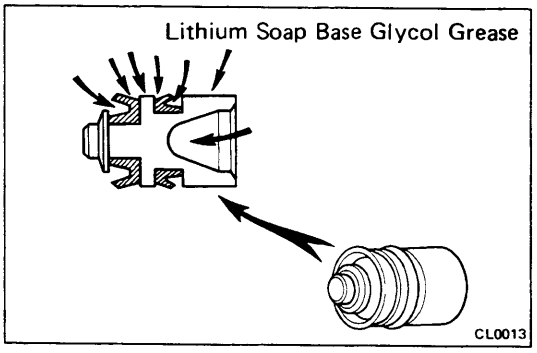

ASSEMBLY OF RELEASE CYLINDER

(See page CL-5)

1. **COAT PISTON WITH LITHIUM SOAP BASE GLYCOL GREASE, AS SHOWN**
2. **INSTALL PISTON**
3. **INSTALL BOOT AND INSERT PUSH ROD**

INSTALLATION OF RELEASE CYLINDER

(See page CL-5)

1. **INSTALL RELEASE CYLINDER WITH TWO BOLTS**
2. **CONNECT CLUTCH LINE UNION**
   Using SST, connect the union.
   SST 09751-36011
3. **BLEED CLUTCH SYSTEM**
   (See page CL-3)

CLUTCH UNIT

COMPONENTS

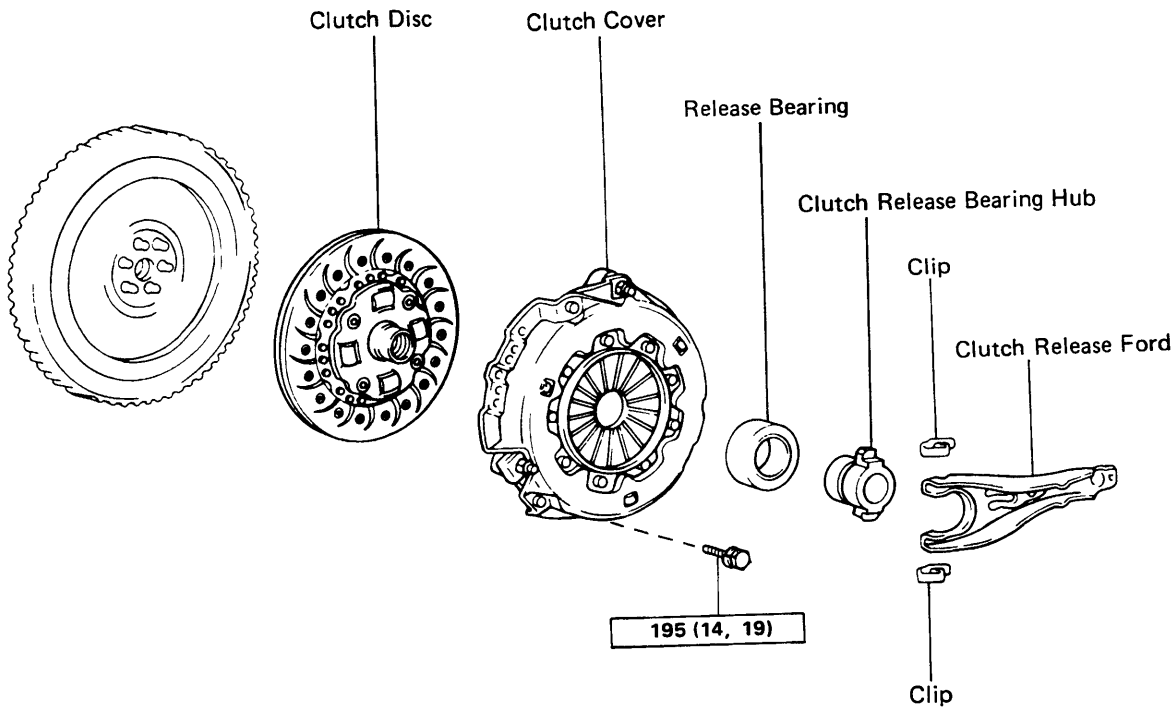

REMOVAL OF CLUTCH UNIT

1. **REMOVE TRANSMISSION (See pages MT-3, 4)**

   NOTE: Do not drain the transmission oil.

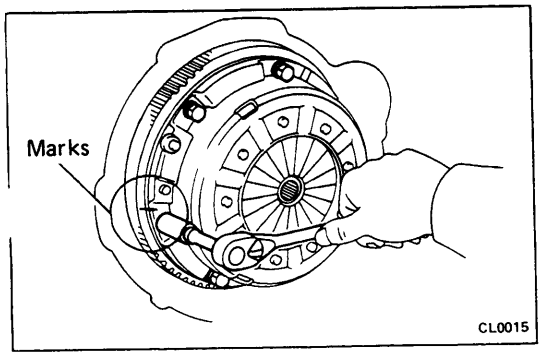

2. **REMOVE CLUTCH COVER AND DISC**

   (a) Put alignment marks on the clutch cover and flywheel.

   (b) Loosen the set bolts one turn at a time until spring tension is released.

   (c) Remove the set bolts and pull off the clutch cover and disc.

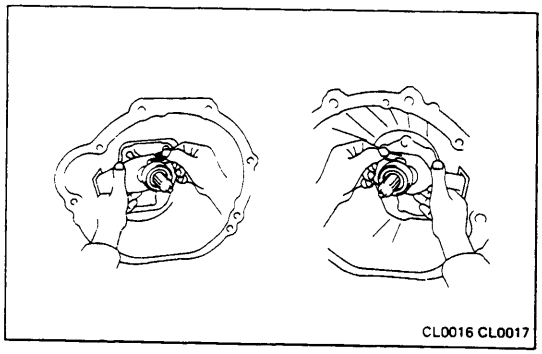

3. **REMOVE BEARING, HUB AND FORK FROM TRANSMISSION**

(a) Remove the retaining clip and pull off the bearing & hub.

(b) Remove the fork and boot.

INSPECTION OF CLUTCH PARTS

1. **INSPECT CLUTCH DISC FOR WEAR OR DAMAGE**

Using calipers, measure the rivet head depth.

Minimum rivet depth: 0.3 mm (0.012 in.)

If a problem is found, repair or replace the clutch disc.

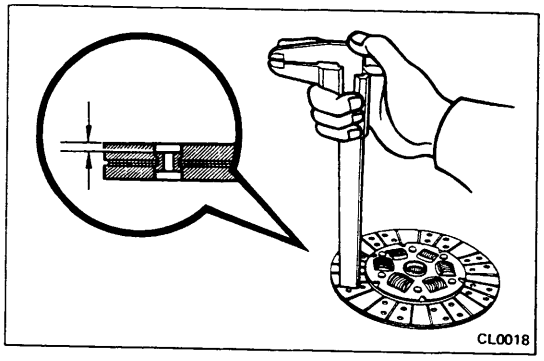

2. **INSPECT CLUTCH DISC RUNOUT**

Using a dial indicator, check the disc runout.

Maximum runout: 0.8 mm (0.031 in.)

If runout is excessive, replace the disc.

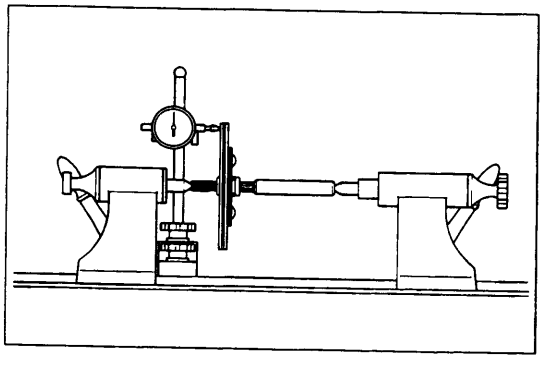

3. **INSPECT FLYWHEEL RUNOUT**

Using a dial indicator, check the flywheel runout.

Maximum runout: 0.2 mm (0.008 in.)

If runout is excessive, repair or replace the flywheel.

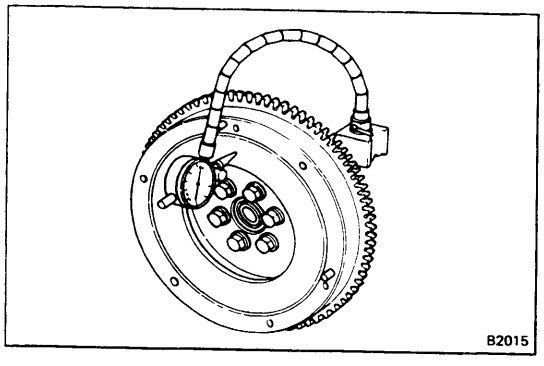

4. **INSPECT PILOT BEARING**

Turn the bearing by hand while applying force in the rotation direction.

If the bearing sticks or has much resistance, replace the pilot bearing.

NOTE: The bearing is permanently lubricated and requi no cleaning or lubrication.

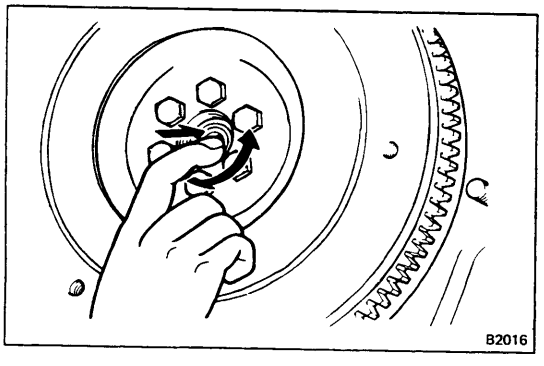

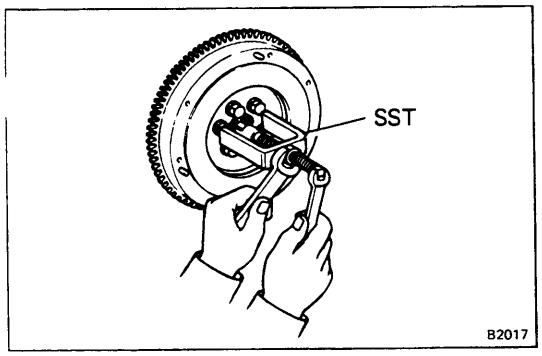

5. **IF NECESSARY, REPLACE PILOT BEARING**

(a) Using SST, remove the pilot bearing.

SST 09303-35011

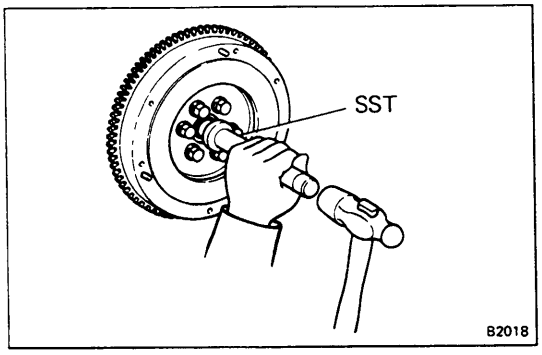

(b) Using SST, install the pilot bearing.

SST 09304-30012

NOTE: After assembling the pilot bearing to the hub, insure that it rotates smoothly.

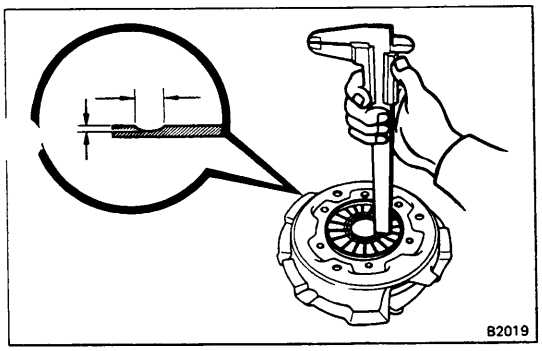

6. **INSPECT DIAPHRAGM SPRING FOR WEAR**

Using calipers, measure the diaphragm spring for depth and width of wear.

Maximum:	**Depth**	**0.6 mm (0.024 in.)**
	Width	**5.0 mm (0.197 in.)**

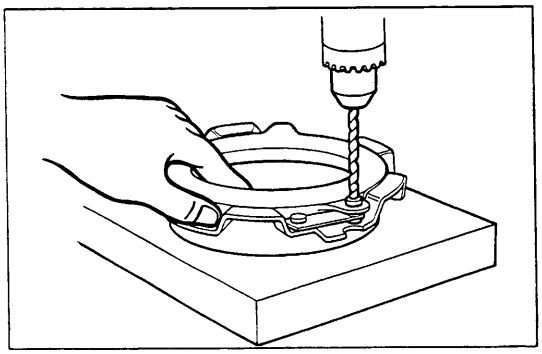

7. **IF NECESSARY, REPLACE PRESSURE PLATE**

(a) Remove the retracting spring.

(b) Drill out the rivet heads.

(c) Using a punch, drive out the rivets.

(d) Apply molybdenum disulphide lithium base grease (NLGI No.2) to the contact surface of the pressure plate and cover.

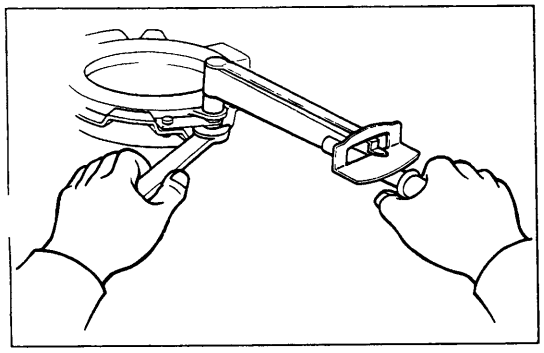

(e) Install a new pressure plate with the special pressure plate bolts and nuts. Torque the nuts.

Torque: 195 kg-cm (14 ft-lb, 19 N·m)

(f) Using a punch, stake the nuts.

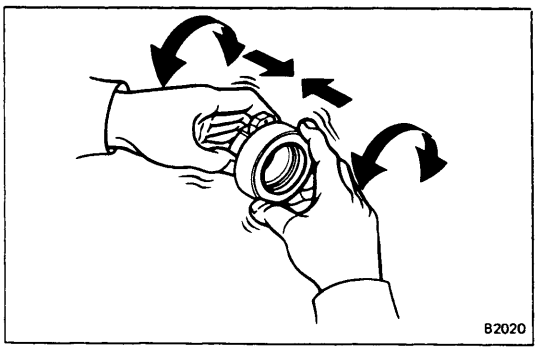

8. INSPECT RELEASE BEARING

Turn the bearing by hand while applying force in the rotation direction.

If bearing sticks or has much resistance, replace the release bearing.

NOTE: The bearing is permanently lubricated and requires no cleaning or lubrication.

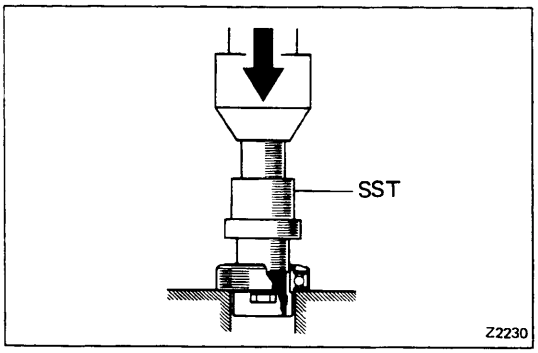

9. IF NECESSARY, REPLACE RELEASE BEARING

(a) Using a press and SST, press the release bearing from the hub.

SST 09315-00010

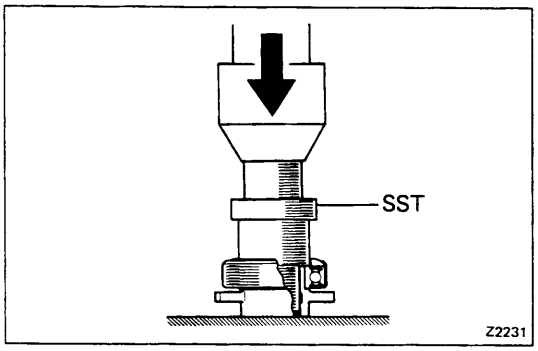

(b) Using a press and SST, press a new release bearing into the hub.

SST 09315-00021

(c) After installing the bearing, check that there is no d on the bearing when it is turned under pressure.

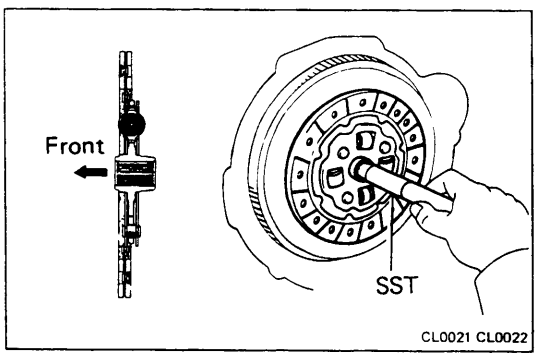

INSTALLATION OF CLUTCH UNIT

(See page CL-7)

1. INSTALL DISC ON FLYWHEEL

Using SST, install the disc on the flywheel.

SST 09301-20020

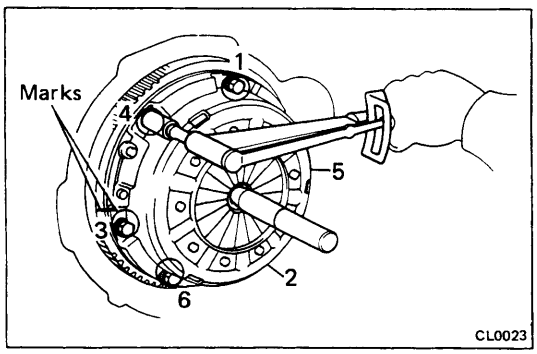

2. INSTALL CLUTCH COVER

(a) Align the marks on the clutch cover and flywheel.

(b) Tighten the bolts evenly. Make several passes around the cover until it is snug. Torque the bolts.

Torque: 195 kg-cm (14 ft-lb, 19 N·m)

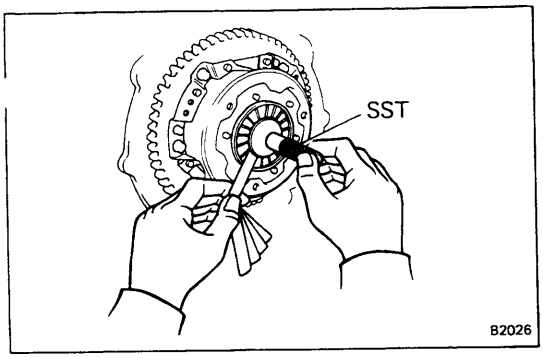

3. **CHECK DIAPHRAGM SPRING TIP ALIGNMENT**

Using a feeler gauge and SST, measure the gap between the spring tips and the tool.

SST 09302-30031

Maximum gap: 0.5 mm (0.020 in.)

If the gap is excessive, adjust as follows.

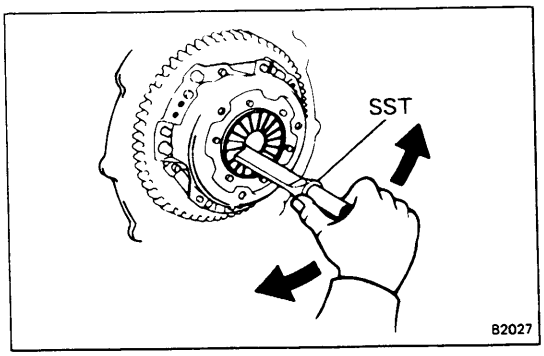

4. **IF NECESSARY, ADJUST SPRINGS**

Using SST, bend the springs to correct alignment.

SST 09333-00012

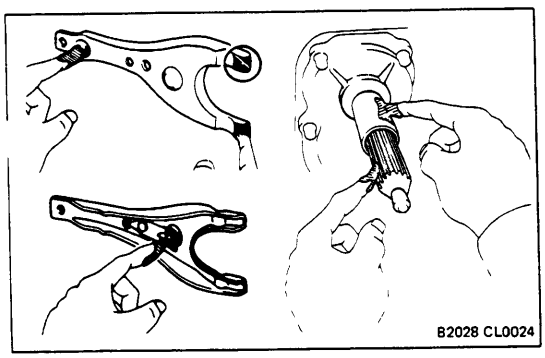

5. **APPLY MOLYBDENUM DISULPHIDE LITHIUM BASE GREASE (NLGI NO.2) OR MP GREASE**

(a) Apply molybdenum disulphide lithium base grease to the following parts:

- Release fork and hub contact point
- Release fork and push rod contact point
- Release fork pivot point
- Clutch disc spline
- Release bearing hub inside groove

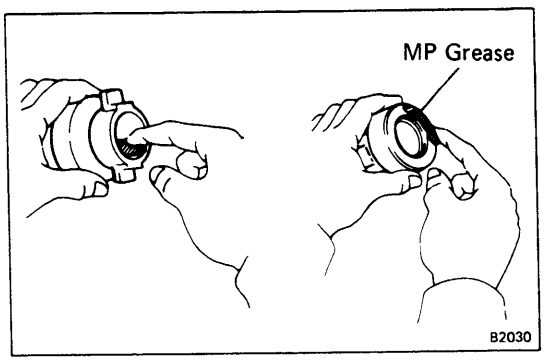

(b) Apply MP grease to release bearing.

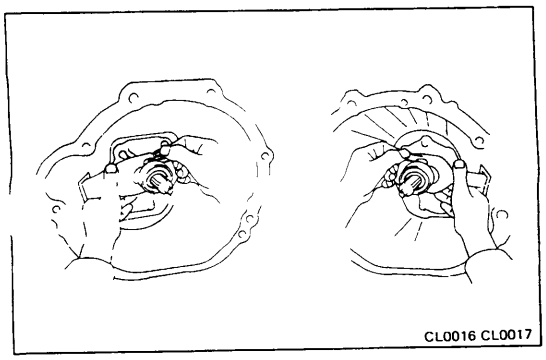

6. **INSTALL BOOT, FORK, HUB AND BEARING ON TRANSMISSION**

7. **INSTALL TRANSMISSION**

MANUAL TRANSMISSION

	Page
TROUBLESHOOTING	MT-2
REMOVAL OF TRANSMISSION	MT-3
W46,55,56 TRANSMISSION	MT-5
Components	MT-5
Disassembly of Transmission	MT-7
Inspection of Transmission Components	MT-16
Assembly of Transmission	MT-24
G52 TRANSMISSION	MT-39
Components	MT-39
Disassembly of Transmission	MT-41
Inspection of Transmission Components	MT-50
Assembly of Transmission	MT-55
INSTALLATION OF TRANSMISSION	MT-69

TROUBLESHOOTING

Problem	*Possible cause*	Remedy	Page
Hard to shift or will *not shift*	Splines on input shaft dirty or burred	Repair as necessary	MT-3
	Transmission faulty	Disassemble and inspect transmission	MT-3
Transmission jumps out of gear	Transmission faulty	Disassemble and inspect transmission	MT-3

A01158

REMOVAL OF TRANSMISSION

NOTE: For the transmission with a transfer (4WD) refer to REMOVAL OF TRANSFER on page TF-3.

1. **DISCONNECT BATTERY CABLE FROM NEGATIVE TERMINAL**

2. **REMOVE STARTER UPPER MOUNTING NUT**

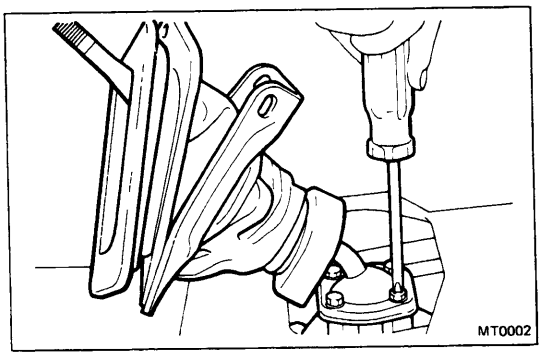

3. **REMOVE SHIFT LEVER FROM INSIDE OF VEHICLE**

4. **RAISE VEHICLE AND DRAIN TRANSMISSION**

   CAUTION: Be sure the vehicle is securely supported.

5. **DISCONNECT PROPELLER SHAFT**
   (See page PR-3)
   SST 09325-20010

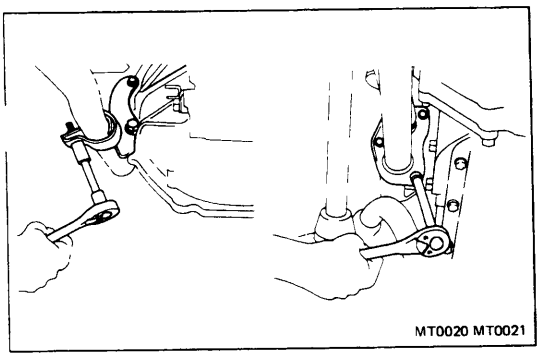

6. **DISCONNECT SPEEDOMETER CABLE AND BACK-UP LIGHT SWITCH CONNECTOR**

7. **REMOVE EXHAUST PIPE CLAMP AND EXHAUST PIPE**

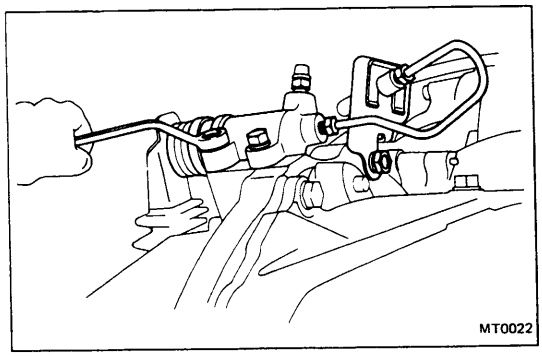

8. **REMOVE CLUTCH RELEASE CYLINDER, TUBE BRACKET AND STARTER LOWER MOUNTING BOLT**

   Remove the mounting bolts and lay the starter and release cylinder alongside the engine.

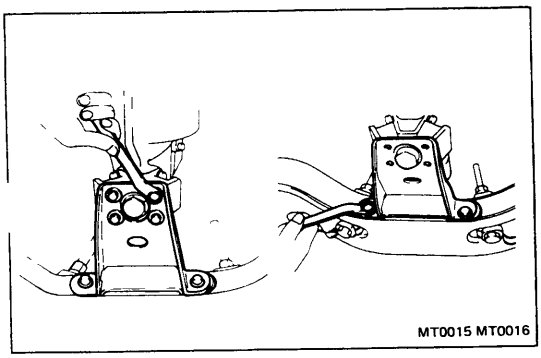

9. **REMOVE ENGINE REAR MOUNTING AND BRACKET**

   (a) Remove the four bolts from the engine rear mounting.

   (b) Raise the transmission slightly by raising the engine with a jack.

   (c) Remove the four bolts from the support member and remove the rear mounting bracket.

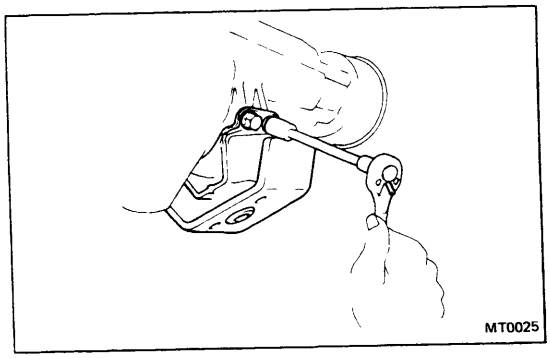

(d) Remove the engine rear mounting from the transmission.

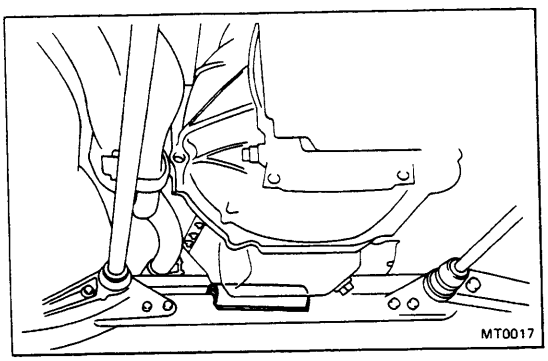

10. PLACE PIECE OF WOOD BETWEEN ENGINE OIL PAN AND FRONT CROSSMEMBER

NOTE: Tape a piece of wood or such about 20 mm (0.79 in.) thick on the front crossmember.

11. LOWER TRANSMISSION

12. REMOVE EXHAUST PIPE BRACKET AND STIFFENER PLATE BOLTS

13. REMOVE REMAINING TRANSMISSION BOLTS

14. REMOVE TRANSMISSION

(a) Draw out the transmission toward the rear.

(b) Lower the transmission front and remove the transmission from the vehicle.

NOTE: Be careful not to damage the extension housing dust deflector.

W46, 55 AND 56 TRANSMISSION

COMPONENTS

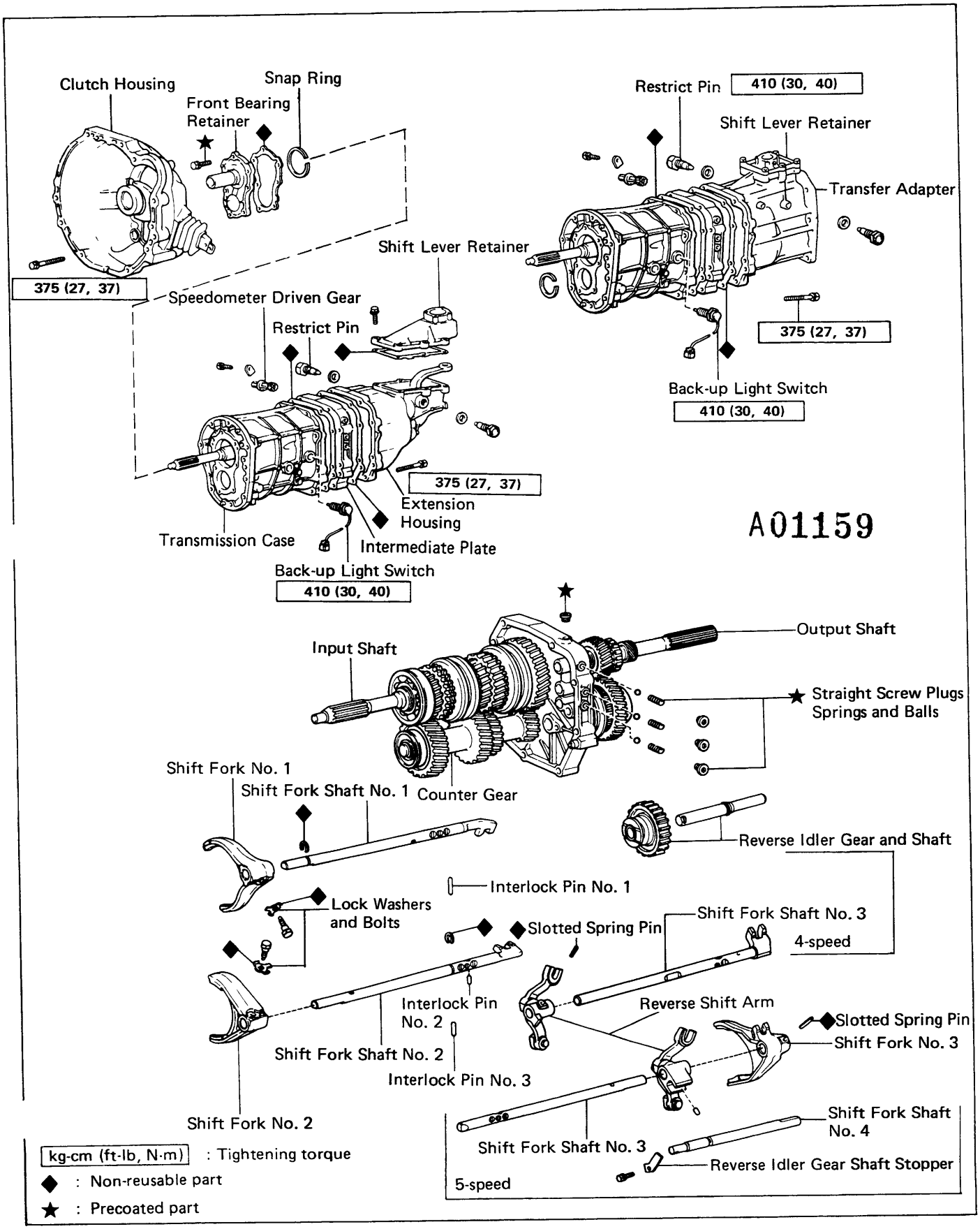

COMPONENTS (Cont'd)

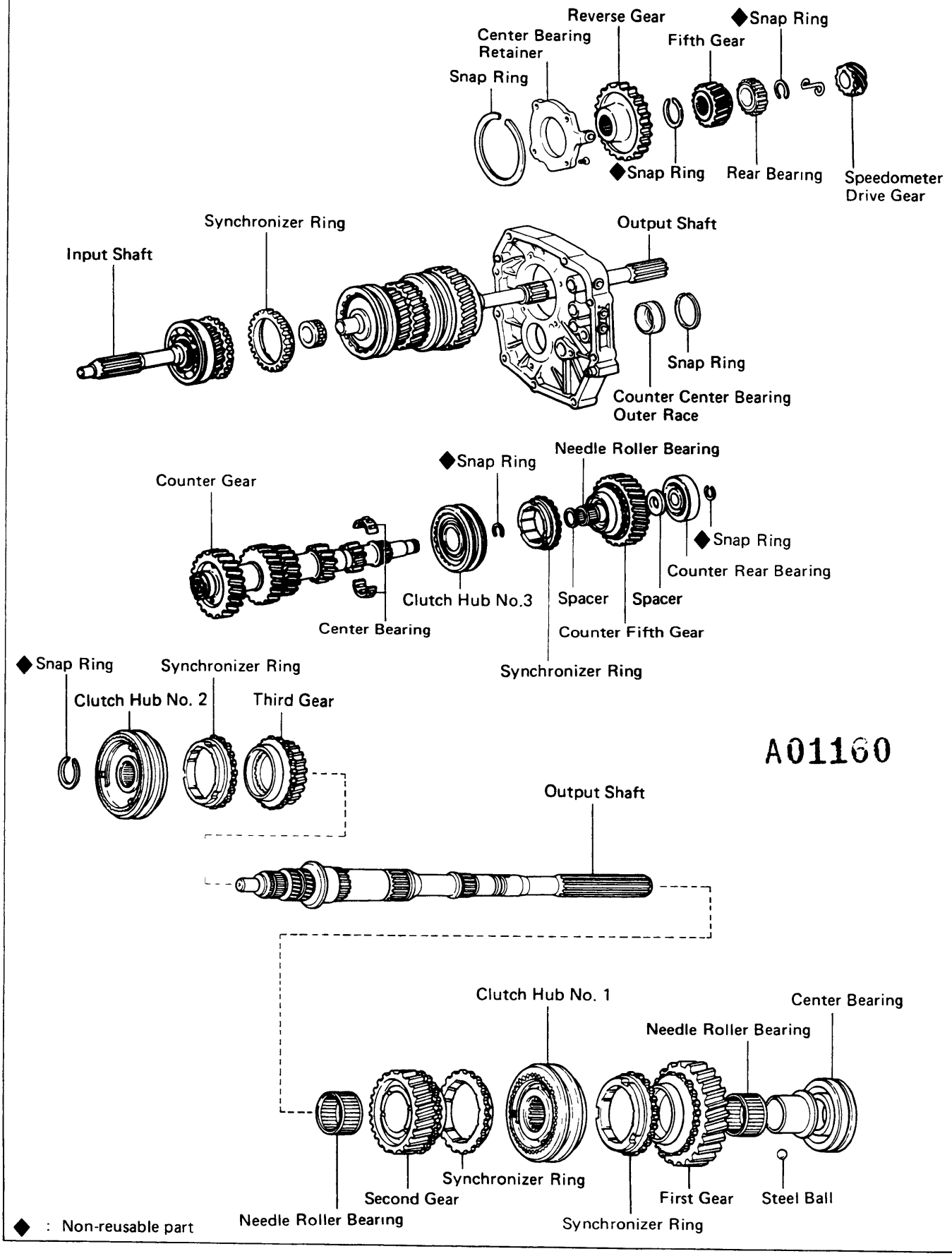

◆ : Non-reusable part

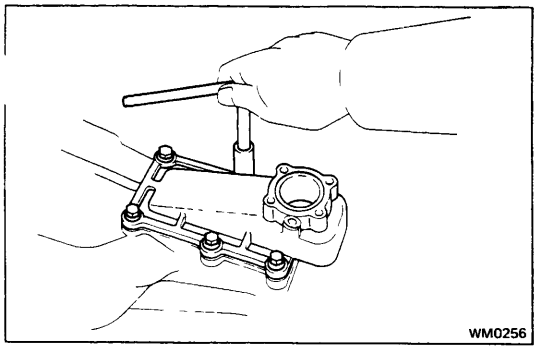

DISASSEMBLY OF TRANSMISSION

(See pages MT-5, 6)

1. **REMOVE BACK-UP LIGHT SWITCH, SPEEDOMETER DRIVEN GEAR, SHIFT LEVER RETAINER AND RESTRICT PINS**

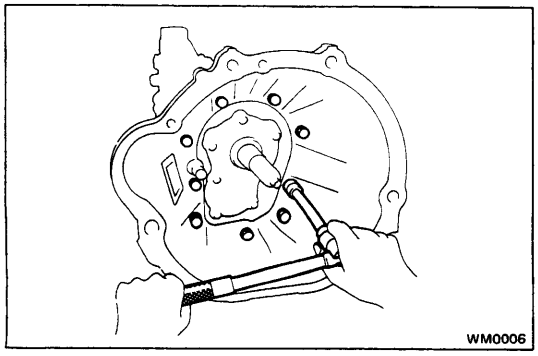

2. **REMOVE CLUTCH HOUSING FROM TRANSMISSION CASE**

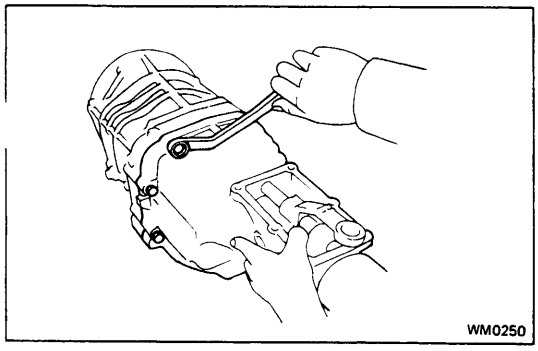

3. **REMOVE EXTENSION HOUSING (2WD) OR TRANSFER ADAPTER (4WD)**
   (a) Remove the shift lever housing set bolt.
   (b) Remove the nine bolts.
   (c) Using a plastic hammer, tap the extension housing (2WD) or the transfer adapter (4WD).
   (d) Disengage the shift and select lever from the shift head.
   (e) Pull out the extension housing (2WD) or the transfer adapter (4WD).

   NOTE: Leave the gasket attached to the intermediate plate.

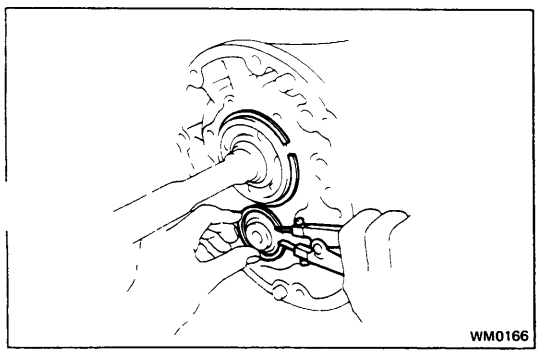

4. **REMOVE FRONT BEARING RETAINER AND TWO BEARING SNAP RINGS**

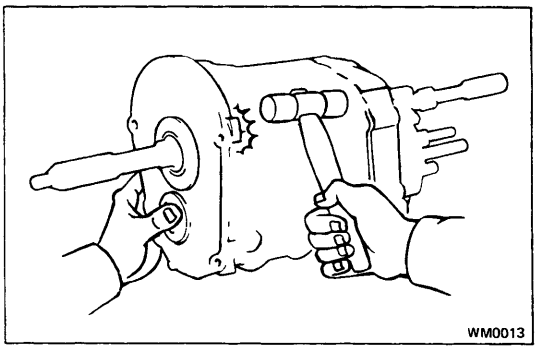
WM0013

5. SEPARATE INTERMEDIATE PLATE FROM TRANSMISSION CASE

(a) Using a plastic hammer, carefully tap the transm. sion case.

(b) Pull the transmission case from the intermediate plate.

NOTE: Leave the gasket attached to the intermediate plate.

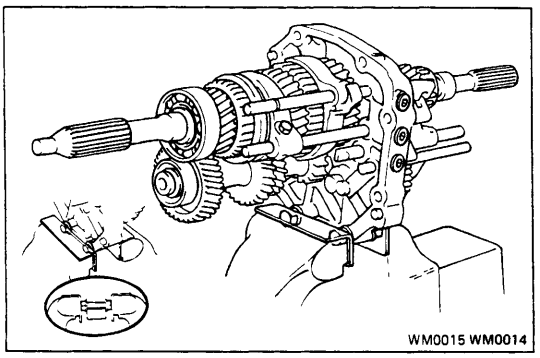
WM0015 WM0014

6. MOUNT INTERMEDIATE PLATE IN VISE

(a) Use two long clutch housing bolts, plate washers and suitable nuts as shown.

CAUTION: Install the plate washers in reverse of normal. Increase or decrease plate washers so that the bolt tip and the front tip surface of the nut are aligned.

(b) Mount the intermediate plate in a vise.

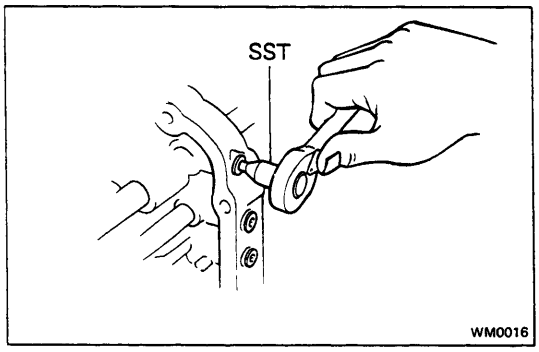

WM0016

7. REMOVE LOCKING BALL AND SPRING

(a) Using SST, remove the four plugs.

SST 09313-30021

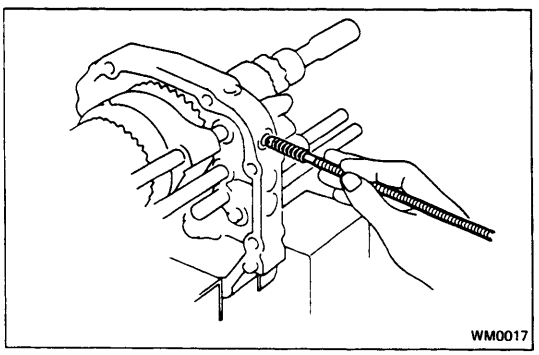
WM0017

(b) Using a magnetic finger, remove the three springs and balls.

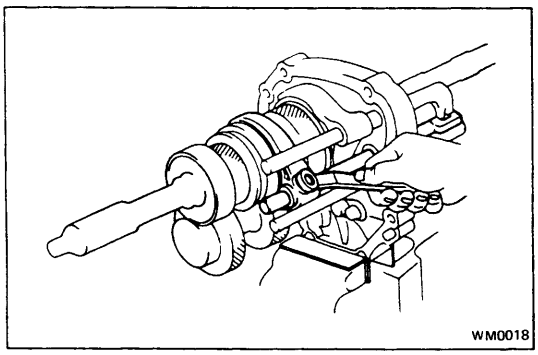
WM0018

8.-1 (4-Speed)
REMOVE SHIFT FORKS, SHIFT FORK SHAFTS AND REVERSE IDLER GEAR

(a) Pry out the lock washers of shift fork No. 1 and No. 2, and remove the two set bolts.

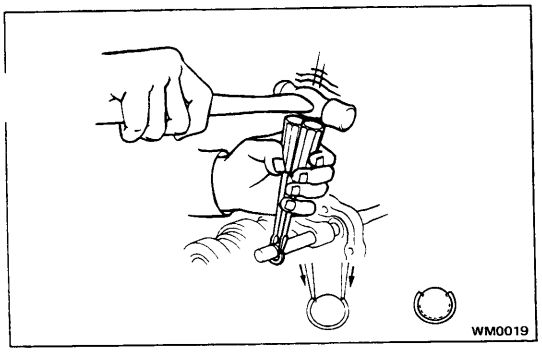

(b) Using two screwdrivers and a hammer, tap out the two snap rings of the No. 1 and No. 2 fork shafts.

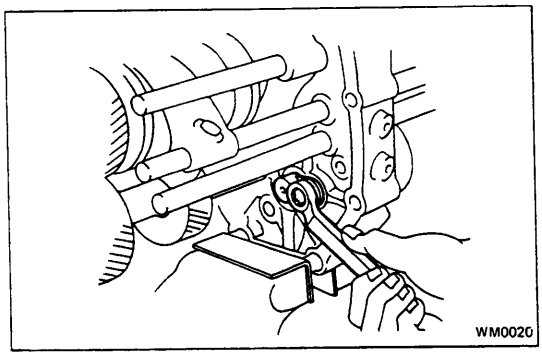

(c) Remove the reverse idler gear stopper.

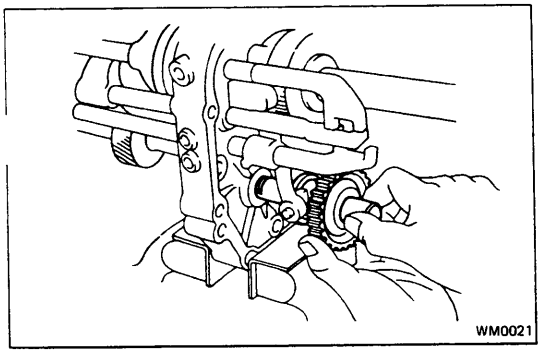

(d) Remove the reverse idler gear and shaft.

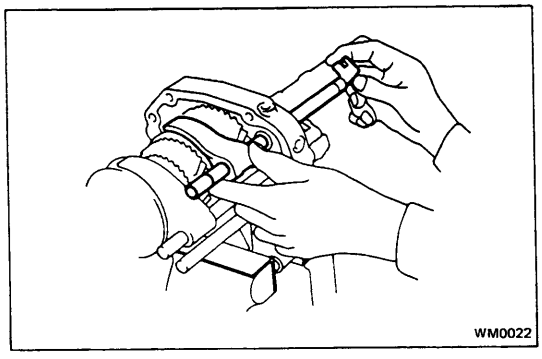

(e) Remove the shift fork and shaft No. 1.

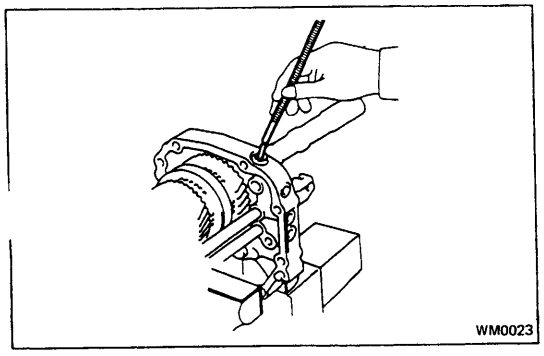

(f) Using a magnetic finger, remove interlock pin No. 1 and No. 2.

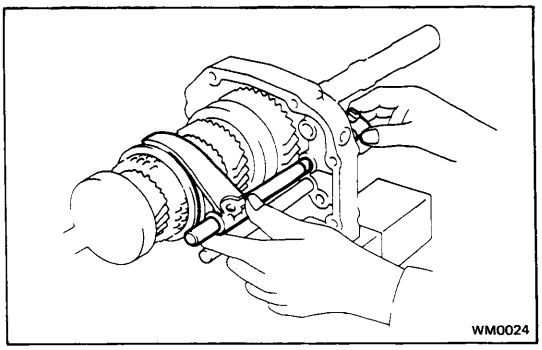

(g) Remove the shift fork and shaft No. 2.

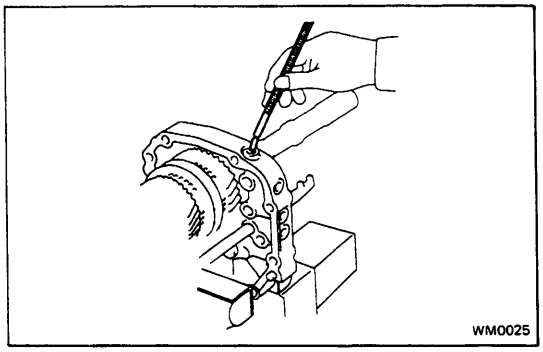

(h) Using a magnetic finger, remove interlock pin No. 3.

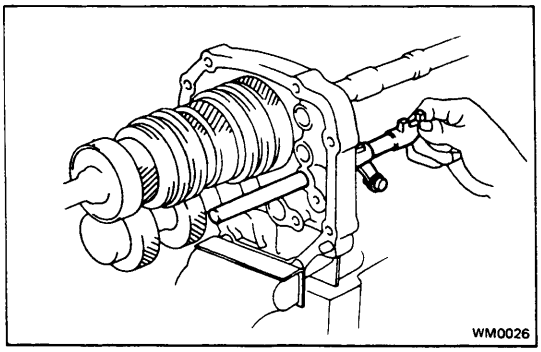

(i) Remove fork shaft No. 3 with reverse shift arm.

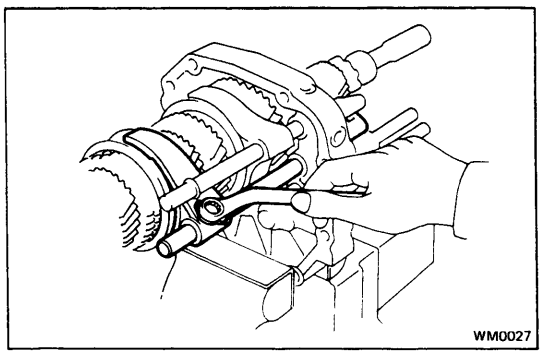

8.-2 (5-Speed)
REMOVE SHIFT FORKS SHIFT FORK SHAFTS AND REVERSE IDLER GEAR

(a) Pry out the lock washers of shift fork No. 1 and No. 2, and remove two set bolts.

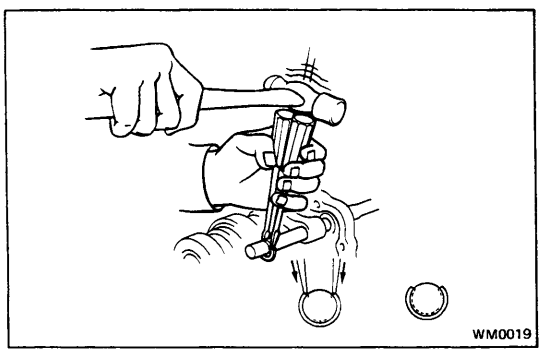

(b) Using two screwdrivers and a hammer, tap out the two snap rings of the No. 1 and No. 2 fork shafts.

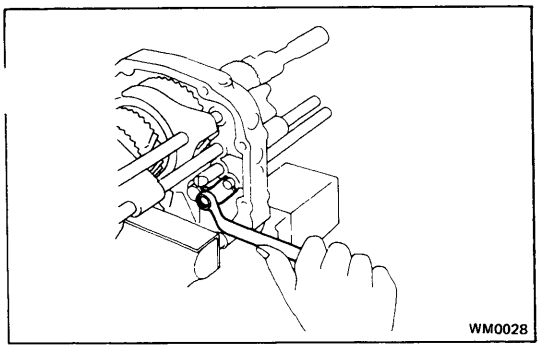

(c) Remove the reverse idler gear shaft stopper.

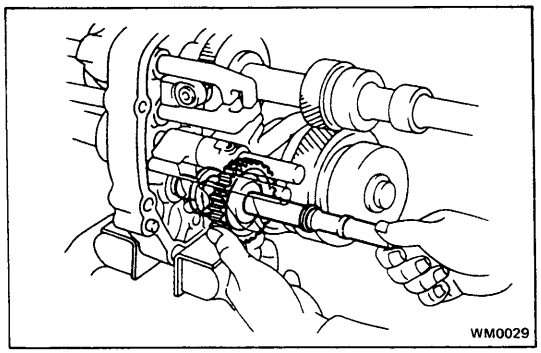

(d) Remove the reverse idler gear and shaft.

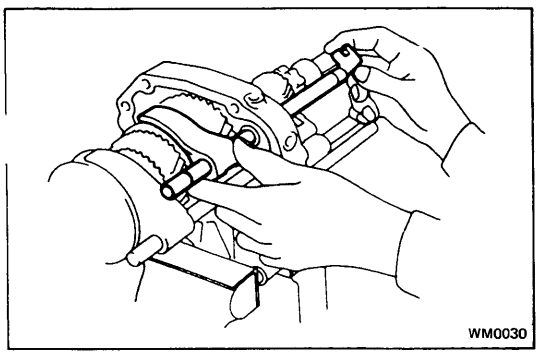

(e) Remove the shift fork and shaft No. 1.

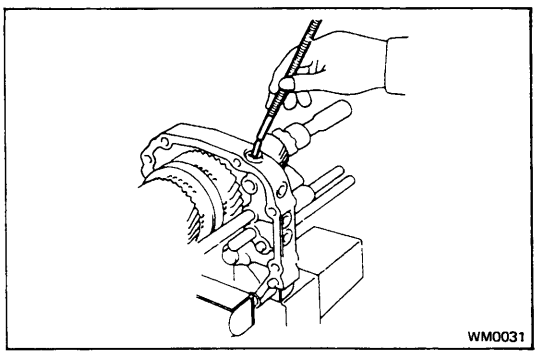

(f) Using a magnetic finger, remove interlock pins No. 1 and No. 2.

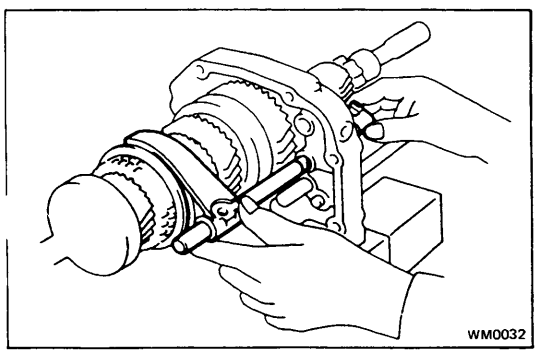

(g) Remove the shift fork and shaft No. 2.

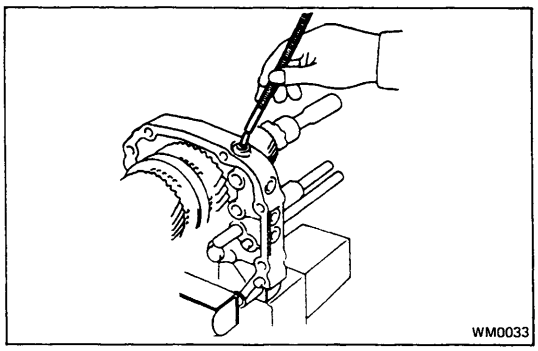

(h) Using a magnetic finger, remove interlock pin No. 3.

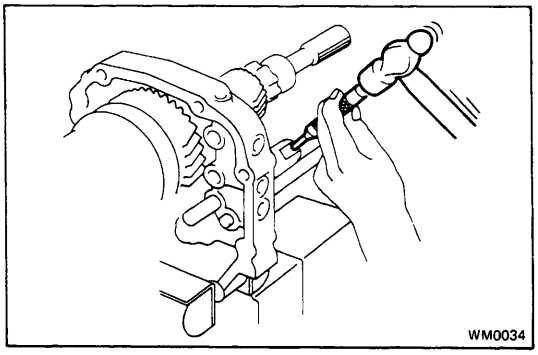

(i) Using a pin punch and hammer, drive out the fork shaft pin No. 3.

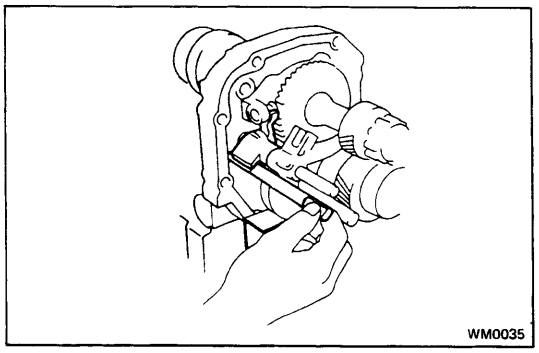

(j) Pull out the shift fork shaft No. 4.

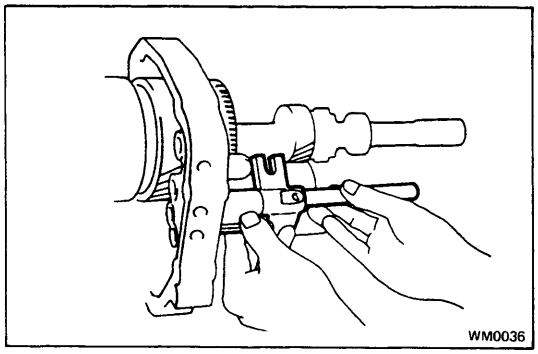

(k) Remove shift fork No. 3, fork shaft No. 3 and reverse shift arm with pin.

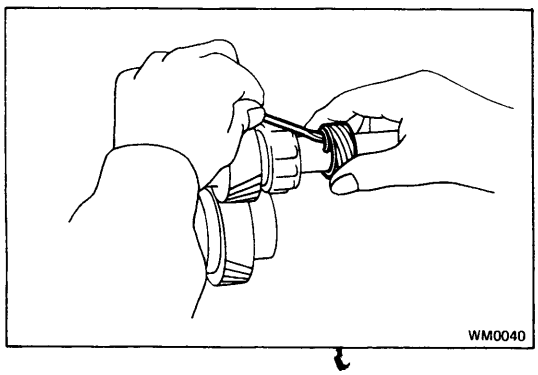

9. (2WD)
REMOVE SPEEDOMETER DRIVE GEAR

Pry out both ends of the clip and remove the drive gear.

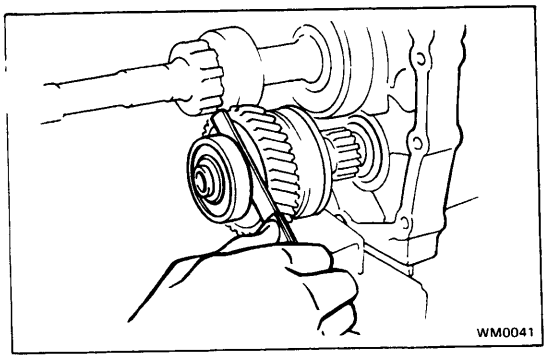

10. (5-Speed)
MEASURE COUNTER FIFTH GEAR THRUST CLEARANCE

Using a feeler gauge, measure the counter 5th gear thrust clearance.

Standard clearance: 0.10 – 0.41 mm (0.0039 – 0.0161 in.)
Maximum clearance: 0.46 mm (0.0181 in.)

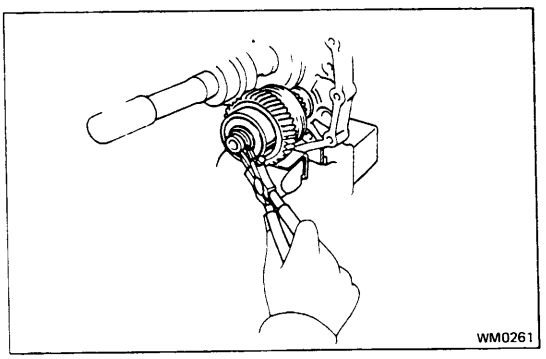

11. (5-Speed)
REMOVE COUNTER REAR BEARING, SPACER, COUNTER FIFTH GEAR AND NEEDLE ROLLER BEARING

(a) Using snap ring pliers, remove the snap ring.

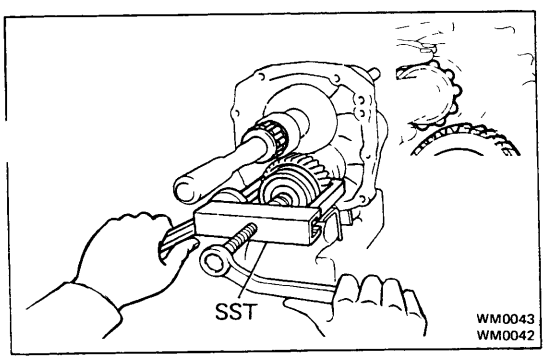

(b) Using SST, remove the rear bearing, spacer, 5th gear and bearing.

SST 09213-36020

CAUTION: Be careful not to catch the output shaft rear bearing roller on the counter 5th gear.

(c) Remove the spacer.

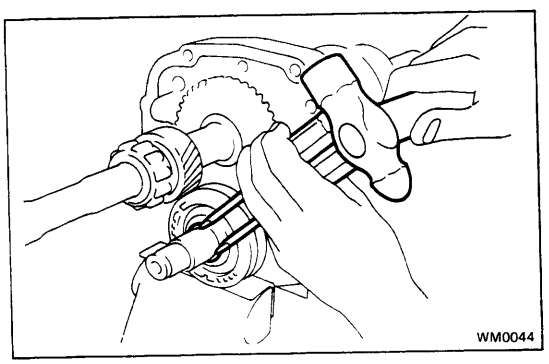

12. (5-Speed)
REMOVE HUB SLEEVE NO. 3 ASSEMBLY

(a) Using two screwdrivers and a hammer, tap out the snap ring.

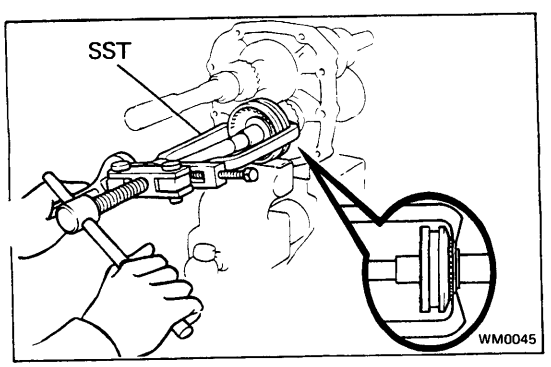

(b) Using SST, remove clutch hub No. 3.

SST 09950-20015

CAUTION: Latch the claw of the SST onto the clutch hub, not the shifting key retainer.

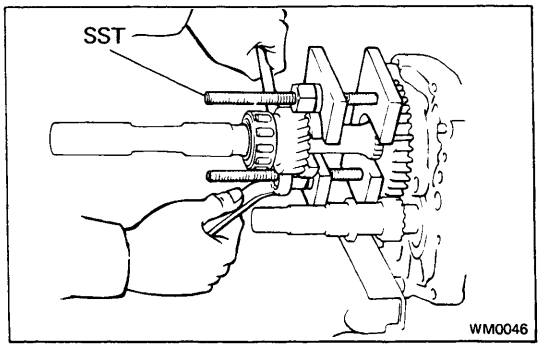

13. (5-Speed)
REMOVE OUTPUT SHAFT REAR BEARING AND FIFTH GEAR

(a) Using two screwdrivers and a hammer, tap out the snap ring.

(b) Using SST, remove the rear bearing and 5th gear.

SST 09312-20011

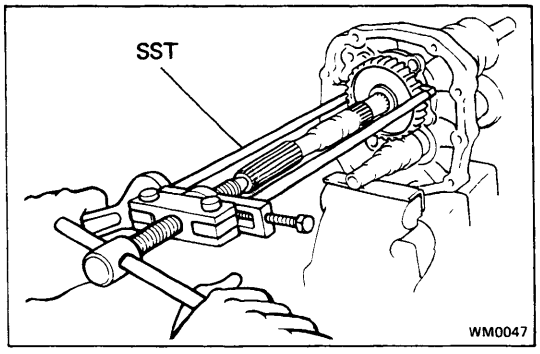

14. **REMOVE REVERSE GEAR**

(a) Using snap ring pliers, remove the snap ring.

(b) Using SST, remove the reverse gear.

SST 09950-20015

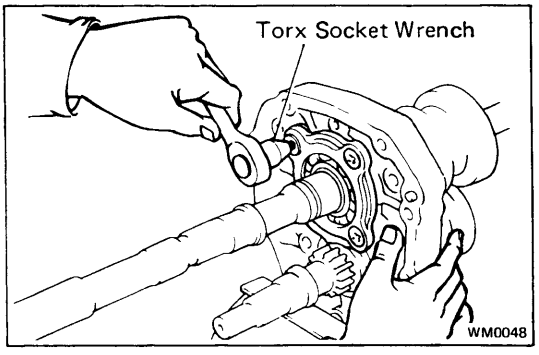

15. **REMOVE CENTER BEARING RETAINER**

(a) Using a torx socket wrench, unscrew the torx screws and remove the retainer.

(b) Using snap pliers, remove the snap ring.

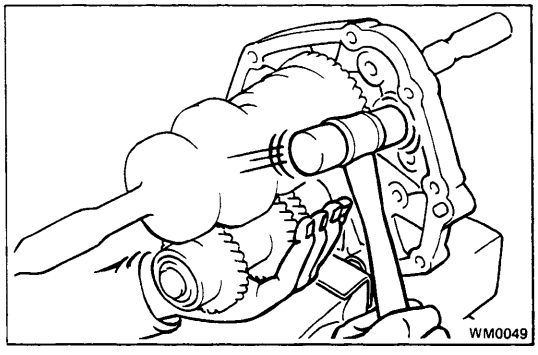

16. **REMOVE OUTPUT SHAFT AND COUNTER GEAR AS A UNIT FROM INTERMEDIATE PLATE**

(a) Remove the output shaft, input shaft and counter gear as a unit from the intermediate plate by pulling on the counter gear and tapping on the intermediate plate with a plastic hammer.

(b) Remove the input shaft from output shaft.

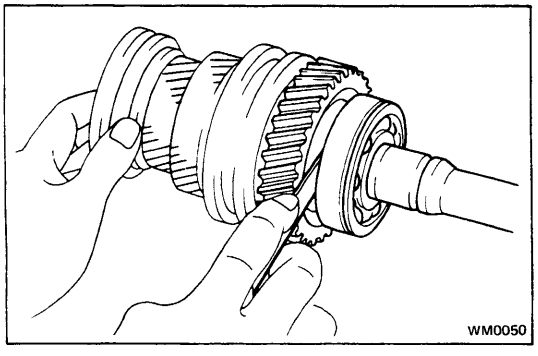

17. **MEASURE EACH GEAR THRUST CLEARANCE**

Using a feeler gauge, measure the thrust clearance of each gear.

Standard clearance: **0.10 — 0.25 mm (0.0039 — 0.0098 in.)**
Maximum clearance: **0.30 mm (0.0118 in.)**

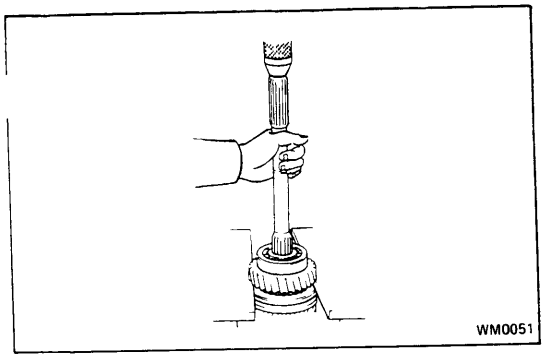

18. **REMOVE OUTPUT SHAFT CENTER BEARING AND FIRST GEAR ASSEMBLY**
    (a) Shift hub sleeve No. 1 onto the 2nd gear.
    (b) Using a press, remove the center bearing, 1st gear, needle roller bearing, inner race and synchronizer ring.

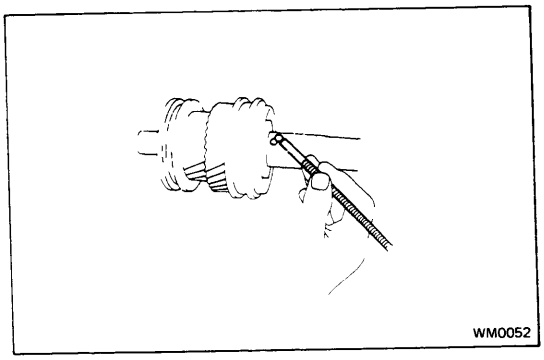

19. **REMOVE LOCKING BALL**

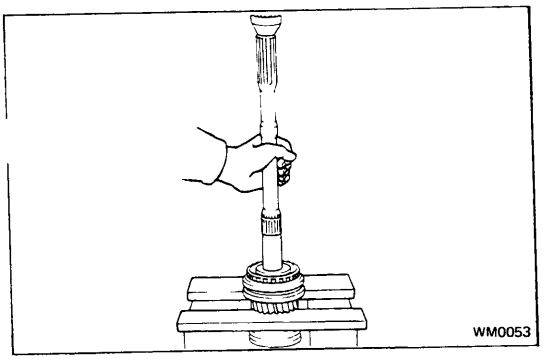

20. **REMOVE HUB SLEEVE NO. 1 ASSEMBLY, SECOND GEAR AND NEEDLE ROLLER BEARING**
    Using a press, remove the parts from the shaft as an assembly.

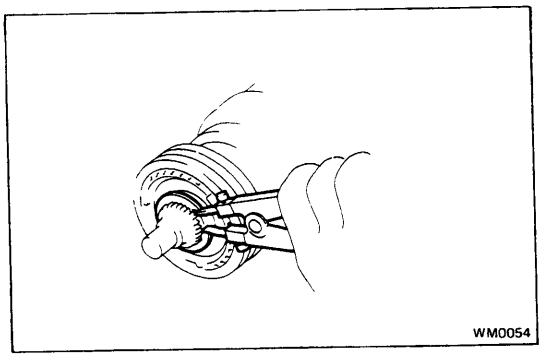

21. **REMOVE HUB SLEEVE NO. 2 ASSEMBLY AND THIRD GEAR**
    (a) Using snap ring pliers, remove the snap ring.

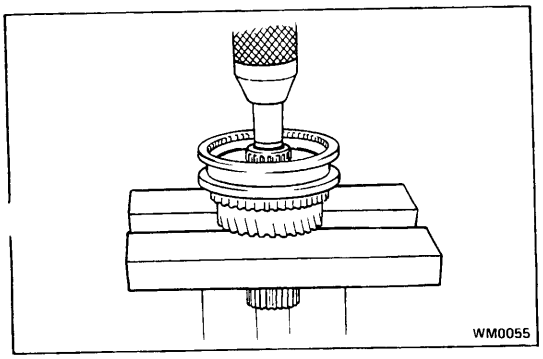

    (b) Using a press, remove hub sleeve No. 2, the synchronizer ring and 3rd gear.

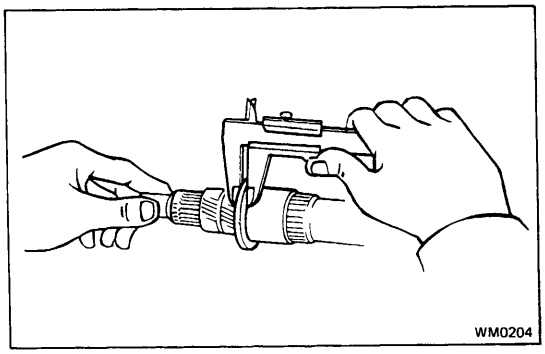
WM0204

INSPECTION OF TRANSMISSION COMPONENTS

1. INSPECT OUTPUT SHAFT AND INNER RACE

(a) Using calipers, measure the output shaft flange thickness.

Minimum thickness: 5.60 mm (0.2205 in.)

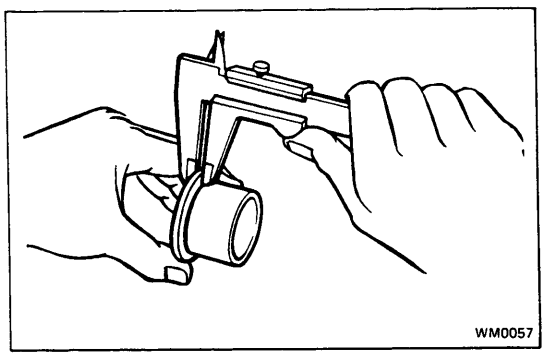
WM0057

(b) Using calipers, measure the inner race flange thickness.

Minimum thickness: 4.70 mm (0.1850 in.)

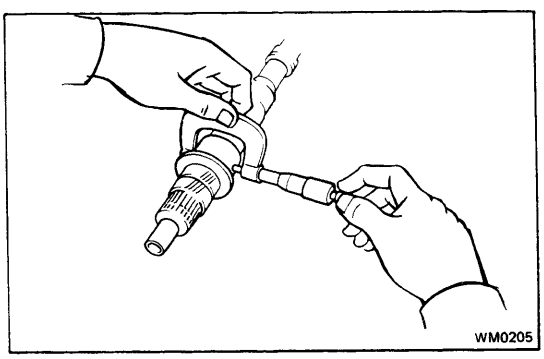
WM0205

(c) Using a micrometer, measure the outer diameter of the output shaft journal.

Minimum diameter:

2nd gear 42.85 mm (1.6870 in.)

3rd gear 37.80 mm (1.4882 in.)

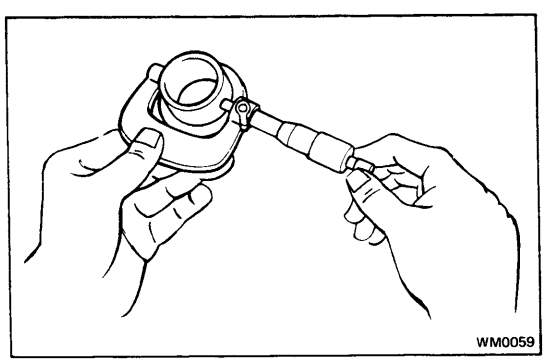
WM0059

(d) Using a micrometer, measure the outer diameter of the inner race.

Minimum diameter: 42.85 mm (1.6870 in.)

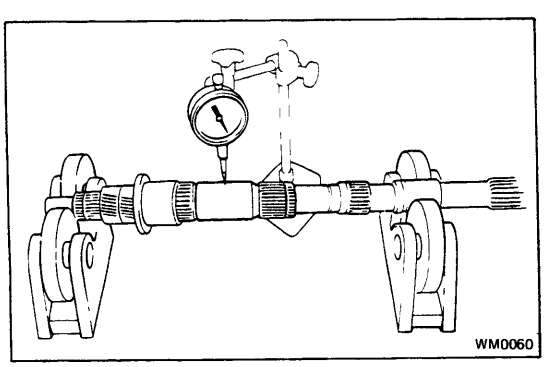
WM0060

(e) Using a dial indicator, check the shaft runout.

Maximum runout: 0.06 mm (0.0024 in.)

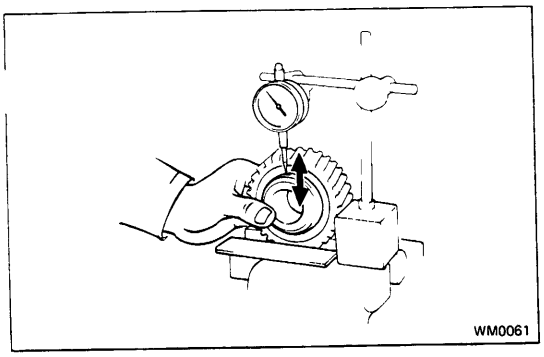
WM0061

2. CHECK OIL CLEARANCE OF FIRST GEAR

Using a dial indicator, measure the oil clearance between the gear and inner race with the needle roller bearing installed.

Standard clearance: 0.009 — 0.060 mm (0.0004 — 0.0024 in.)
Maximum clearance: 0.15 mm (0.0059 in.)

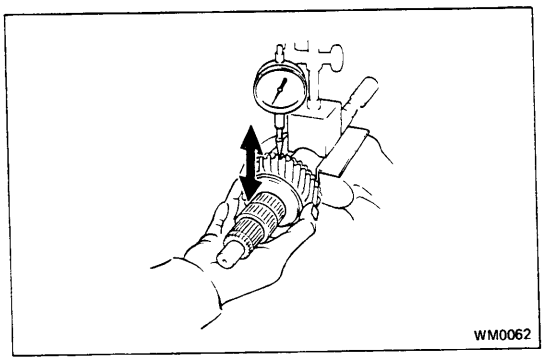
WM0062

3. CHECK OIL CLEARANCE OF SECOND AND COUNTER FIFTH GEAR

Using a dial indicator measure the oil clearance between the gear and output shaft with the needle roller bearing installed.

Standard clearance:
2nd gear 0.009 — 0.060 mm (0.0004 — 0.0024 in.)
5th gear 0.009 — 0.062 mm (0.0004 — 0.0024 in.)
Maximum clearance: 0.15 mm (0.0059 in.)

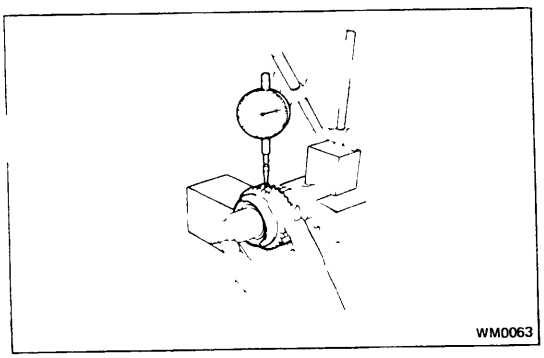
WM0063

4. CHECK OIL CLEARANCE OF THIRD GEAR

Using a dial indicator, measure the oil clearance between the gear and output shaft.

Standard clearance: 0.060 — 0.103 mm (0.0024 — 0.0041 in.)
Maximum clearance: 0.20 mm (0.0079 in.)

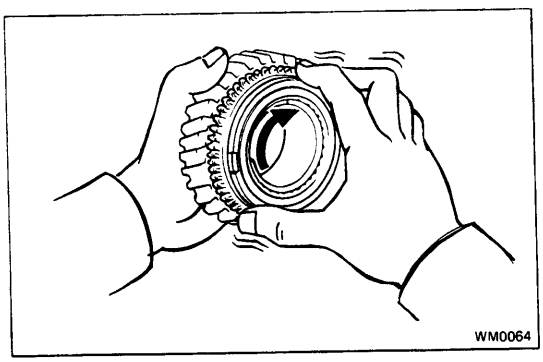
WM0064

5. INSPECT SYNCHRONIZER RINGS

(a) Turn the ring and push it in to check the braking action.

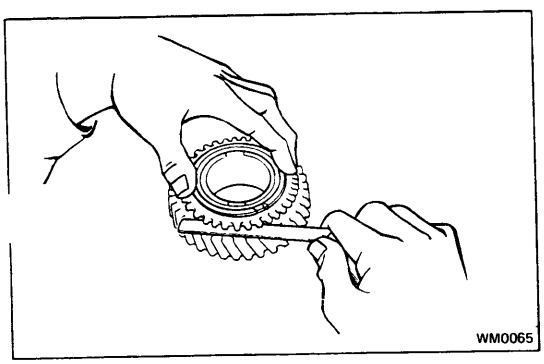
WM0065

(b) Measure the clearance between the synchronizer ring back and the gear spline end.

Standard clearance: 0.7 — 1.7 mm (0.028 — 0.067 in.)
Minimum clearance: 0.5 mm (0.020 in.)

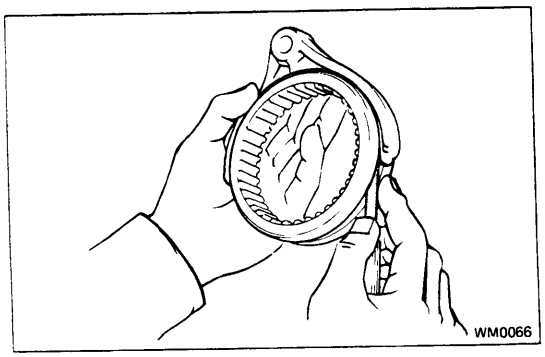
WM0066

6. MEASURE CLEARANCE OF SHIFT FORKS AND HUB SLEEVES

Using a feeler gauge, measure the clearance between the hub sleeve and shift fork.

Maximum clearance: 1.0 mm (0.039 in.)

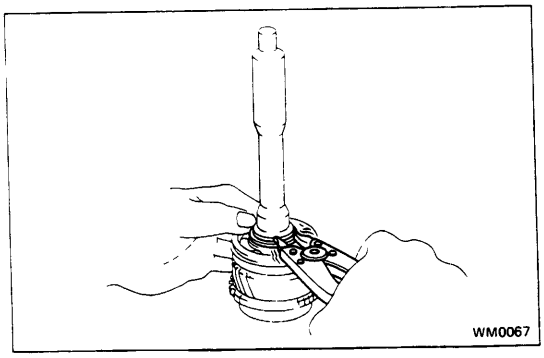
WM0067

7. IF NECESSARY, REPLACE INPUT SHAFT BEARING

(a) Using snap ring pliers, remove the snap ring.

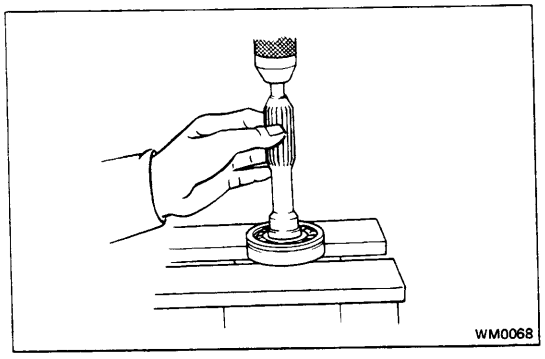
WM0068

(b) Using a press, remove the bearing.

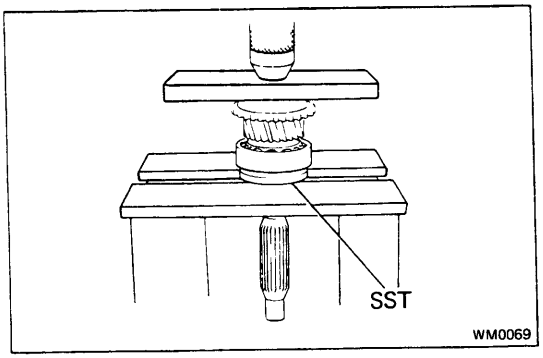

WM0069

(c) Using a press and SST, install a new bearing.

SST 09506-35010

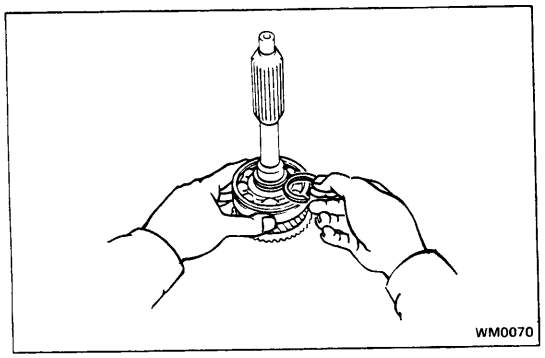
WM0070

(d) Select a snap ring that will allow minimum axial play and install it on the shaft.

Mark	Thickness	mm (in.)
1	2.05 — 2.10	(0.0807 — 0.0827)
2	2.10 — 2.15	(0.0827 — 0.0846)
3	2.15 — 2.20	(0.0846 — 0.0866)
4	2.20 — 2.25	(0.0866 — 0.0886)
5	2.25 — 2.30	(0.0886 — 0.0906)
11	2.30 — 2.35	(0.0906 — 0.0925)
12	2.35 — 2.40	(0.0925 — 0.0945)

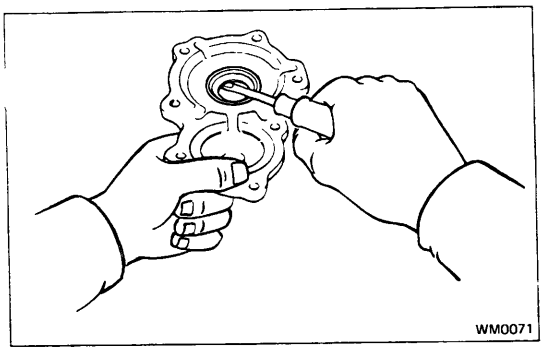

8. INSPECT FRONT BEARING RETAINER

Check the retainer and oil seal for wear or damage. If the oil seal is worn or damaged, replace it as follows.

(a) Using a screwdriver, pry out the oil seal.

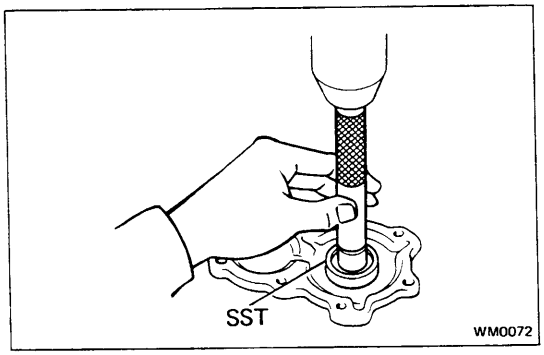

(b) Using SST, press in the oil seal.

SST 09608-20011

Oil seal depth: 11.4 — 12.0 mm from retainer end (0.449 — 0.472 in.)

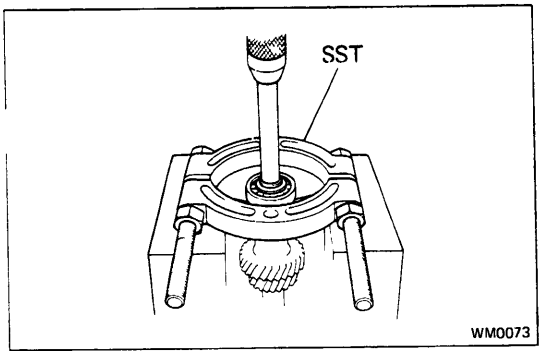

9. IF NECESSARY, REPLACE COUNTER GEAR FRONT BEARING AND SIDE RACE

(a) Using snap ring pliers, remove the snap ring.

(b) Using a press and SST, press out the bearing.

SST 09950-00020

(c) Check the side race for wear or damage.

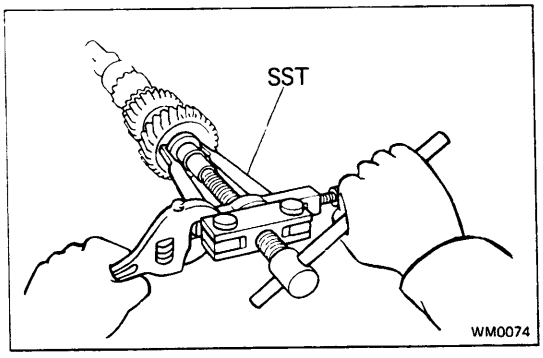

(d) If necessary, remove the side race.

(1) Using a SST and socket wrench, remove the side race.

SST 09950-20015

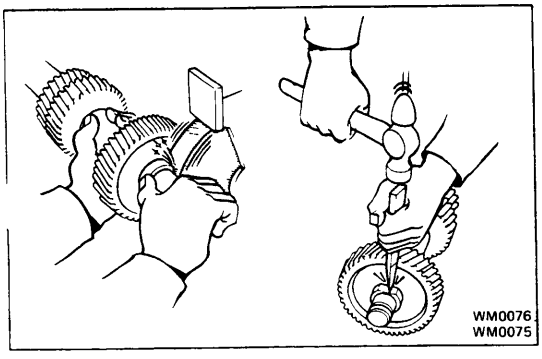

(2) If the side race cannot be removed with SST, grind part of the side race and cut it off with a chisel.

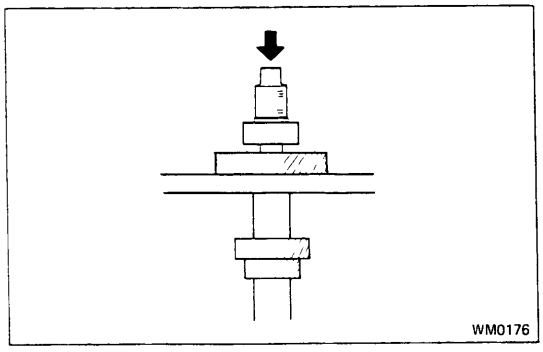

(e) Using a socket wrench, press in the bearing, side race and inner race.

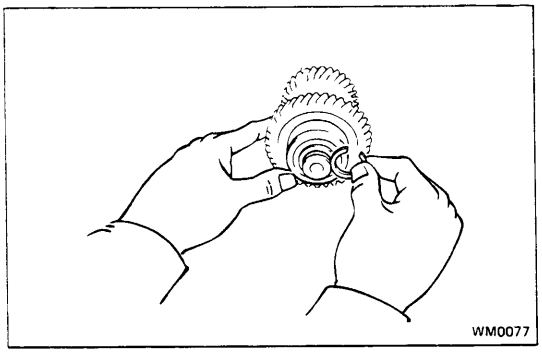

(f) Select a snap ring that will allow minimum axial play and install it on the shaft.

Mark	Thickness	mm (in.)
1	2.05 — 2.10	(0.0807 — 0.0827)
2	2.10 — 2.15	(0.0827 — 0.0846)
3	2.15 — 2.20	(0.0846 — 0.0866)
4	2.20 — 2.25	(0.0866 — 0.0886)
5	2.25 — 2.30	(0.0886 — 0.0906)
6	2.30 — 2.35	(0.0906 — 0.0925)
7	2.35 — 2.40	(0.0925 — 0.0945)

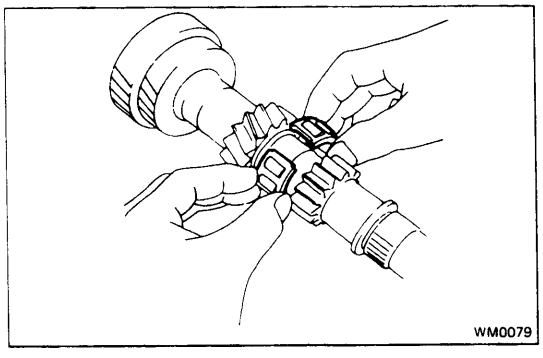

10. IF NECESSARY, REPLACE COUNTER GEAR CENTER BEARING

(a) Remove the bearing from the counter gear.

(b) Install the new bearing on the counter gear.

NOTE: Engage the roller cages.

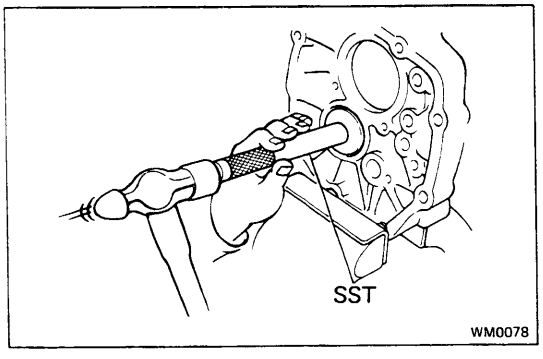

(c) Using SST, tap out the bearing outer race.

SST 09608-35013

NOTE: The outer race will be installed later, as the transmission is assembled.

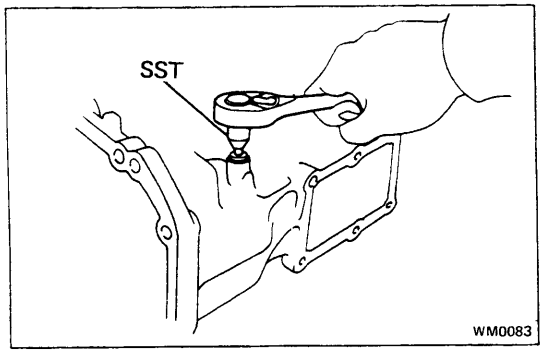

11. IF NECESSARY, REPLACE REVERSE RESTRICT PIN

(a) Using SST, remove the screw plug.

SST 09313-30021

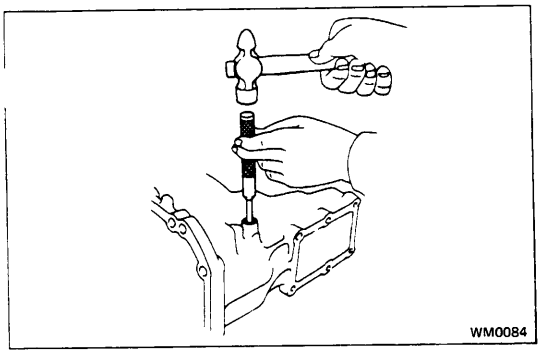

(b) Using a pin punch and hammer, drive out the slotted spring pin.

(c) Pull off the lever housing and slide out the shaft.

(d) Install the lever housing.

(e) Using a pin punch and hammer, drive in the slotted spring pin.

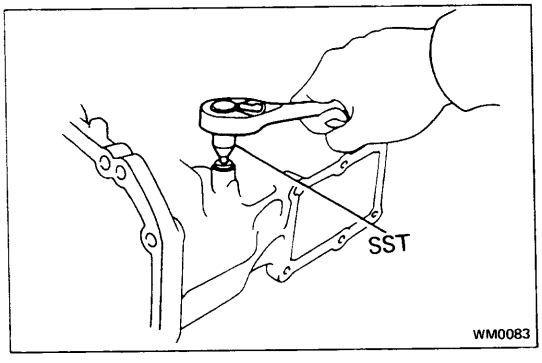

(f) Install and torque the screw plug.

Torque: 250 kg-cm (18 ft-lb, 25 N·m)

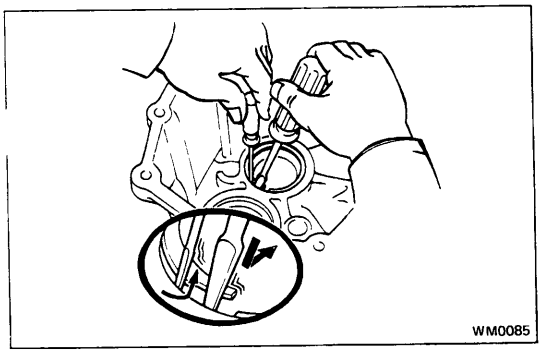

12. (5-Speed)
IF NECESSARY, REPLACE BEARING AND OUTER RACE

(a) Remove the outer race from the extension housing.

(1) Using two screwdrivers, remove the snap ring.

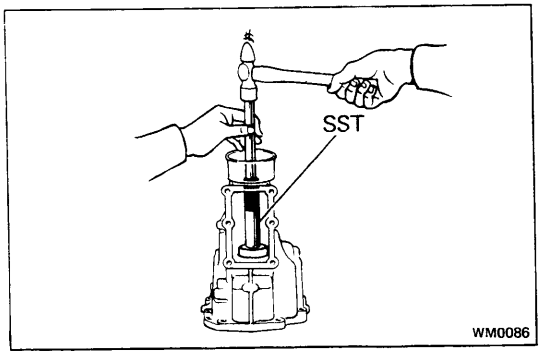

(2) Using SST, tap out the outer race.

SST 09608-35013

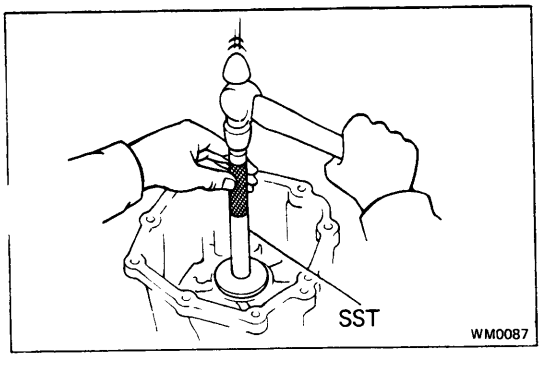

(b) Install the bearing outer race.

(1) Using SST, install a new outer race.

SST 09608-35013

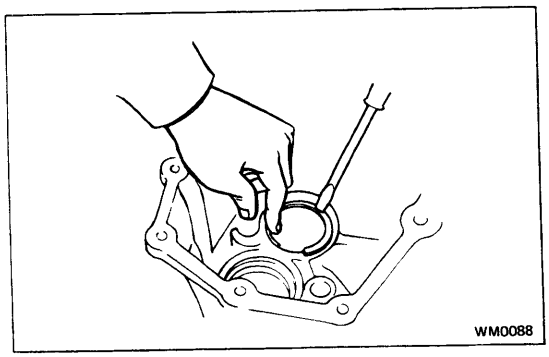

(2) Install the snap ring.

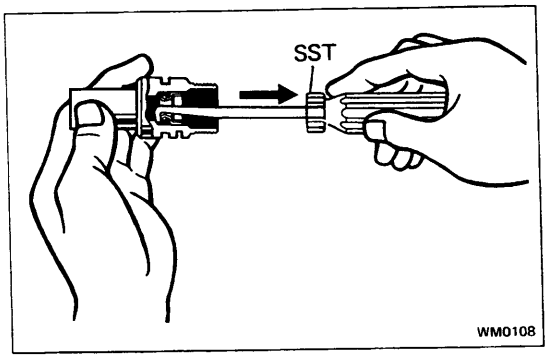

13. (2WD)
IF NECESSARY, REPLACE SPEEDOMETER DRIVEN GEAR OIL SEAL

(a) Using SST, remove the oil seal.

SST 09921-00010

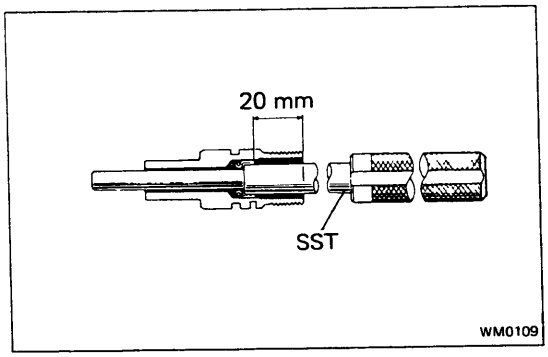

(b) Using SST, install a new oil seal.

SST 09201-60011

Oil seal depth: 20 mm (0.79 in.)

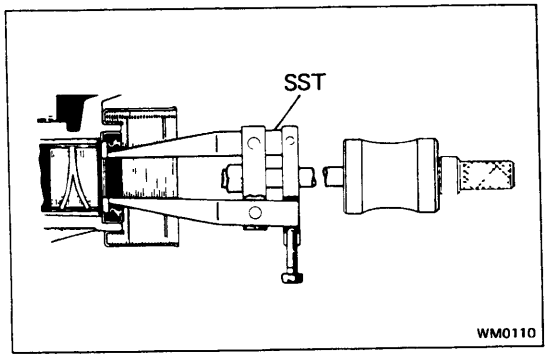

14.-1 (2WD)
IF NECESSARY, REPLACE OIL SEAL AND BUSHING

(a) Using SST, remove the oil seal.

SST 09308-00010 or
09308-10010 w/ output shaft installed

(b) Heat the extension housing end to 80 — 100°C (176 — 212°F) in an oil bath.

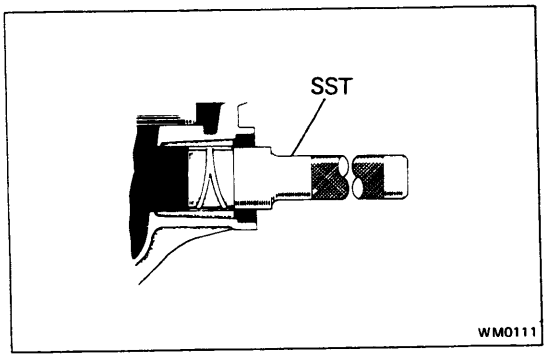

(c) Using SST, remove the bushing and install a new bushing.

SST 09307-30010

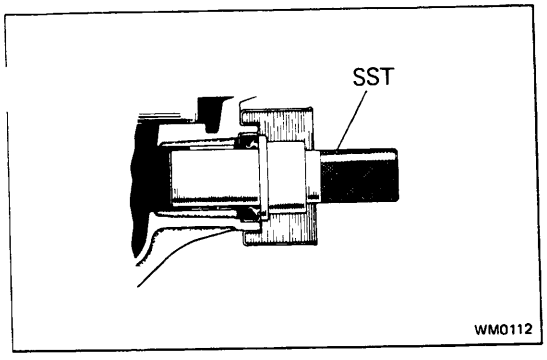

(d) Using SST, drive in a new oil seal.
SST 09325-20010

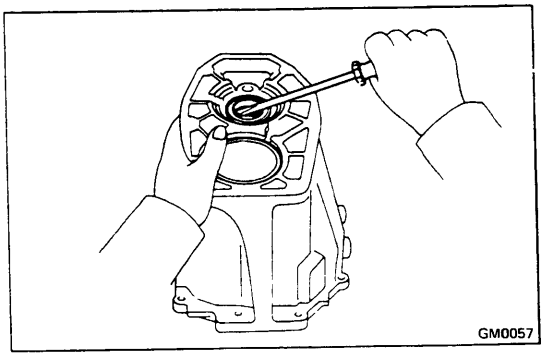

14.-2 (4WD)
IF NECESSARY, REPLACE OIL SEAL

(a) Using a screwdriver, pry out the oil seal.

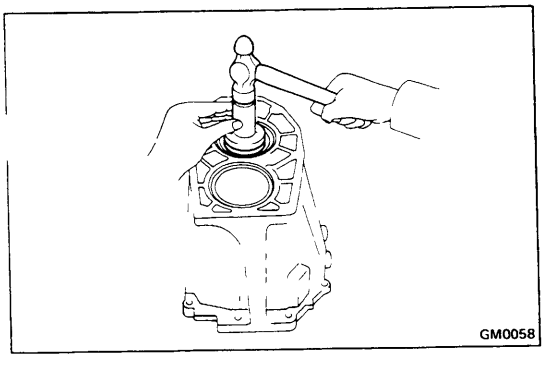

(b) Using SST, drive in the oil seal.
SST 09325-12010

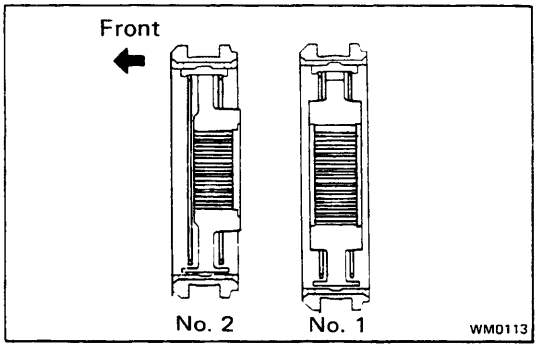

ASSEMBLY OF TRANSMISSION

(See pages MT-5, 6)

1. INSERT CLUTCH HUB NO. 1 AND NO. 2 INTO HUB SLEEVE

(a) Install the clutch hub and shifting keys to the hub sleeve.

(b) Install the shifting key springs under the shifting keys.

CAUTION: Install the key springs positioned so that their end gaps are not in line.

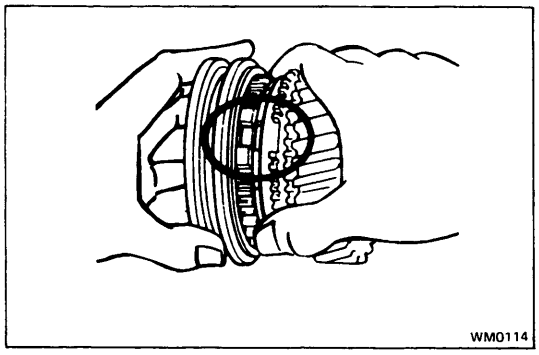

2. INSTALL THIRD GEAR AND CLUTCH HUB NO. 2 ON OUTPUT SHAFT

(a) Apply gear oil to the shaft.

(b) Place the synchronizer ring on the gear and align the ring slots with the shifting keys.

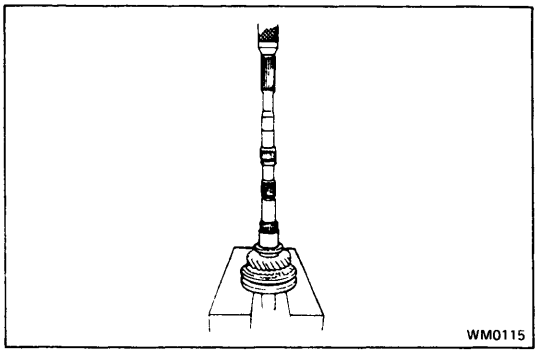

(c) Using a press, install the 3rd gear and clutch hub No. 2.

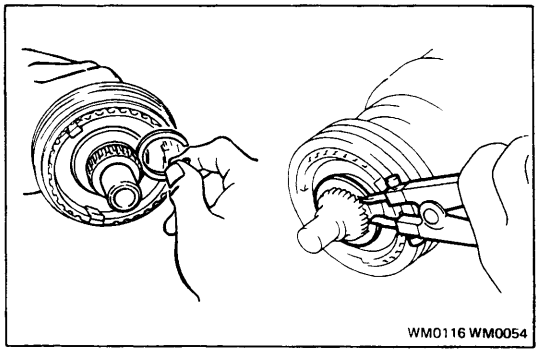

3. INSTALL SNAP RING

Select a snap ring that will allow minimum axial play, and install it on the shaft.

Mark	Thickness	mm (in.)
D	1.80 — 1.85	(0.0709 — 0.0728)
11	1.86 — 1.91	(0.0732 — 0.0752)
12	1.92 — 1.97	(0.0756 — 0.0776)
13	1.98 — 2.03	(0.0780 — 0.0799)
14	2.04 — 2.09	(0.0803 — 0.0823)
15	2.10 — 2.15	(0.0827 — 0.0846)

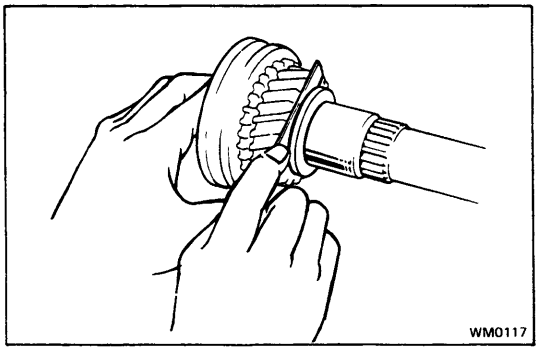

4. MEASURE THIRD GEAR THRUST CLEARANCE

Using a feeler gauge, measure the 3rd gear thrust clearance.

Standard clearance: 0.10 — 0.25 mm (0.0039 — 0.0098 in.)

Maximum clearance: 0.30 mm (0.0118 in.)

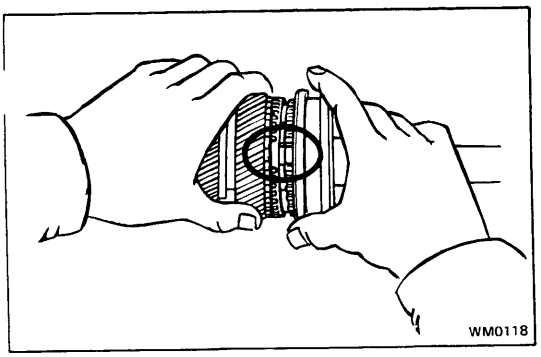

5. **INSTALL SECOND GEAR AND CLUTCH HUB NO. 1**

(a) Apply gear oil to the shaft and needle roller bearing.

(b) Place the synchronizer ring on the gear and align the ring slots with the shifting keys.

(c) Install the needle roller bearing in the 2nd gear.

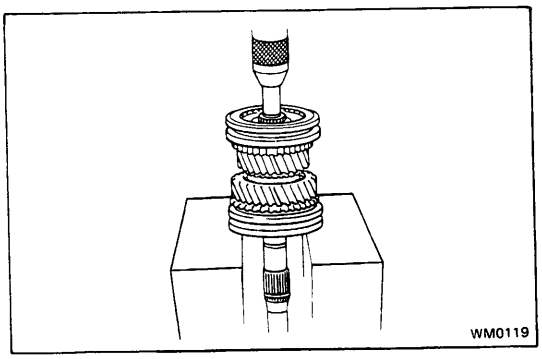

(d) Using a press, install the 2nd gear and clutch hub No. 1.

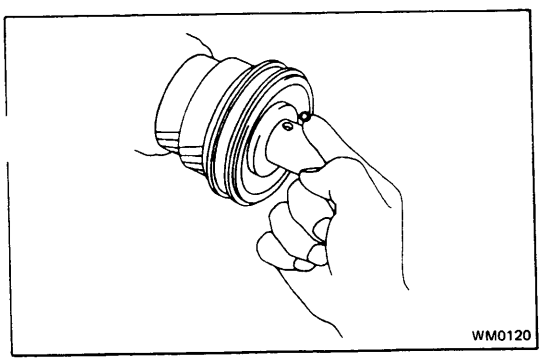

6. **INSTALL LOCKING BALL AND FIRST GEAR ASSEMBLY**

(a) Install the locking ball in the shaft.

(b) Apply gear oil to the bearing.

(c) Assemble the 1st gear, synchronizer ring, needle roller bearing and bearing inner race.

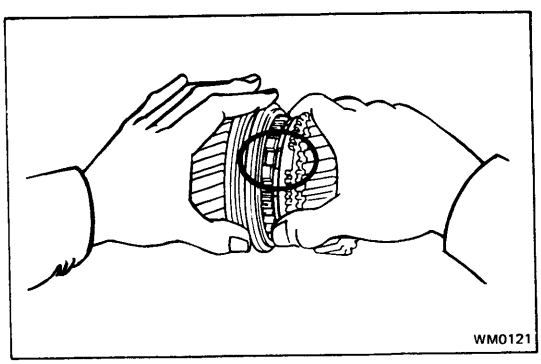

(d) Install the assembly on the output shaft with the synchronizer ring slots aligned with the shifting keys and turn the inner race to align it with the locking ball.

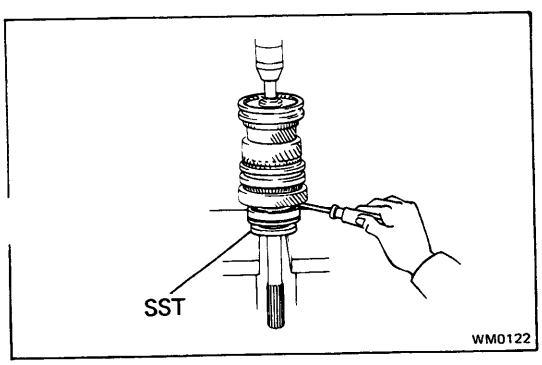

7. **INSTALL OUTPUT SHAFT CENTER BEARING**

Using SST and a press, install the bearing on the output shaft with the outer race snap ring groove toward the rear.

NOTE: Hold the 1st gear inner race to prevent it from falling.

SST 09506-35010

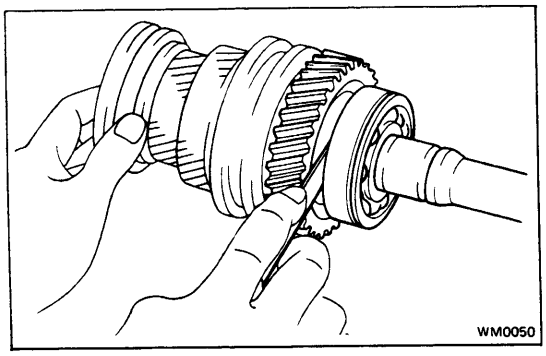

8. **MEASURE FIRST AND SECOND GEAR THRUST CLEARANCE**

Using a feeler gauge, measure the 1st and 2nd gear thr clearance.

Standard clearance: **0.10 — 0.25 mm (0.0039 — 0.0098 in.)**
Maximum clearance: **0.30 mm (0.0118 in.)**

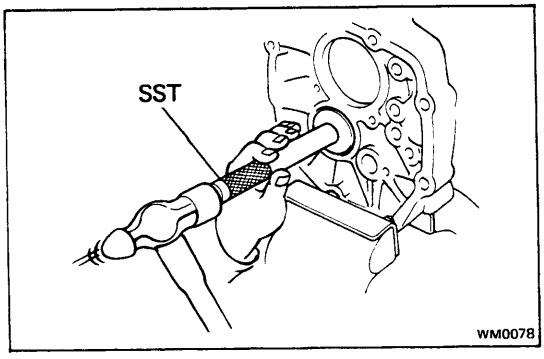

9. **INSTALL OUTPUT SHAFT TO INTERMEDIATE PLATE**

(a) Before installing the output shaft, use SST to remove the counter gear center bearing outer race.

SST 09608-35013

NOTE: Install the outer race after installing the counter gear.

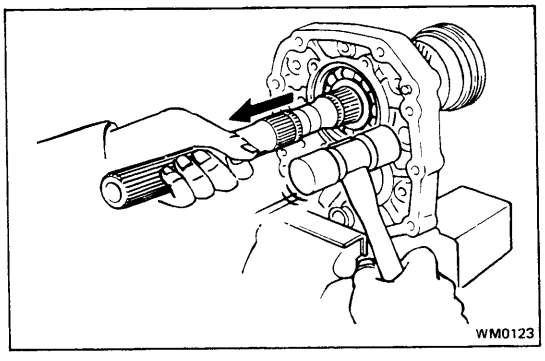

(b) Install the output shaft into the intermediate plate by pulling on the output shaft and tapping on the intermediate plate.

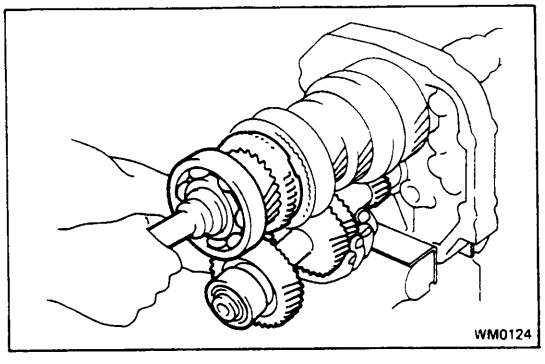

10. **INSTALL INPUT SHAFT AND COUNTER GEAR**

(a) Install the input shaft and counter gear together.

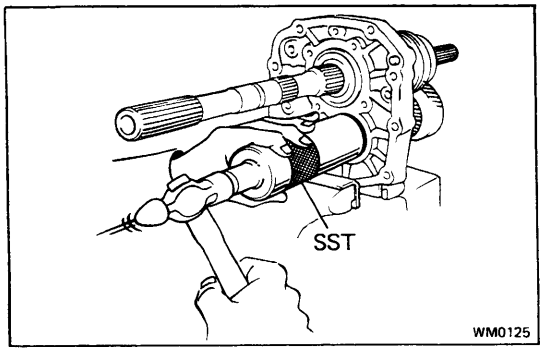

(b) Using SST, install the counter gear center bearing outer race.

SST 09316-60010

NOTE: Be careful not to damage the bearing rollers.

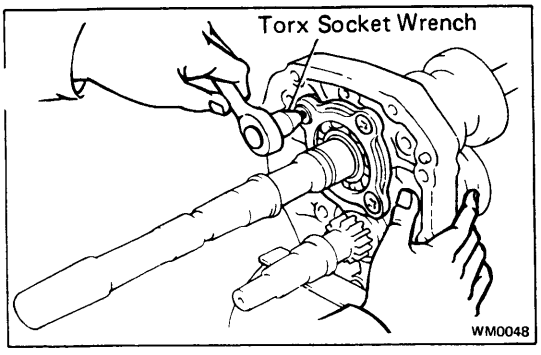

11. INSTALL BEARING RETAINER

(a) Using snap ring pliers, install the bearing snap ring.

NOTE: Be sure the snap ring is flush with the intermediate plate surface.

(b) Using a torx socket wrench, tighten the screws.

Torque: 130 kg-cm (9 ft-lb, 13 N·m)

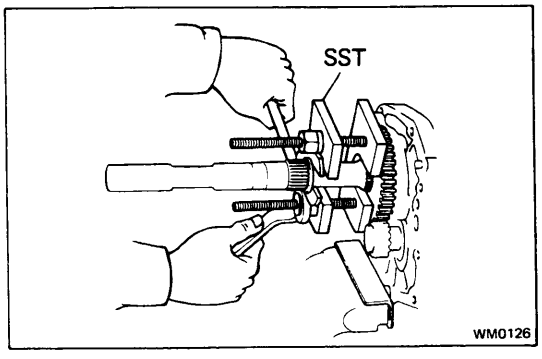

12. INSTALL REVERSE GEAR

Using SST, install the reverse gear.

SST 09312-20011

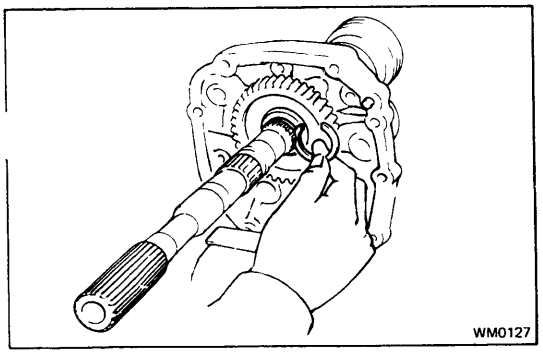

13. INSTALL SNAP RING

Select a snap ring that will allow minimum axial play and install it on the shaft.

Mark	Thickness mm (in.)	Mark	Thickness mm (in.)
5	2.25–2.30 (0.0886–0.0906)	17	2.61–2.66 (0.1028–0.1047)
11	2.30–2.35 (0.0906–0.0925)	18	2.67–2.72 (0.1051–0.1071)
12	2.35–2.40 (0.0925–0.0945)	19	2.73–2.78 (0.1075–0.1094)
13	2.40–2 45 (0.0945–0.0965)	20	2.79–2.84 (0.1098–0.1118)
14	2.45–2.50 (0.0965–0.0984)	21	2.85–2.90 (0.1122–0.1142)
15	2.50–2 55 (0.0984–0.1004)	22	2.91–2.96 (0.1146–0.1165)
16	2.55–2.60 (0.1004–0.1024)	23	2.97–3.02 (0.1169–0.1189)

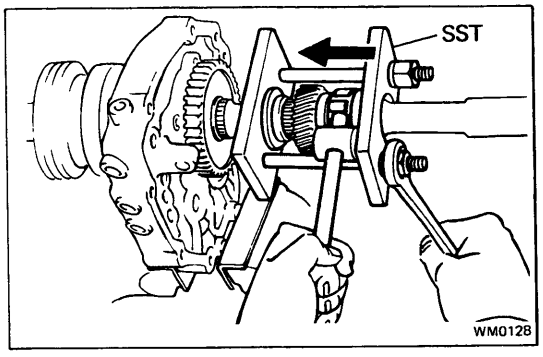

14. (5-Speed) INSTALL FIFTH GEAR AND OUTPUT SHAFT REAR BEARING

Using SST, install the 5th gear and rear bearing.

SST 09312-20011

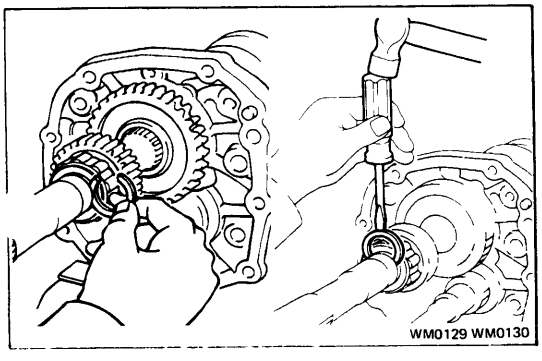

15. (5-Speed) INSTALL SNAP RING

Select a snap ring that will allow minimum axial play and install it on the shaft.

Mark	Thickness mm (in.)	Mark	Thickness mm (in.)
8	2.31–2.36 (0.0909–0.0929)	12	2.55–2.60 (0.1004–0.1024)
9	2.37–2.42 (0.0933–0.0953)	13	2.61–2.66 (0.1028–0.1047)
10	2.43–2.48 (0.0957–0.0976)	14	2.68–2.73 (0.1055–0.1075)
11	2.49–2.54 (0.0980–0.1000)	15	2.74–2.79 (0.1079–0.1098)

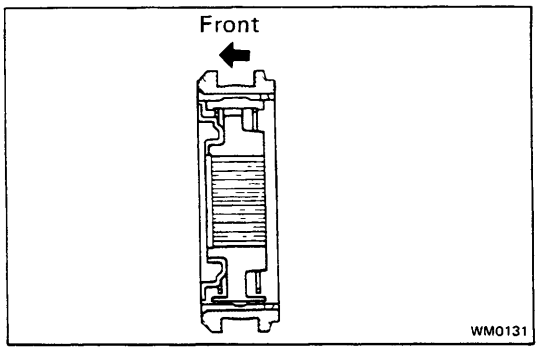

16. (5-Speed)
INSERT CLUTCH HUB NO. 3 INTO HUB SLEEVE

(a) Install clutch hub No. 3 and the shifting key to hub sleeve.

(b) Install the shifting key springs under the shifting keys.

CAUTION: Install the key springs positioned so that their end gaps are not in line.

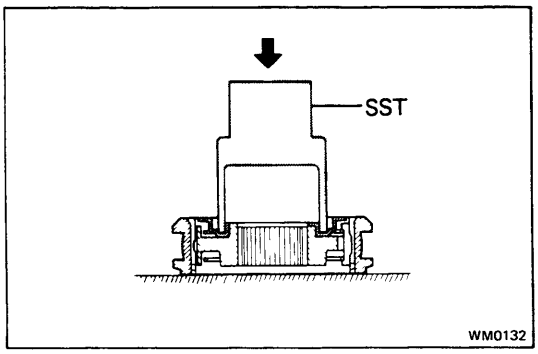

(c) Using SST, install the shifting key retainer.

SST 09238-47012

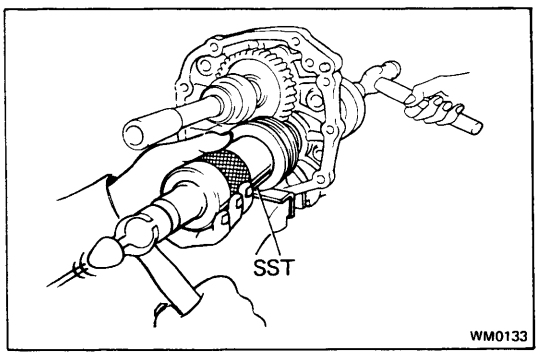

17. (5-Speed)
INSTALL CLUTCH HUB NO. 3

Using SST, drive in clutch hub No. 3.

SST 09316-60010

NOTE: When installing the clutch hub, support the countershaft in front with a 3-5 lb hammer or equivalent.

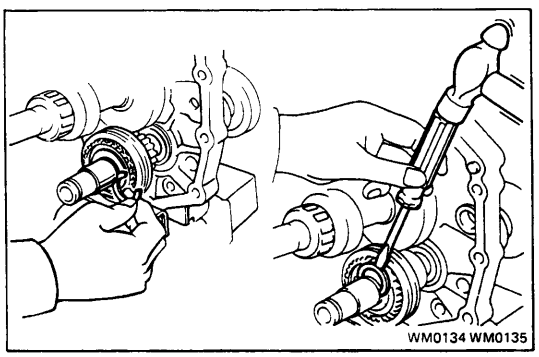

18. (5-Speed)
INSTALL SNAP RING

Select a snap ring that will allow minimum axial play and install it on the shaft.

Mark	Thickness	mm (in.)
2	2.06 — 2.11	(0.0811 — 0.0831)
3	2.12 — 2.17	(0.0835 — 0.0854)
4	2.18 — 2.23	(0.0858 — 0.0878)
5	2.24 — 2.29	(0.0882 — 0.0902)

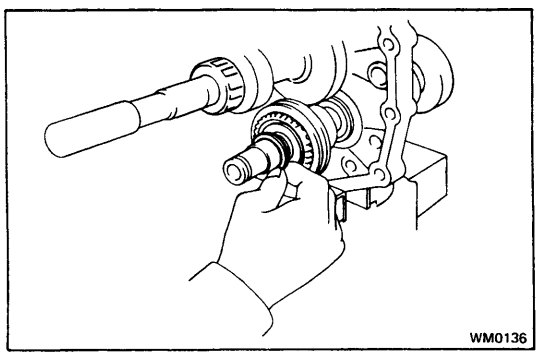

19. (5-Speed)
INSTALL SPACER, SYNCHRONIZER RING, NEEDLE ROLLER BEARING AND COUNTER FIFTH GEAR

(a) Install the bearing spacer.

(b) Apply gear oil to the needle roller bearings.

(c) Assemble the counter 5th gear, synchronizer ring ε needle roller bearings.

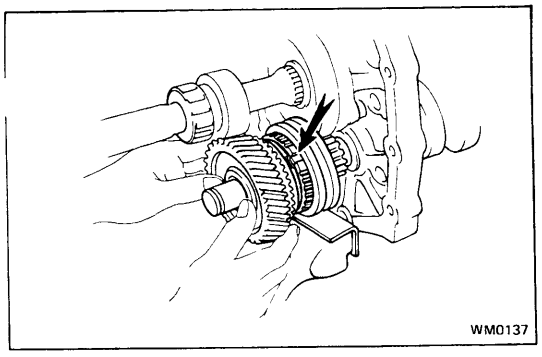

(d) Install the 5th gear assembly with the synchronizer ring slots aligned with the shifting keys.

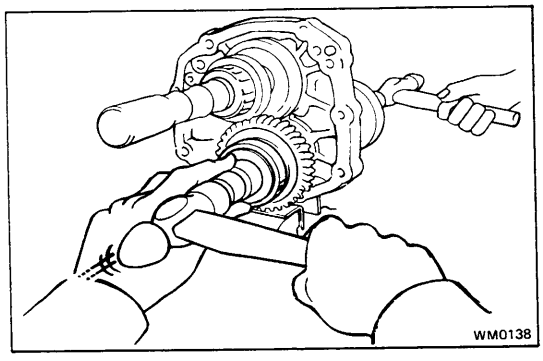

20. (5-Speed)
INSTALL SPACER AND BEARING

(a) Install the spacer.

(b) Install the bearing with the ball shield toward the rear.

(c) Using a hammer and socket wrench, drive in the bearing.

NOTE: When driving in the bearing, support the countershaft in front with a 3-5 lb hammer or equivalent.

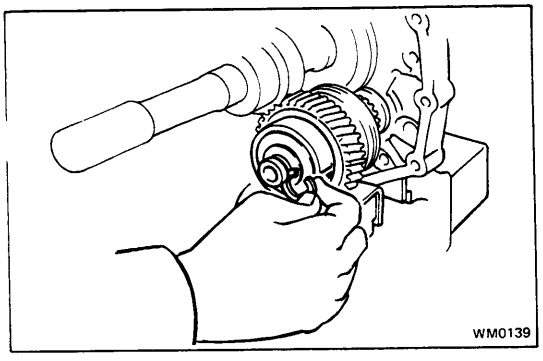

21. (5-Speed)
INSTALL SNAP RING

Select a snap ring that will allow minimum axial play and install it on the shaft.

Mark	Thickness mm (in.)	Mark	Thickness mm (in.)
1	1.90–1.95 (0.0748–0.0768)	5	2.14–2.19 (0.0843–0.0862)
2	1.96–2.01 (0.0772–0.0791)	6	2.20–2.25 (0.0866–0.0886)
3	2.02–2.07 (0.0795–0.0815)	7	2.26–2.31 (0.0890–0.0909)
4	2.08–2.13 (0.0819–0.0839)		

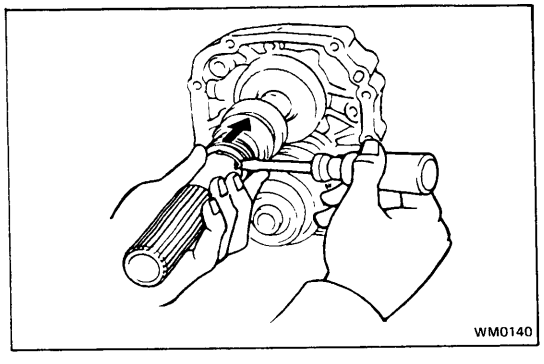

22. INSTALL SPEEDOMETER DRIVE GEAR

(a) Put a clip on the output shaft and install the drive gear clip into the slot.

(b) Slide the drive gear with clip and fit the clip into the holes.

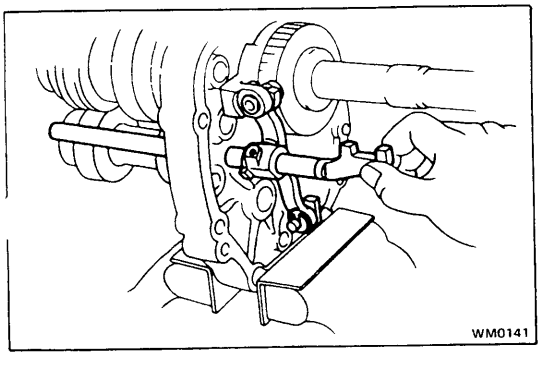

23.-1 (4-Speed)
INSTALL SHIFT FORKS, SHIFT FORK SHAFTS AND REVERSE IDLER GEAR

(a) Install the reverse shift arm and shift fork shaft No. 3.

(1) Put the reverse shift arm into the pivot of the bearing retainer and install shift fork shaft No. 3 to the intermediate plate.

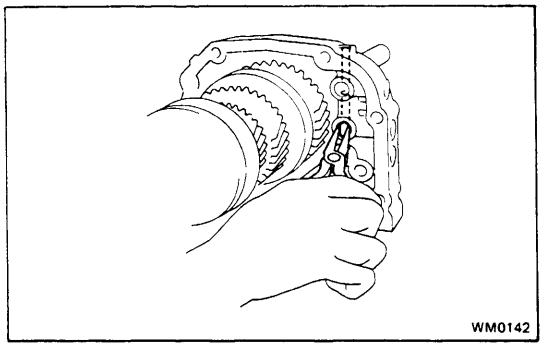

(2) Apply MP grease to interlock pin No. 3 and install the pin into the intermediate plate hole.

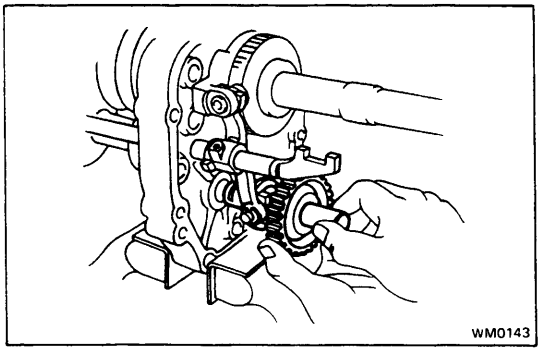

(b) Install the reverse idler gear and shaft.
Align the reverse idler gear groove to the reverse shift arm shoe and install the reverse idler gear shaft to the intermediate plate.

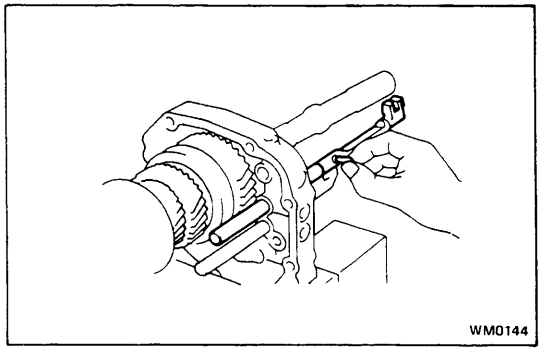

(c) Install shift fork No. 2 and shaft No. 2.

(1) Apply MP grease to interlock pin No. 2 and install the pin into the shaft hole.

(2) Place shift fork No. 2 into the groove of h sleeve No. 2.

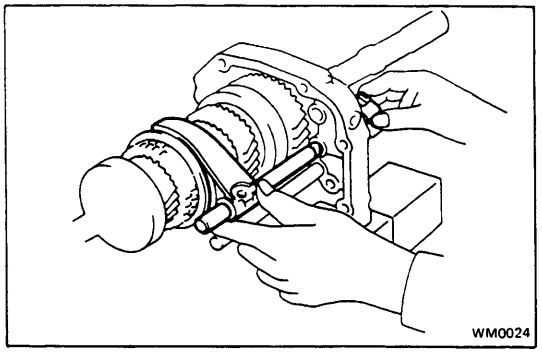

(3) Install fork shaft No. 2 to the shift fork through the intermediate plate.

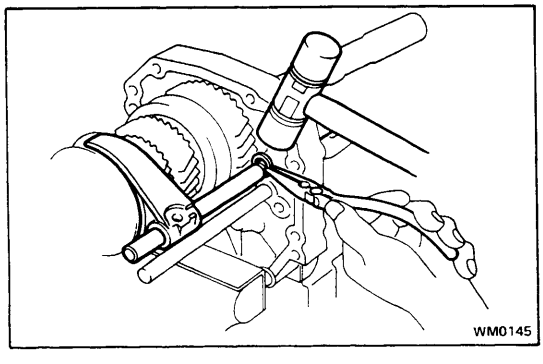

(d) Install the snap ring of fork shaft No.2.

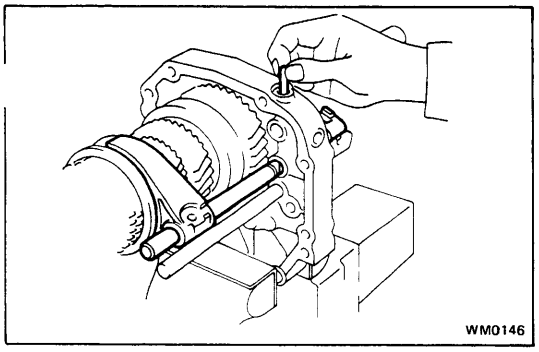

(e) Apply MP grease to interlock pin No. 1 and install the pin into the intermediate plate.

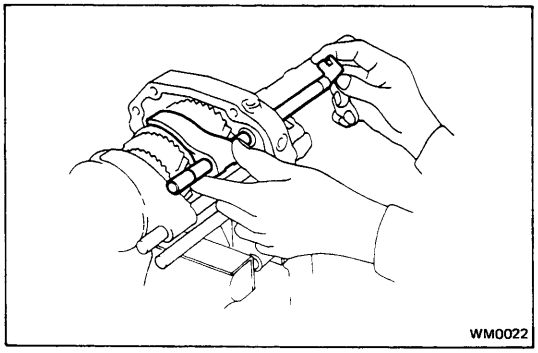

(f) Install shift fork No. 1 and fork shaft No. 1.
(1) Install shift fork No. 1 into the groove of hub sleeve No. 1.
(2) Insert fork shaft No. 1 to the shift fork through the intermediate plate.

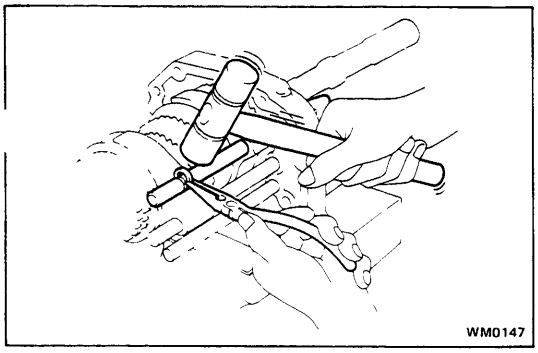

(g) Install the snap ring of fork shaft No. 1.

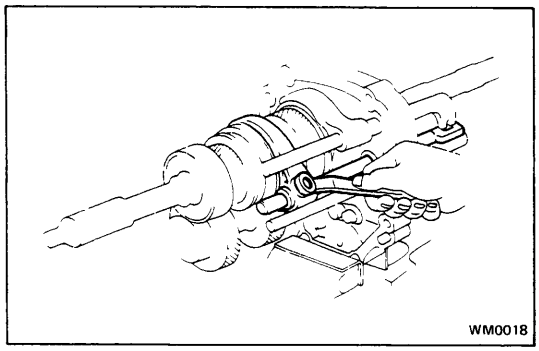

(h) Install the shift fork set bolts with lock washers.

Torque: 100 — 150 kg-cm (8 — 10 ft-lb, 10 — 14 N·m)

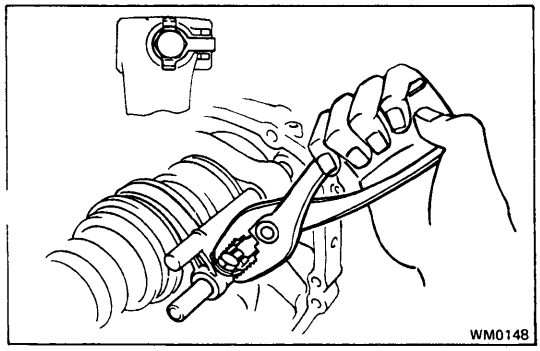

(i) Using pliers, stake the bolts with lock washers.

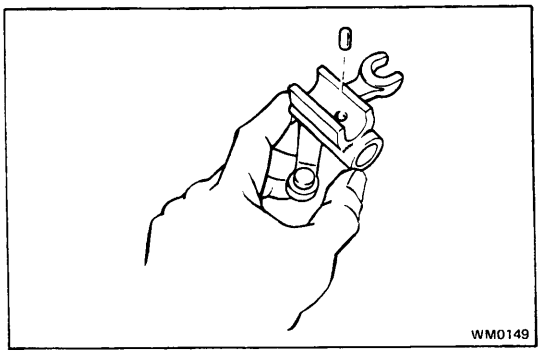
WM0149

23.-2 (5-Speed)

INSTALL SHIFT FORKS, SHIFT FORK SHAFTS AND REVERSE IDLER GEAR

(a) Install the reverse idler gear and shaft.

(b) Install shift fork No. 3, fork shaft No. 3 and reverse shift arm.

(1) Coat the pin with MP grease and insert it into the reverse shift head hole.

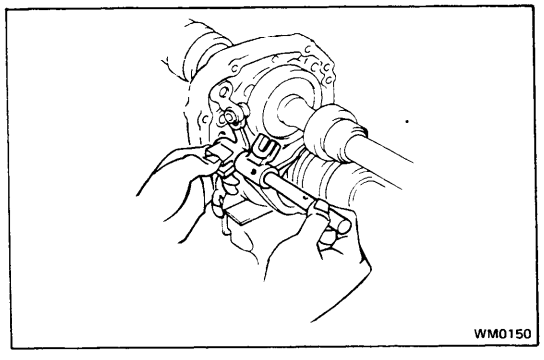
WM0150

(2) Insert shift fork shaft No. 3 through shift fork No. 3 and the reverse shift arm.

(3) Align shift fork No. 3 with the hub sleeve No. 3 groove, put the reverse shift arm into the pivot of bearing retainer and align the reverse shift arm shoe with the reverse idler gear groove. Install shift fork shaft No. 3 to the intermediate plate.

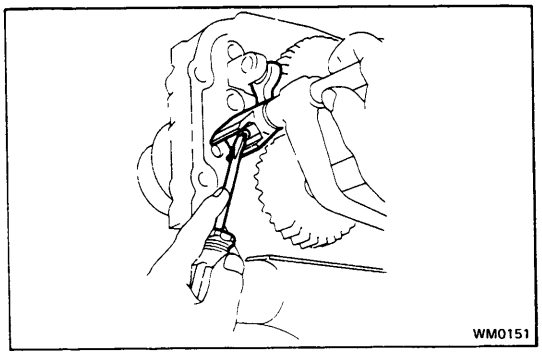
WM0151

(c) Install shift fork shaft No. 4.

(1) Push the pin, which was inserted into the reverse shift arm hole, into the groove of shift fork shaft No. 3.

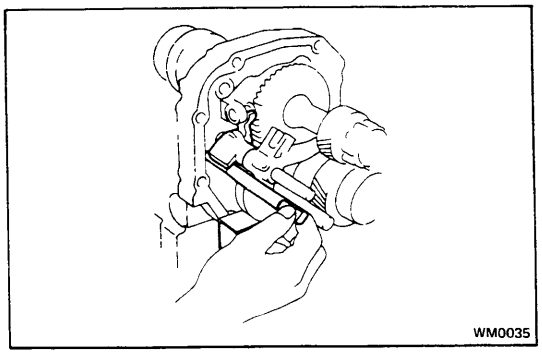
WM0035

(2) Install shift fork shaft No. 4 to the intermediate plate over the reverse shift arm.

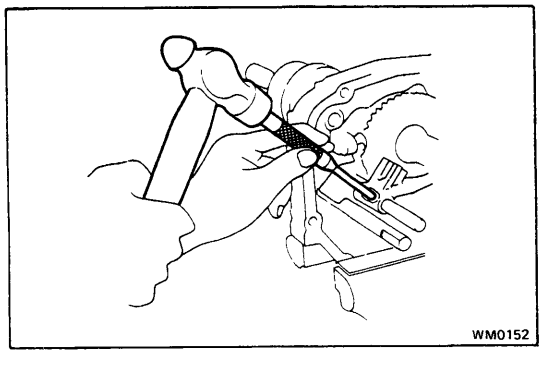
WM0152

(d) Using a pin punch, drive in the slotted spring pin until it is flush with the fork.

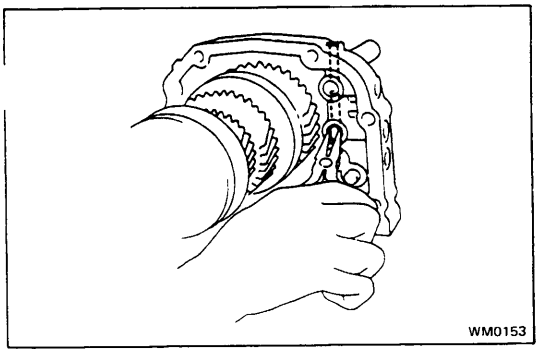

(e) Apply MP grease to interlock pin No. 3 and install the pin into the intermediate plate hole.

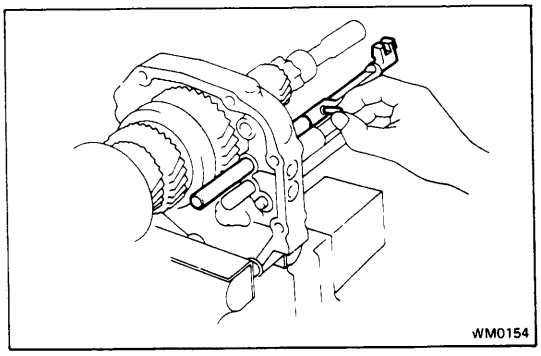

(f) Install shift fork No. 2 and shaft No. 2.

(1) Apply MP grease to interlock pin No. 2 and install the pin into the shaft hole.

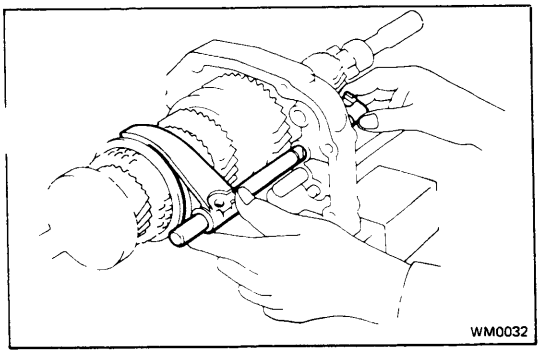

(2) Place shift fork No. 2 into the groove of hub sleeve No. 2.

(3) Install fork shaft No. 2 to the shift fork through the intermediate plate.

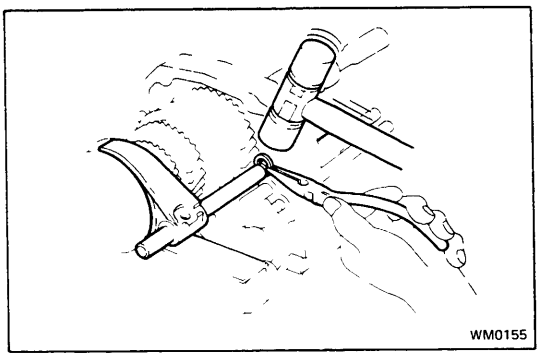

(g) Install the snap ring of fork shaft No. 2.

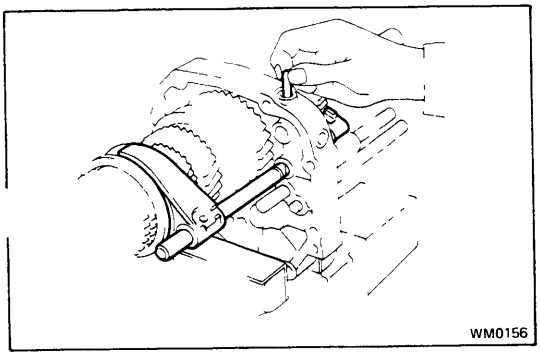

(h) Apply MP grease to interlock pin No. 1 and install the pin into the intermediate plate.

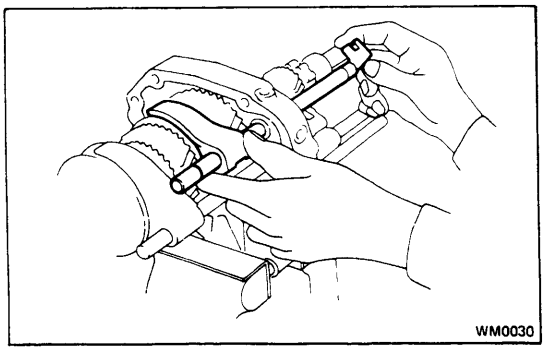

(i) Install shift fork No. 1 and fork shaft No. 1.
(1) Install shift fork No. 1 into the groove of hub sleeve No. 1.
(2) Insert fork shaft No. 1 to the shift fork through the intermediate plate.

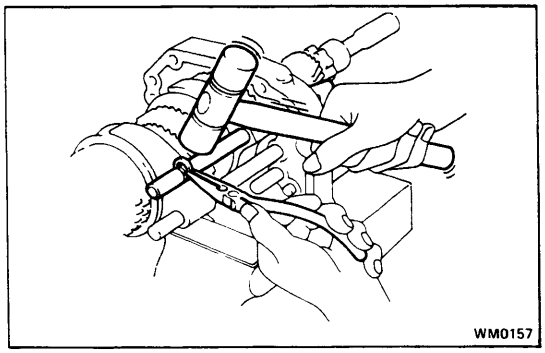

(j) Install the snap ring of fork shaft No. 1.

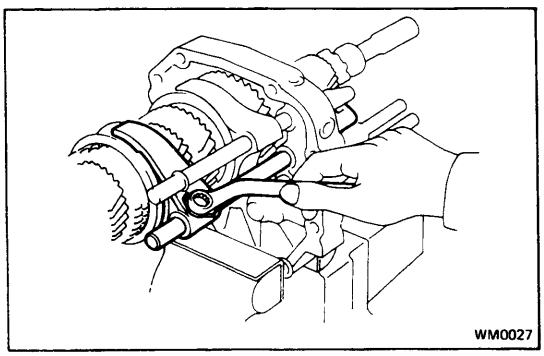

(k) Install the shift fork set bolts with lock washers.
Torque: 125 kg-cm (9 ft-lb, 12 N·m)

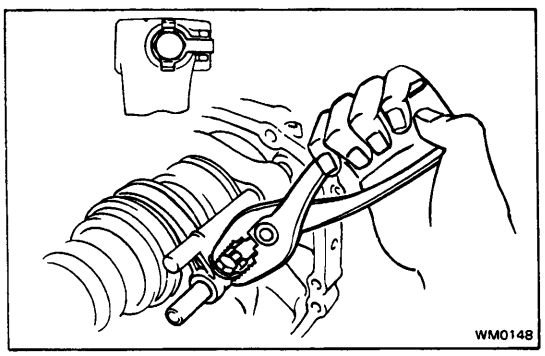

(l) Using pliers, stake the bolts with lock washers.

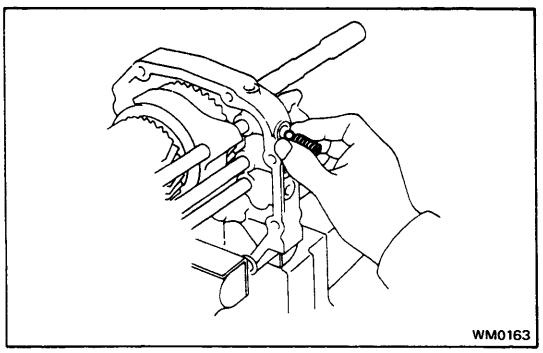

24. INSTALL LOCKING BALL AND SPRING
(a) Install the balls and springs into each hole.
(b) Apply liquid sealer to the plugs.

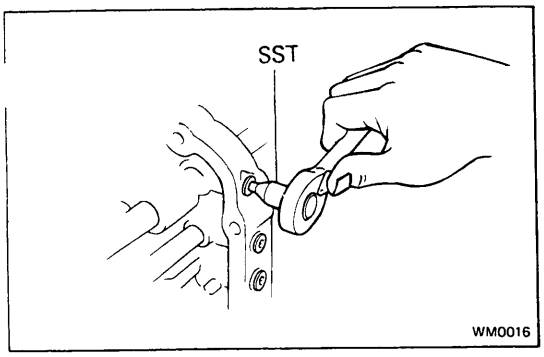

(c) Using SST, tighten the four plugs.

SST 09313-30021

Torque: 250 kg-cm (18 ft-lb, 25 N·m)

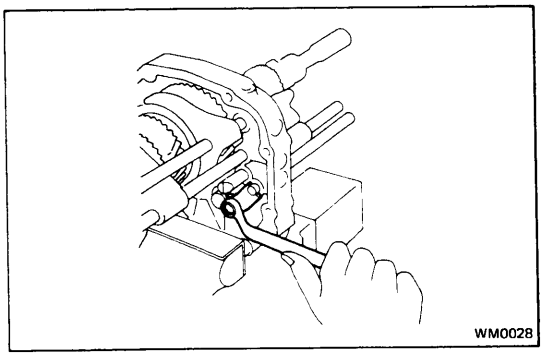

25. INSTALL REVERSE IDLER GEAR SHAFT STOPPER

Install the reverse idler gear shaft stopper and tighten the bolt.

Torque: 250 kg-cm (18 ft-lb, 25 N·m)

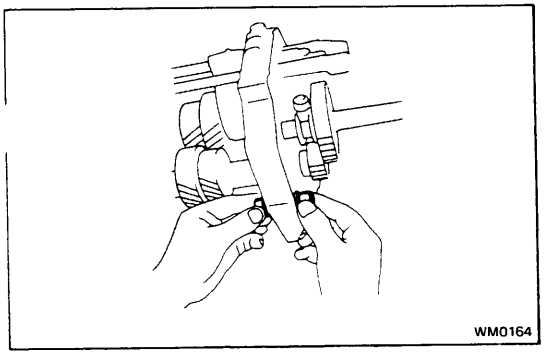

26. DISMOUNT INTERMEDIATE PLATE FROM VISE

(a) Dismount the intermediate plate from the vise.

(b) Remove the bolts, nuts, plate washers and gasket.

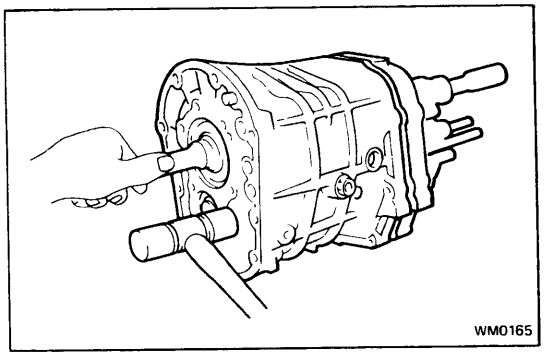

27. INSTALL TRANSMISSION CASE TO INTERMEDIATE PLATE

(a) Align each bearing outer race and each shift fork shaft end with the case holes.

(b) Using a plastic hammer, tap on the case to install it.

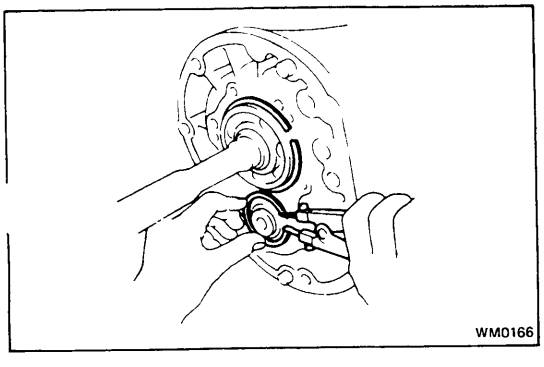

28. INSTALL TWO BEARING SNAP RINGS

Using snap ring pliers, install the two snap rings.

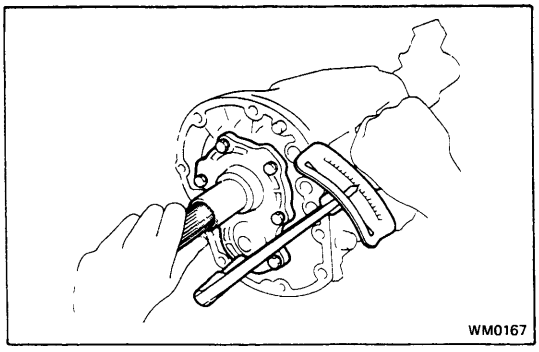

29. INSTALL FRONT BEARING RETAINER

(a) Install the bearing retainer with a new gasket.

(b) Apply liquid sealer to the bolts.

(c) Install and torque the bolts.

Torque: 250 kg-cm (18 ft-lb, 25 N·m)

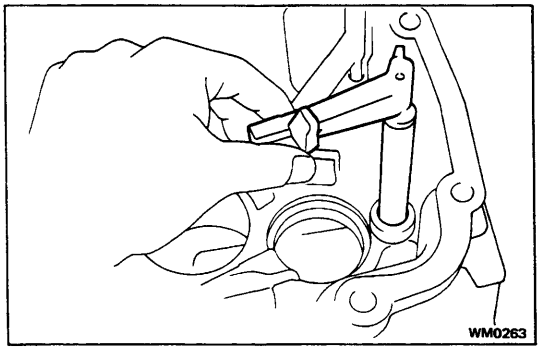

30. INSTALL EXTENSION HOUSING (2WD) OR TRANSFER ADAPTER (4WD)

(a) Place the gasket in position on the intermediate plate.

(b) Insert shift and select lever into the extension housing (2WD) or the transfer adapter.

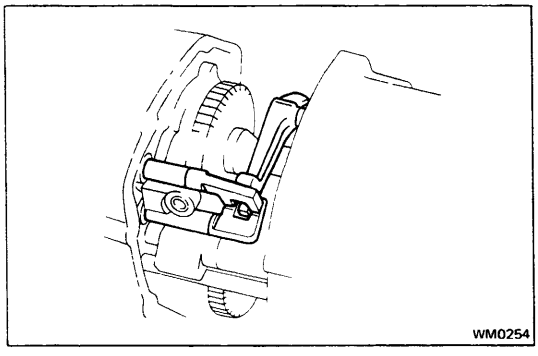

(c) Connect the shift and select lever to the shift fork shaft.

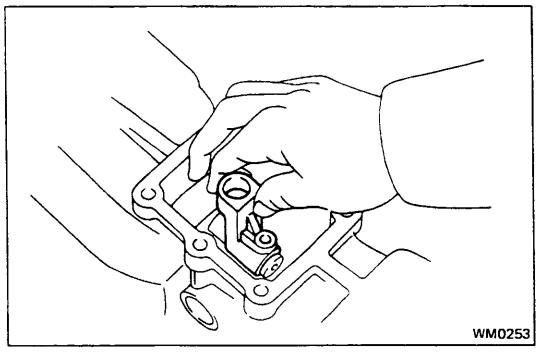

(d) Install shift lever housing to shift and select lever shaft, push in the extension housing (2WD) or the transfer adapter (4WD).

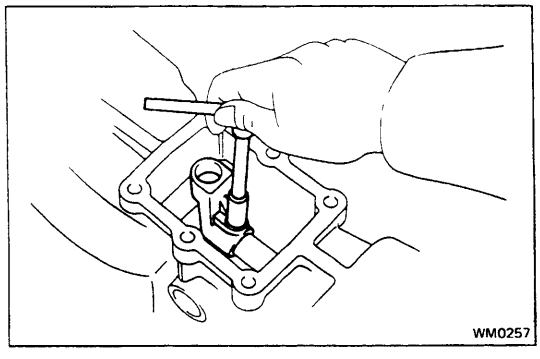

(e) Install and torque the bolt.

Torque: 400 kg-cm (29 ft-lb, 39 N·m)

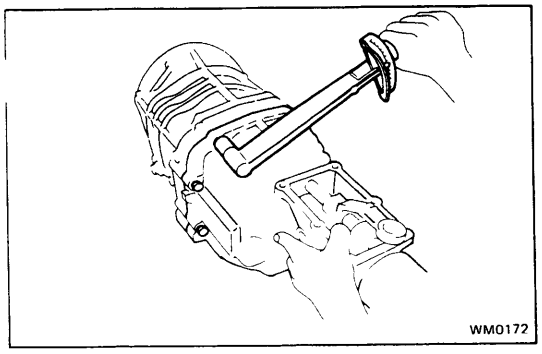

31. **INSTALL AND TORQUE EXTENSION HOUSING BOLTS (2WD) OR TRANSFER ADAPTER BOLTS (4WD)**

Torque: 370 kg-cm (27 ft-lb, 36 N·m)

32. **AFTER INSTALLING EXTENSION HOUSING (2WD) OR TRANSFER ADAPTER (4WD), CHECK FOLLOWING ITEMS:**

(a) Check to see that input shaft and output shaft rotate smoothly.

(b) Check to see that shifting can be made smoothly to all positions.

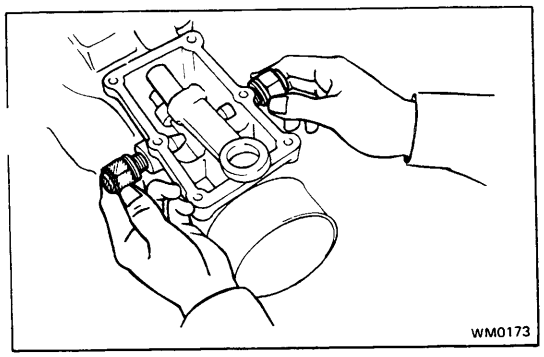

33. **INSTALL RESTRICT PINS**

(a) Install the restrict pins together with a gasket.

NOTE: (4-Speed)
Install the screw plug on the reverse gear side.

(5-Speed)
Install the black pin on the reverse gear/5th gear side.

(b) Torque the restrict pins.

Torque: 410 kg-cm (30 ft-lb, 40 N·m)

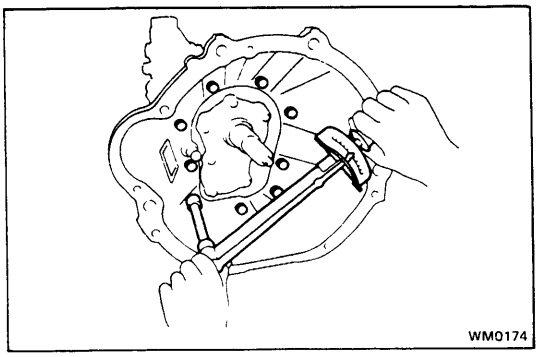

34. **INSTALL CLUTCH HOUSING**

(a) Install the clutch housing.

(b) Install and torque the bolts.

Torque: 375 kg-cm (27 ft-lb, 37 N·m)

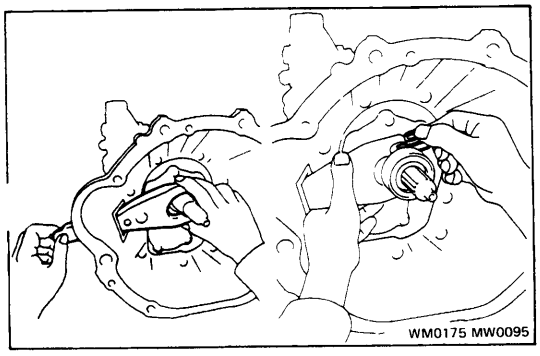

35. **INSTALL RELEASE FORK AND BEARING**

Apply molybdenum disulphide lithium base grease to the following parts:

- Release bearing hub inside groove
- Input shaft spline
- Release fork contact surface

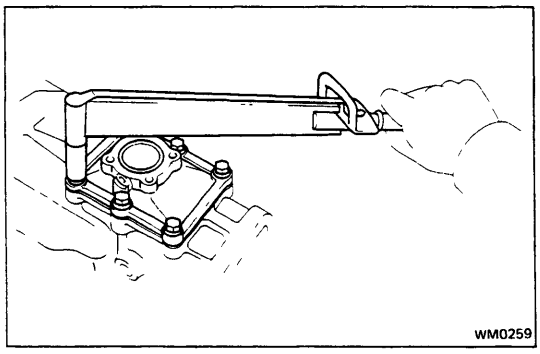

36. INSTALL SHIFT LEVER RETAINER

(a) Install the shift lever retainer with a new gasket

(b) Install and torque the four bolts.

Torque: 185 kg-cm (13 ft-lb, 18 N·m)

37. (2WD)
INSTALL SPEEDOMETER DRIVEN GEAR

(a) Install the speedometer driven gear.

(b) Install the bolt with lock plate.

(c) Torque the bolt.

Torque: 130 kg-cm (9 ft-lb, 13 N·m)

38. INSTALL BACK-UP LIGHT SWITCH

(a) Install and torque the back-up light switch.

Torque: 410 kg-cm (30 ft-lb, 40 N·m)

(b) Install the wire clamp.

G52 TRANSMISSION

COMPONENTS

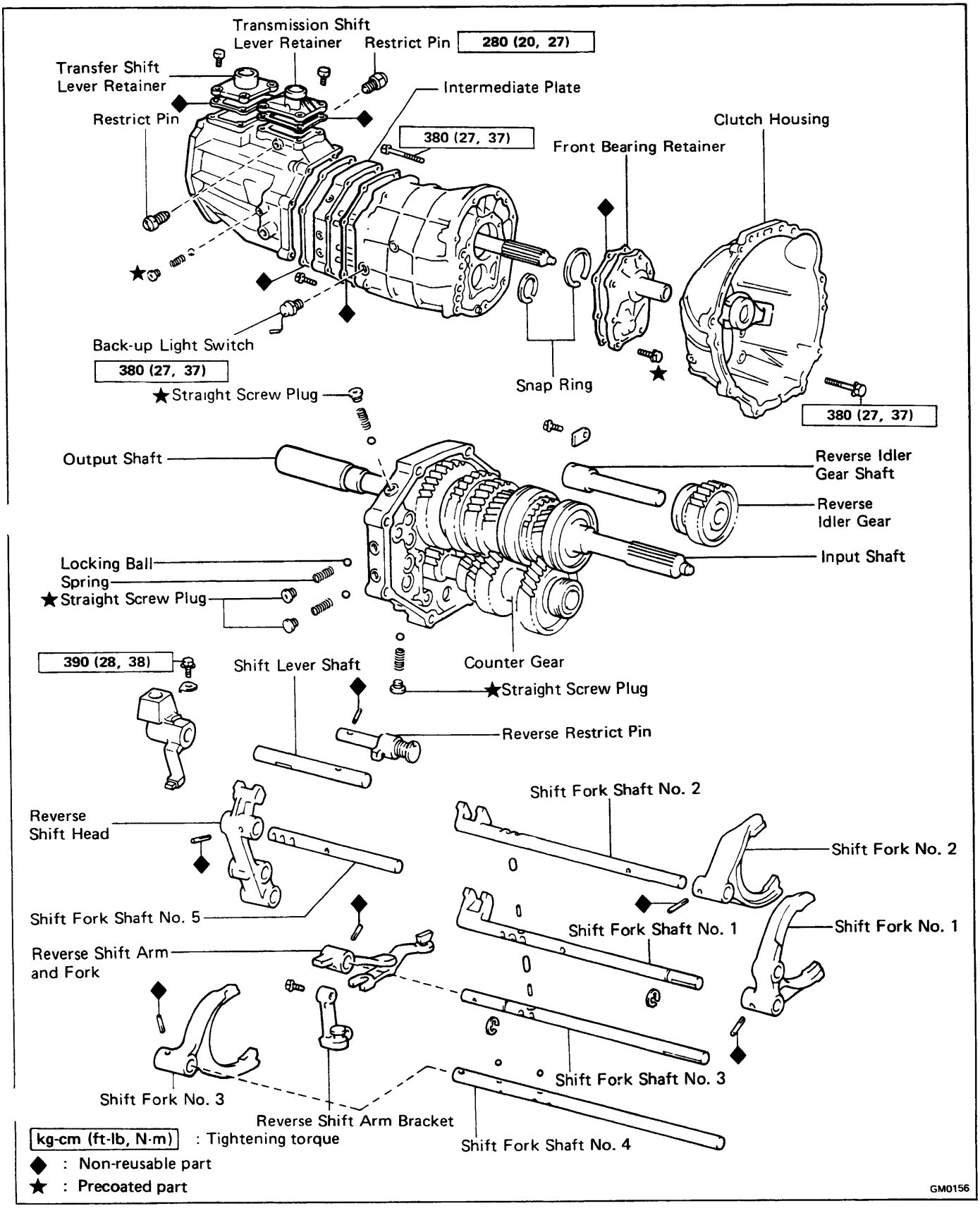

COMPONENTS (Cont'd)

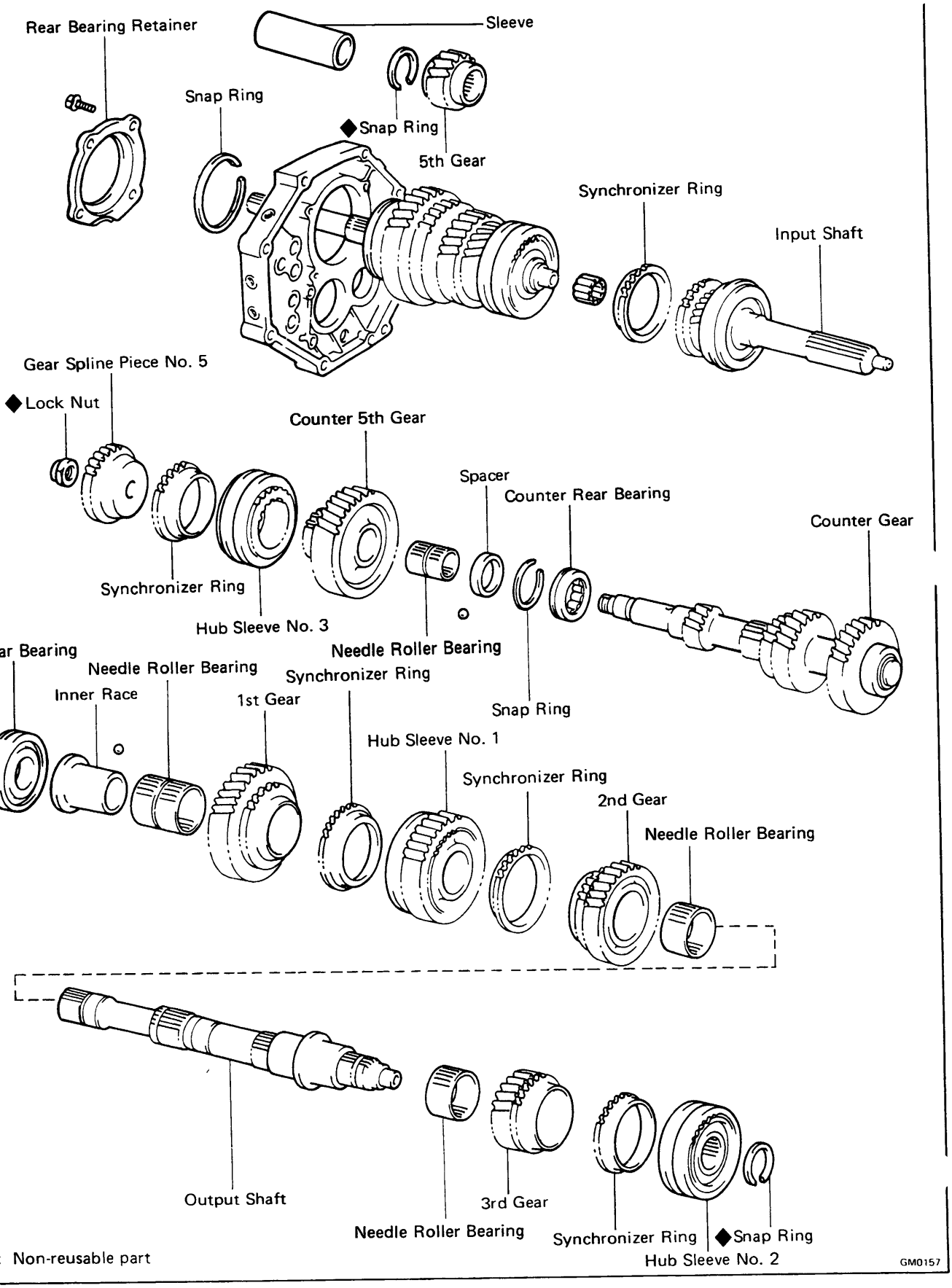

◆ : Non-reusable part

GM0157

DISASSEMBLY OF TRANSMISSION

(See pages MT-39, 40)

1. REMOVE BACK-UP LIGHT SWITCH, SPEEDOMETER DRIVEN GEAR (2WD), SHIFT LEVER RETAINER AND RESTRICT PINS

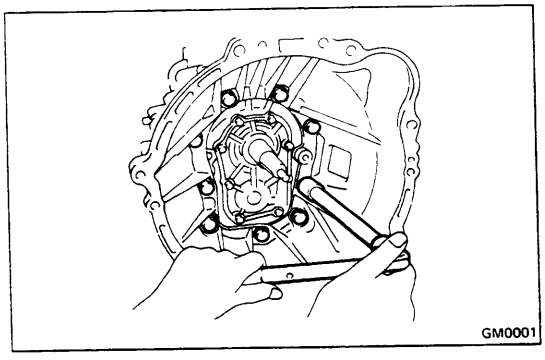

2. REMOVE CLUTCH HOUSING FROM TRANSMISSION CASE

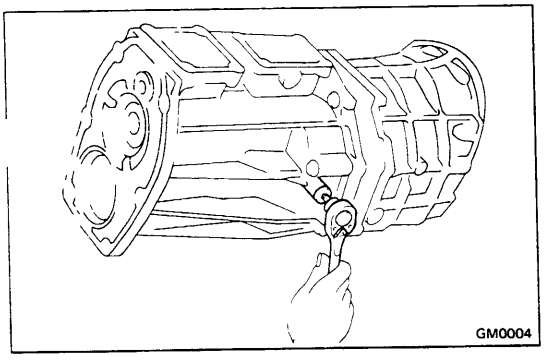

3. REMOVE STRAIGHT SCREW PLUG, SPRING AND BALL

(a) Using a torx socket wrench, remove the screw plug from the transfer adapter.

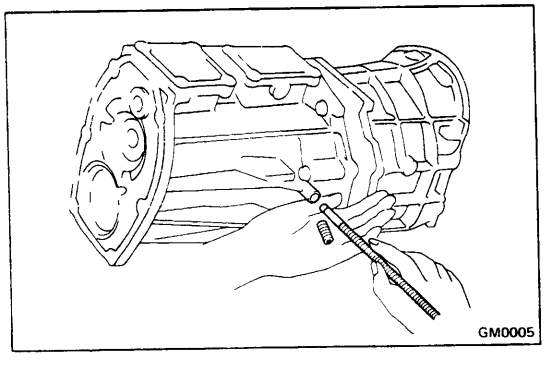

(b) Using a magnetic finger, remove the spring and ball.

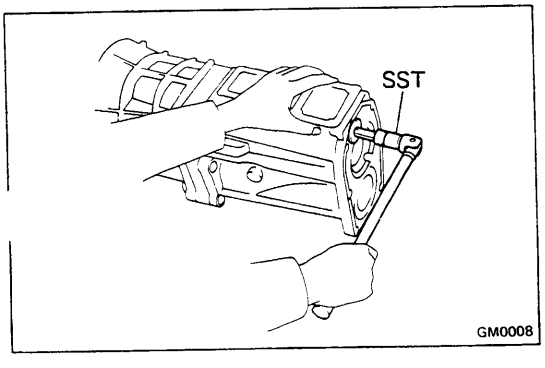

4. REMOVE TRANSFER ADAPTER

(a) Using SST, remove the plug from the transfer adapter.

SST 09923-00010

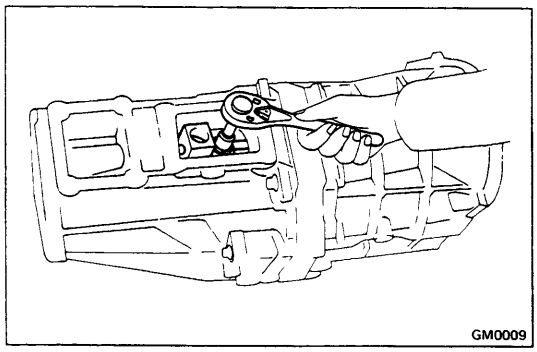
GM0009

(b) Remove the shift lever housing set bolt and lock washer.

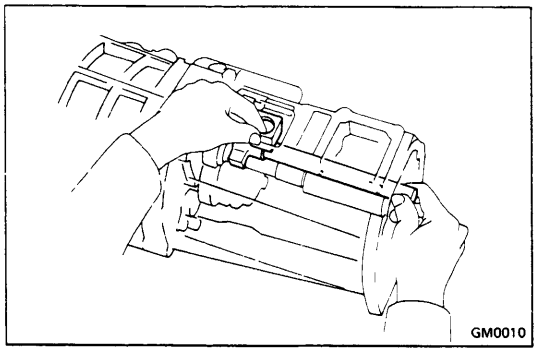
GM0010

(c) Remove the shift lever shaft and housing.

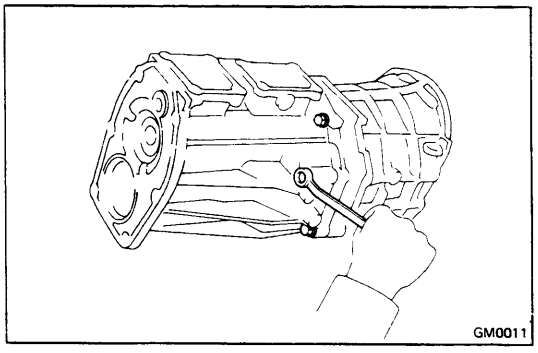
GM0011

(d) Remove the eight bolts.

(e) Using a plastic hammer, remove the transfer adapter.

NOTE: Leave the gasket attached to the intermediate plate.

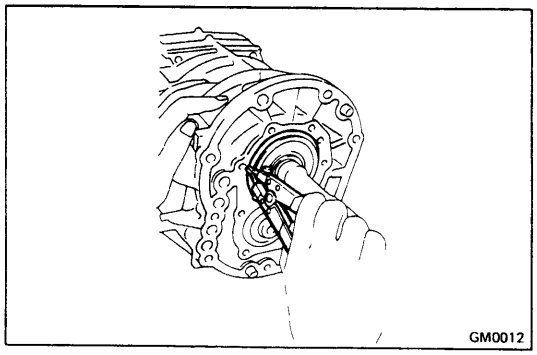
GM0012

5. REMOVE FRONT BEARING RETAINER AND TWO BEARING SNAP RINGS

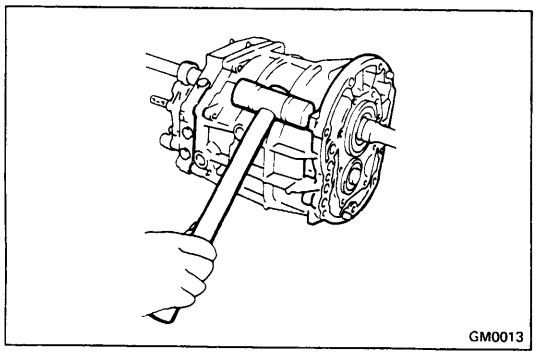
GM0013

6. SEPARATE INTERMEDIATE PLATE FROM TRANSMISSION CASE

(a) Using a plastic hammer, carefully tap off the transmission case.

(b) Remove the transmission case from the intermediate plate.

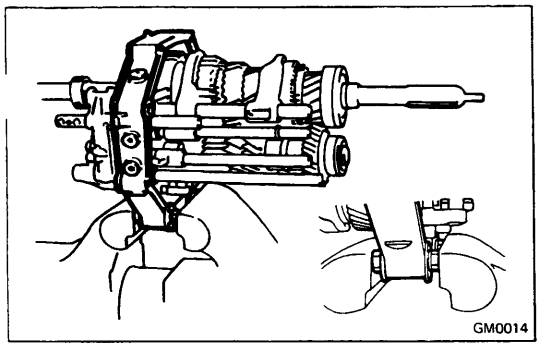

7. MOUNT INTERMEDIATE PLATE IN VISE

(a) Use two clutch housing bolts, plate washers and suitable nuts as shown.

CAUTION: Install the plate washers in reverse of normal. Increase or decrease plate washers so that the bolt tip and front tip surface of the nut are aligned.

(b) Mount the intermediate plate in a vise.

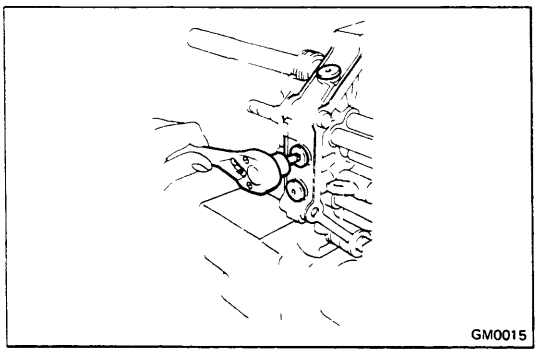

8. REMOVE STRAIGHT SCREW PLUGS, LOCKING BALLS AND SPRINGS

(a) Using a torx socket wrench, remove the four plugs.

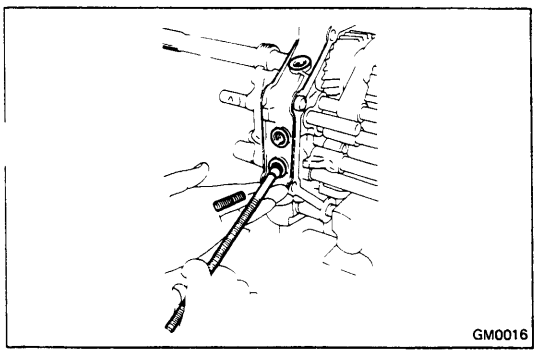

(b) Using a magnetic finger, remove the springs and balls.

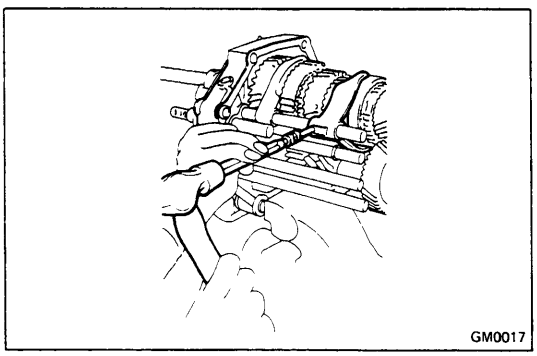

9. REMOVE SLOTTED SPRING PINS

Using a pin punch and hammer, drive out the five pins.

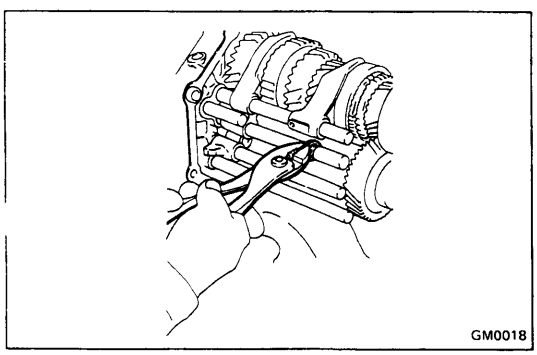

10. REMOVE TWO E-RING

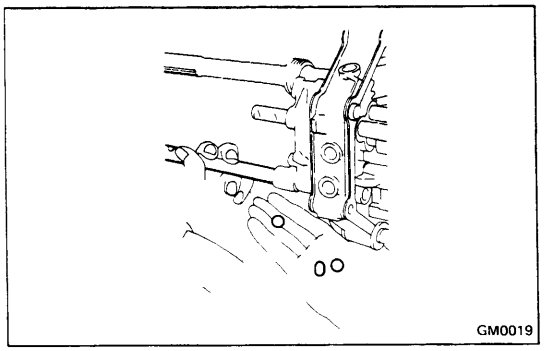

11. **REMOVE SHIFT FORK SHAFT NO.4 AND SHIFT FORK NO.3**

(a) Pull out shift fork shaft No.4 from the intermedi plate.

CAUTION: The locking balls and interlock pin will fall from the holes so be sure to catch them by hand. If they do not come out, remove them with a magnetic finger.

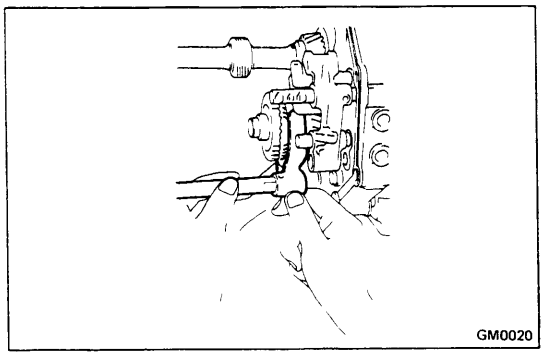

(b) Remove shift fork shaft No.4 and shift fork No.3.

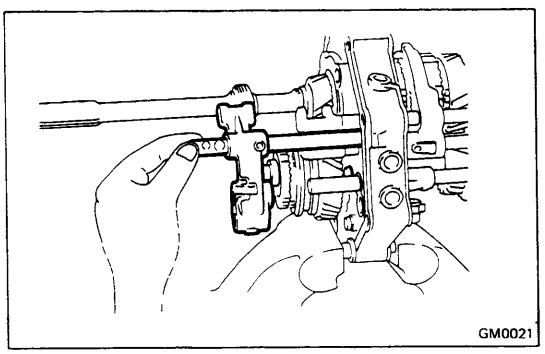

12. **REMOVE REVERSE SHIFT HEAD AND SHIFT FORK SHAFT NO.5**

Pull out shift fork shaft No.5 from the intermediate plate, and remove it with the reverse shift head.

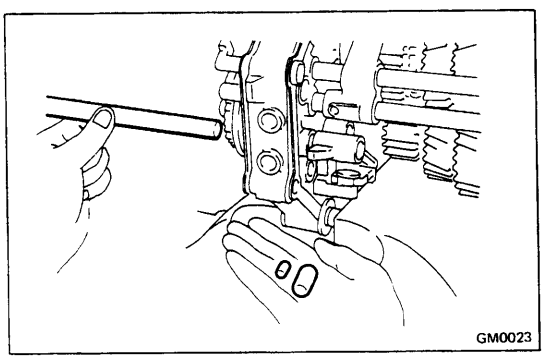

13. **REMOVE SHIFT FORK SHAFT NO.3**

Pull out shift fork shaft No.3 from the intermediate plate.

CAUTION: The interlock pins will fall from the hole so be sure to catch them by hand. If they do not come out, remove them with a magnetic finger.

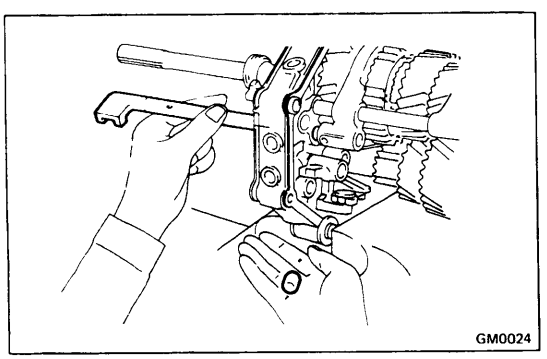

14. **REMOVE SHIFT FORK SHAFT NO.1**

Pull out shift fork shaft No.1 from the intermediate plate.

CAUTION: The interlock pin will fall from the hole so be sure to catch it by hand. If it does not come out, remove it with a magnetic finger.

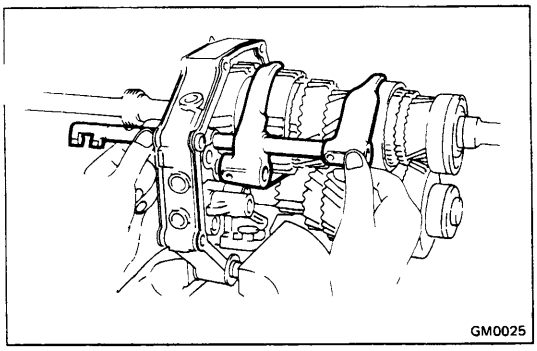

15. REMOVE SHIFT FORK SHAFT NO.2, SHIFT FORK NO.2 AND SHIFT FORK NO.1

Pull out shift fork shaft No.2 and remove shift fork No.2 and No.1.

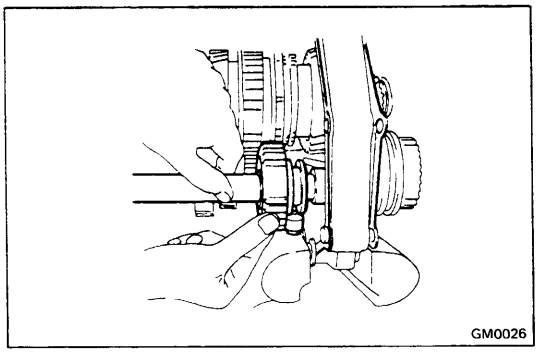

16. REMOVE REVERSE IDLER GEAR AND SHAFT

(a) Remove the reverse idler gear shaft stopper.

(b) Remove the reverse idler gear and shaft.

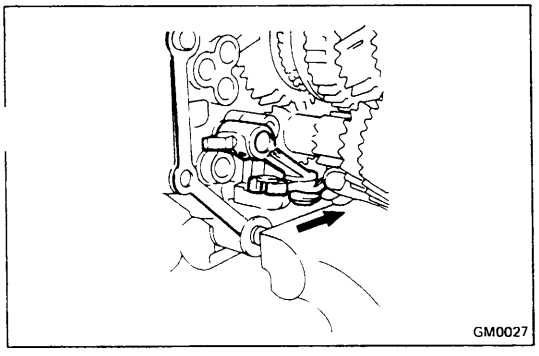

17. REMOVE REVERSE SHIFT ARM FROM REVERSE SHIFT ARM BRACKET

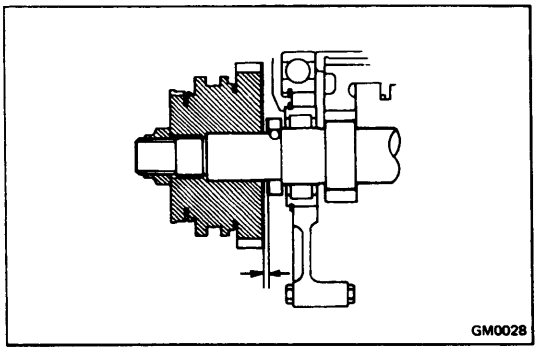

18. MEASURE COUNTER FIFTH GEAR THRUST CLEARANCE

Using a feeler gauge, measure the counter 5th gear thrust clearance.

Standard clearance:	**0.10 — 0.30 mm (0.0039 — 0.0118 in.)**
Maximum clearance:	**0.30 mm (0.0118 in.)**

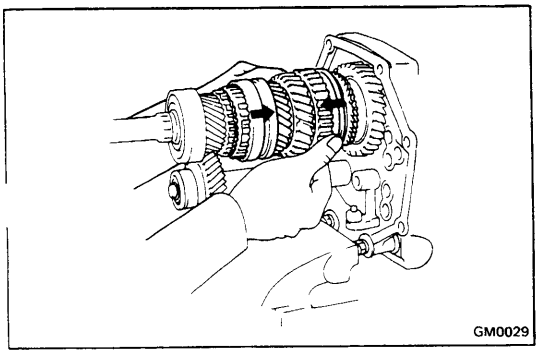

19. REMOVE GEAR SPLINE PIECE NO.5, SYNCHRONIZER RING, NEEDLE ROLLER BEARINGS AND COUNTER FIFTH GEAR WITH HUB SLEEVE NO.3

(a) Engage the gear double meshing.

(b) Using a hammer and chisel, loosen the staked part of the nut.

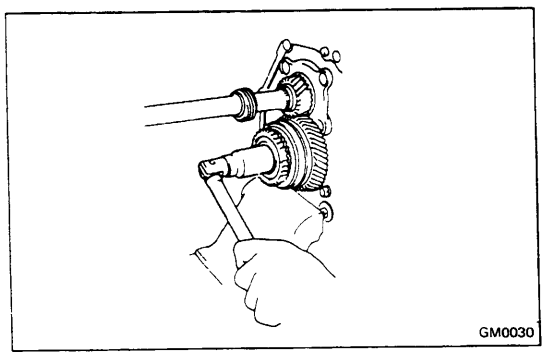

(c) Remove the lock nut.

(d) Disengage the gear double meshing.

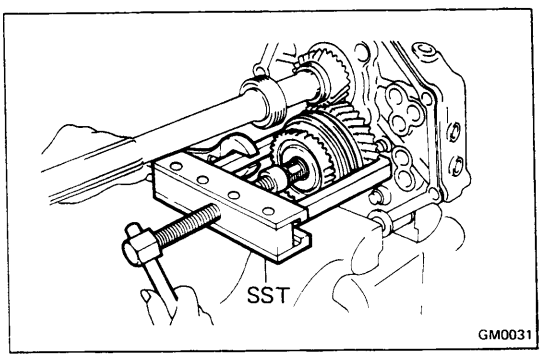

(e) Using SST, remove gear spline piece No.5, synchronizer ring, needle roller bearing and counter 5th gear.

SST 09213-27010

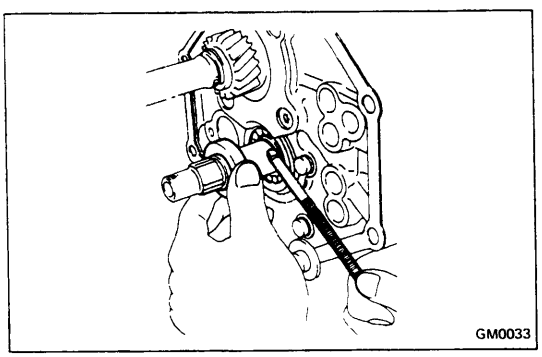

20. REMOVE SPACER AND BALL

(a) Remove the spacer.

(b) Using a magnetic finger, remove the ball.

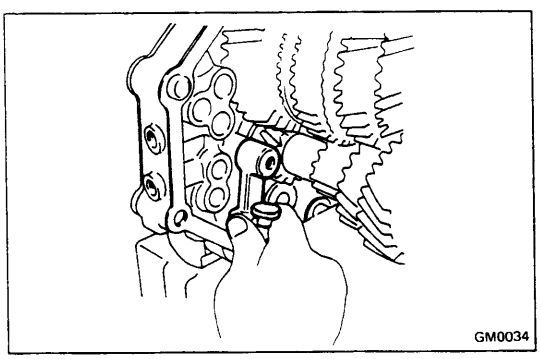

21. REMOVE REVERSE SHIFT ARM BRACKET

Remove the two bolts and the reverse shift arm bracket.

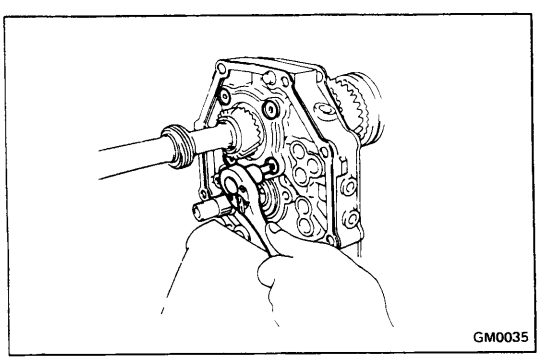

22. REMOVE REAR BEARING RETAINER

Using a forx socket wrench, remove the four bolts.

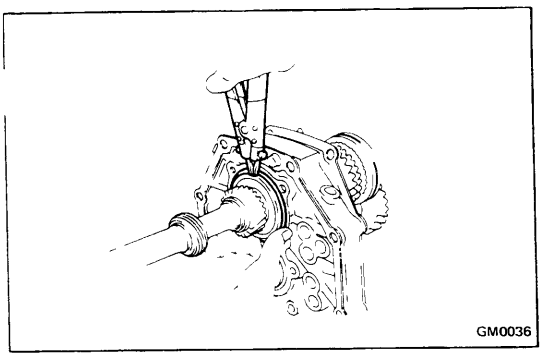

23. REMOVE BEARING SNAP RING

Using snap ring pliers, remove the snap ring.

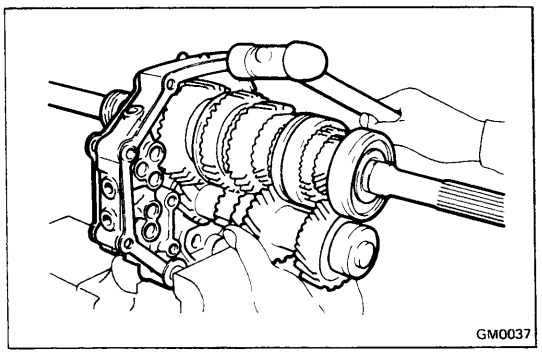

24. REMOVE OUTPUT SHAFT, COUNTER GEAR AND INPUT SHAFT AS A UNIT FROM INTERMEDIATE PLATE

(a) Remove the output shaft, counter gear and input shaft as a unit from the intermediate plate by pulling on the counter gear and tapping on the intermediate plate with a plastic hammer.

(b) Remove the input shaft with the 14-needle roller bearings from the output shaft.

25. REMOVE COUNTER REAR BEARING FROM INTERMEDIATE PLATE

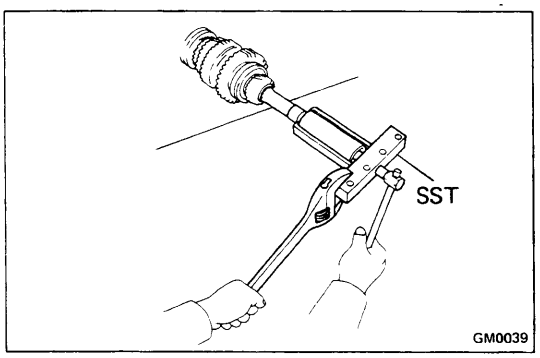

26. REMOVE SLEEVE FROM OUTPUT SHAFT

Using SST, remove the sleeve from the output shaft.

SST 09950-20015

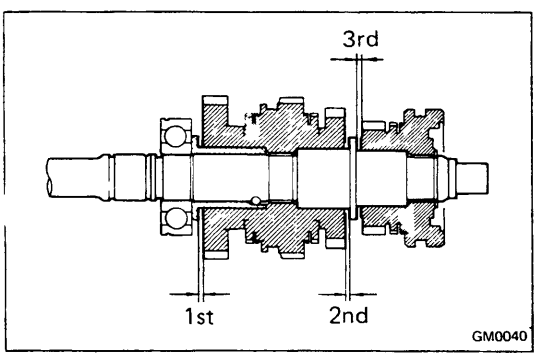

27. MEASURE EACH GEAR THRUST CLEARANCE

Measure the thrust clearance of each gear.

Standard clearance: **0.10 — 0.25 mm (0.0039 — 0.0098 in.)**

Maximum clearance: **0.25 mm (0.0098 in.)**

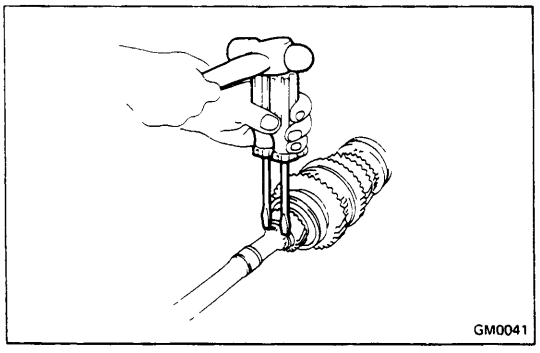

28. REMOVE FIFTH GEAR, REAR BEARING AND FIRST GEAR ASSEMBLY

(a) Using two screwdrivers and a hammer, tap out snap ring.

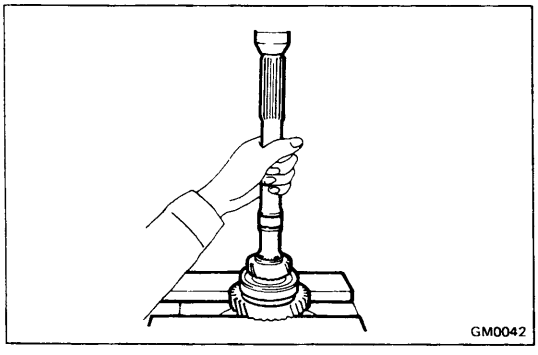

(b) Using a press, remove the 5th gear, rear bearing, 1st gear and inner race.

(c) Remove the needle roller bearing.

(d) Remove the synchronizer ring.

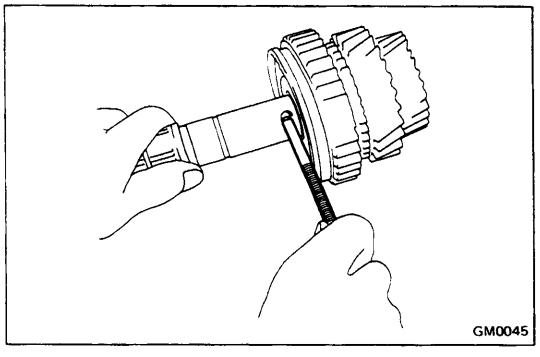

29. REMOVE LOCKING BALL

Using a magnetic finger, remove the locking ball.

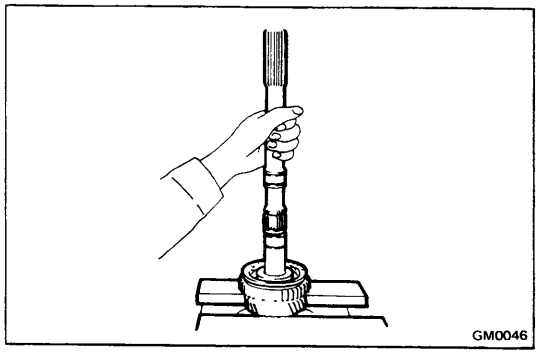

30. REMOVE HUB SLEEVE NO.1 ASSEMBLY AND SECOND GEAR ASSEMBLY

(a) Using a press, remove hub sleeve No.1, the synchronizer ring and 2nd gear.

(b) Remove the needle roller bearing.

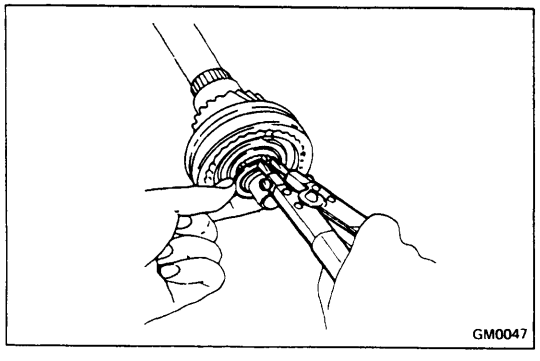

31. REMOVE HUB SLEEVE NO.2 ASSEMBLY AND THIRD GEAR ASSEMBLY

(a) Using snap ring pliers, remove the snap ring.

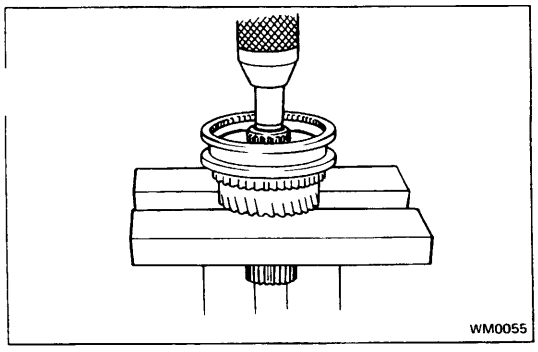

(b) Using a press, remove hub sleeve No.2, the synchronizer ring and 3rd gear.

(c) Remove the needle roller bearing.

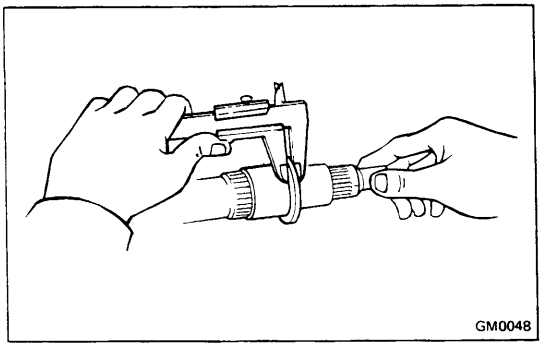
GM0048

INSPECTION OF TRANSMISSION COMPONENTS

1. INSPECT OUTPUT SHAFT AND INNER RACE

(a) Using calipers, measure the output shaft flange thickness.

Minimum thickness: 4.80 mm (0.1890 in.)

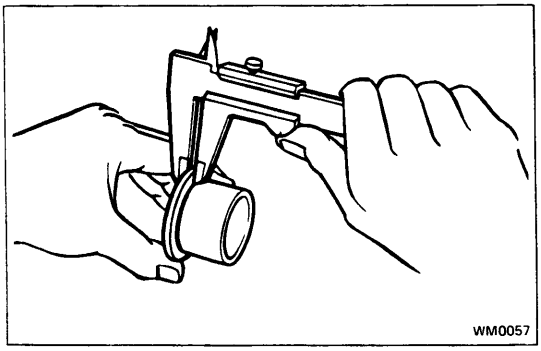
WM0057

(b) Using calipers, measure the inner race flange thickness.

Minimum thickness: 3.99 mm (0.1571 in.)

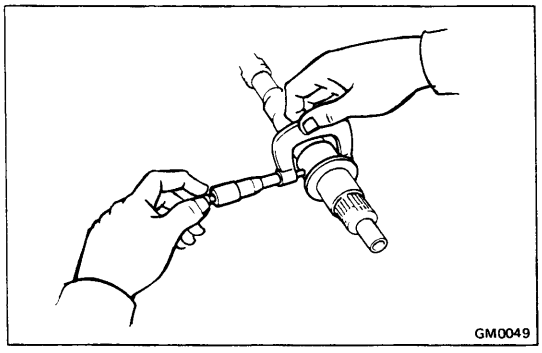
GM0049

(c) Using a micrometer, measure the outer diameter of the output shaft journal.

Minimum diameter:

2nd gear	**37.984 mm (1.4954 in.)**
3rd gear	**34.984 mm (1.3773 in.)**

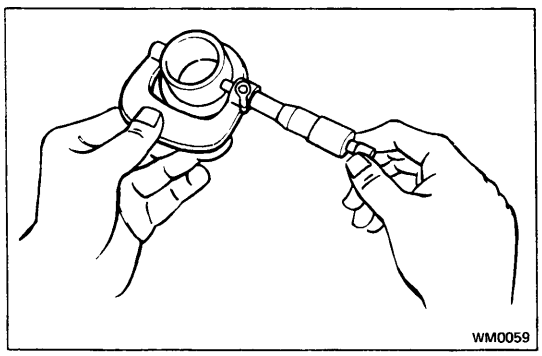
WM0059

(d) Using a micrometer, measure the outer diameter of the inner race.

Minimum diameter: 38.985 mm (1.5348 in.)

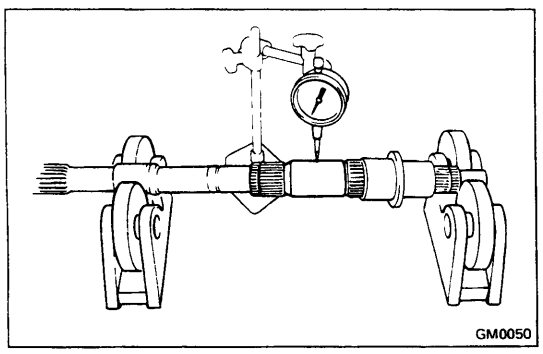
GM0050

(e) Using a dial indicator, check the shaft runout.

Maximum runout: 0.05 mm (0.0020 in.)

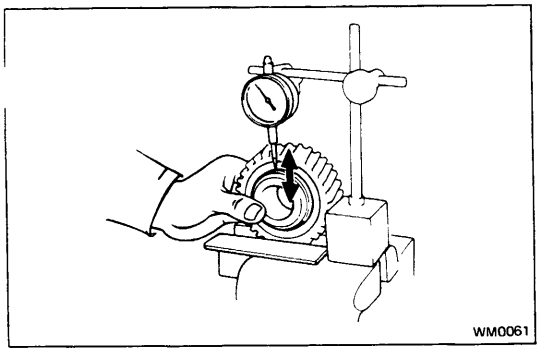

2. CHECK OIL CLEARANCE OF FIRST GEAR

Using a dial indicator, measure the oil clearance between the gear and inner race with the needle roller bearing installed.

Standard clearance:	**0.009 — 0.032 mm (0.0004 — 0.0013 in.)**
Maximum clearance:	**0.15 mm (0.0059 in.)**

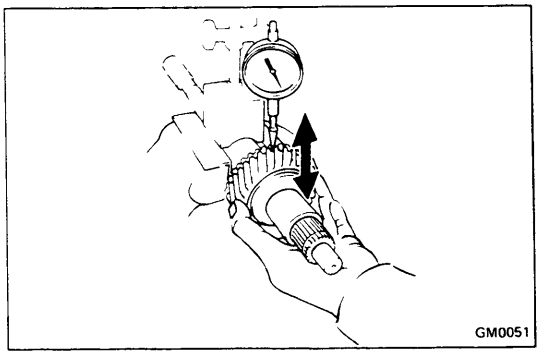

3. CHECK OIL CLEARANCE OF SECOND, THIRD AND COUNTER FIFTH GEARS

Using a dial indicator, measure the oil clearance between the gear and shaft with the needle roller bearing installed.

Standard clearance:

2nd and 3rd gears	**0.009 — 0.033 mm (0.0004 — 0.0013 in.)**
Counter 5th gear	**0.009 — 0.032 mm (0.0004 — 0.0013 in.)**
Maximum clearance:	**0.15 mm (0.0059 in.)**

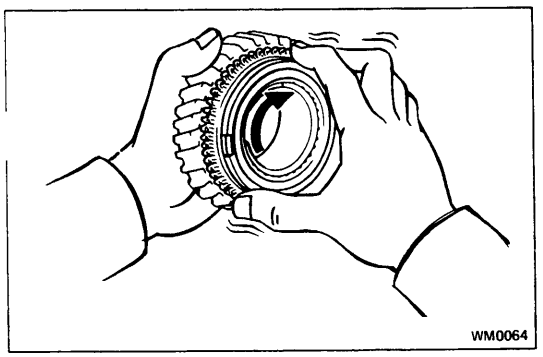

4. INSPECT SYNCHRONIZER RINGS

(a) Turn the ring and push it in to check the braking action.

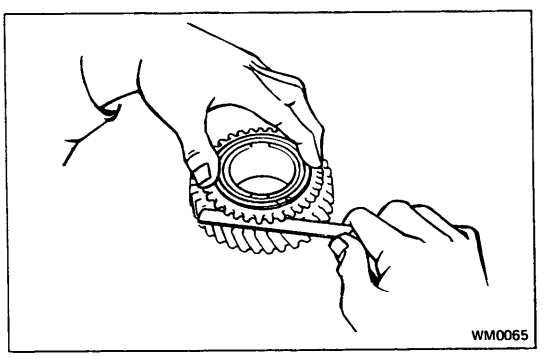

(b) Measure the clearance between the synchronizer ring back and the gear spline end.

Standard clearance:	**1.0 — 2.0 mm (0.039 — 0.079 in.)**
Minimum clearance:	**0.8 mm (0.031 in.)**

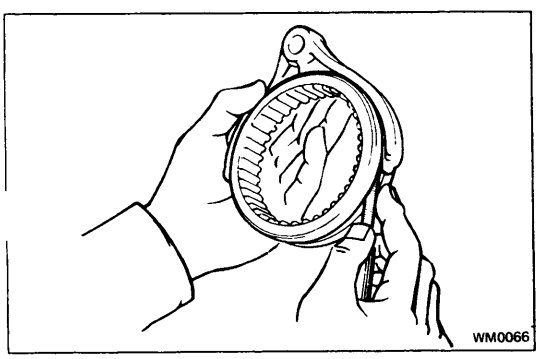

5. MEASURE CLEARANCE OF SHIFT FORKS AND HUB SLEEVES

Using a feeler gauge, measure the clearance between the hub sleeve and shift fork.

Maximum clearance: **1.0 mm (0.039 in.)**

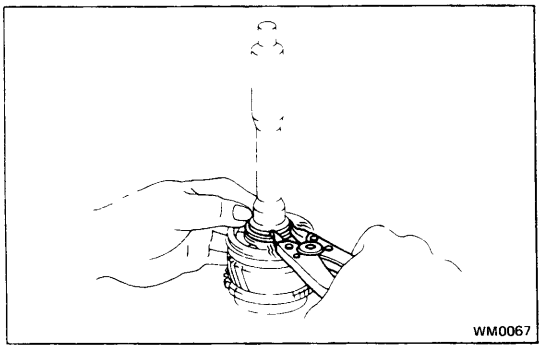
WM0067

6. IF NECESSARY, REPLACE INPUT SHAFT BEARING

(a) Using snap ring pliers, remove the snap ring.

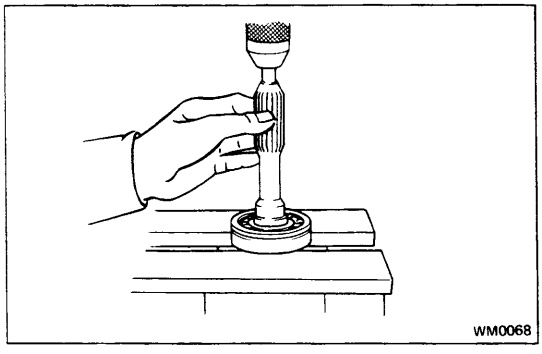
WM0068

(b) Using a press, remove the bearing.

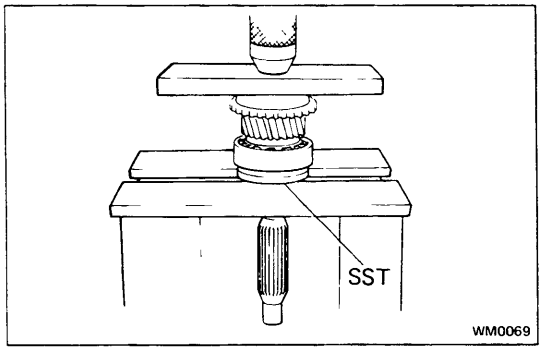

WM0069

(c) Using a press and SST, install a new bearing.

SST 09506-35010

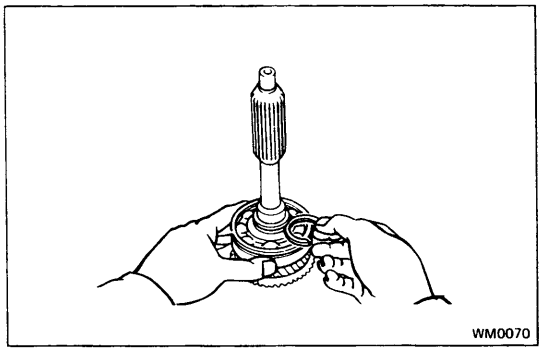
WM0070

(d) Select a snap ring that will allow minimum axial play and install it on the shaft.

Mark	Thickness	mm (in.)
0	2.05 — 2.10	(0.0807 — 0.0827)
1	2.10 — 2.15	(0.0827 — 0.0846)
2	2.15 — 2.20	(0.0846 — 0.0866)
3	2.20 — 2.25	(0.0866 — 0.0886)
4	2.25 — 2.30	(0.0886 — 0.0906)
5	2.30 — 2.35	(0.0906 — 0.0925)

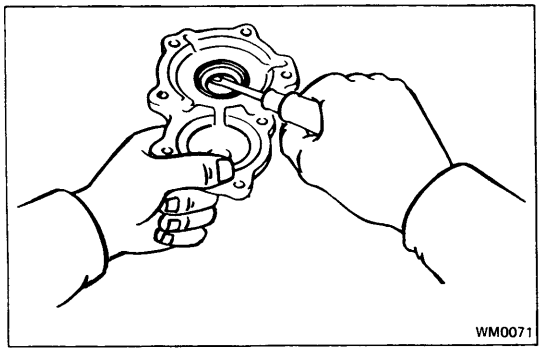
WM0071

7. INSPECT FRONT BEARING RETAINER

Check the retainer and oil seal for wear or damage. If the oil seal is worn or damaged, replace it as follows.

(a) Using a screwdriver, pry out the oil seal.

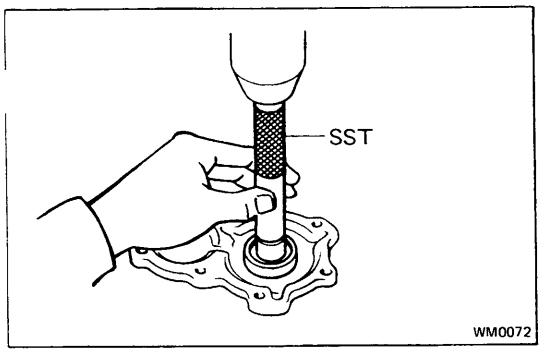

(b) Using SST, press in the oil seal.

SST 09223-50010

Oil seal depth: 11.2 – 12.2 mm (0.441 – 0.480 in.)
Transmission case installation surface

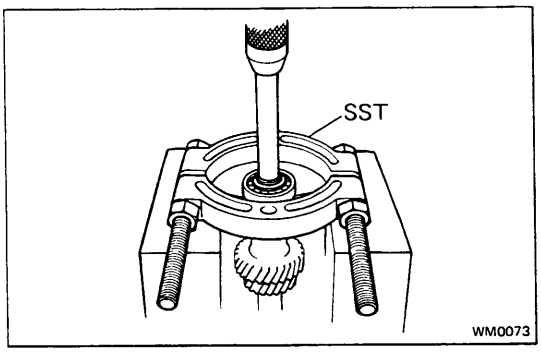

8. IF NECESSARY, REPLACE COUNTER GEAR FRONT BEARING

(a) Using snap ring pliers, remove the snap ring.

(b) Using SST, press out the bearing.

SST 09950-00020

(c) Replace the side race.

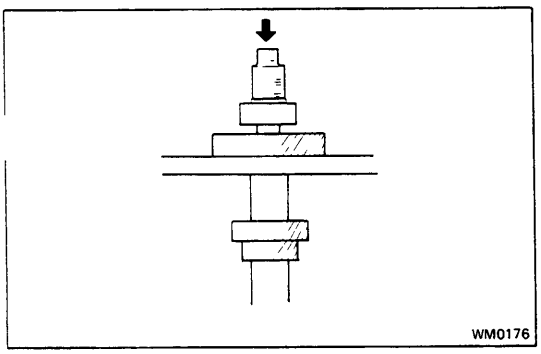

(d) Using a socket wrench, press in the bearing, side race and inner race.

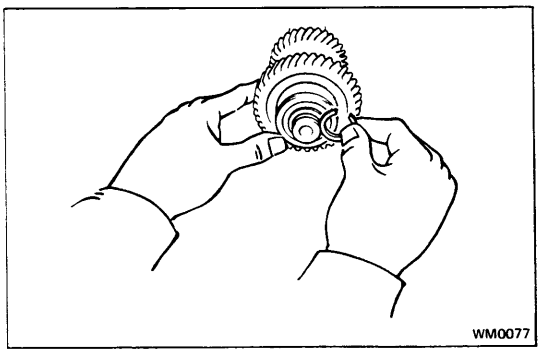

(e) Select a snap ring that will allow minimum axial play and install it on the shaft.

Mark	Thickness	mm (in.)
1	2.05 – 2.10	(0.0807 – 0.0827)
2	2.10 – 2.15	(0.0827 – 0.0846)
3	2.15 – 2.20	(0.0846 – 0.0866)
4	2.20 – 2.25	(0.0866 – 0.0886)
5	2.25 – 2.30	(0.0886 – 0.0906)
6	2.30 – 2.35	(0.0906 – 0.0925)

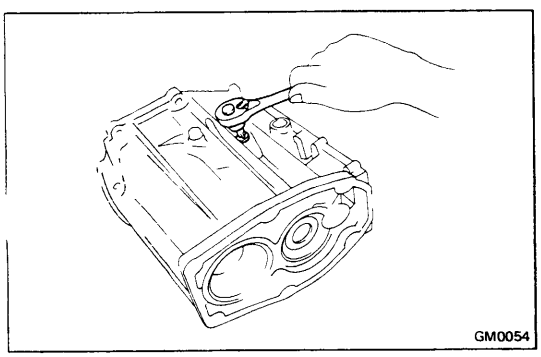

9. IF NECESSARY, REPLACE REVERSE RESTRICT PIN

(a) Using a torx socket wrench, remove the screw plug.

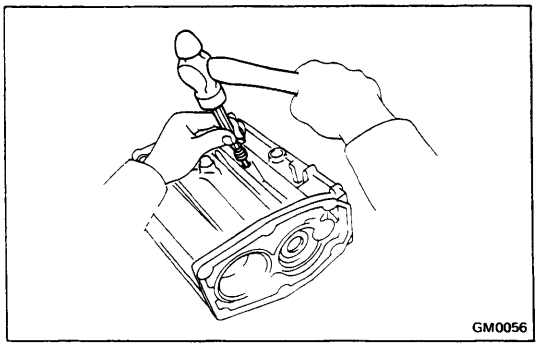

(b) Using a pin punch and hammer, drive out the slotted spring pin.

(c) Pull off the lever housing and slide out the shaft.

(d) Install the lever housing.

(e) Using a pin punch and hammer, drive in the slotted spring pin.

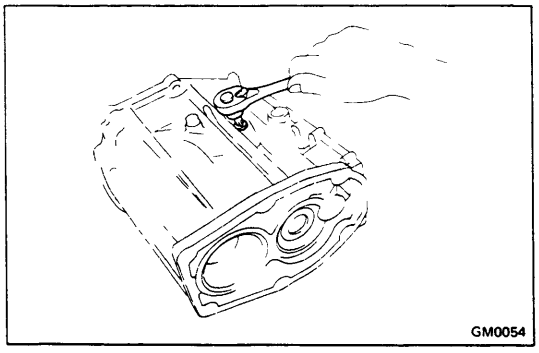

(f) Using a torx socket wrench, install and torque the screw plug.

Torque: 190 kg-cm (14 ft-lb, 19 N·m)

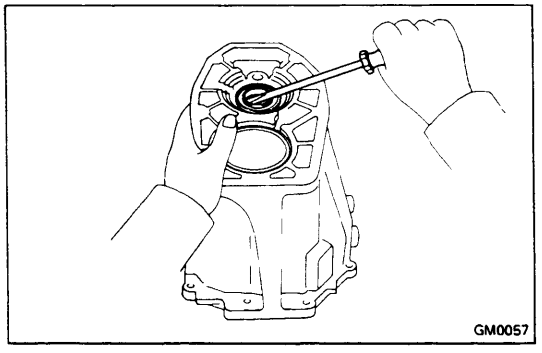

11. IF NECESSARY, REPLACE OIL SEAL

(a) Using a screwdriver, pry out the oil seal.

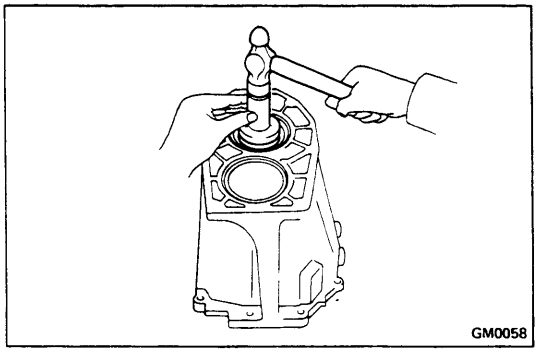

(b) Using SST, drive in a new oil seal.

SST 09325-12010

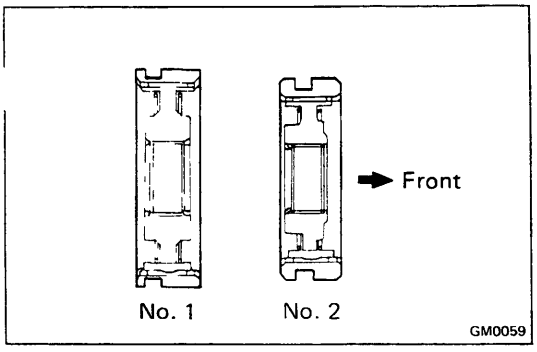

ASSEMBLY OF TRANSMISSION

(See pages MT-39, 40)

1. INSERT CLUTCH HUB NO.1 AND NO.2 INTO HUB SLEEVE

(a) Install the clutch hub and shifting keys to the hub sleeve.

(b) Install the shifting key springs under the shifting keys.

CAUTION: Install the key springs positioned so that their end gaps are not in line.

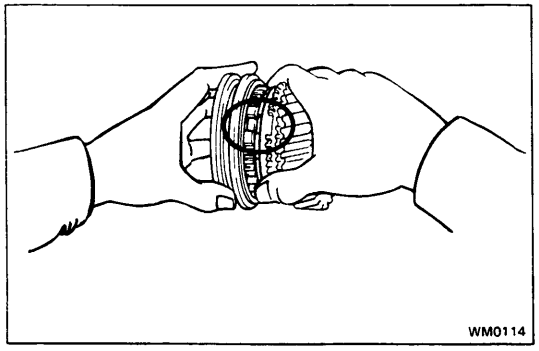

2. INSTALL THIRD GEAR AND HUB SLEEVE NO.2 ON OUTPUT SHAFT

(a) Apply gear oil to the shaft and needle roller bearing.

(b) Place the synchronizer ring on the gear and align the ring slots with the shifting keys.

(c) Install the needle roller bearing in the 3rd gear.

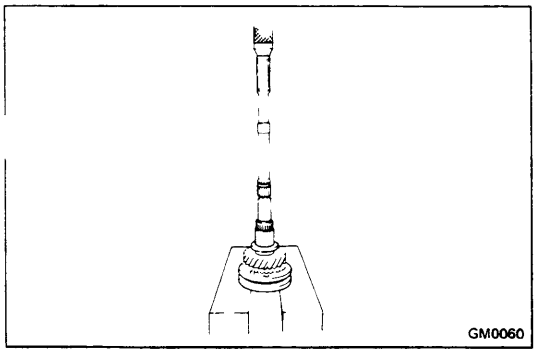

(d) Using a press, install the 3rd gear and hub sleeve No.2.

3. INSTALL SNAP RING

(a) Select a snap ring that will allow minimum axial play.

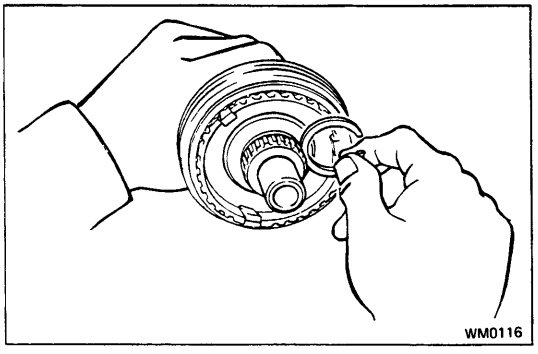

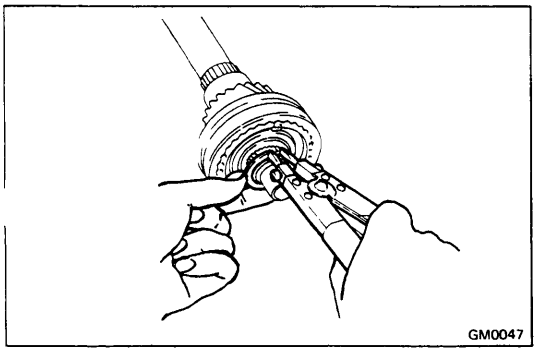

(b) Using snap ring pliers, install the snap ring.

Mark			
	C-1	1.75 — 1.80 mm	(0.0689 — 0.0709 in.)
	D	1.80 — 1.85 mm	(0.0709 — 0.0728 in.)
	D-1	1.85 — 1.90 mm	(0.0728 — 0.0748 in.)
	E	1.90 — 1.95 mm	(0.0748 — 0.0768 in.)
	E-1	1.95 — 2.00 mm	(0.0768 — 0.0787 in.)
	F	2.00 — 2.05 mm	(0.0787 — 0.0807 in.)
	F-1	2.05 — 2.10 mm	(0.0807 — 0.0827 in.)

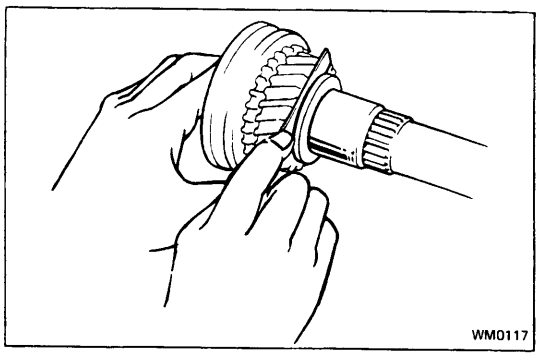

4. MEASURE THIRD GEAR THRUST CLEARANCE

Using a feeler gauge, measure the 3rd gear thrust clearance.

Standard clearance: **0.10 — 0.25 mm (0.0039 — 0.0098 in.)**
Maximum clearance: **0.25 mm (0.0098 in.)**

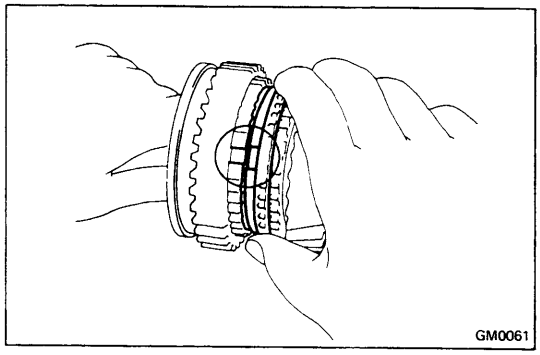

5. INSTALL SECOND GEAR AND HUB SLEEVE NO.1

(a) Apply gear oil to the shaft and needle roller bearing.

(b) Place the synchronizer ring on the gear and align the ring slots with the shifting keys.

(c) Install the needle roller bearing in the 2nd gear.

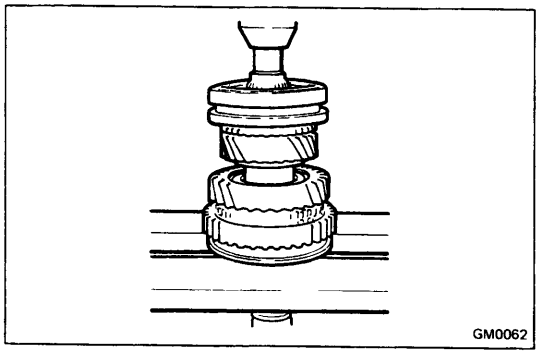

(d) Using a press, install the 2nd gear and hub sleeve No.1.

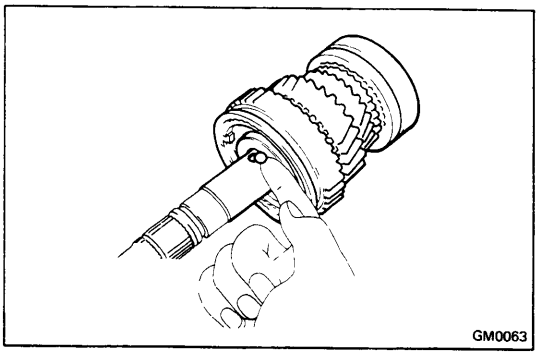

6. INSTALL LOCKING BALL AND FIRST GEAR ASSEMBLY

(a) Install the locking ball in the shaft.

(b) Apply gear oil to the needle roller bearing.

(c) Assemble the 1st gear, synchronizer ring, needle roller bearing and bearing inner race.

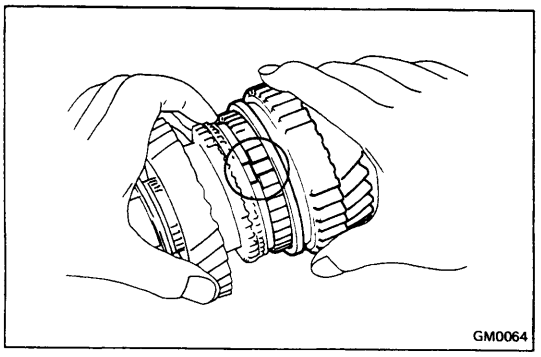

(d) Install the assembly on the output shaft with the synchronizer ring slots aligned with the shifting keys.

(e) Turn the inner race to align it with the locking ball.

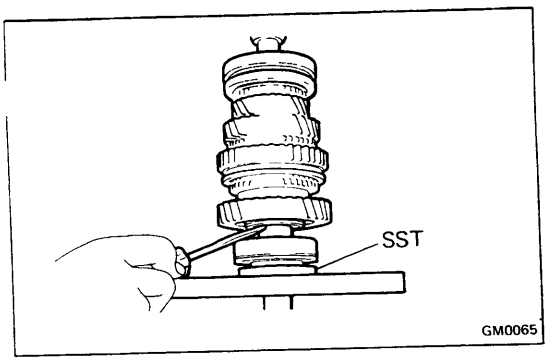

7. INSTALL OUTPUT SHAFT REAR BEARING

Using SST and a press, install the bearing on the output shaft with the outer race snap ring groove toward the rear.

NOTE: Hold the 1st gear inner race to prevent it from falling.

SST 09506-35010

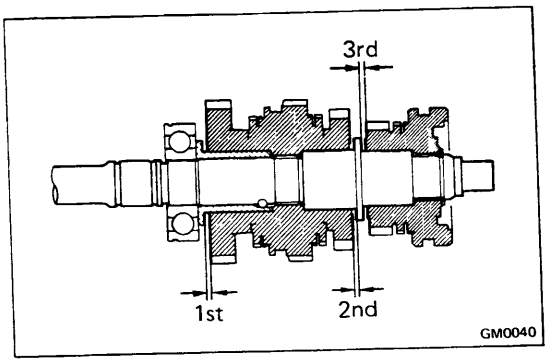

8. MEASURE FIRST AND SECOND GEAR THRUST CLEARANCE

Using a feeler gauge, measure the 1st and 2nd gear thrust clearance.

Standard clearance: **0.10 — 0.25 mm (0.0039 — 0.0098 in.)**

Maximum clearance: **0.25 mm (0.0098 in.)**

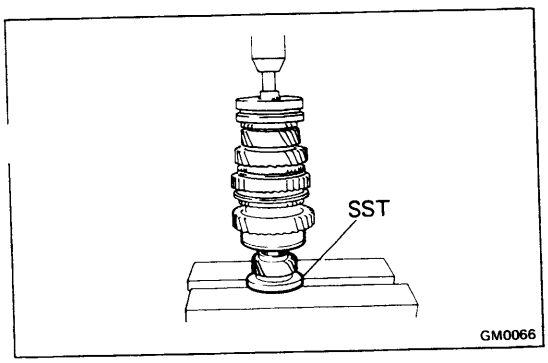

9. INSTALL FIFTH GEAR

Using SST and a press, install the 5th gear.

SST 09506-35010

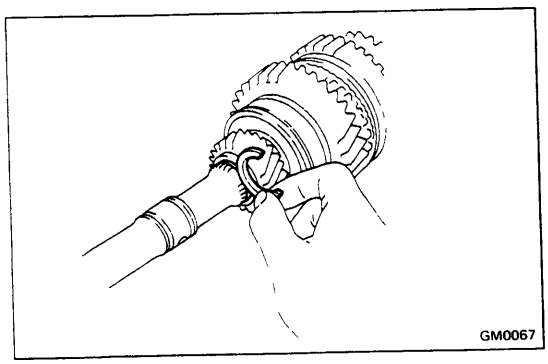

10. INSTALL SNAP RING

(a) Select a snap ring that will allow minimum axial play.

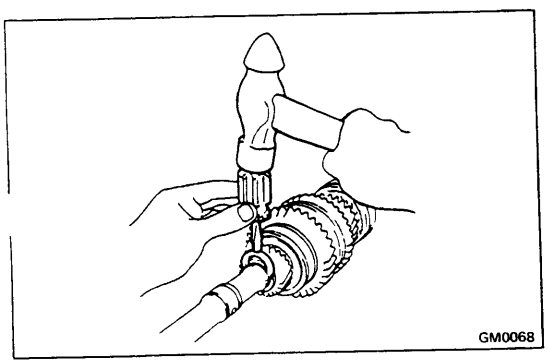

(b) Using snap ring pliers, install the snap ring.

Mark	Tickness mm (in.)	Mark	Thickness mm (in.)
A	2 67 — 2 72 (0.1051 — 0.1071)	G	3.03 — 3.08 (0.1193 — 0.1213)
B	2.73 — 2.78 (0.1075 — 0.1094)	H	3.09 — 3.14 (0.1217 — 0.1236)
C	2.79 — 2.84 (0.1098 — 0.1118)	J	3.15 — 3.20 (0.1240 — 0.1260)
D	2.85 — 2.90 (0.1122 — 0.1142)	K	3.21 — 3.26 (0.1264 — 0.1283)
E	2.91 — 2.96 (0.1146 — 0.1165)	L	3.27 — 3.32 (0.1287 — 0.1307)
F	2.97 — 3 02 (0.1169 — 0 1189)		

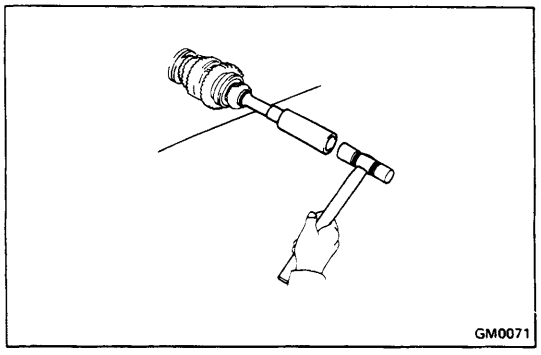
GM0071

11. INSTALL SLEEVE TO OUTPUT SHAFT

Using a plastic hammer, tap the sleeve onto the output shaft.

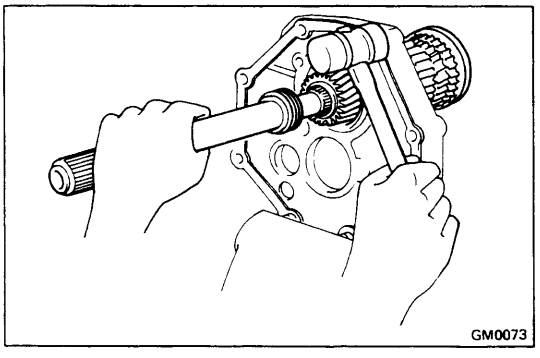
GM0073

12. INSTALL OUTPUT SHAFT TO INTERMEDIATE PLATE

Install the output shaft into the intermediate plate by pulling on the output shaft and tapping on the intermediate plate.

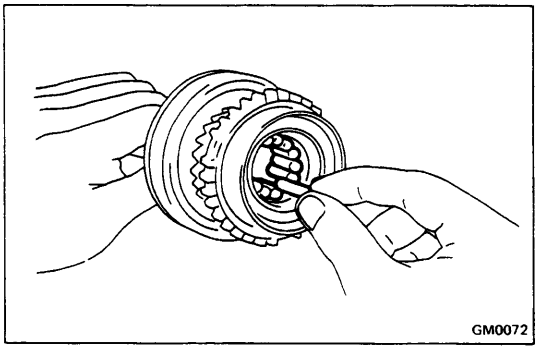
GM0072

13. INSTALL INPUT SHAFT

(a) Apply MP grease to the 14-needle roller bearing and install it into the input shaft.

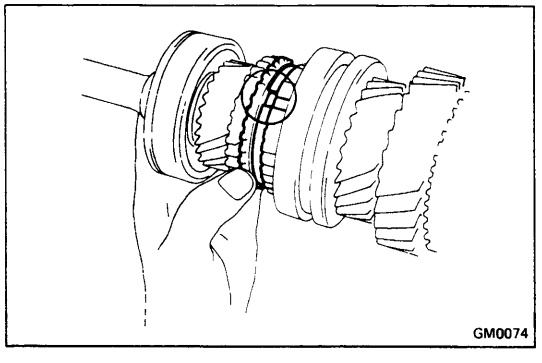
GM0074

(b) Install the input shaft to the output shaft with the synchronizer ring slots aligned with the shifting keys.

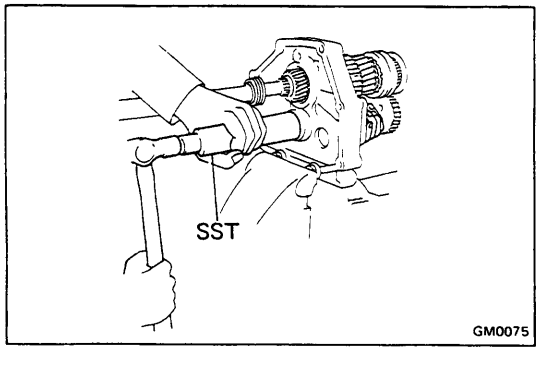

GM0075

14. INSTALL COUNTER GEAR

Install the counter gear into the intermediate plate while holding the counter gear, and install the counter rear bearing with SST.

SST 09316-60010

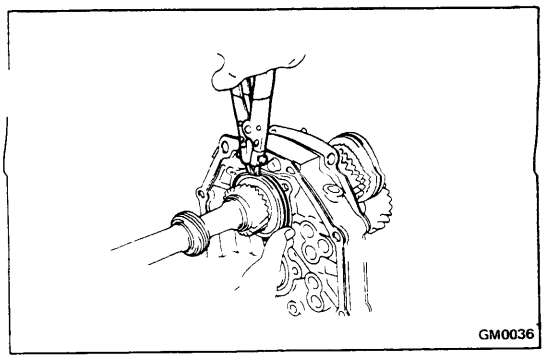

15. INSTALL BEARING SNAP RING

Using snap ring pliers, install the snap ring.

NOTE: Be sure the snap ring is flush with the intermediate plate surface.

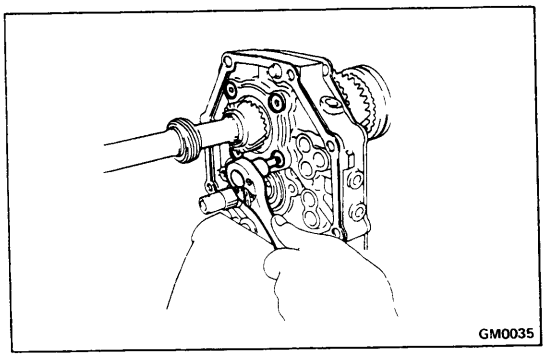

16. INSTALL REAR BEARING RETAINER

Using a torx socket wrench, install and torque the screws.

Torque: 185 kg-cm (13 ft-lb, 18 N·m)

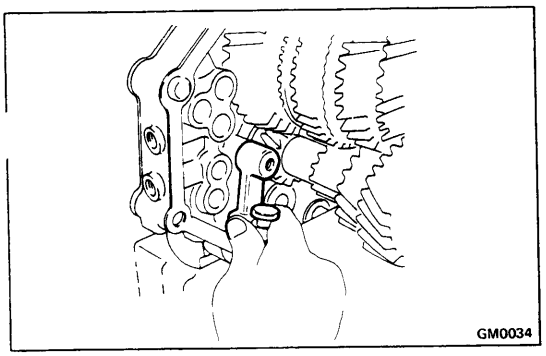

17. INSTALL REVERSE SHIFT ARM BRACKET

Install the reverse shift arm bracket and torque the bolts.

Torque: 185 kg-cm (13 ft-lb, 18 N·m)

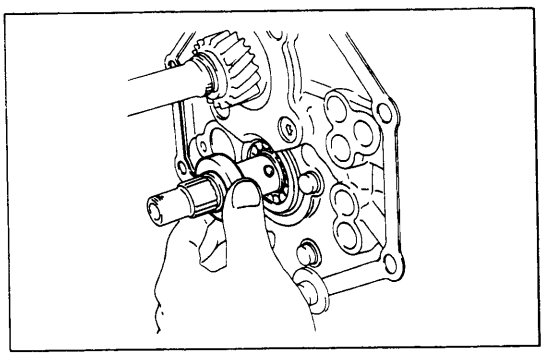

18. INSTALL BALL AND SPACER

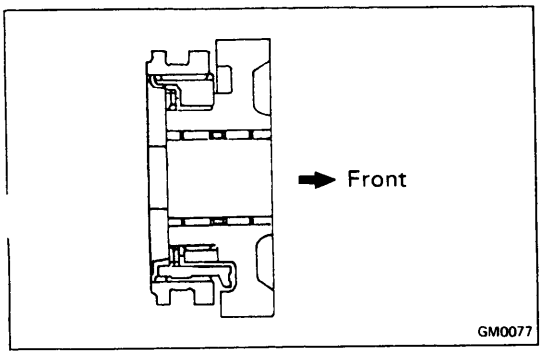

19. INSERT COUNTER FIFTH GEAR INTO HUB SLEEVE NO.3

(a) Install the shifting keys and hub sleeve No.3 onto the counter 5th gear.

(b) Install the shifting key springs under the shifting keys.

CAUTION: Install the key springs positioned so that their end gaps are not in line.

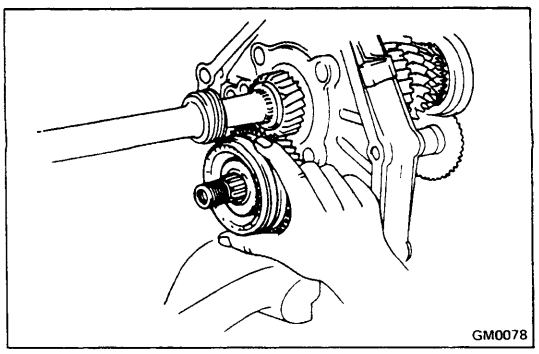

20. INSTALL COUNTER FIFTH GEAR WITH HUB SLEEVE NO.3 ASSEMBLY AND NEEDLE ROLLER BEARINGS

(a) Apply gear oil to the needle roller bearings.

(b) Install the counter 5th gear with hub sleeve No.3 and needle roller bearings.

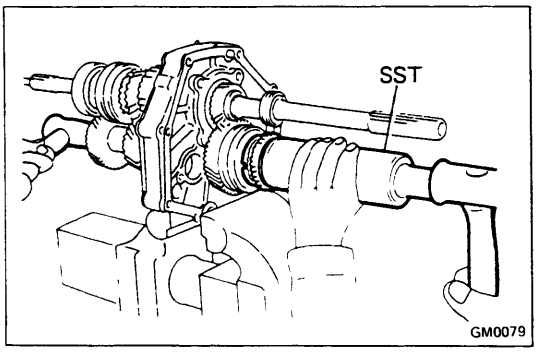

21. INSTALL SYNCHRONIZER RING AND GEAR SPLINE PIECE NO.5

(a) Install the synchronizer ring on gear spline piece No.5.

(b) Using SST, drive in gear spline piece No.5 with the synchronizer ring slots aligned with the shifting keys.

SST 09316-60010

NOTE: When installing gear spline piece No.5, support the counter gear in front with a 3-5 lb hammer or equivalent.

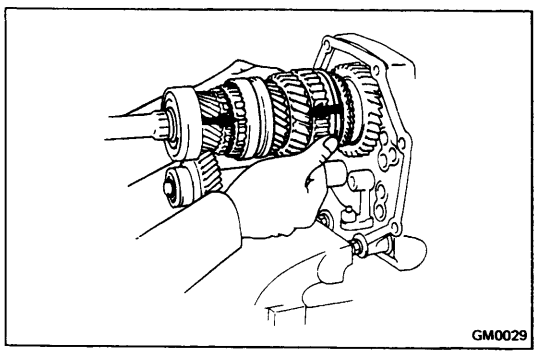

22. INSTALL LOCK NUT

(a) Engage the gear double meshing.

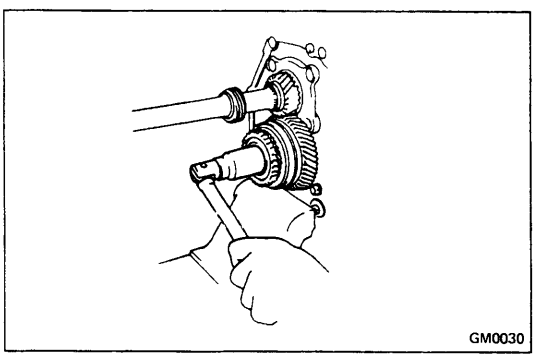

(b) Install and torque the lock nut.

Torque: 1,200 kg-cm (87 ft-lb, 118 N·m)

(c) Stake the lock nut.

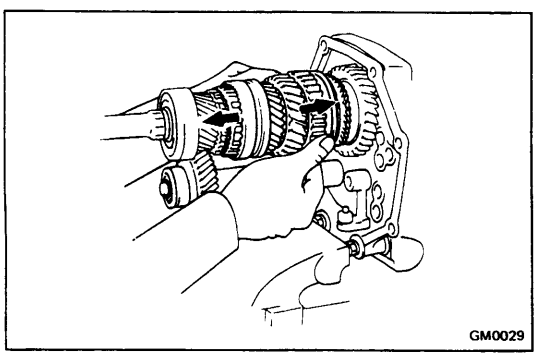

(d) Disengage the gear double meshing.

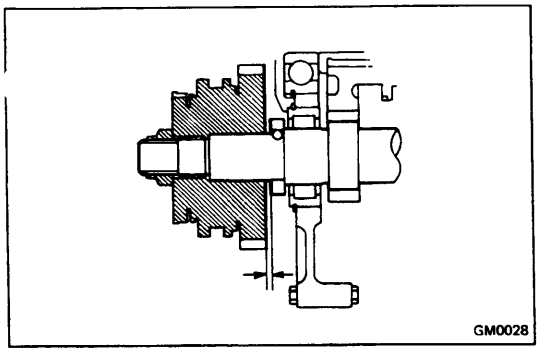

23. MEASURE COUNTER FIFTH GEAR THRUST CLEARANCE

Using a feeler gauge, measure the counter 5th gear thrust clearance.

Standard clearance: **0.10 – 0.30 mm (0.0039 – 0.0118 in.)**
Maximum clearance: **0.30 mm (0.0118 in.)**

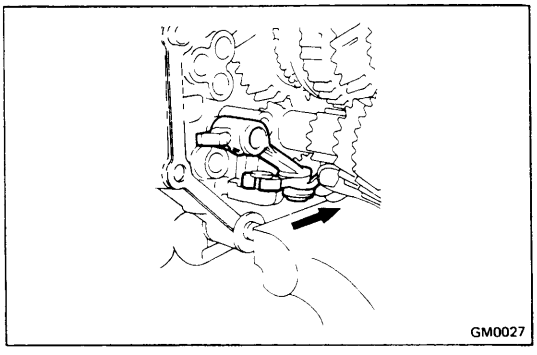

24. INSTALL REVERSE SHIFT ARM TO REVERSE SHIFT ARM BRACKET

Install the reverse shift arm to the pivot of the reverse shift arm bracket.

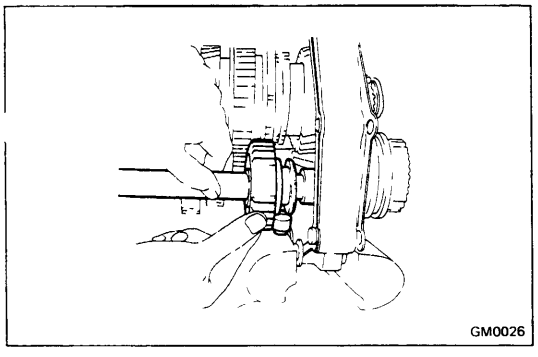

25. INSTALL REVERSE IDLER GEAR AND SHAFT

(a) Install the reverse idler gear on the shaft.

(b) Align the reverse shift arm shoe to the reverse idler gear groove and insert the reverse idler gear shaft to the intermediate plate.

(c) Install the reverse idler gear shaft stopper and torque the bolt.

Torque: 175 kg-cm (13 ft-lb, 17 N·m)

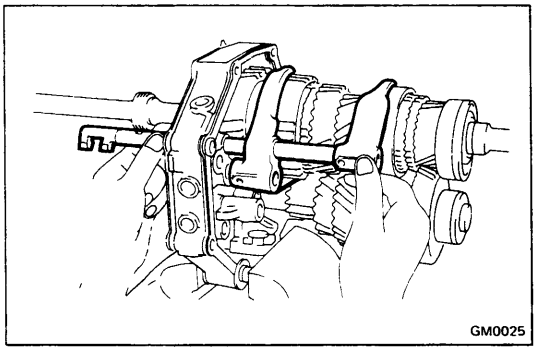

26. INSTALL SHIFT FORK SHAFT NO.2, SHIFT FORK NO.1 AND NO.2

Place shift forks No.1 and No.2 into the groove of hub sleeves No.1 and No.2 and install fork shaft No.2 to shift forks No.1 and No.2 through the intermediate plate.

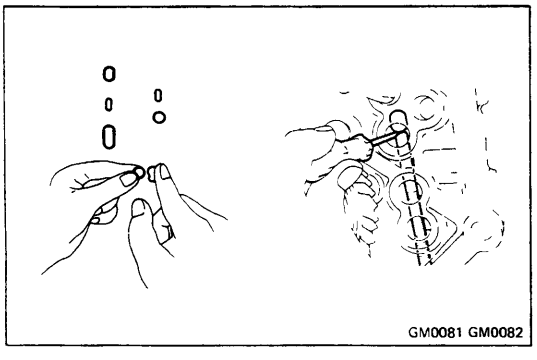

27. INSTALL INTERLOCK PIN

(a) Apply MP grease to the interlock pins.

(b) Using a magnetic finger and screwdriver, install the interlock pin into the intermediate plate.

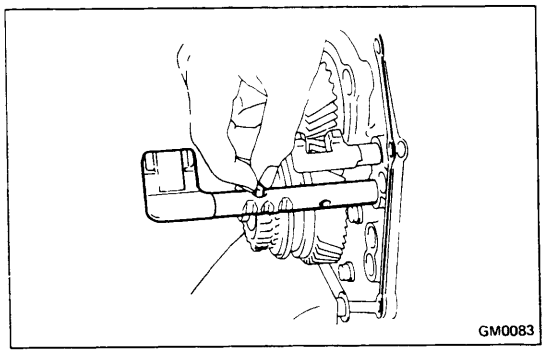

28. INSTALL SHIFT FORK SHAFT NO.1

(a) Install the interlock pin into the shaft hole.

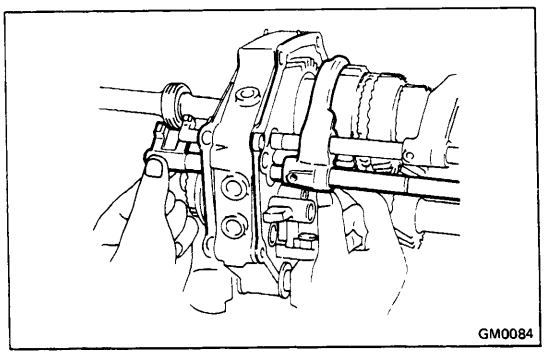

(b) Install fork shaft No.1 to shift fork No.1 through the intermediate plate.

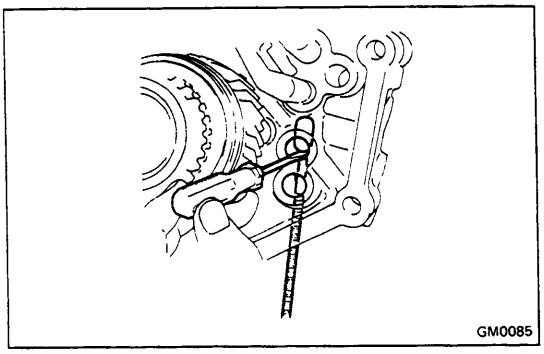

29. INSTALL INTERLOCK PIN

Using a magnetic finger and screwdriver, install the interlock pin into the intermediate plate.

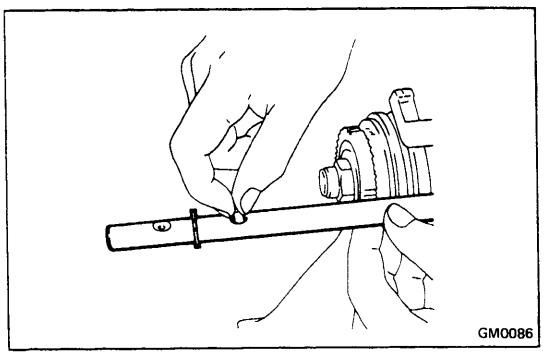

30. INSTALL SHIFT FORK SHAFT NO.3

(a) Install the interlock pin into the shaft head.

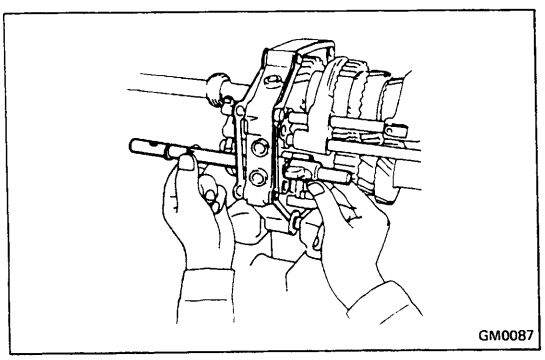

(b) Install fork shaft No.3 to the reverse shift arm through the intermediate plate.

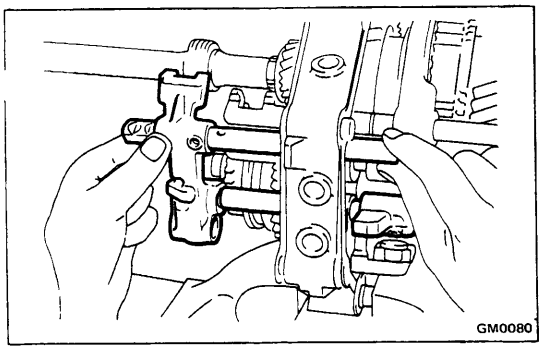

31. INSTALL SHIFT FORK SHAFT NO.5 AND REVERSE SHIFT HEAD

(a) Install the reverse shift head into fork shaft No.5.

(b) Insert fork shaft No.5 to the intermediate plate and put in the reverse shift head to shift fork shaft No.3.

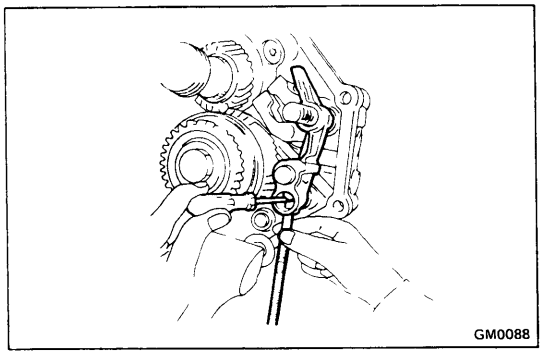

32. INSTALL SHIFT FORK SHAFT NO.4, SHIFT FORK NO.3 AND TWO LOCKING BALLS

(a) Using a magnetic finger and screwdriver, install the locking ball into the reverse shift head hole.

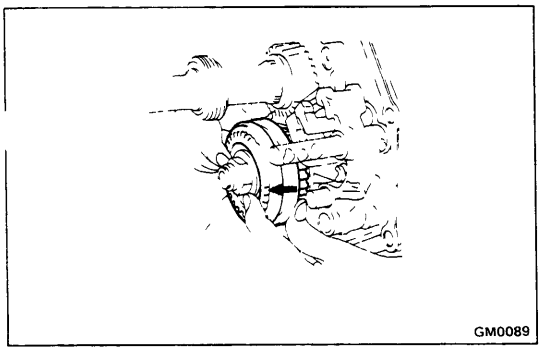

(b) Shift hub sleeve No.3 to the 5th speed position.

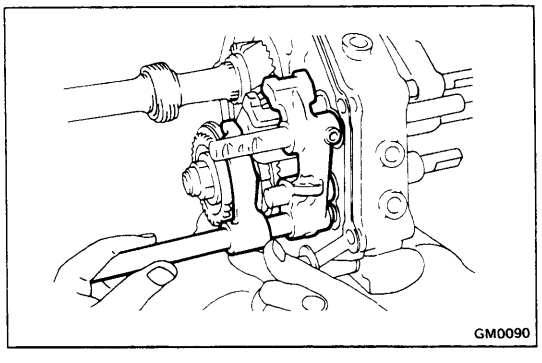

(c) Place shift fork No.3 into the groove of hub sleeve No.3 and install fork shaft No.4 to shift fork No.4 and reverse shift arm.

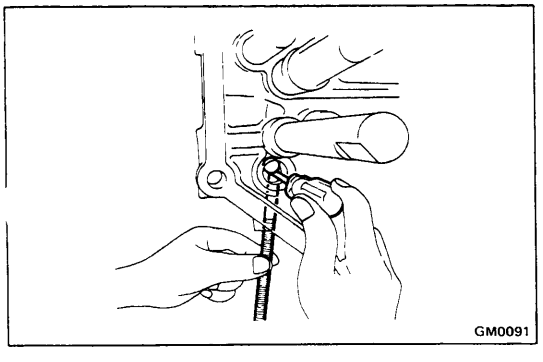

(d) Using a magnetic finger and screwdriver, install the locking ball into the intermediate plate and insert fork shaft No.4 to the intermediate plate.

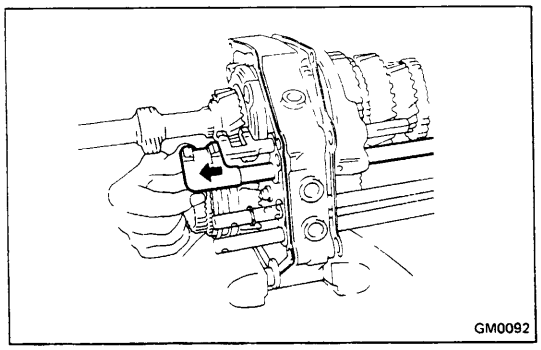

33. CHECK INTERLOCK

(a) Shift fork shaft No.1 to the 1st speed position.

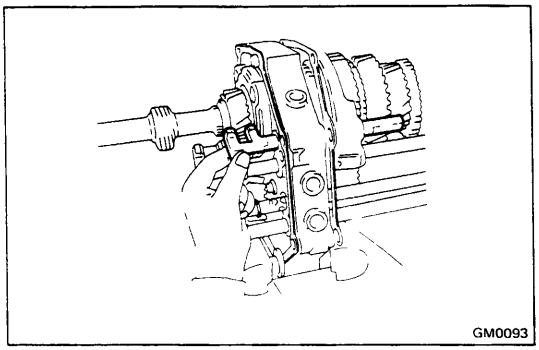

(b) Fork shafts No.2, No.3, No.4 and No.5 should not move.

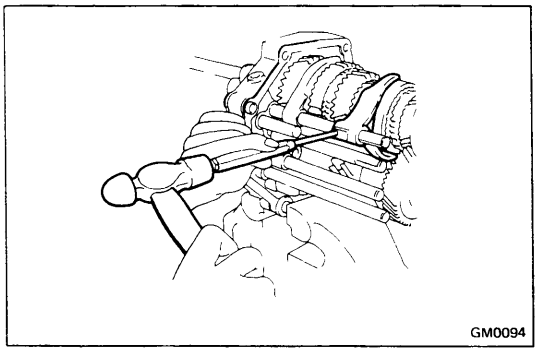

34. INSTALL FIVE SLOTTED SPRING PINS

Using a pin punch and hammer, drive the slotted spring pins into each shift fork, reverse shift arm and reverse shift head.

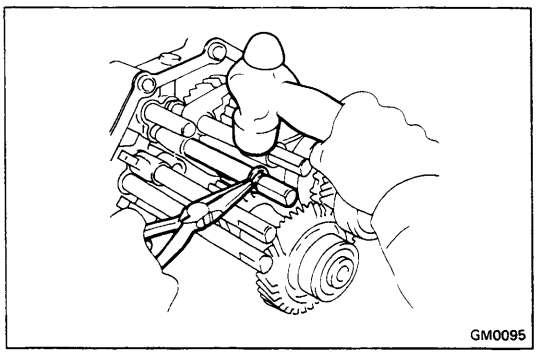

35. INSTALL TWO FORK SHAFT E-RING

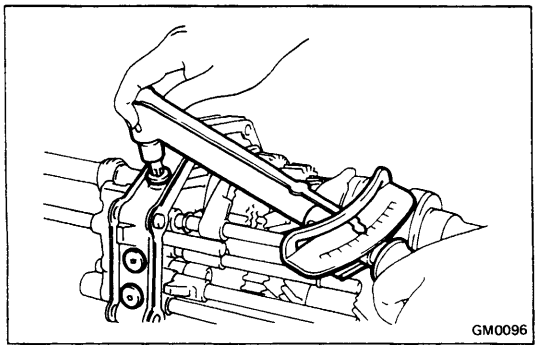

36. INSTALL LOCKING BALLS, SPRINGS AND SCREW PLUGS

(a) Apply liquid sealer to the plugs.

(b) Install the locking balls, springs and screw plugs and torque the screw plugs with a torx socket wrench.

Torque: 190 kg-cm (14 ft-lb, 19 N·m)

NOTE: (5-Speed) Install the short spring into the bott of the intermediate plate.

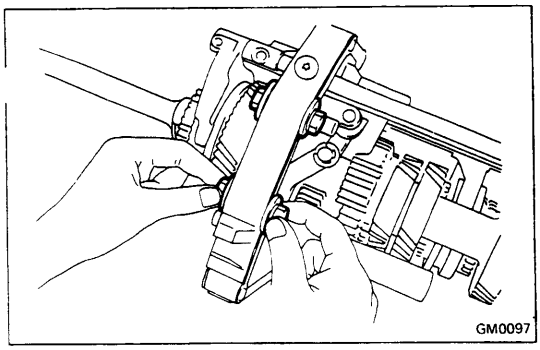

37. DISMOUNT INTERMEDIATE PLATE FROM VISE

(a) Dismount the intermediate plate from the vise.

(b) Remove the bolts, nuts, plate washers and gasket.

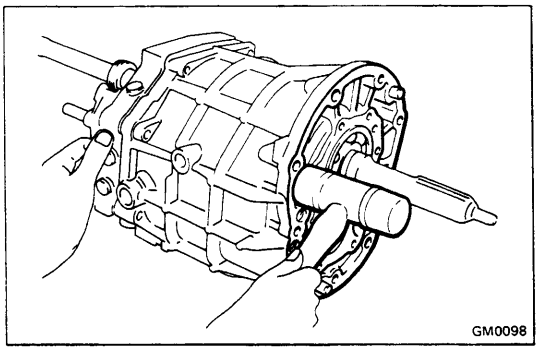

38. INSTALL TRANSMISSION CASE WITH NEW GASKET TO INTERMEDIATE PLATE

Align each bearing outer race, each fork shaft end and reverse idler gear shaft end with the case installation holes, and install the case.

If necessary, tap on the case with a plastic hammer.

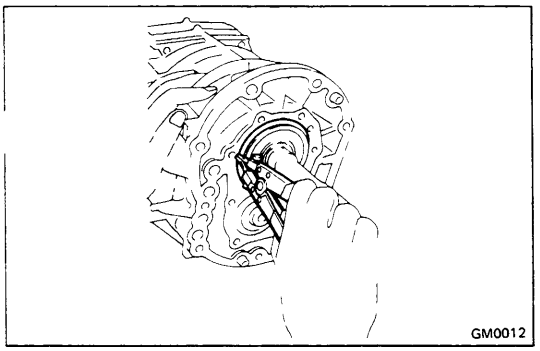

39. INSTALL TWO BEARING SNAP RINGS

40. INSTALL FRONT BEARING RETAINER WITH NEW GASKET

(a) Install the bearing retainer with a new gasket.

(b) Apply liquid sealer to the bolts.

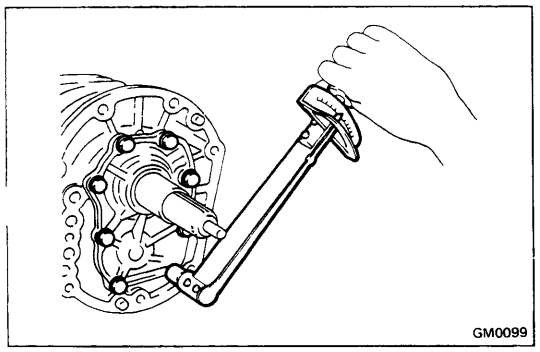

(c) Install and torque the bolts.

Torque: 170 kg-cm (12 ft-lb, 17 N·m)

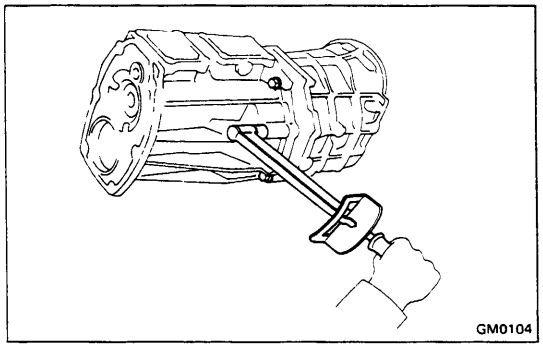
GM0104

41 INSTALL TRANSFER ADAPTER, NEW GASKET, SHIFT LEVER SHAFT AND SHIFT LEVER HOUSING

(a) Install a new gasket to the intermediate plate.

(b) Install and torque the transfer adapter with the eight bolts.

Torque: 380 kg-cm (27 ft-lb, 37 N·m)

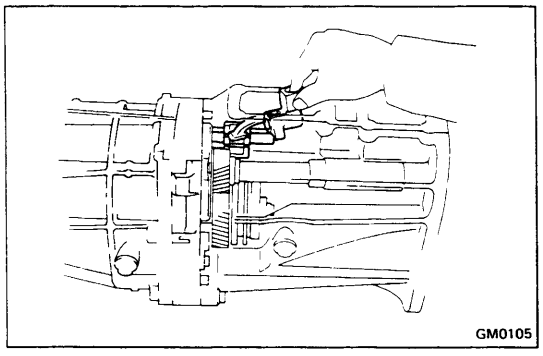
GM0105

(c) Insert the shift lever housing to the transfer adapter and connect the fork shafts.

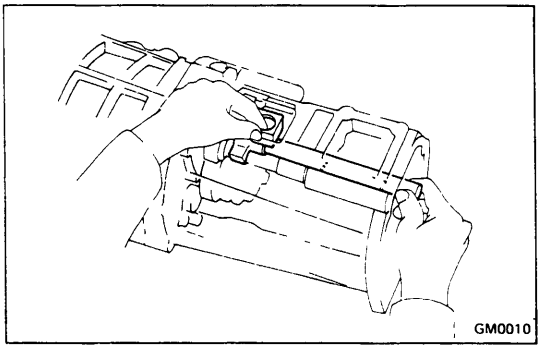
GM0010

(d) Insert the shift lever shaft to the transfer adapter and shift lever housing.

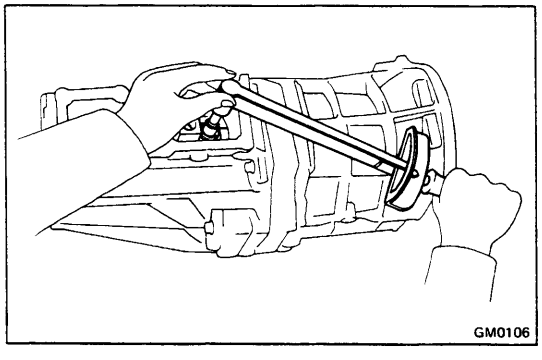
GM0106

(e) Install and torque the shift lever housing bolt.

Torque: 390 kg-cm (28 ft-lb, 38 N·m)

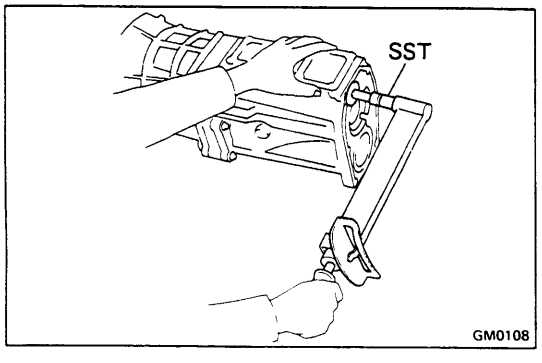

GM0108

(f) Using SST, install and torque the plug.

SST 09923-00010

Torque: 380 kg-cm (27 ft-lb, 37 N·m)

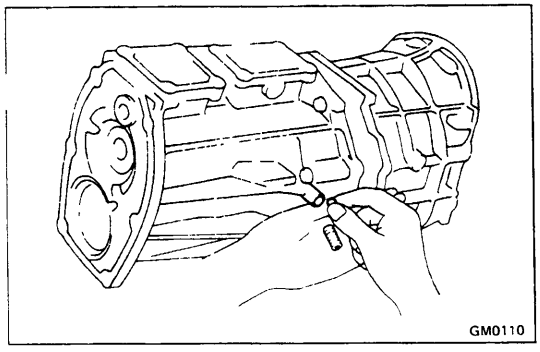
GM0110

42. INSTALL LOCKING BALL, SPRING AND SCREWPLUG

(a) Apply liquid sealer to the plug.

(b) Install the locking ball and spring.

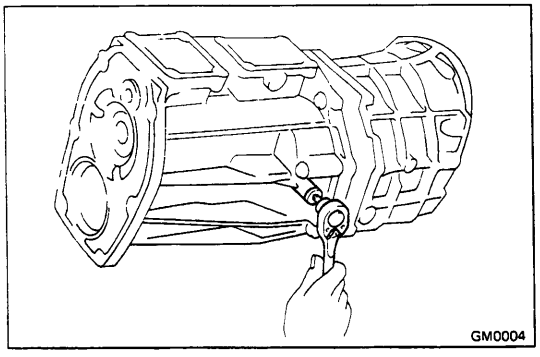
GM0004

(c) Install and torque the plug.

Torque: 190 kg-cm (14 ft-lb, 19 N·m)

43. AFTER INSTALLING EXTENSION HOUSING OR TRANSFER ADAPTER CHECK FOLLOWING ITEMS

(a) Check to see that the input and output shafts rotate smoothly.

(b) Check to see that shifting can be made smoothly to all positions.

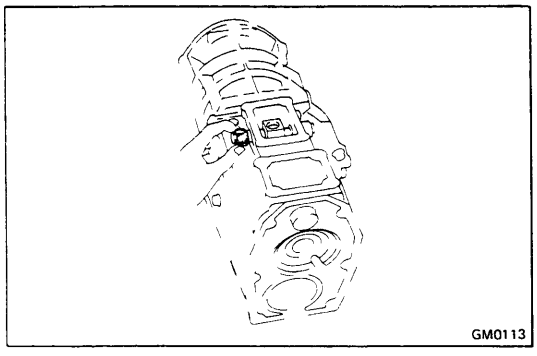
GM0113

44. INSTALL RESTRICT PINS

(a) Install the black pin on the reverse gear/5th gear side.

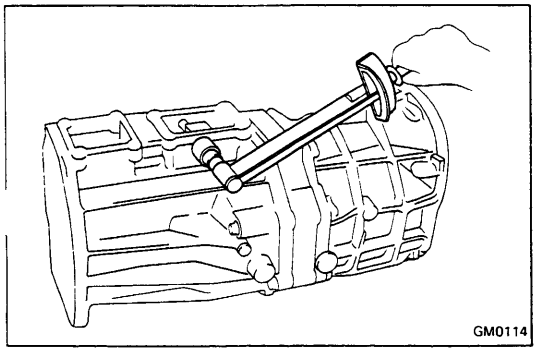
GM0114

(b) Install another pin and torque the pins.

Torque: 280 kg-cm (20 ft-lb, 27 N·m)

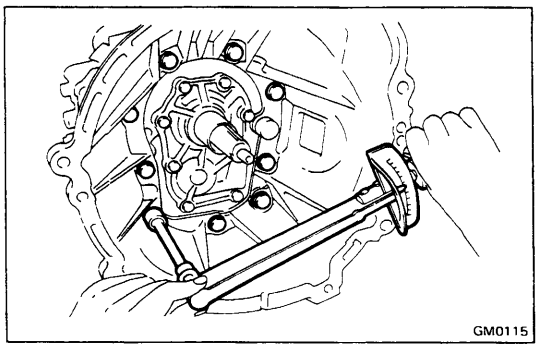

45. INSTALL CLUTCH HOUSING

(a) Install the clutch housing.

(b) Install and torque the bolts.

Torque: 380 kg-cm (27 ft-lb, 37 N·m)

46. INSTALL SHIFT LEVER RETAINER WITH NEW GASKET

Torque: 185 kg-cm (13 ft-lb, 18 N·m)

47. INSTALL BACK-UP LIGHT SWITCH

Torque: 380 kg-cm (27 ft-lb, 37 N·m)

48. INSTALL RELEASE FORK AND BEARING

Apply molybdenum disulphide lithium base grease to the following parts:

- Release bearing hub inside groove
- Input shaft spline
- Release fork contact surface

INSTALLATION OF TRANSMISSION

NOTE: For the transmission with a transfer (4WD) refer to INSTALLATION OF TRANSFER on page TF-25.

1. PLACE TRANSMISSION AT INSTALLATION POSITION

Insert the extension housing between the member and floor and then side the transmission forward.

Align the input shaft spline with the clutch disc, and push the transmission fully into position.

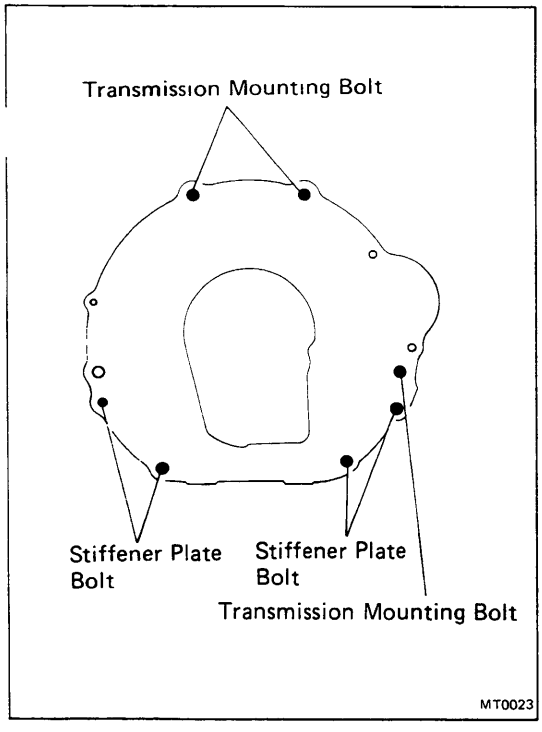

2. INSTALL TRANSMISSION BOLTS AND STIFFENER BOLTS

Torque:

Transmission Mounting Bolt	**730 kg-cm (53 ft-lb, 72 N·m)**
Stiffener Plate Bolt	**380 kg-cm (27 ft-lb, 37 N·m)**

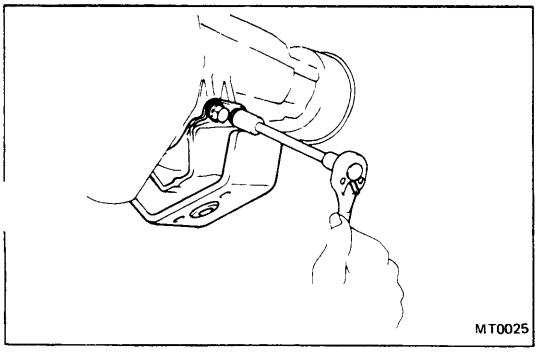

3. INSTALL ENGINE REAR MOUNTING AND BRACKET

(a) Install the engine rear mounting. Torque the bolts.

Torque: 260 kg-cm (19 ft-lb, 25 N·m)

(b) Raise the transmission slightly by raising the engine with a jack and a wooden block under the transmission.

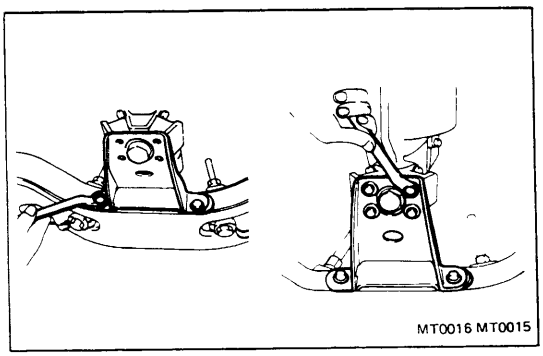

(c) Install the engine rear mounting bracket to the support member. Torque the bolts.

Torque: 130 kg-cm (9 ft-lb, 13 N·m)

(d) Lower the transmission and rest it on the extension housing.

(e) Install the bracket to the mounting. Torque the bolts.

Torque: 260 kg-cm (19 ft-lb, 25 N·m)

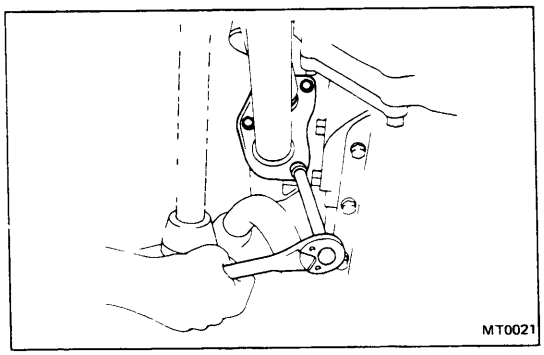

4. REMOVE PIECE OF WOOD FROM FRONT CROSSMEMBER

5. INSTALL EXHAUST PIPE, BRACKET AND PIPE

(a) Install the exhaust pipe to the manifold.

Torque: 400 kg-cm (29 ft-lb, 39 N·m)

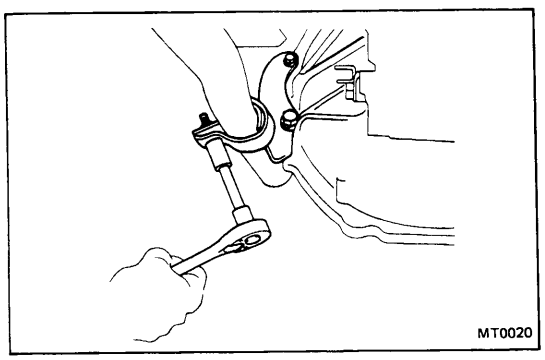

(b) Install the pipe bracket to the clutch housing.

Torque: Upper 380 kg-cm (27 ft-lb, 37 N·m)
Lower 700 kg-cm (51 ft-lb, 69 N·m)

(c) Install the exhaust pipe clamp.

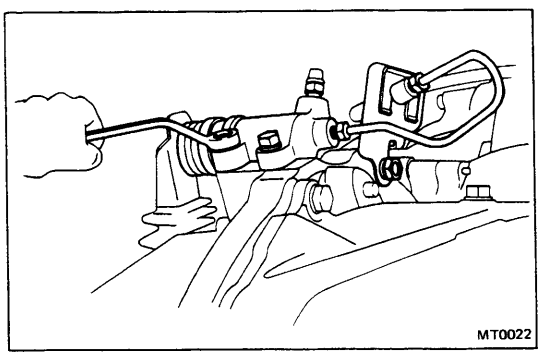

6. INSTALL STARTER LOWER MOUNTING BOLT AND RELEASE CYLINDER TUBE BRACKET

Torque: 400 kg-cm (29 ft-lb, 39 N·m)

7. INSTALL CLUTCH RELEASE CYLINDER

Torque: 120 kg-cm (9 ft-lb, 12 N·m)

8. CONNECT SPEEDOMETER CABLE AND BACK-UP LIGHT SWITCH

9. CONNECT PROPELLER SHAFT
(See page PR-2)

10. FILL TRANSMISSION WITH OIL

Oil grade: API GL-4 or GL-5 SAE 75W-90

Quantity:

2WD		**2.4 liters (2.5 US qts, 2.1 Imp. qts)**
4WD	**W56**	**3.0 liters (3.2 US qts, 2.6 Imp. qts)**
	G52	**3.9 liters (4.1 US qts, 3.4 Imp. qts)**

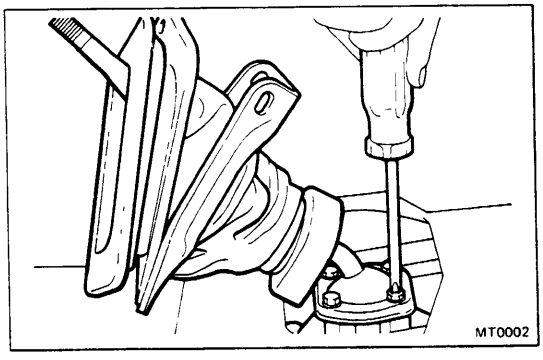

11. LOWER VEHICLE

12. INSTALL STARTER UPPER MOUNTING NUT

13. INSTALL SHIFT LEVER

(a) Apply MP grease to the shift lever.

(b) Install the shift lever to the transmission.

14. CONNECT BATTERY CABLE TO NEGATIVE TERMINAL

15. PERFORM ROAD TEST

Check for abnormal noise and smooth operation.

AUTOMATIC TRANSMISSION

	Page
TROUBLESHOOTING	AT-2
ATF INSPECTION	AT-4
ADJUSTMENTS	AT-4
TEST	AT-5
AUTOMATIC SHIFT DIAGRAM	AT-13
ELECTRIC CONTROL	AT-15
ON-VEHICLE REPAIR	AT-18
REMOVAL OF TRANSMISSION	AT-26
DISASSEMBLY OF TRANSMISSION	AT-29
COMPONENT GROUP DISASSEMBLY INSPECTION AND ASSEMBLY	AT-35
Oil Pump	AT-36
OD Input Shaft and Clutch	AT-39
OD Case and Brake	AT-44
Front Clutch	AT-47
Rear Clutch	AT-51
Center Support Assembly	AT-54
Planetary Gear Output Shaft	AT-60
Transmission Case and Rear Brake Pistons	AT-65
Valve Body	AT-68
Governor Body	AT-90
Extension Housing	AT-91
Torque Converter	AT-92
Electrical Parts	AT-92
ASSEMBLY OF TRANSMISSION	AT-93
INSTALLATION OF TRANSMISSION	AT-103

TROUBLESHOOTING

Problem	Possible cause	Remedy	Page
Fluid discolored or smells burnt	Fluid contaminated	Replace fluid	MA-14
	Torque converter faulty	Replace torque converter	AT-28,103
	Transmission faulty	Disassemble and inspect transmission	AT-29
Vehicle does not move in any drive range	Manual shift linkage out of adjustment	Adjust shift linkage	AT-4
	Valve body or primary regulator faulty	Inspect valve body	AT-68
	Parking lock pawl faulty	Inspect parking pawl	AT-22
	Torque converter faulty	Replace torque converter	AT-28,103
	Converter drive plate broken	Replace torque converter	AT-28,103
	Oil pump intake strainer blocked	Clean strainer	AT-18
Shift lever position incorrect	Manual shift linkage out of adjustment	Adjust shift linkage	AT-4
	Manual valve and lever faulty	Inspect valve body	AT-68
	Transmission faulty	Disassemble and inspect transmission	AT-29
Harsh engagement into any drive range	Throttle cable out of adjustment	Adjust throttle cable	AT-4
	Valve body or primary regulator faulty	Inspect valve body	AT-68
	Accumulator pistons faulty	Inspect accumulator pistons	A-17
	Transmission faulty	Disassemble and inspect transmission	AT-29
Delayed 1-2, 2-3 or **3-OD up-shift**, or down-shifts from OD-3 or 3-2 then shifts back to OD or 3	Throttle cable out of adjustment	Adjust throttle cable	AT-4
	Throttle cable and cam faulty	Inspect throttle cable and cam	AT-21
	Governor faulty	Inspect governor	AT-90
	Valve body faulty	Inspect valve body	AT-68
Slips on 1-2, 2-3 or 3-OD up-shift, or slips or shudders on take-off	Manual shift linkage out of adjustment	Adjust shift linkage	AT-4
	Throttle cable out of adjustment	Adjust throttle cable	AT-4
	Valve body faulty	Inspect valve body	AT-68
	Transmission faulty	Disassemble and inspect transmission	AT-29
Drag, binding or tie-up on 1-2,2-3 or 3-OD up-shift	Manual shift linkage out of adjustment	Adjust shift linkage	AT-4
	Valve body faulty	Inspect valve body	AT-68
	Transmission faulty	Disassemble and inspect transmission	AT-29

TROUBLESHOOTING (Cont'd)

Problem	Possible cause	Remedy	Page
Harsh down-shift	Throttle cable out of adjustment	Adjust throttle cable	AT-4
	Throttle cable and cam faulty	Inspect throttle cable and cam	AT-21
	Accumulator pistons faulty	Inspect accumulator pistons	A-17
	Valve body faulty	Inspect valve body	AT-68
	Transmission faulty	Disassemble and inspect transmission	AT-29
No down-shift when coasting	Governor faulty	Inspect governor	AT-90
	Valve body faulty	Inspect valve body	AT-68
Down-shift occurs too quick or too late while coasting	Throttle cable out of adjustment	Adjust throttle cable	AT-4
	Throttle cable faulty	Inspect throttle cable	AT-21
	Governor faulty	Inspect governor	AT-90
	Valve body faulty	Inspect valve body	AT-68
	Transmission faulty	Disassemble and inspect transmission	AT-29
No OD-3, 3-2 or 2-1 kick-down	Throttle cable out of adjustment	Adjust throttle cable	AT-4
	Governor faulty	Inspect governor	AT-90
	Valve body faulty	Inspect valve body	AT-68
No engine braking in "2" range	Valve body faulty	Inspect valve body	AT-68
	Transmission faulty	Disassemble and inspect transmission	AT-29
Vehicle does not hold in "P"	Manual shift linkage out of adjustment	Adjust shift linkage	AT-4
	Parking lock pawl cam and spring faulty	Inspect cam and spring	AT-22

NOTE: See page AT-15 for inspection procedures for electrical controls of automatic transmission with overdrive.

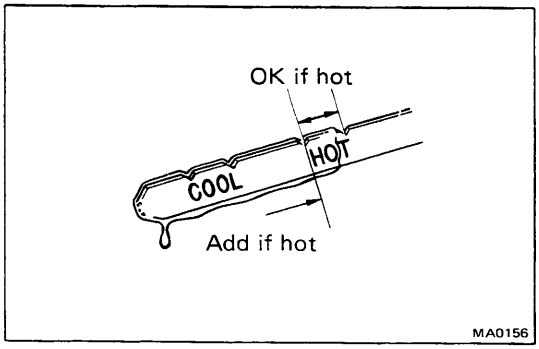

ATF INSPECTION

1. **CHECK FLUID LEVEL (See page MA-19)**
2. **CHECK FLUID CONDITION**
   If the ATF smells burnt or is black, replace it.
3. **REPLACE ATF (See page MA-14)**

ADJUSTMENTS

ADJUSTMENT OF THROTTLE CABLE

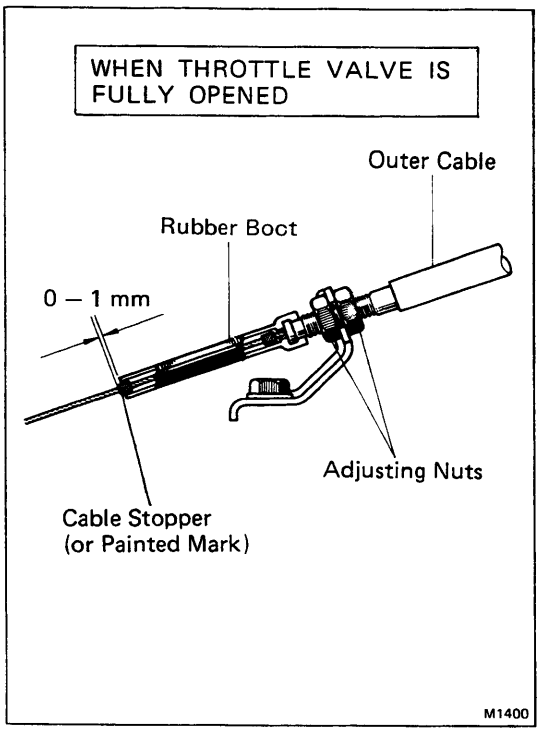

1. **DEPRESS ACCELERATOR PEDAL ALL THE WAY AND CHECK THAT THROTTLE VALVE OPENS FULLY**
   If the throttle valve does not open fully, adjust the accelerator link.
2. **FULLY DEPRESS ACCELERATOR**
3. **LOOSEN ADJUSTMENT NUTS**
4. **ADJUST THROTTLE CABLE**
   (a) Adjust the cable housing so that the distance between the end of the boot and the stopper on the cable is correct.
   Distance: 0 — 1 mm (0 — 0.04 in.)
   (b) Tighten the adjusting nuts.
   (c) Recheck the adjustments.

ADJUSTMENT OF FLOOR SHIFT LINKAGE

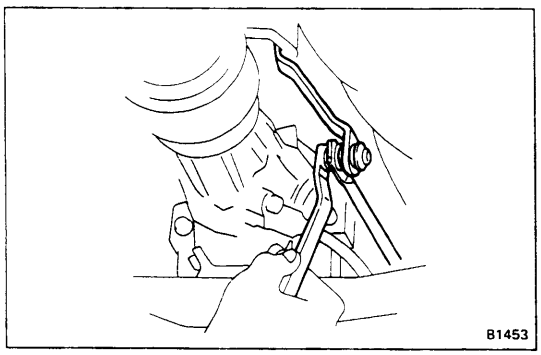

ADJUST SHIFT LINKAGE

(a) Loosen the nut on the shift linkage.
(b) Push the manual lever fully rearward.
(c) Return the lever two notches to the NEUTRAL position.
(d) Set the shift selector in "N".
(e) While holding the selector lightly toward the "R" range side, tighten the shift linkage nut.

ADJUSTMENT OF NEUTRAL START SWITCH

If the engine will start with the shift selector in any range other than "N" or "P", adjustment is required.

1. **LOOSEN NEUTRAL START SWITCH BOLT AND SET SHIFT SELECTOR IN "N" RANGE**
2. **ADJUST NEUTRAL START SWITCH**
   (a) Disconnect the neutral start switch connector.
   (b) Connect the ohmmeter between the terminals.
   (c) Adjust the switch to the point where there is continuity between N and B terminals.
   (d) Connect the neutral start switch connector.
3. **TORQUE NEUTRAL START SWITCH BOLT**
   Torque: 55 kg-cm (48 in.-lb, 5.4 N·m)

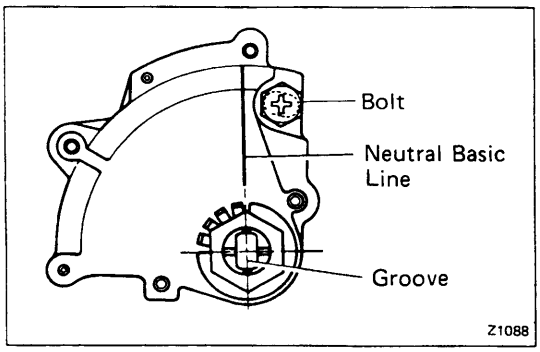

TEST

ALL TEST

The object of this test is to check the overall performance of the transmission and engine by measuring the maximum engine speeds in the "D" and "R" ranges.

CAUTION:

(a) Perform this test at normal operation fluid temperature (50 – 80°C or 122 – 176°F).

(b) Do not continuously run this test longer than 5 seconds.

MEASURE STALL SPEED

(a) Chock the front and rear wheels.

(b) Mount an engine tachometer.

(c) Fully apply the parking brake.

(d) Step down strongly on the brake pedal with your left foot.

(e) Start the engine.

(f) Shift into "D" range. Step all the way down on the accelerator pedal with your right foot. Quickly read the highest engine rpm at this time.

Stall speed:

22R Engine	**1,850 ± 150 rpm**
22R-E Engine	**1,900 ± 150 rpm**

(g) Perform the same test in "R" range.

EVALUATION

(a) If the engine speed is the same for both ranges but lower than specified value:

- Engine output is insufficient.
- Stator one-way clutch is not operating properly.

NOTE: If more than 600 rpm below the specified value, the torque converter could be at fault.

(b) If the stall speed in "D" range is higher than specified:

- Line pressure too low
- Front clutch slipping
- One-way clutch No.2 not operating properly.
- OD one-way clutch not operating properly

(c) If the stall speed in "R" range is higher than specified:

- Line pressure too low
- Rear clutch slipping
- Brake No.3 slipping
- OD one-way clutch not operating properly

(d) If the stall speed at "R" and "D" range is higher than specified:

- Line pressure too low
- Improper fluid level
- OD one-way clutch not operating properly

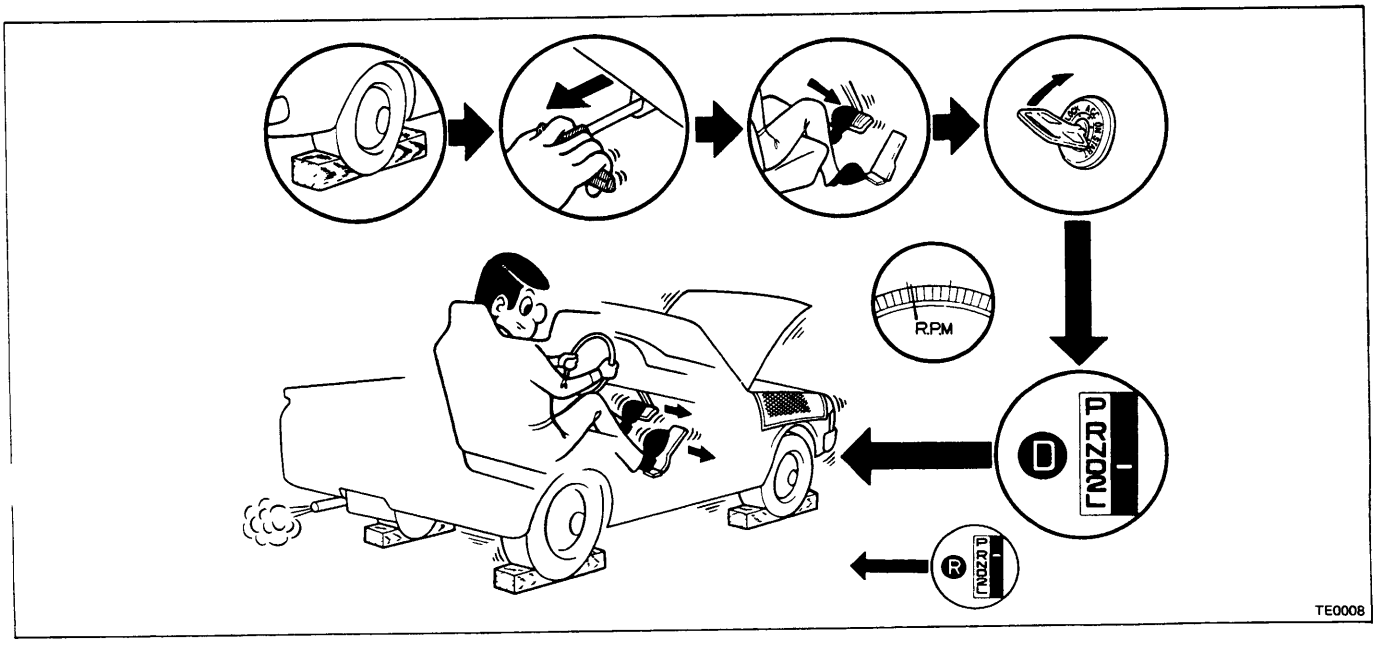

TIME LAG TEST

If the shift lever is shifted while the engine is idling, there will be a certain time elapse or lag before shock can be felt. This is used for checking the condition of the OD clutch, front clutch, rear clutch and brake No.3.

MEASURE TIME LAG

(a) Fully apply the parking brake.

(b) Start the engine and check the idle speed.

Idle speed (A/C OFF)
22R Engine, 22R-E Engine:
"N" range 750 rpm

(c) Shift the shift lever from "N" to "D" range. Using a stop watch, measure the time it takes from shifting the lever until the shock is felt.

Time lag: Less than 1.2 seconds

(d) In same manner, measure the time lag for "N" → "R".

Time lag: Less than 1.5 seconds

CAUTION:

(a) Perform this test at normal operation fluid temperature (50 — 80°C or 122 — 176°F).

(b) Be sure to allow a one minute interval between tests.

(c) Make three measurements and take the average value.

EVALUATION

(a) If "N" → "D" time lag is longer than specified:
- Line pressure too low
- Front clutch worn
- OD one-way clutch not operating properly

(b) If "N" → "R" time lag is longer than specified:
- Line pressure too low
- Rear clutch worn
- Brake No.3 worn
- OD one-way clutch not operating properly

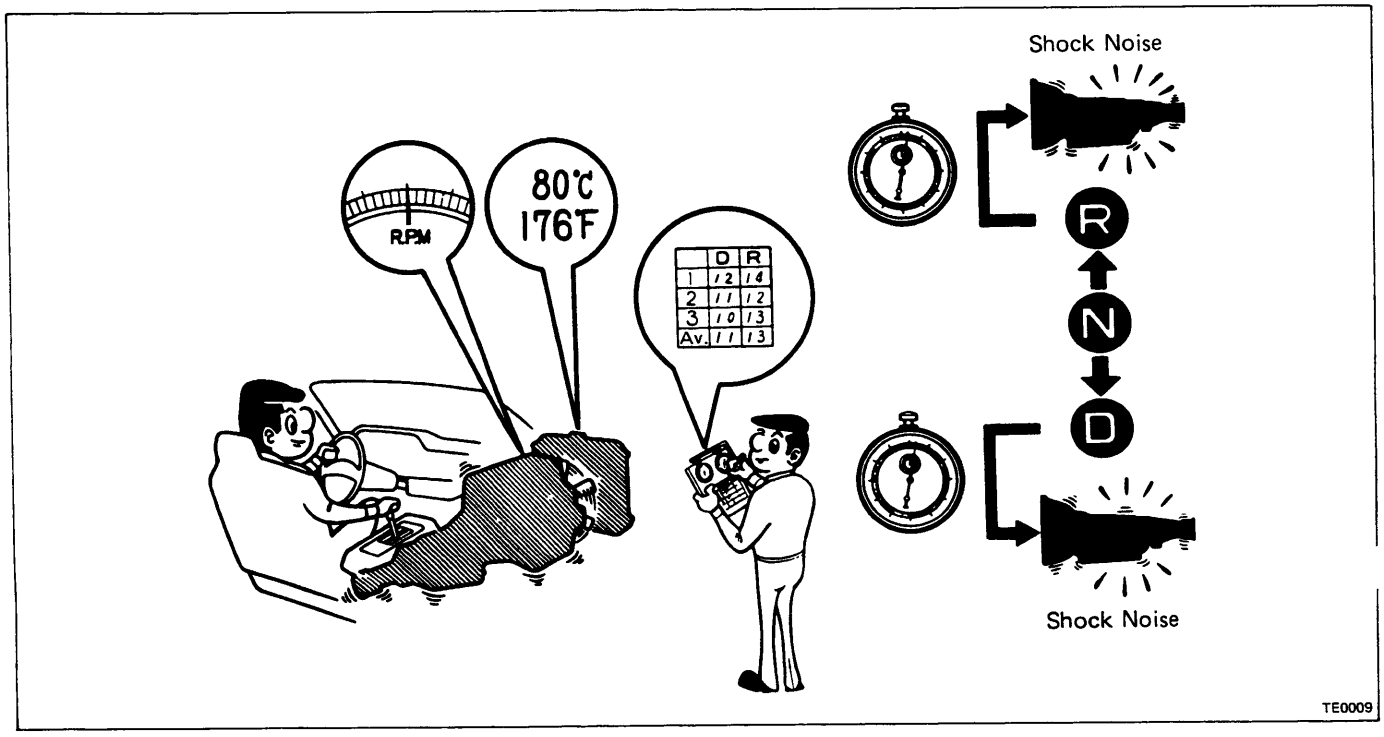

HYDRAULIC TEST

PREPARATION

(a) Warm up the transmission fluid.

(b) Chock the front wheels.

(c) Jack up rear of the vehicle and support it on stands.

(d) Remove the transmission case test the plugs and mount hydraulic pressure gauges.

SST 09992-00093

CAUTION:

(a) Perform this test at normal operation fluid temperature (50 — 80°C or 122 — 176°F).

(b) Measurement can be made with a 1,000 rpm test, but if tests are to be made at 1,800 and 3,500 rpm, it would be safer to road test or on a chassis dynamometer because an on-stand test could be hazardous.

2. MEASURE GOVERNOR PRESSURE

(a) Check that the parking brake is not applied.

(b) Start the engine.

(c) Shift into "D" range and measure the governor pressures at the speeds specified in the table.

EVALUATION

If governor pressure is defective:

- Line pressure defective
- Fluid leakage in governor pressure circuit
- Governor valve operation defective

Output shaft rpm	Vehicle speed (Reference)			Governor pressure		
	22R Engine	22R-E Engine		kg/cm^2	psi	kPa
		Ex. C & C	C & C			
1,000	32 km/h (20 mph)	33 km/h (21 mph)	29 km/h (18 mph)	0.9 — 1.5	13 — 21	88 — 147
1,800	58 km/h (36 mph)	59 km/h (37 mph)	52 km/h (32 mph)	1.6 — 2.2	23 — 31	157 — 216
3,500	114 km/h (71 mph)	115 km/h (71 mph)	100 km/h (62 mph)	4.1 — 5.3	58 — 75	402 — 520

1,800 and 3,500 rpm Test

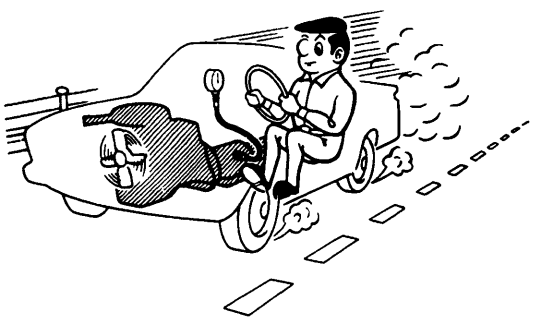

1,000 rpm Test

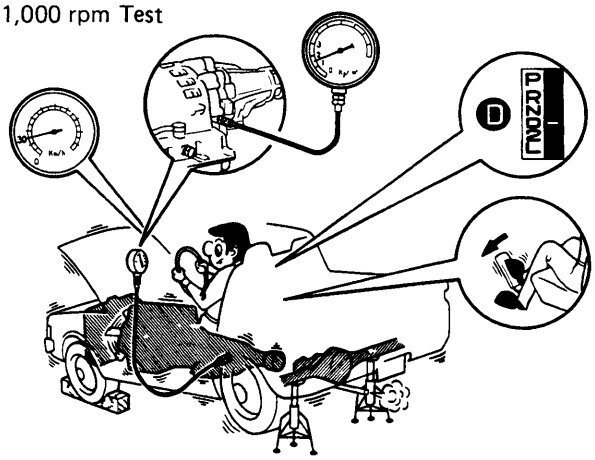

TE0010 TE0011

3. MEASURE LINE PRESSURE

(a) Fully apply the parking brake and chock the four wheels.

(b) Start the engine and shift into "D" range.

(c) Step down strongly on the brake pedal with your left foot and, while manipulating the accelerator pedal with the right foot, measure the line pressures at the engine speeds specified in the table below.

(d) In the same manner, perform the test in "R" range.

[22R Engine]

Engine speed	Line pressure	kg/cm² (psi, kPa)
	"D" range	"R" range
Idling	3.5 — 4.4 (50—63, 343—431)	5.0 — 6.4 (71—91, 490—628)
Stall	9.6 — 11.0 (137-156, 941-1,079)	13.7 — 17.0 (195-242, 1,344-1,667)

[22R-E Engine]

Engine speed	Line pressure	kg/cm² (psi, kPa)
	"D" range	"R" range
Idling	4.6 — 5.4 (65—77, 451—530)	7.0 — 8.2 (100—117, 686—804)
Stall	10.1 — 11.9 (144-169, 990-1,167)	15.0 — 19.0 (213-270, 1,471-1,863)

(e) If the measured pressures are not up to specified values, recheck the throttle cable adjustment and retest.

EVALUATION

(a) If the measured values at all ranges are higher than specified:
- Throttle cable out-of-adjustment
- Throttle valve defective
- Regulator valve defective

(b) If the measured values at all ranges are lower than specified:
- Throttle cable out-of-adjustment
- Throttle valve defective
- Regulator valve defective
- Oil pump defective
- OD clutch defective

(c) If pressure is low in "D" range only:
- "D" range circuit fluid leakage
- Front clutch defective
- OD clutch defective

(d) If pressure is low in "R" range only:
- "R" range circuit fluid leakage
- Rear clutch defective
- Brake No.3 defective
- OD clutch defective

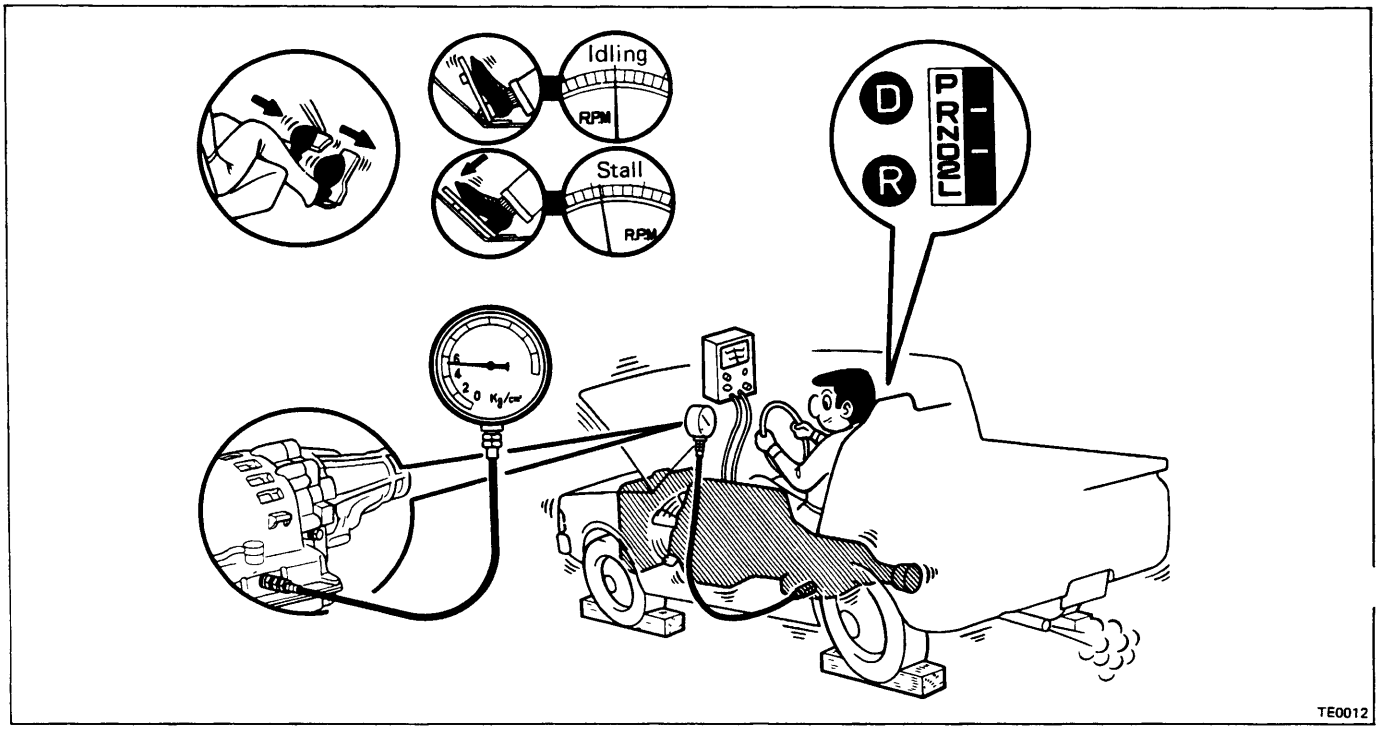

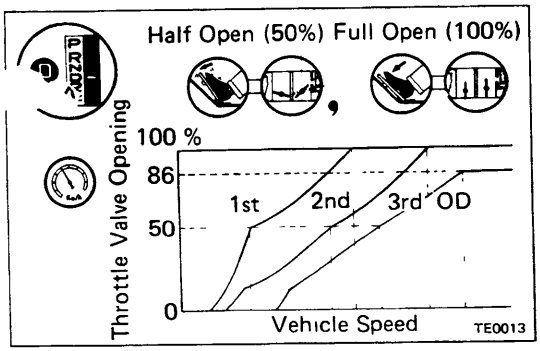

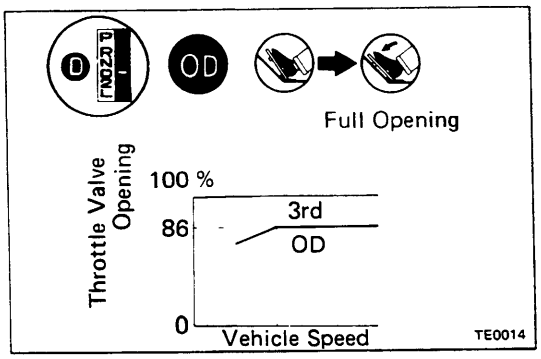

ROAD TEST

CAUTION: Perform the test at normal operation fluid temperature(50 — 80°C or 122 — 176°F).

1. "D" RANGE TEST

Shift into "D" range and while driving with the accelerator pedal held constant at a specified point(throttle valve opening 50 % and 100 %)and the OD swith "ON", check the following points.

(a) At each of the above throttle openings, check to see that 1→2, 2→3 and 3→OD up-shift take place and also that the shift points conform to those shown in the automatic shift diagram.

NOTE: 3→OD up-shift does not take place with a throttle valve opening of more than 86 % or coolant temperature below 50°C (122°F).

EVALUATION

(1) If there is no 1→2 up-shift:
- Governor valve is defective
- 1-2 shift valve is stuck

(2) If there is no 2→3 up-shift:
- 2-3 shift valve is stuck

(3) If there is no 3→OD up-shift (throttle valve opening of less than 86 %):
- 3-OD shift valve is stuck

(4) If the shift point is defective:
- Throttle cable is out-of-adjustment
- Throttle valve, 1-2 shift valve, 2-3 shift valve, 3-OD shift valve etc., are defective

(b) In the same manner, check the shock and the slip at 1→2, 2→3 and 3→OD shifts.

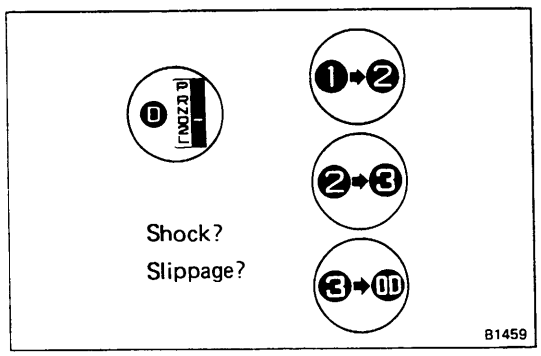

EVALUATION

If the shock is servere,
- Line pressure is too high
- Accumulator is defective
- Check ball is defective

(c) In "D" range 3rd gear or OD, check for abnormal noise and vibration.

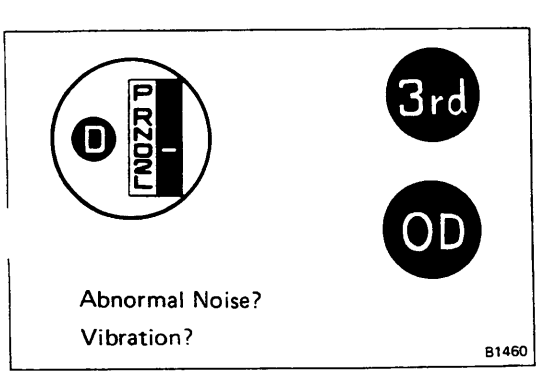

NOTE: Check for cause of abnormal noise and vibration must be made with extreme care as they could also be due to unbalance in propeller shaft, differential, tire, torque converter, etc. or insufficient bending rigidity, etc., in the power train.

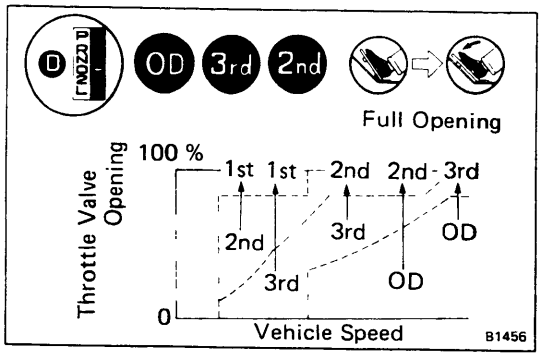

(d) While running in "D" range 2nd, 3rd gears and OD, check to see that the possible kick-down vehicle speed limits for 2→1, 3→1, 3→2, OD→3 and OD→2 kick-downs conform to those indicated in the automatic shift diagram.

(e) Check for abnormal shock and slip at kick-down.

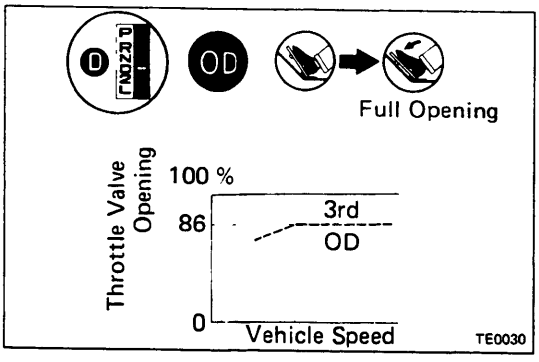

NOTE: OD→3 kick-down is always possible with a throttle valve opening of more than 86 %.

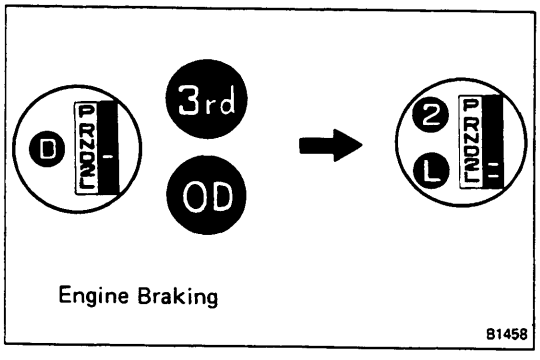

(f) While running in "D" range 3rd gear or OD gear, shift to "2" and "L" ranges and check the engine braking effect at each of these ranges.

EVALUATION

(1) If there is no engine braking effect in "2" range:
- Brake No.1 is defective

(2) If there is no engine braking effect in "L" range:
- Brake No.3 is defective

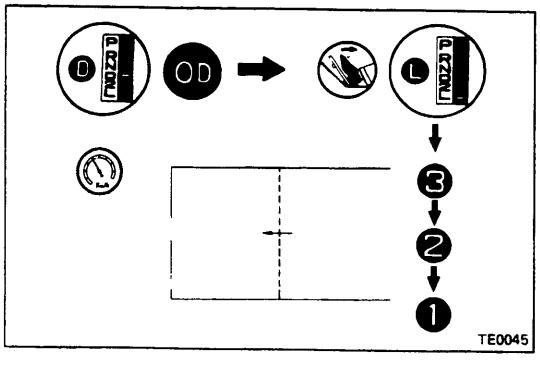

(g) While running in "D" range, release your foot from the accelerator pedal and shift into "L" range. Then check to see if OD→3, 3→2 and 2→1 down-shift points conform to those indicated in the automatic shift diagram.

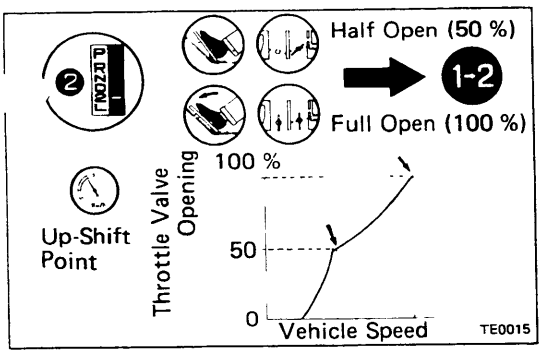

2. "2" RANGE TEST

(a) Shift to "2" range and run with the throttle valve opening at 50 % and 100 % respectively. Then check the 1 → 2 up-shift points at each of the throttle valve openings to see that it conforms to those indicated in the automatic shift diagram.

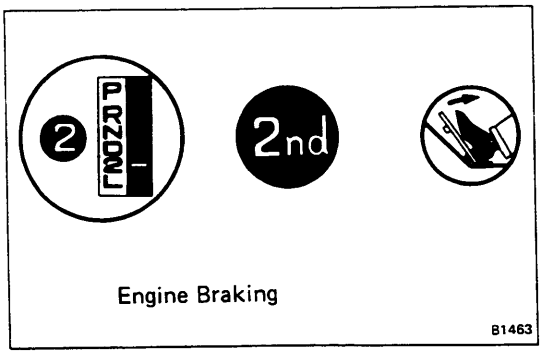

(b) While running in "2" range, 2nd gear, release the accelerator pedal and check the engine braking effect.

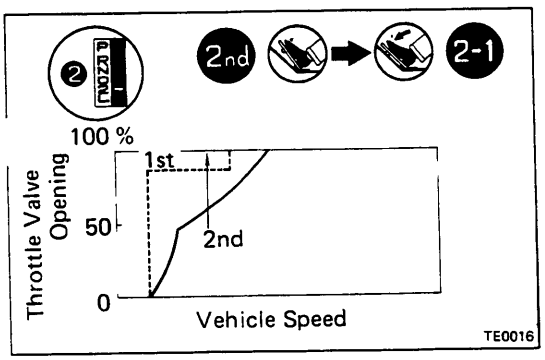

(c) Perform a kick-down from the "2" range and check the possible 2 → 1 kick-down vehicle speed limit to see if it conforms to that indicated in the automatic shift diagram.

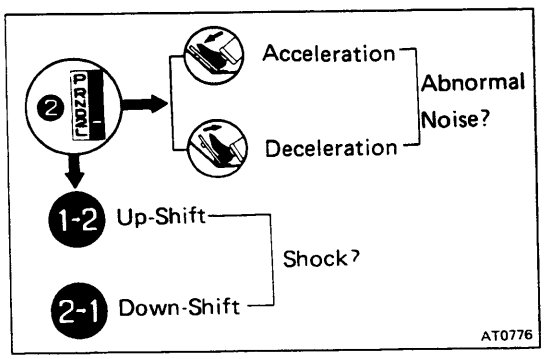

(d) Check for abnorml noise at acceleration and deceleration, and for shock at up-shift and down-shift.

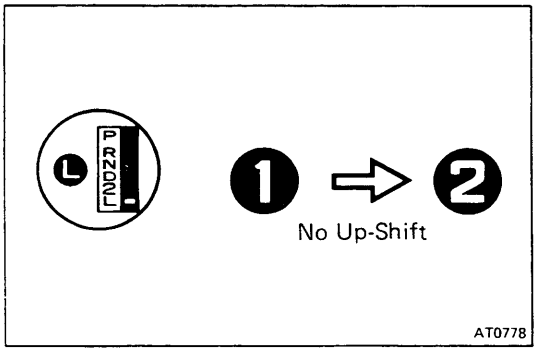

3. "L" RANGE TEST

(a) While running in "L" range, check to see that there is no up-shift to 2nd gear.

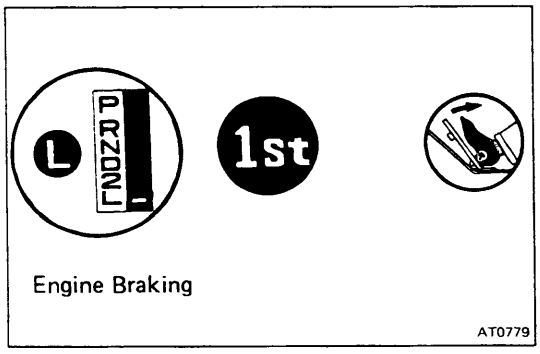

(b) While running in "L" range, release the accelerator pedal and check the engine braking effect.

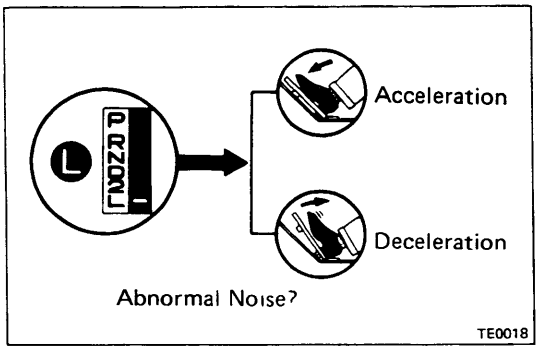

(c) Check for abnormal noise at acceleration and deceleration.

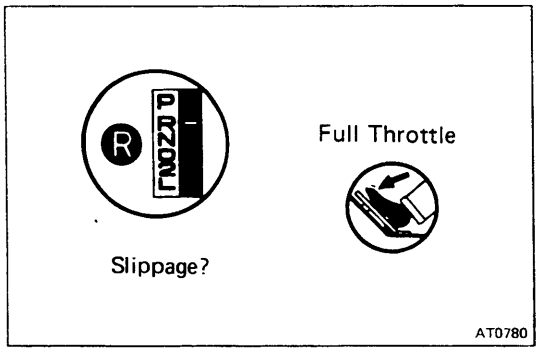

4. "R" RANGE TEST

Shift into "R" range and, while starting at full throttle, check for slipping.

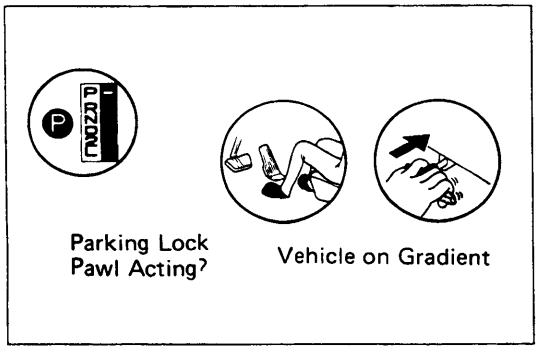

5. "P" RANGE TEST

Stop the vehicle on a gradient (more than 9 %) and after shifting into "P" range, release the parking brake. Then check that the parking lock pawl prevents the vehicle from moving.

AUTOMATIC SHIFT DIAGRAM

A43D 22R Engine

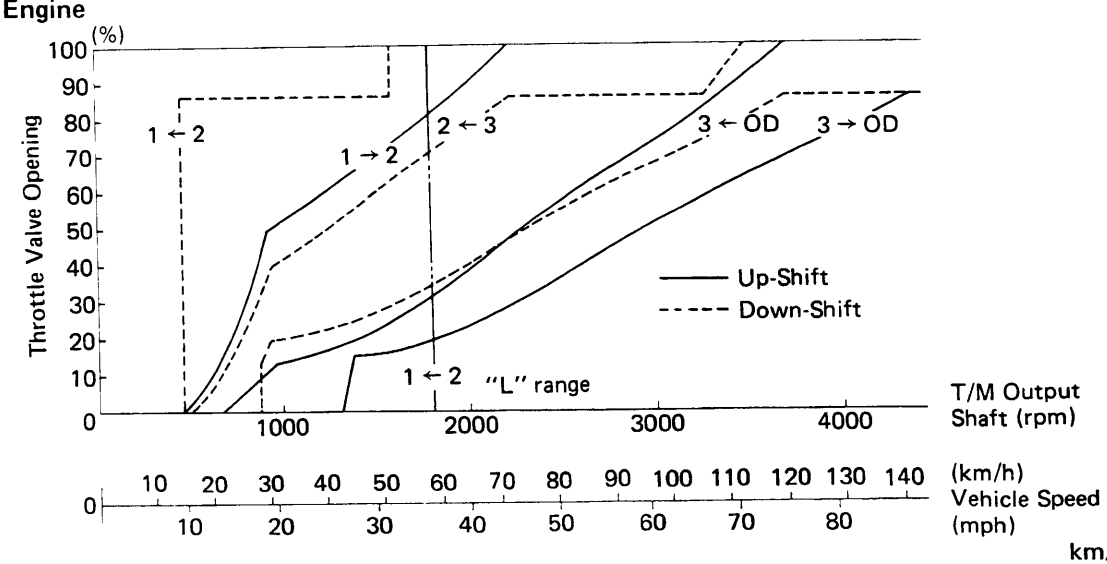

km/h (mph)

Differential gear ratio	"D" range (throttle valve fully open)						"L" range
	1 → 2	2 → 3	3 → OD	OD → 3	3 → 2	2 → 1	2 → 1
3.727	56 — 73 (35 — 45)	105 — 124 (65 — 77)	No shift *1	*2	96 — 114 (60 — 71)	39 — 54 (24 — 34)	45 — 62 (28 — 39)

*1 3 → OD shift up point with closed throttle valve is at 36 — 49 km/h (22 — 30 mph).

*2 OD → 3 down-shift is possible up to maximum speed.

TE0004

AUTOMATIC SHIFT DIAGRAM (Cont'd)

A43D 22R-E Engine

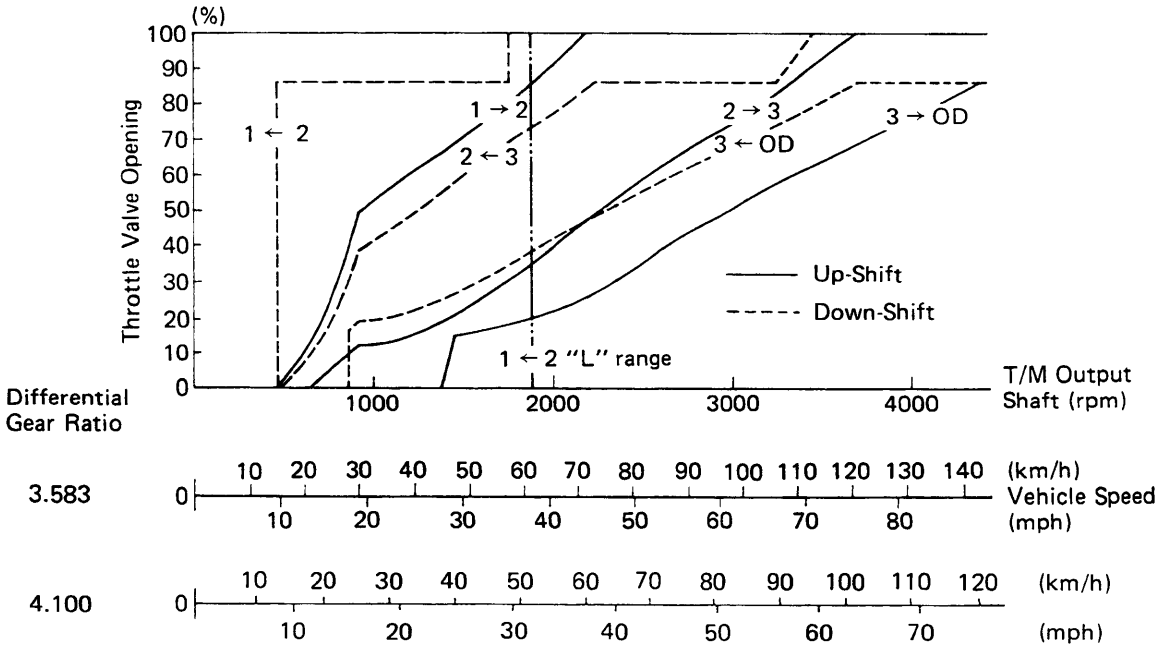

km/h (mph)

Differential gear ratio	"D" range (throttle valve fully open)						"L" range
	1 → 2	2 → 3	3 → OD	OD → 3	3 → 2	2 → 1	2 → 1
3.583	59 – 76 (37 – 47)	110 – 127 (68 – 79)	No shift *1	*2	100 – 117 (62 – 73)	41 – 56 (25 – 35)	47 – 64 (29 – 40)
4.100	51 – 66 (32 – 41)	95 – 111 (59 – 69)	No shift *3	*2	86 – 102 (53 – 63)	35 – 48 (22 – 30)	41 – 56 (25 – 35)

*1 3 → OD shift up point with closed throttle valve is at 39 – 54 km/h (24 – 34 mph).

*2 OD → 3 down-shift is possible up to maximum speed.

*3 3 → OD shift up point with closed throttle valve is at 34 – 47 km/h (21 – 29 mph).

TE0005

ELECTRIC CONTROL

CIRCUIT

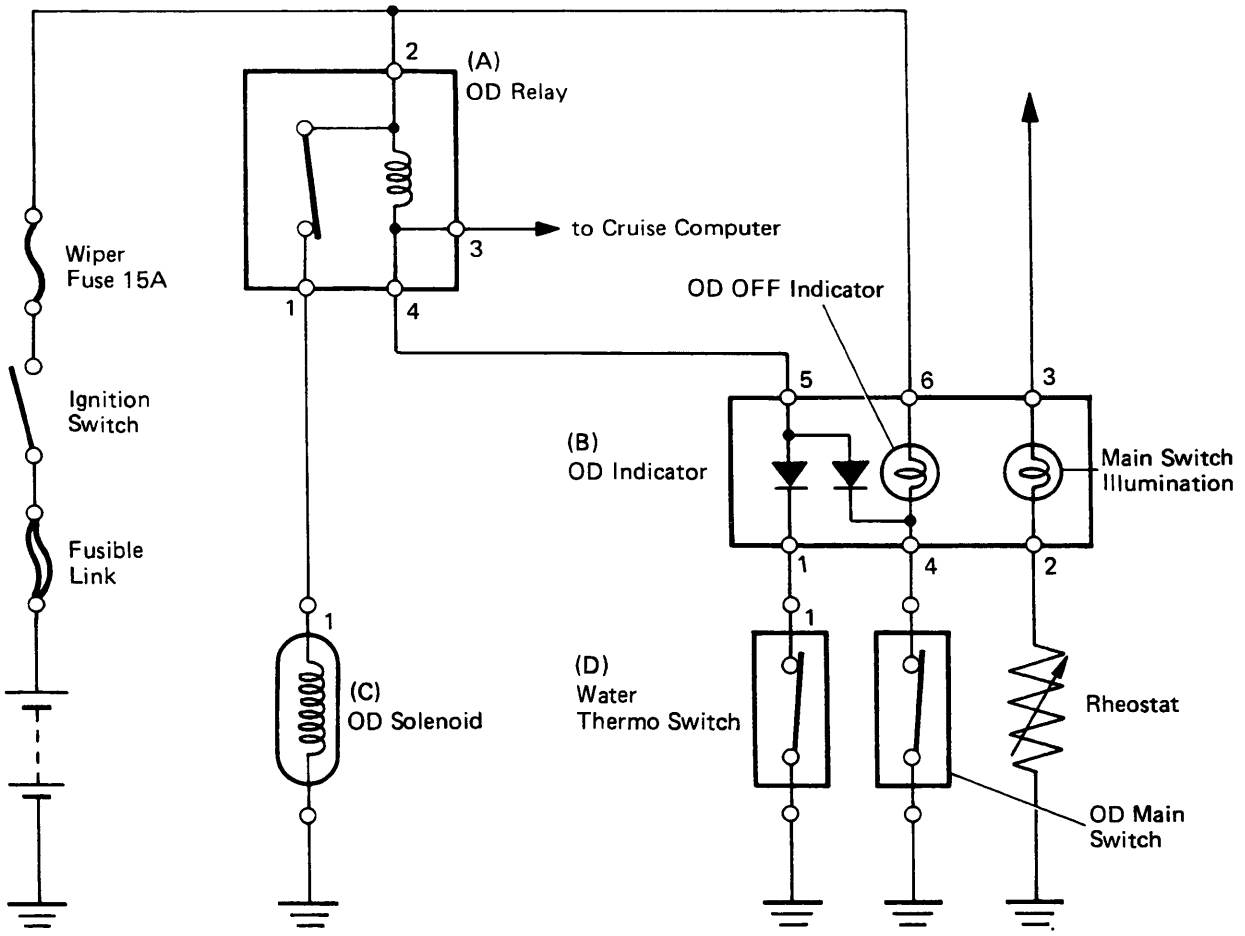

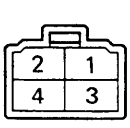

(A) OD Relay



(B) OD Indicator



(C) OD Solenoid



(D) Water Thermo Switch

A00344

INSPECTION OF ELECTRIC CONTROL COMPONENTS

1. INSPECT OVERDRIVE RELAY AND SOLENOID

(a) Turn on the ignition switch and the main switch.

(b) Disconnect the connector from the thermo switch.

(c) Repeatedly ground the side of connector with a sub-wire.

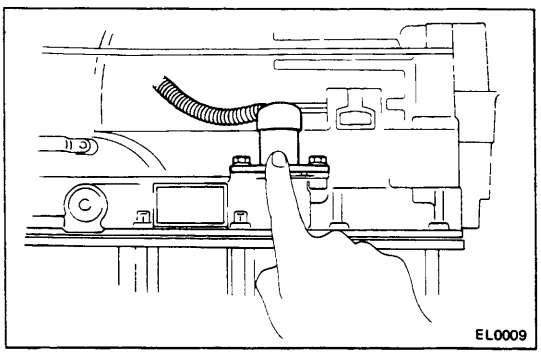

(d) At this time, confirm that an operation sound from the solenoid and overdrive relay can be heard.

If there is no sound from either the solenoid or relay, check them.

2. INSPECT OVERDRIVE RELAY

(a) Remove the overdrive relay from the pedal bracket.

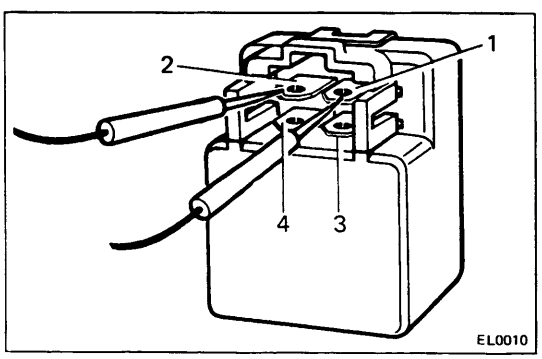

(b) Using an ohmmeter, check that there is continuity between terminals 1 and 2.

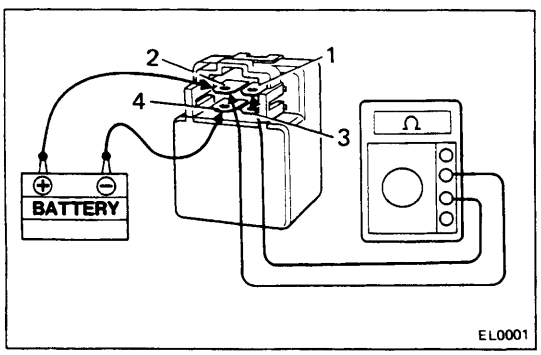

(c) Apply 12 V battery voltage across terminals 2 and 4.

Using an ohmmeter, check that there is no continuity between terminals 1 and 2.

(d) Install the overdrive relay, to the pedal bracket.

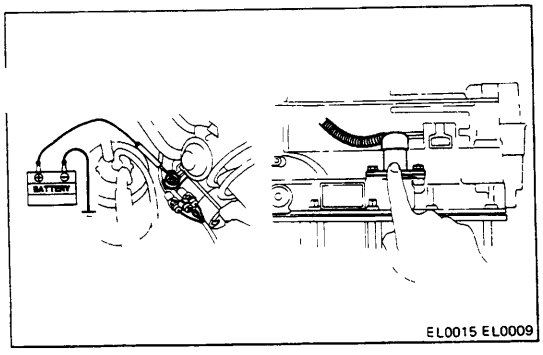

3. INSPECT OVERDRIVE SOLENOID

(a) Disconnect the solenoid wire and apply a 12 V battery voltage to the solenoid.

Confirm that the solenoid operation sound is heard.

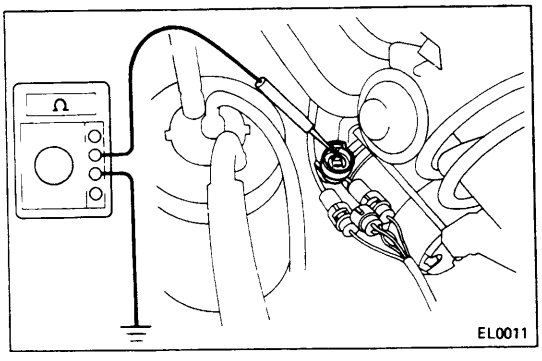

(b) Using an ohmmeter, measure the solenoid coil resistance between the terminal and ground.

Resistance: 13 Ω

(c) Connect the solenoid wire.

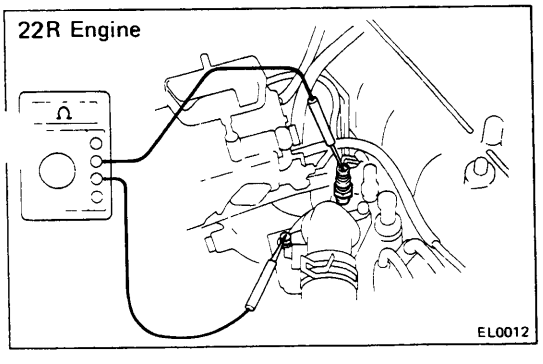

4. INSPECT THERMO SWITCH

(a) Disconnect the thermo switch wire.

(b) Using an ohmmeter, measure the resistance between the terminal and ground.

Coolant temperature	Resistance (Point)
Below 43°C (109°F)	0 Ω (Closed)
Above 55°C (131°F)	∞ Ω (Open)

(c) Connect the thermo switch wire.

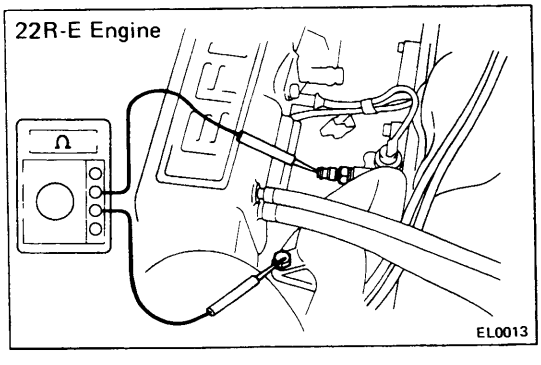

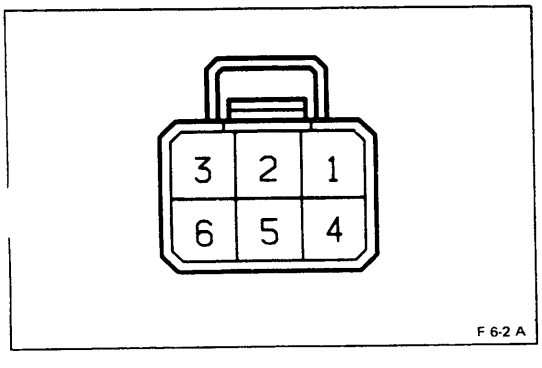

5. INSPECT OVERDRIVE MAIN SWITCH

(a) Remove OD indicator, disconnect the connector.

(b) Using an ohmmeter, check the continuity of the terminals for each switch position.

Terminal / S/W position	1	2	3	4	5	6
ON		○—○				
OFF		○—○		○—		—○

(c) Connect the connector, install the OD indicator.

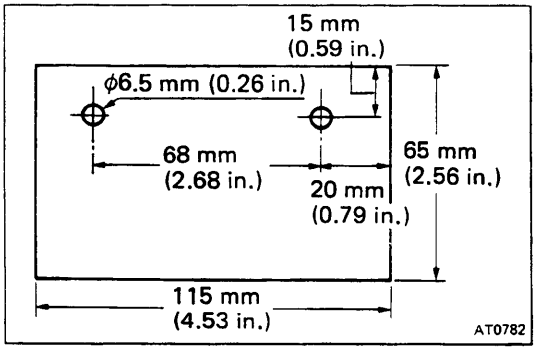

ON-VEHICLE REPAIR

REMOVAL OF VALVE BODY

1. MAKE PLATE TO RETAIN ACCUMULATOR PISTONS

A retainer is helpful for holding accumulator pistons in the case during removal and installation of the valve body. The plate may be made from aluminum or plastic.

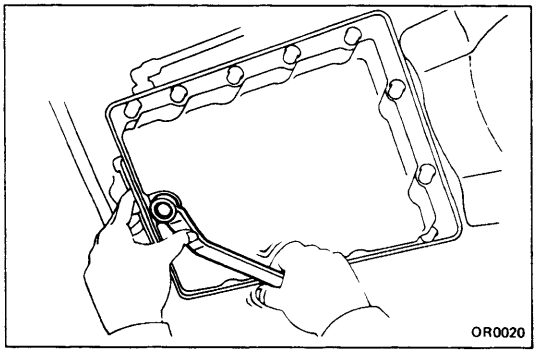

2. CLEAN TRANSMISSION EXTERIOR

To help prevent contamination, clean the exterior of the transmission.

3. DRAIN TRANSMISSION FLUID

Remove the drain play and drain the fluid into a suitable container.

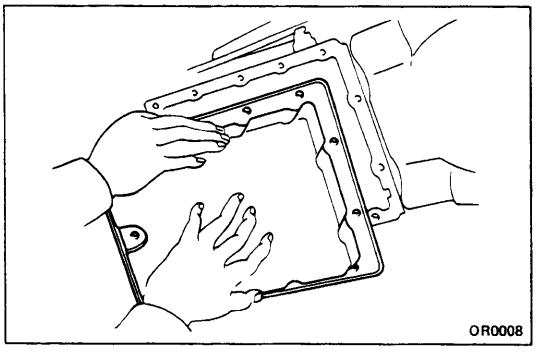

4. REMOVE OIL PAN, FILLER TUBE AND GASKET

CAUTION: Some fluid will remain in the oil pan. Be careful not to damage the filler tube and O-ring.

Remove all pan bolts, and carefully remove the p assembly. Discard the gasket.

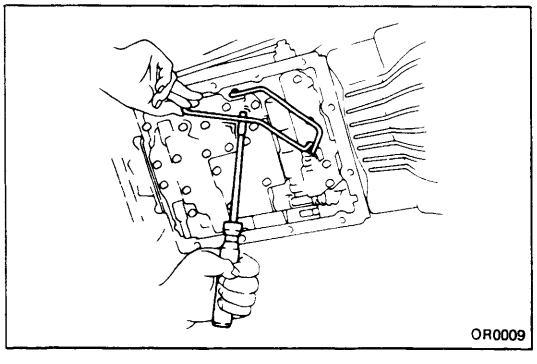

5. REMOVE OIL TUBES

Pry up both tube ends with a large screwdriver and remove the tubes.

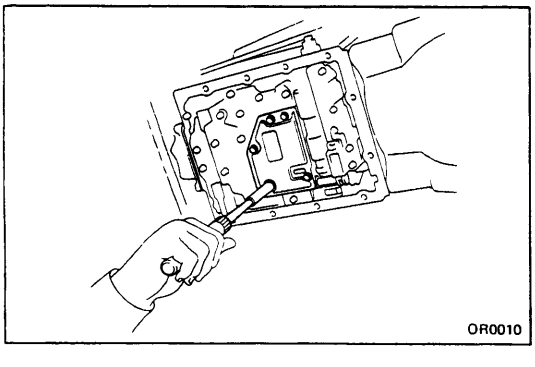

6. REMOVE OIL STRAINER AND GASKET

Remove the five bolts, retainer, oil strainer, and the gasket.

CAUTION: Be careful as some oil will come out with the filter.

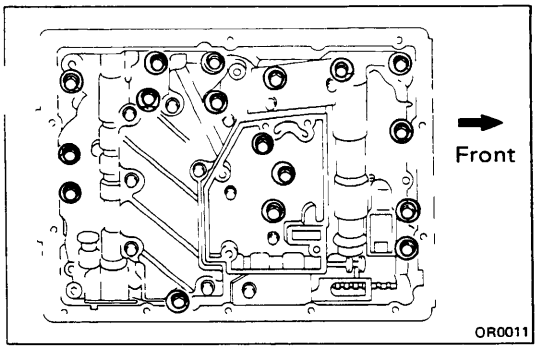

7. REMOVE VALVE BODY

(a) Remove the seventeen bolts.

NOTE: Bolt lengths will be shown for installation, so there is no need to mark them now.

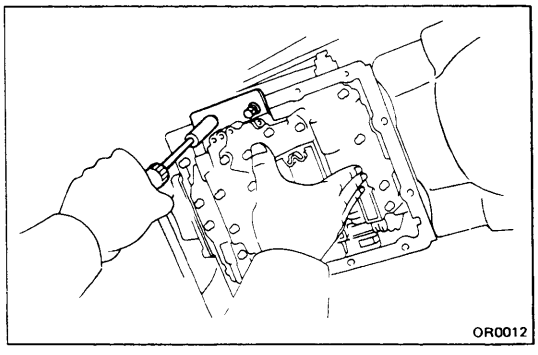

(b) Lower the valve body slightly, and install the accumulator piston retaining plate. Hold it in place with two pan bolts. Hand tighten the bolts with a socket driver.

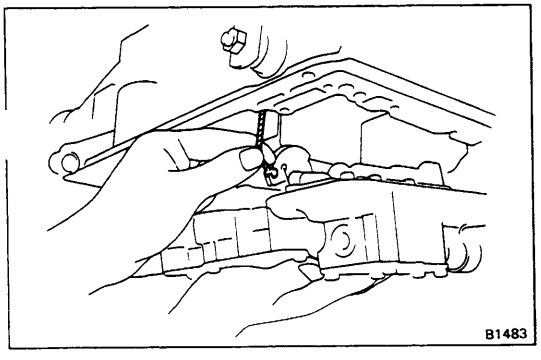

(c) Disconnect the throttle cable from the cam and remove the valve body.

DISASSEMBLY, INSPECTION AND ASSEMBLY OF VALVE BODY

(See page AT-29)

INSTALLATION OF VALVE BODY

1. CONNECT THROTTLE CABLE TO CAM

Push the cable fitting into the cam.

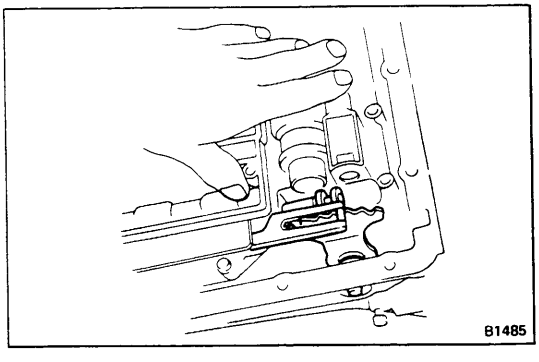

2. ALIGH MANUAL VALVE LEVER WITH MANUAL VALVE AND LOOSELY INSTALL SEVERAL BOLTS IN VALVE BODY

Leave the bolts loose so that the accumulator retaining plate can be removed.

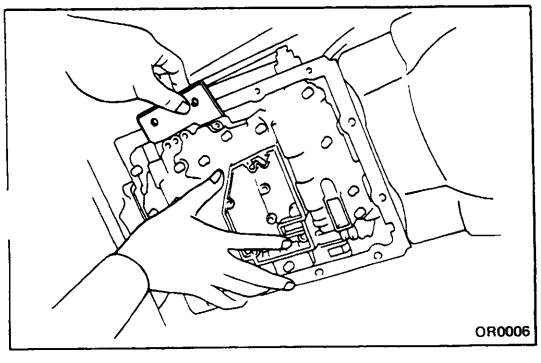

3. REMOVE ACCUMULATOR RETAINING PLATE

Remove the two pan bolts, and slide out the plate.

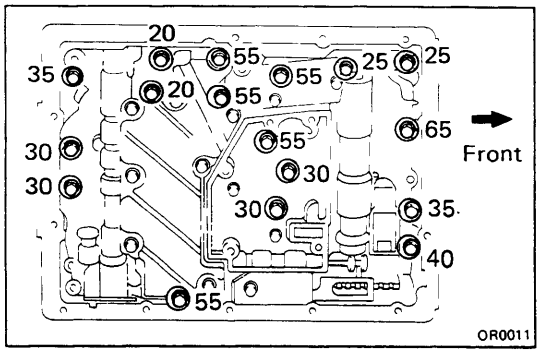

4. INSTALL VALVE BODY BOLTS

Install the bolts as shown. Tighten the bolts evenly.

NOTE: Each bolt length (mm) is indicated in the figu.

Torque: 100 kg-cm (7 ft-lb, 10 N·m)

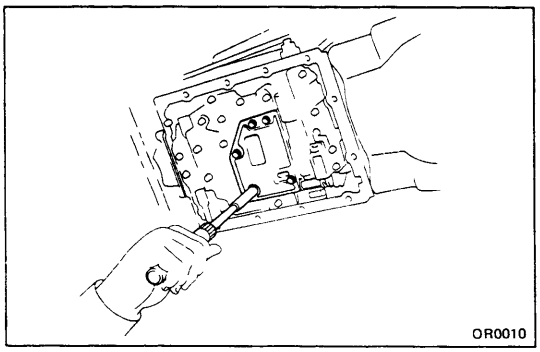

5. INSTALL GASKET AND OIL STRAINER

(a) Install the gasket.

(b) Be sure the strainer is clean. Torque the bolts.

Torque: 55 kg-cm (48 in.-lb, 5.4 N·m)

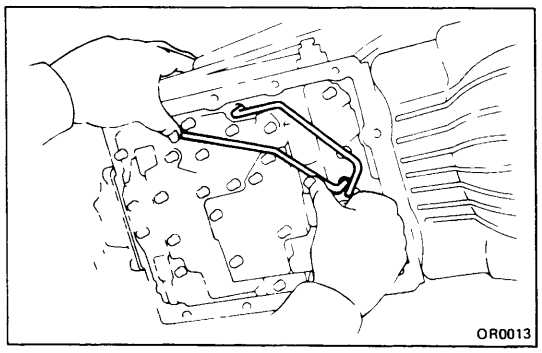

6. INSTALL OIL TUBES

Press the tubes by hand into the positions indicated in the figure.

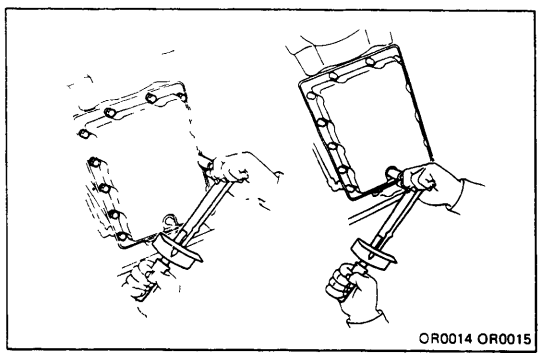

7. INSTALL PAN WITH NEW GASKET

Be sure the pan is clean and the magnet is in place.

CAUTION: Do not use gasket sealer.

Tighten the bolts evenly.

Torque: 45 kg-cm (39 in.-lb, 4.4 N·m)

8. INSTALL DRAIN PLUG

Torque the drain plug.

Torque: 205 kg-cm (15 ft-lb, 20 N·m)

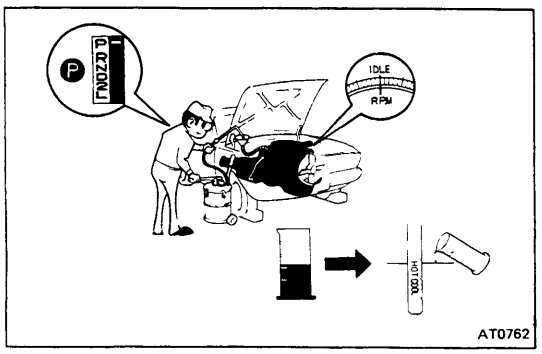

9. FILL TRANSMISSION WITH ATF

Add only about four liters of ATF.

Fluid type: ATF DEXRON II

CAUTION: Do not overfill.

10. CHECK FLUID LEVEL (See page MA-19)

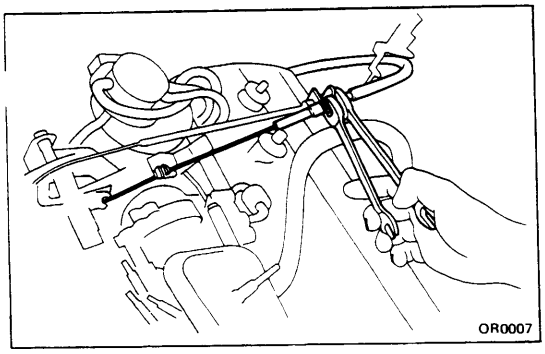

REMOVAL OF THROTTLE CABLE

1. **DISCONNECT THROTTLE CABLE**
   (a) Disconnect the cable housing from the bracket.
   (b) Disconnect the cable from the carburetor linkage.

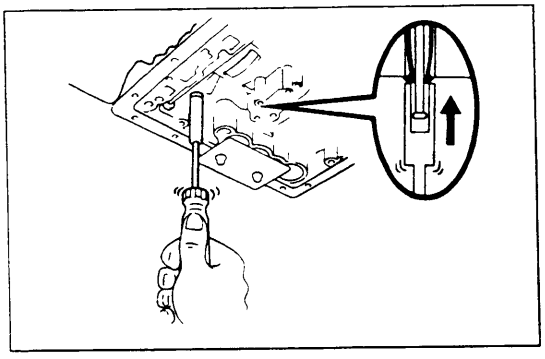

2. **REMOVE VALVE BODY** (See page AT-18)

3. **PUSH THROTTLE CABLE OUT OF TRANSMISSION CASE**
   Using a 10- mm socket, push the throttle cable out.

INSTALLATION OF THROTTLE CABLE

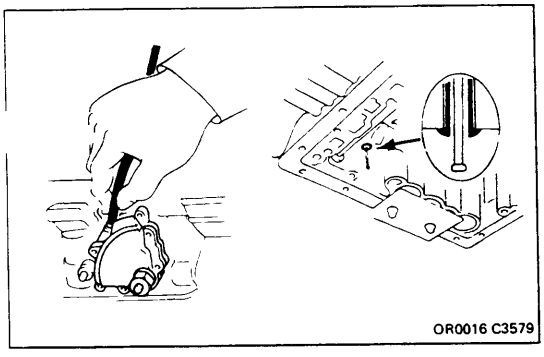

1. **INSTALL CABLE IN TRANSMISSION CASE**
   Be sure to push it in all the way.

2. **INSTALL VALVE BODY** (See page AT-19)

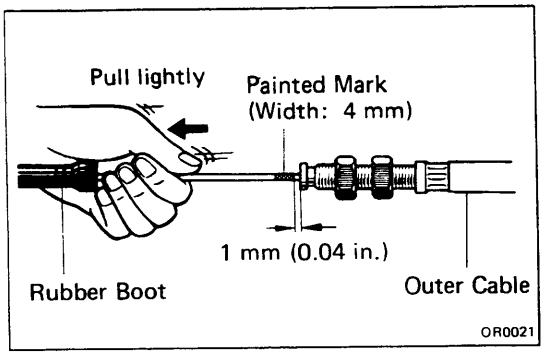

3. **IF THROTTLE CABLE IS NEW, PAINT MARK ON INNER CABLE**
   NOTE: New cables do not have a cable stopper installed. Therefore, to make adjustment possible, paint a mark as described below.
   (a) Pull the inner cable lightly until a slight resistance is felt, and hold it.
   (b) Paint a mark as shown, about 4 mm (0.16 in.) in width.

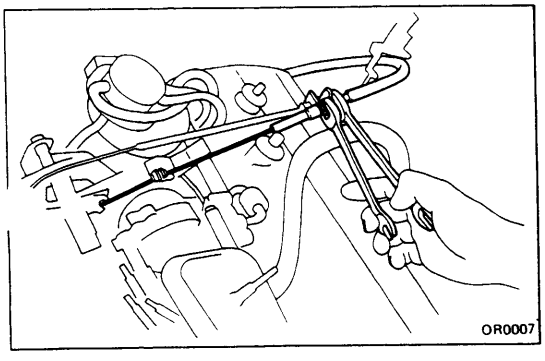

4. **CONNECT THROTTLE CABLE**
   (a) Connect the cable to the carburetor linkage.
   (b) Connect the cable housing to the bracket.

5. **ADJUST THROTTLE CABLE** (See page AT-4)

6. **TEST DRIVE VEHICLE**

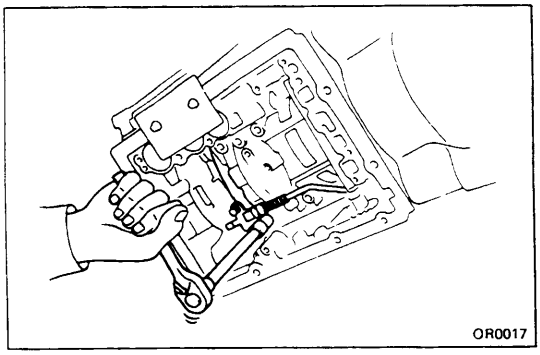
OR0017

REMOVAL OF PARKING LOCK PAWL

1. **REMOVE VALVE BODY (See page AT-18)**
2. **REMOVE PARKING LOCK PAWL BRACKET**
   Remove the two bolts and the bracket.

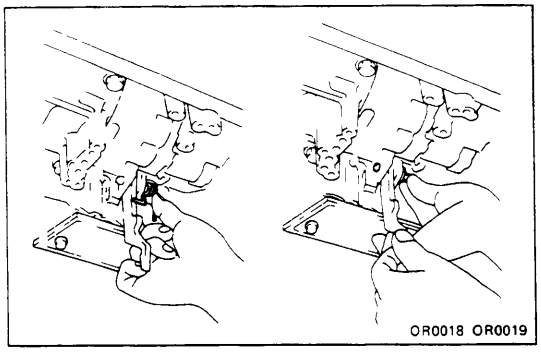
OR0018 OR0019

3. **REMOVE SPRING FROM PARKING LOCK PAWL PIVOT PIN**
4. **REMOVE PIVOT PIN AND PARKING LOCK PAWL**

INSTALLATION OF PARKING LOCK PAWL

1. **INSTALL PARKING LOCK PAWL AND PIVOT PIN**
2. **INSTALL PIVOT SPRING**
3. **INSTALL PARKING LOCK PAWL BRACKET**
   (a) Push the lock rod fully forward.
   (b) Install the two bolts finger tight.
   (c) Check that the pawl operates smoothly.
   (d) Torque the bolts.
   Torque: 75 kg-cm (65 in.-lb, 7.4 N·m)

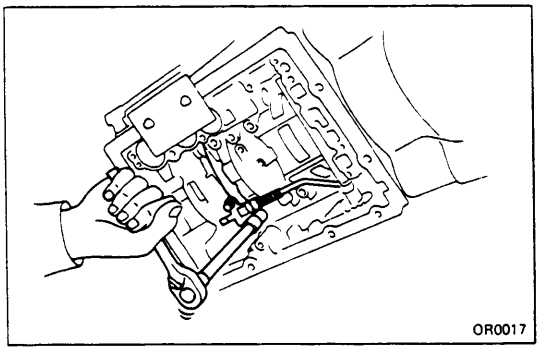
OR0017

4. **INSTALL VALVE BODY (See page AT-19)**

REPLACEMENT OF REAR OIL SEAL

1. **RAISE VEHICLE, AND POSITION PAN TO CATCH ANY FLUID THAT MAY DRIP**
2. **REMOVE PROPELLER SHAFT**
3. **REMOVE REAR DUST SEAL AND OIL SEAL**
   CAUTION: Clean the rear extension housing before removing the seal.
   Using SST, remove the two seals.
   SST 09308-10010

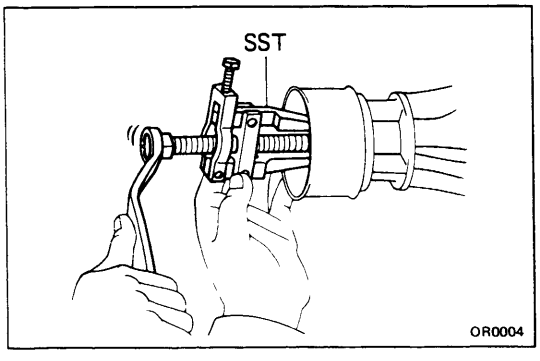

OR0004

4. **INSTALL NEW OIL SEAL AND DUST SEAL**
   Using SST, drive in the oil seal as far as it will go. Drive in the dust seal flush with the housing.
   SST 09325-20010

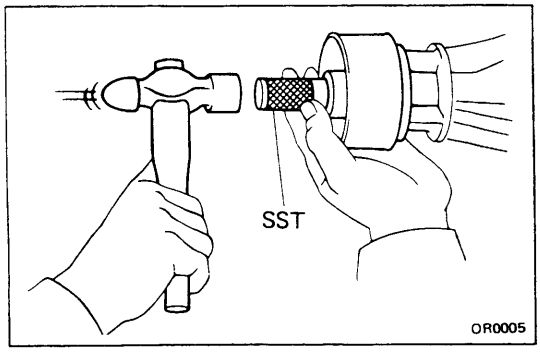

OR0005

5. **INSTALL PROPELLER SHAFT**
6. **LOWER VEHICLE AND CHECK FLUID LEVEL (See page MA-19)**
   Add fluid as necessary.
   Fluid type: ATF DEXRON II
   CAUTION: Do not overfill.

REMOVAL OF GOVERNOR ASSEMBLY

1. **RAISE VEHICLE AND POSITION PAN TO CATCH ANY FLUID THAT MAY DRIP**

2. **REMOVE PROPELLER SHAFT**



3. **DISCONNECT SPEEDOMETER CABLE**

   Loosen serrated collar with water pump pliers. Do not lose the felt dust protector and washer.

4. **REMOVE SPEEDOMETER DRIVEN GEAR**

   Remove one bolt and locking tab. Pry out the speedometer gear with a screwdriver.

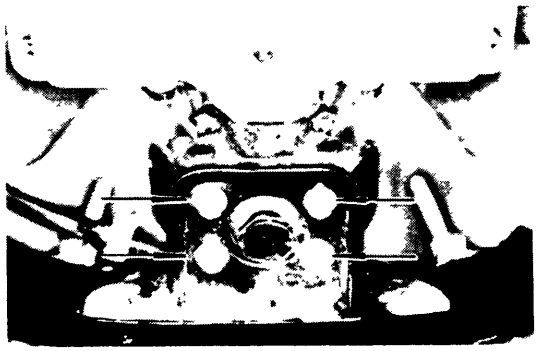

5. **DISCONNECT ENGINE REAR MOUNTING FROM BRACKET**

   Remove four bolts from the bracket.

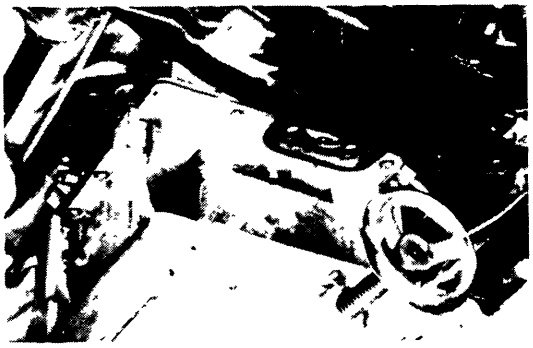

6. **JACK UP TRANSMISSION SLIGHTLY**

   Securely support the transmission on a transmission jack. Lift the transmission slightly to remove weight from the rear support member.

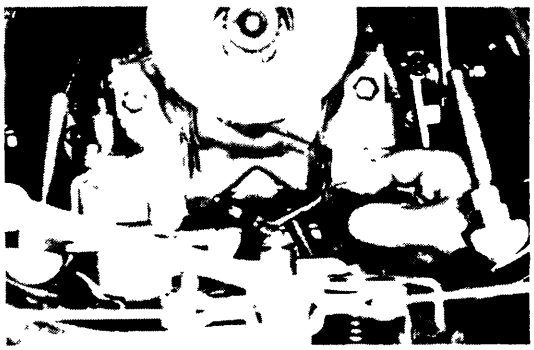

7. **REMOVE ENGINE REAR MOUNTING FROM EXTENTION HOUSING**

   Remove four bolts and the engine rear mounting from the extension housing.



8. REMOVE EXTENSION HOUSING AND GASKET

Remove six bolts. If necessary, tap the extension housing with a plastic hammer to loosen it.

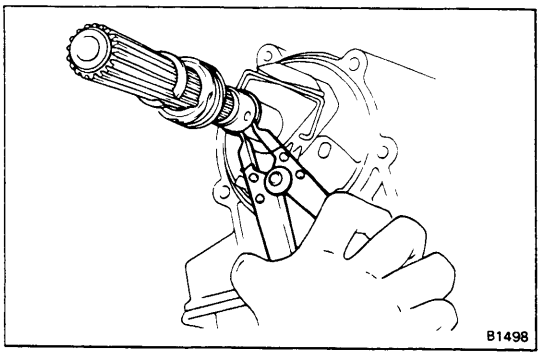

9. REMOVE SPEEDOMETER DRIVE GEAR

(a) Using snap ring pliers, remove the snap ring.

(b) Slide off the speedometer gear.

(c) Remove the lock ball and the other snap ring.

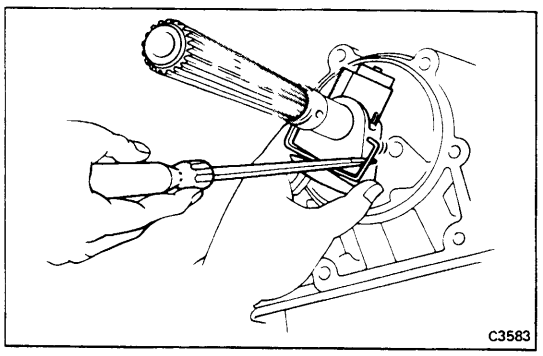

10. REMOVE GOVERNOR FROM OUTPUT SHAFT

(a) Remove the lock plate and bolt.

(b) Using a larger screwdriver, lift the retaining clip on the square side and slide the governor off the shaft.

INSPECTION AND REPAIR OF GOVERNOR ASSEMBLY

(See page AT-91)

INSTALLATION OF GOVERNOR ASSEMBLY

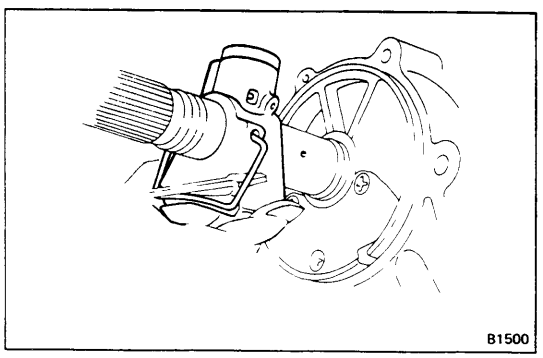

1. INSTALL GOVERNOR ON OUTPUT SHAFT

(a) Using a large screwdriver, lift the retaining clip, and slide the governor body onto the shaft with the retaining clip facing the end of the shaft.

(b) Insert the retaining clip into the hole in the output shaft. Check that the governor assembly is secure.

(c) Install the lock plate and bolt.

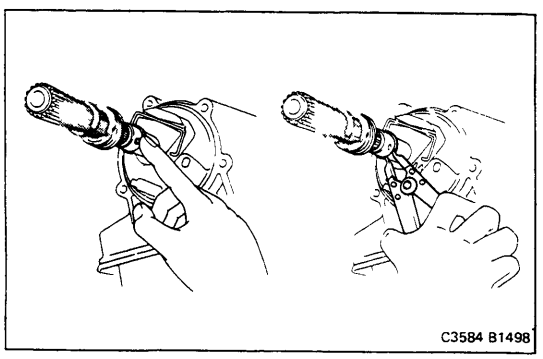

2. INSTALL SPEEDOMETER DRIVE GEAR

(a) Install the snap ring and lock ball.

(b) Slide the speedometer gear on the shaft.

(c) Using snap ring pliers, install the outer snap ring.

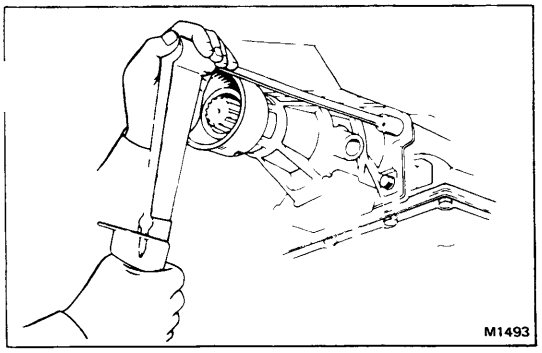

3. **INSTALL NEW GASKET AND EXTENSION HOUSING ON TRANSMISSION**

Install the six bolts finger tight and then torque them.

NOTE: The two lower bolts are shorter.

Torque: 345 kg-cm (25 ft-lb, 34 N·m)



4. **INSTALL ENGINE REAR MOUNTING**

(a) Install the engine rear mounting to the extension housing. Tighten the four bolts.

Torque: 250 kg-cm (18 ft-lb, 25 N·m)

(b) Lower and rest the transmission on the mounting bracket.

(c) Connect the mounting to the bracket. Tighten the four bolts.

Torque: 130 kg-cm (9 ft-lb, 13 N·m)



5. **INSTALL SPEEDOMETER DRIVEN GEAR**

(a) Install a new O-ring on the shaft sleeve.

(b) Install the lock plate with a bolt and washer.

6. **CONNECT SPEEDOMETER CABLE**

Place felt dust protector and washer on the end of the cable. Tighten the collar with pliers.

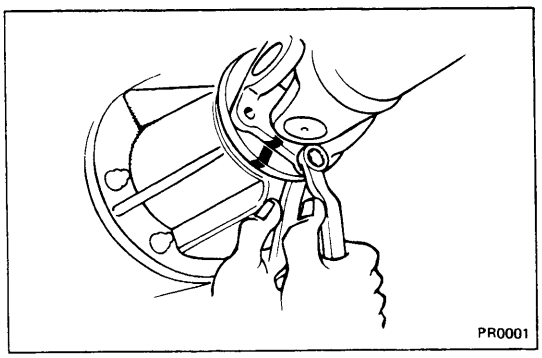

7. **INSTALL PROPELLER SHAFT**

Torque: 750 kg-cm (54 ft-lb, 74 N·m)

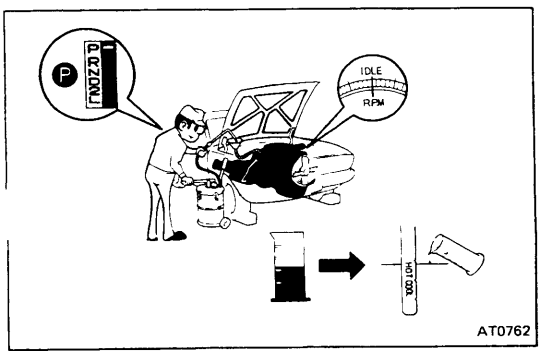

8. **LOWER VEHICLE AND CHECK FLUID LEVEL**

Start the engine, shift the selector into each gear, then check the fluid level with the transmission in "P" range. Add fluid as necessary.

Fluid type: ATF DEXRON II

CAUTION: Do not overfill.

REMOVAL OF TRANSMISSION

1. **DISCONNECT BATTERY CABLE FROM NEGATIVE TERMINAL**

2. **REMOVE AIR CLEANER ASSEMBLY**

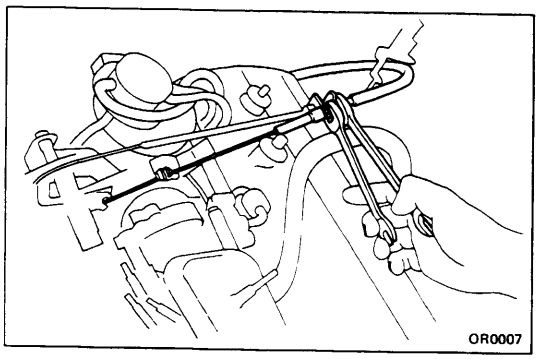

3. **DISCONNECT TRANSMISSION THROTTLE CABLE**
   (a) Loosen the adjusting nuts, and disconnect the cable housing from the bracket.
   (b) Disconnect the cable from the carburetor linkage.

4. **REMOVE UPPER MOUNTING NUT ON STARTER**

5. **RAISE VEHICLE AND DRAIN TRANSMISSION**
   CAUTION: Be sure the vehicle is securely supported.

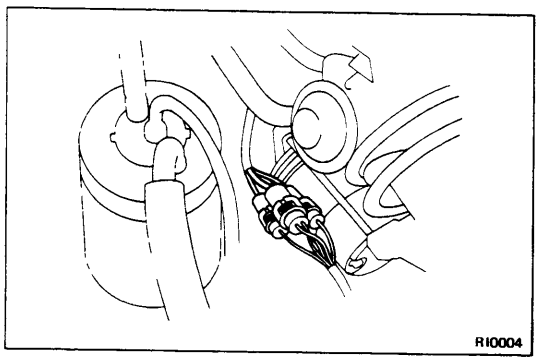

6. **DISCONNECT WIRING CONNECTORS TO SOLENOID, NEUTRAL START AND BACK-UP LIGHT SWITCHES**
   Disconnect the connectors located near the starter.



7. **REMOVE STARTER**
   (a) Remove the lower mounting bolt, and pull the starter toward the front of the vehicle.
   (b) Lay the starter alongside the engine.

8. **REMOVE PROPELLER SHAFT (See page AT-25)**



9. **DISCONNECT SPEEDOMETER CABLE**

10. **DISCONNECT MANUAL SHIFT LINKAGE**
    Disconnect the shift linkage at the rear connection.

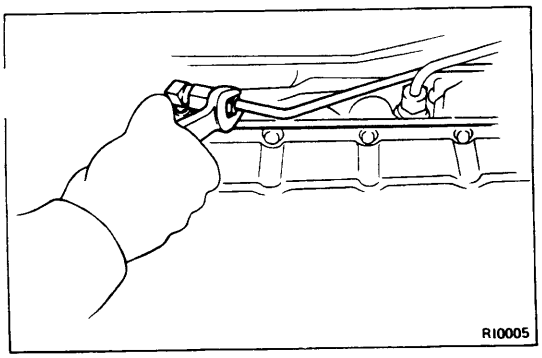

11. DISCONNECT TWO OIL COOLER LINES



12. DISCONNECT EXHAUST PIPE CLAMP AND REMOVE OIL FILLER TUBE



13. JACK UP TRANSMISSION SLIGHTLY

If a transmission jack is not available, be sure to put a wooden block between the jack and the transmission pan to prevent damage.

Raise the transmission enough to remove the weight from the engine rear mounting.

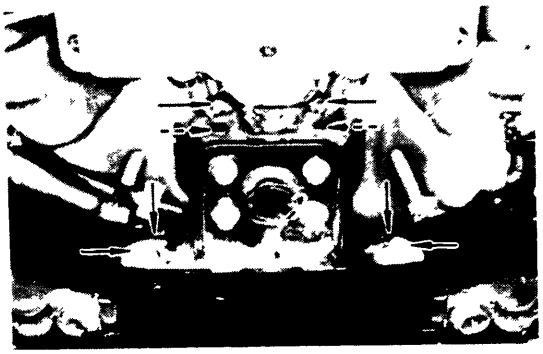

14. REMOVE ENGINE REAR MOUNTING WITH BRACKET

Remove eight bolts and the engine rear mounting with bracket.

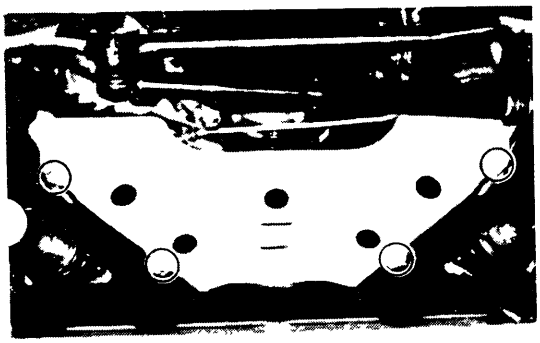

15. REMOVE ENGINE UNDERCOVER

For rotating the engine and torque converter, remove the engine undercover to gain access to the crankshaft pulley.

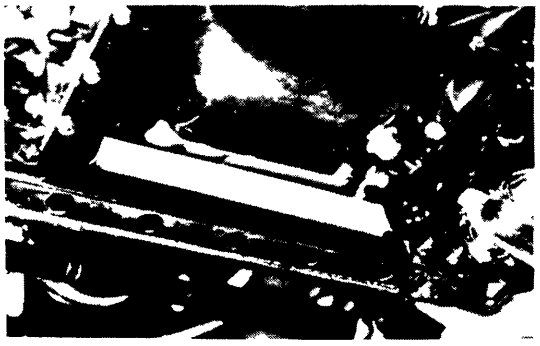

16. INSERT WOODEN PIECE BETWEEN ENGINE OIL PAN AND MEMBER

(a) Insert wooden piece between the engine oil pan and member.

(b) Lower the transmission and rest the engine on the member.

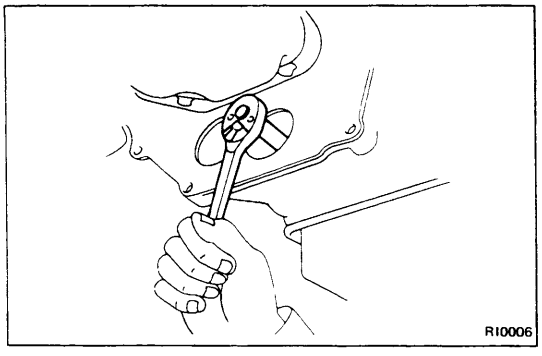

17. REMOVE SIX TORQUE CONVERTER MOUNTING BOLTS

(a) Pry out the service hole covers from the service holes at the rear of the engine.

(b) Turn the crankshaft to gain access to each bolt. Remove the six bolts.

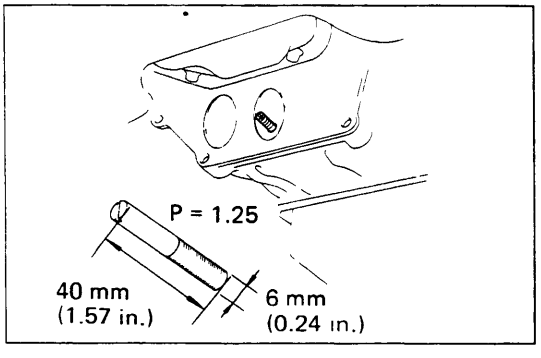

18. INSTALL GUIDE PIN IN TORQUE CONVERTER

Install the guide pin in one of the torque converter bolt holes.

If necessary, a guide pin can be made by cutting off t head of a bolt.

19. REMOVE BOTH SIDE STIFFENER PLATES

20. REMOVE CONVERTER HOUSING MOUNTING BOLTS

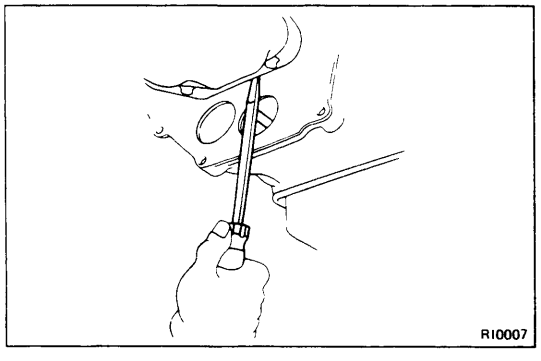

21. PRY ON END OF GUIDE PIN TO BEGIN MOVING TRANSMISSION WITH CONVERTER TOWARD REAR

The guide pin helps keep the converter with the transmission.

22. REMOVE TRANSMISSION ASSEMBLY

(a) Draw out the transmission toward the rear.

(b) Draw down the transmission toward the front.

CAUTION: Do not let the throttle cable or neutral start switch cable catch on anything. Keep the oil pan positioned down.
Be careful not to let the torque converter slide out.

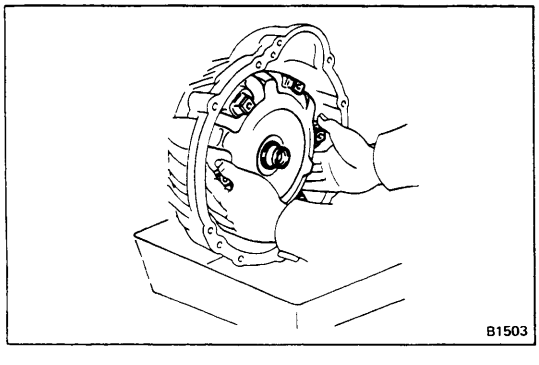

23. PLACE PAN UNDER CONVERTER HOUSING AND REMOVE CONVERTER

Pull the converter straight off, and allow fluid to drain into the pan.

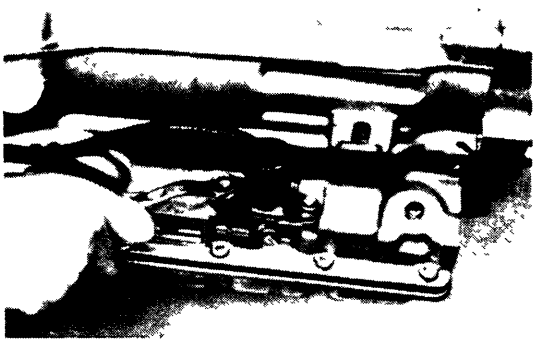

DISASSEMBLY OF TRANSMISSION

SEPARATE BASIC SUBASSEMBLY

1. REMOVE CLAMP FOR WIRING AND THROTTLE CABLE
2. REMOVE SOLENOID AND O-RINGS
3. REMOVE SHIFT HANDLE

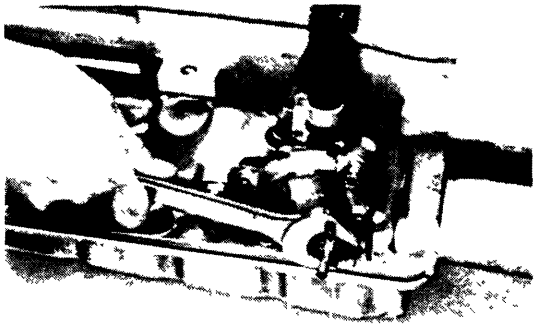

4. REMOVE NEUTRAL START SWITCH

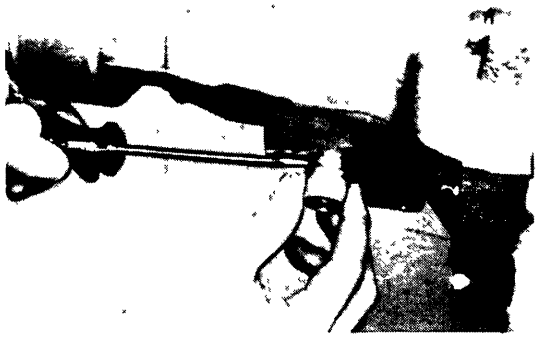

5. REMOVE SPEEDOMETER DRIVEN GEAR

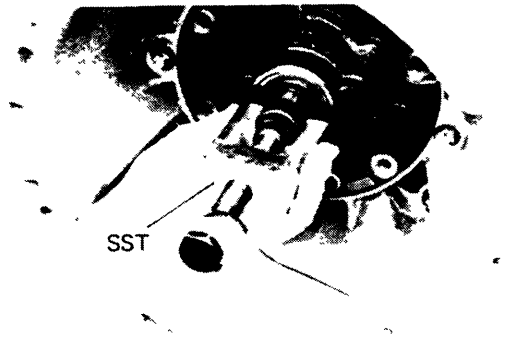

6. REMOVE OIL PUMP
   (a) Remove the seven bolts.
   (b) Position SST on the shaft in back of the spline.

   SST 09610-20012

   CAUTION: Do not damage the shaft bushing surface. Turn the end bolt of SST to free the pump.

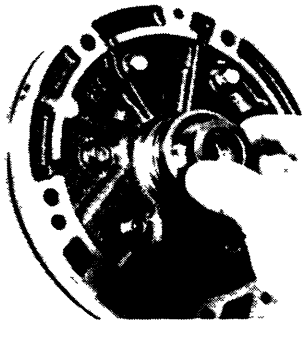

   (c) Grasp the front pump stator shaft and pull the pump from the case.

7. WATCH FOR RACE BEHIND OIL PUMP



8. REMOVE CONVERTER HOUSING

(a) Remove the two 12-mm bolts and four 10-mm bolts.

(b) While holding the input shaft,remove the converter housing.

9. REMOVE EXTENSION HOUSING AND GASKET

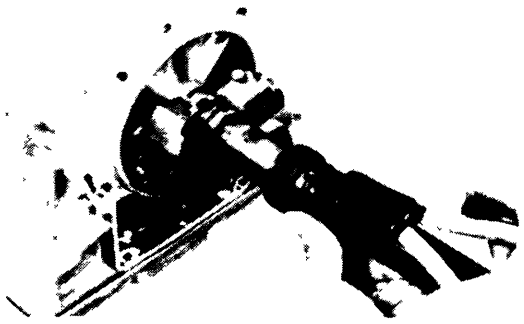

10. REMOVE SPEEDOMETER DRIVE GEAR

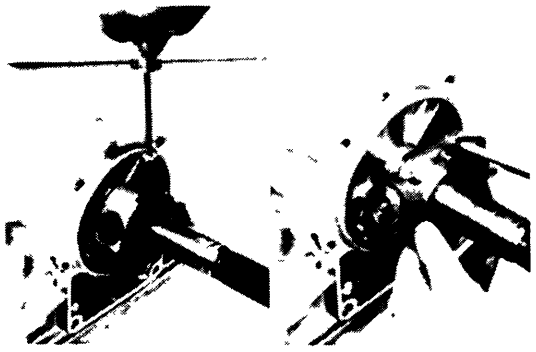

11. REMOVE GOVERNOR BODY FROM OUTPUT SHAFT

(a) Loosen the staked part of the lock plate.

(b) Remove the governor body lock bolt.

(c) While lifting the retaining clip with a large screwdriver, slide off the governor body.

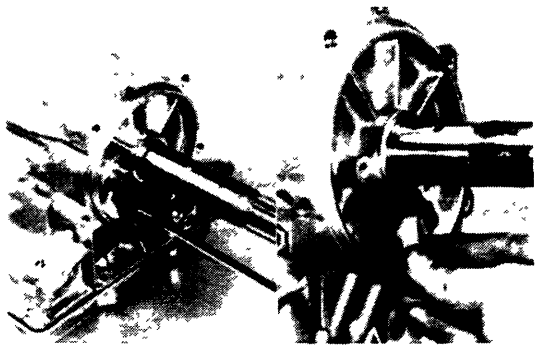

12. IF NECESSARY, REMOVE GOVERNOR STRAINER

(a) Remove the four screws and plate.

(b) Remove the strainer from the case.

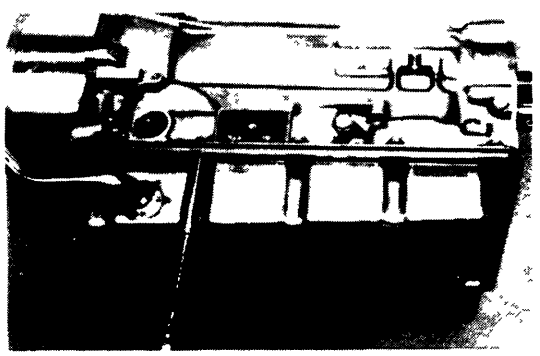

13. REMOVE PAN AND GASKET

(a) Remove the fourteen bolts.

(b) Remove the pan with lifting the transmission case.

CAUTION: Do not turn the transmission over as this will contaminate the valve body with foreign materials in the bottom of the pan.

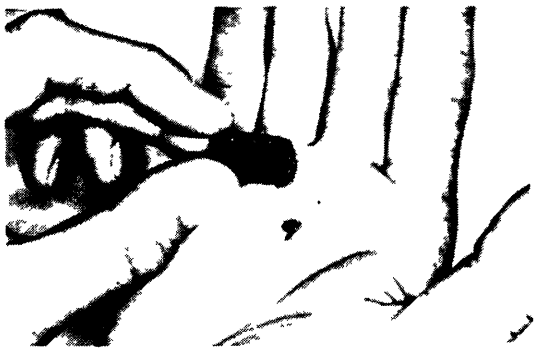

14. EXAMINE PARTICLES IN PAN

Remove the magnets and use it to collect any steel chips. Look carefully at the chips and particles in the pan and on the magnets to anticipate what type of wear you will find in the transmission:

Steel (magnetic) = bearing, gear and clutch plate wear.

Brass (nonmagnetic) = bushing wear.

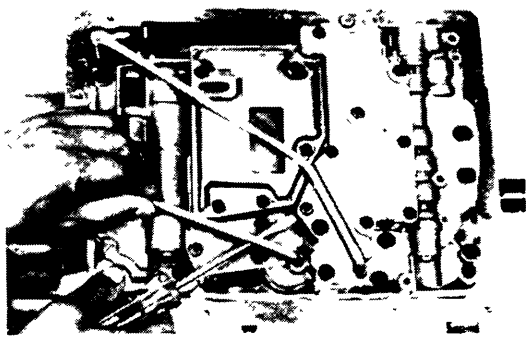

15. TURN TRANSMISSION OVER AND REMOVE TUBES

Pry up both tube ends with a large screwdriver and remove the tubes.

16. REMOVE STRAINER AND GASKET

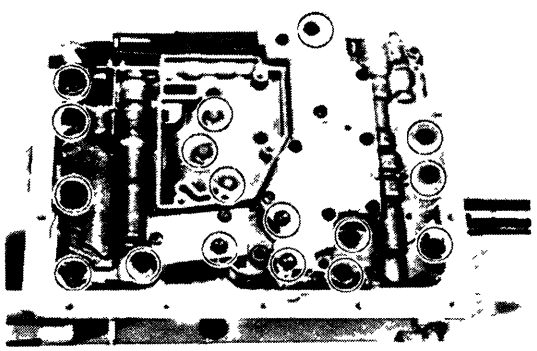

17. REMOVE VALVE BODY

(a) Remove the seventeen bolts.

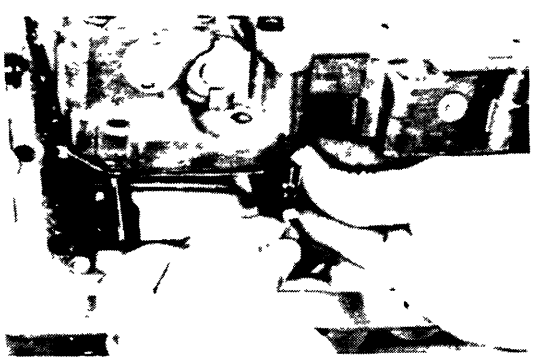

(b) Disconnect the throttle cable from the cam and remove the valve body.

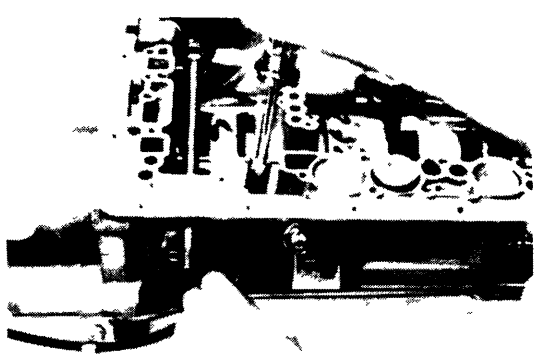

18. REMOVE THROTTLE CABLE AND RETAINER

Using a 10-mm socket, push the plastic throttle cable retainer out of the transmission case.



19. COVER PISTON WITH A RAG AND, REMOVE ACCUMULATOR PISTONS AND SPRINGS

WARNING: Keep face away to avoid injury. Do use regular high-pressure air.

Position a rag to catch each piston. Using low-pressure compressed air (1 kg/cm², 14 psi or 98 kPa, max) pop each pistoon into the rag. Force air into holes shown, and remove the pistons and springs.

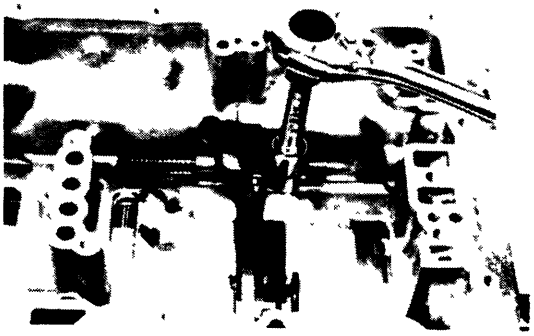

20. REMOVE PARKING LOCK ROD

21. REMOVE SPRING, PIVOT PIN AND PARKING LOCK PAWL

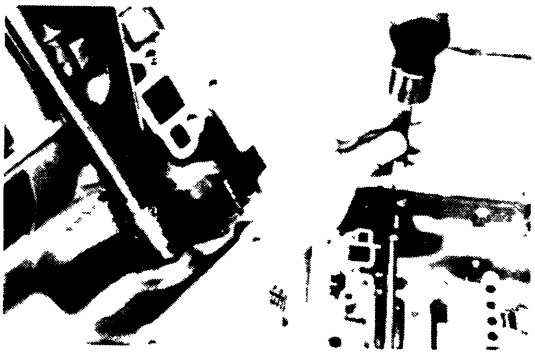

22. IF NECESSARY REMOVE MANUAL LEVER AND SHAFT

(a) Using a hammer and screwdriver, pry and shift the collar.

(b) Using a hammer and punch, drive out the pin.

(c) Slide the shaft out case and remove the detent plate.

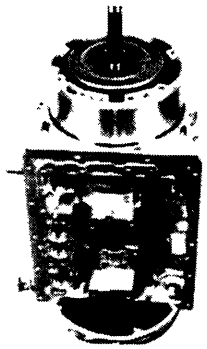

23. PLACE TRANSMISSION CASE ON CYLINDER

Place the transmission on a cylindrical stand for more efficient work.

CAUTION: Place shop rags between the case and stand to avoid damaging the case.

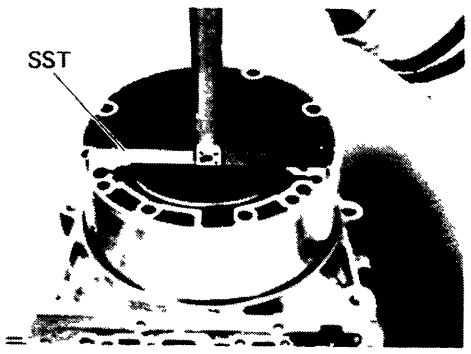

24. MEASURE DISTANCE BETWEEN TOP OF CASE AND CLUTCH DRUM

Set SST on the case as shown in the figure.

SST 09350-20013

Make a note of the distance for reassembly.

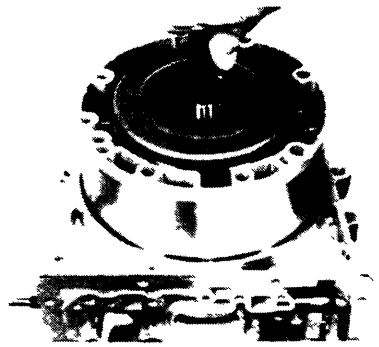

25. REMOVE OVERDRIVE CLUTCH

Grasp the shaft and pull out the overdrive clutch assembly.

Watch for bearings and races on both sides of assembly.

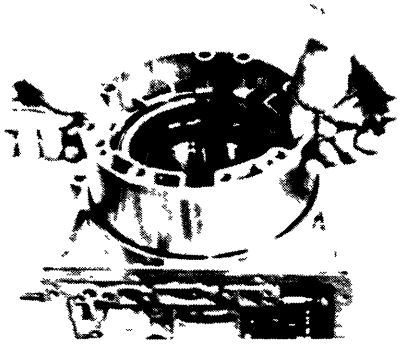

26. REMOVE OVERDRIVE CASE AND BRAKE

Hold both sides of the overdrive case and pull it out from the transmission case. Watch for bearings and races on both sides of the assembly.

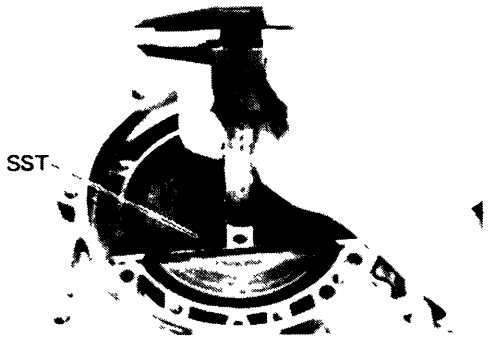

27. MEASURE DISTANCE BETWEEN TOP OF CASE FLANGE AND CLUTCH DRUM

Set SST in the case as shown in the figure.

SST 09350-20013

Make a note of the finding for reassembly.

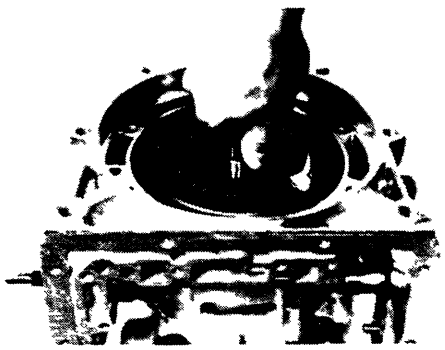

28. REMOVE FRONT CLUTCH AND BEARINGS

Grasp the shaft and pull out the front clutch assembly. Watch for bearings and races on both sides of the assembly.

29. REMOVE BEARING AND RACE

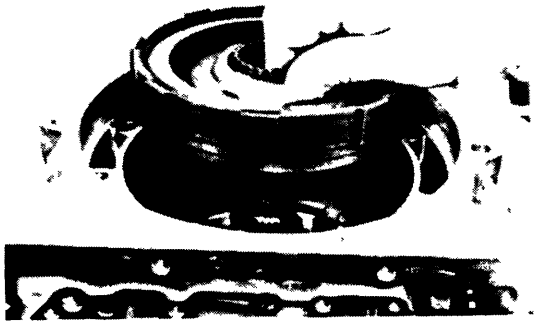

30. REMOVE REAR CLUTCH

Grasp the clutch hub and pull it out from the case.



31. REMOVE CENTER SUPPORT AND SUN GEAR

(a) Remove the two center support bolts.

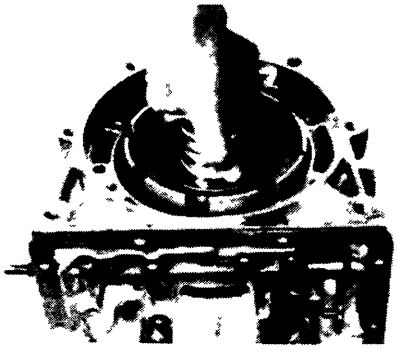

(b) Grasp the assembly and pull out the center support with the sun gear.

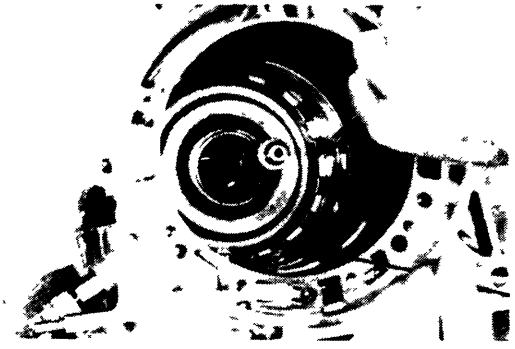

32. REMOVE REACTION PLATE RETAINING RING

Using a long screwdriver, compress the snap ring and then lift it above the groove with a wire hook.

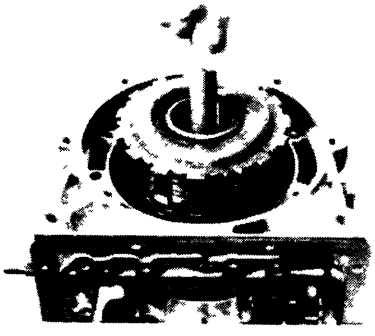

33. REMOVE REAR PARTS GROUP

Grasp the intermediate shaft and pull out the rear parts group.

If the brake apply tube and rear thrust bearing and races do not come out with the assembly, remove them from the case.

34. BASIC DISASSEMBLY IS COMPLETE

The transmission in now in basic component subassemblies. Next, you will disassemble, clean, inspect, repair and assemble each of these component groups.

COMPONENT GROUP DISASSEMBLY, INSPECTION AND ^SSEMBLY

The instructions here are organized so that you work on only one component group at a time. This will help avoid confusion of similar-looking parts from different subassemblies being on your workbench at the same time.
The component groups are inspected and repaired from the converter housing side.

As much as possible, complete the inspection, repair, assembly before proceeding to the next component group. If a component group cannot be assembled because parts are being ordered, be sure to keep all parts of that group in a separate container while proceeding with disassembly, inspection, repair and assembly of other component groups.

GENERAL CLEANING NOTES:

1. All disassembled parts should be washed clean and the fluid passages and holes blown through with compressed air to make sure that they are not clogged.
2. The cleaning solvent used should be the recommended automatic transmission fluid or kerosene.
3. When using compressed air to dry parts, avoid spraying ATF or kerosene in your face.

HANDLING NOTES:

1. After cleaning, the parts should be arranged in proper order to allow performing the inspection, repairs, and reassembly with efficiency.
2. When disassembling a valve body, be sure to keep each valve together with corresponded spring.
3. New brakes and clutches that are to be used for replacement must be soaked in transmission fluid for at least two hours before assembly.

GENERAL ASSEMBLY NOTES:

1. All oil seal rings, clutch discs, clutch plates, rotating parts, and sliding surfaces should be coated with transmission fluid prior to reassembly.
2. All gaskets and rubber O-rings should be replaced.
3. Make sure that the ends of a snap ring are not aligned with one of the cutouts and are installed in the groove correctly.
4. If a worn bushing is to be replaced, the replacement must be made with the subassembly containing that bushing.
5. Check thrust bearings and races for wear or damage. Replace if necessary.
6. Use petroleum jelly to keep parts in their places.

Oil Pump

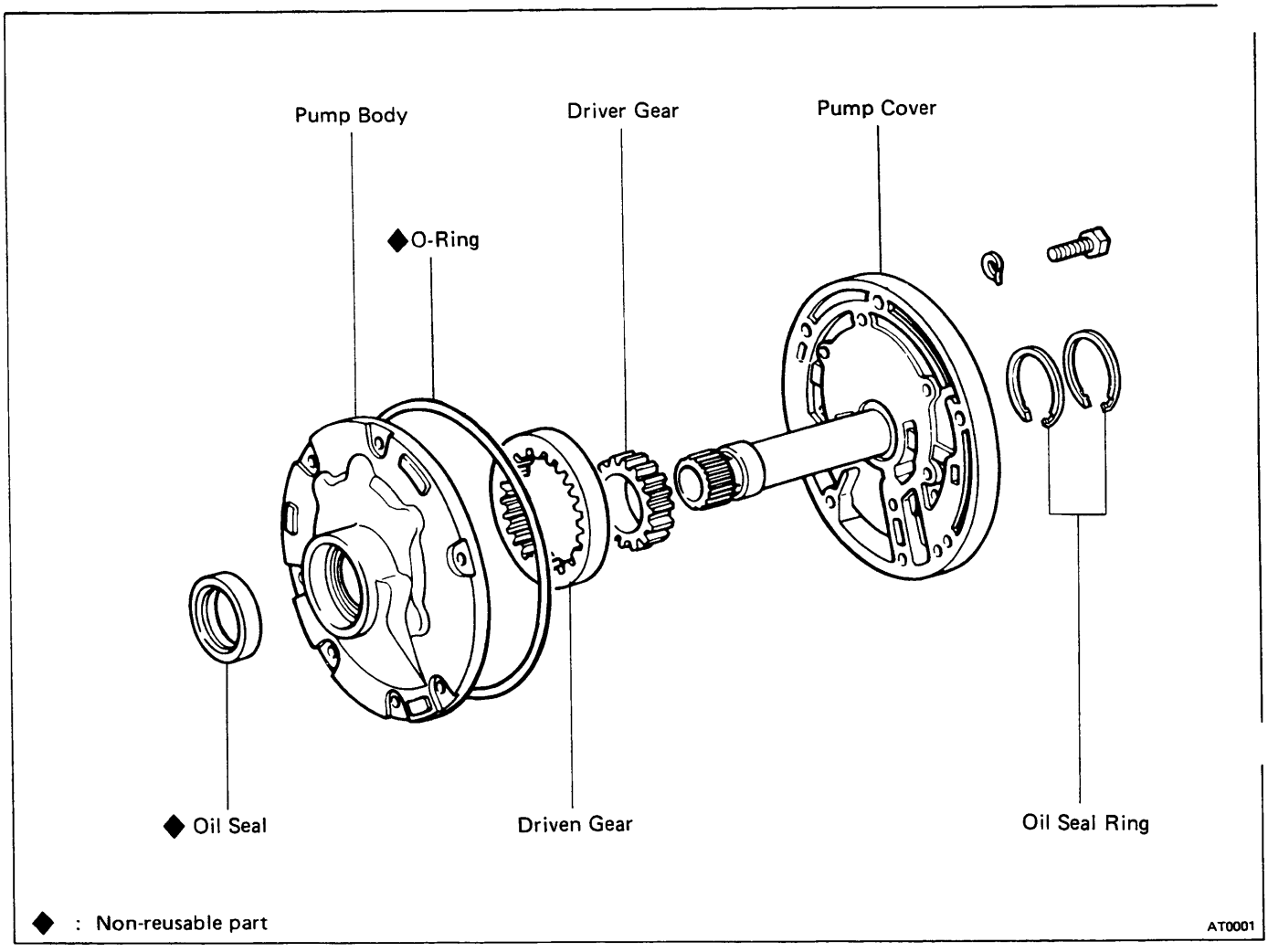

DISASSEMBLY OF OIL PUMP

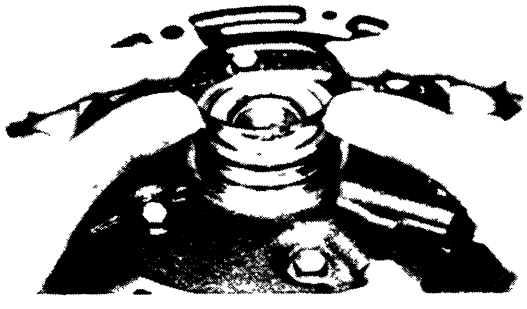

1. **USE TORQUE CONVERTER AS WORK STAND**
2. **REMOVE TWO OIL SEAL RINGS FROM PUMP COVER**

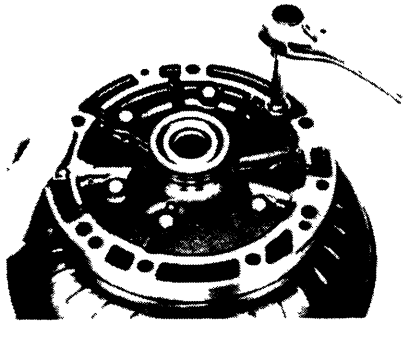

3. **REMOVE PUMP COVER**
   (a) Remove the six bolts.
   (b) Remove the pump cover.
4. **REMOVE O-RING FROM PUMP**
5. **LIFT PUMP OFF CONVERTER AND REMOVE OIL PUMP DRIVE GEAR AND DRIVEN GEAR**
   Identify the top and bottom and keep them in assembly order.

INSPECTION OF OIL PUMP

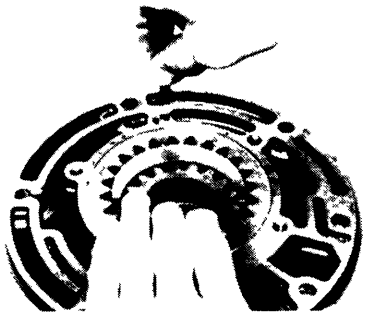

1. CHECK BODY CLEARANCE OF DRIVEN GEAR

Push the driven gear to one side of the body. Using a feeler gauge, measure the clearance.

Standard body clearance: **0.07 — 0.15 mm (0.0028 — 0.0059 in.)**
Maximum body clearance: **0.3 mm (0.012 in.)**

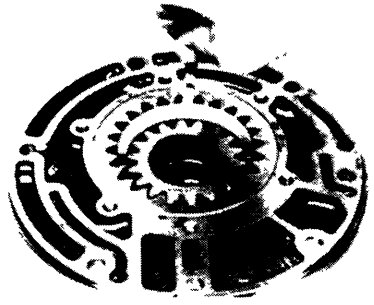

2. CHECK TIP CLEARANCE OF BOTH GEARS

Measure between the gear teeth and the cresent-shaped part of the pump body.

Standard tip clearance: **0.11 — 0.14 mm (0.0043 — 0.0055 in.)**
Maximum tip clearance: **0.3 mm (0.012 in.)**



3. CHECK SIDE CLEARANCE OF BOTH GEARS

Using a steel straightedge and a feeler gauge, measure the side clearance of both gears.

Standard side clearance: **0.02 — 0.05 mm (0.0008 — 0.0020 in.)**
Maximum side clearance: **0.1 mm (0.004 in.)**

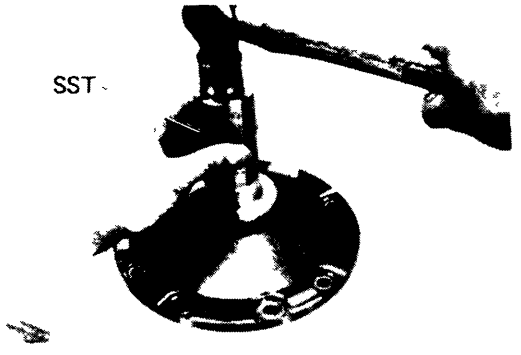

4. INSPECT FRONT OIL SEAL

Check for wear, damage or cracks

If necessary, replace the oil seal as follows.

(a) Pry off the oil seal with a screwdriver.

(b) Using SST and a hammer, install a new oil seal. The seal end should be flush with outer edge of pump body.

SST 09350-20013

ASSEMBLY OF OIL PUMP

(See page AT-36)

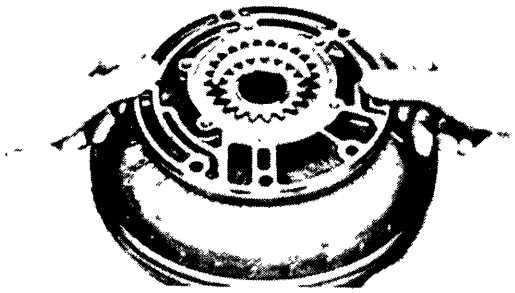

1. **INSTALL DRIVEN GEAR AND DRIVE GEAR AND SET PUMP BODY ON TORQUE CONVERTER**

   Make sure the tops of the gears are facing up ward.

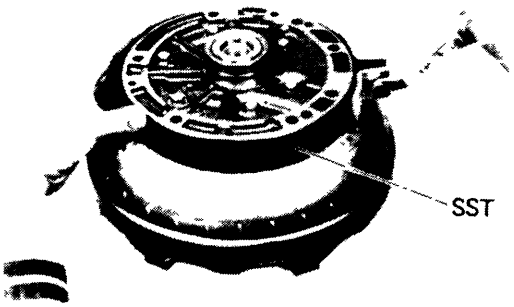

2. **LOOSELY INSTALL PUMP COVER**

   Align the bolt holes and drop the pump cover into place.
   Install the six bolts with wave washers finger tight.

3. **ALIGN PUMP BODY AND PUMP COVER**

   Install the SST around the body and cover.
   Tighten SST to align the body and cover.

   SST 09350-20013

4. **TIGHTEN SIX PUMP COVER BOLTS**

   Torque: 75 kg-cm (65 in.-lb, 7.4 N·m)

5. **REMOVE SST**

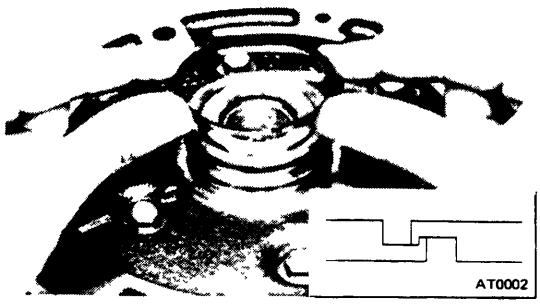

6. **INSTALL TWO OIL SEAL RINGS ON PUMP COVER**

   Spread apart and slide them into the groove.
   Hook both ends by hand.
   Wipe off excess petroleum jelly.

7. **INSTALL NEW O-RING ON PUMP**

   Make sure the O-ring is not twisted and is fully seated in the groove.

8. **CHECK DRIVE GEAR ROTATION**

   Turn the drive gear with a screwdriver and make sure it rotates smoothly.

   CAUTION: Do not damage the oil seal lip.

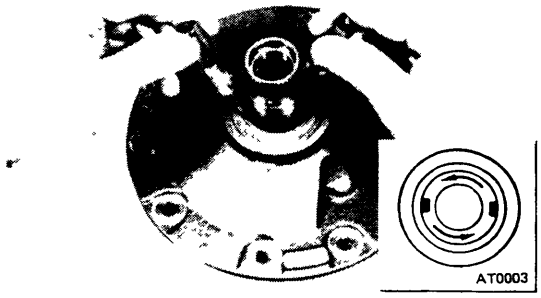

Overdrive Input Shaft and Clutch

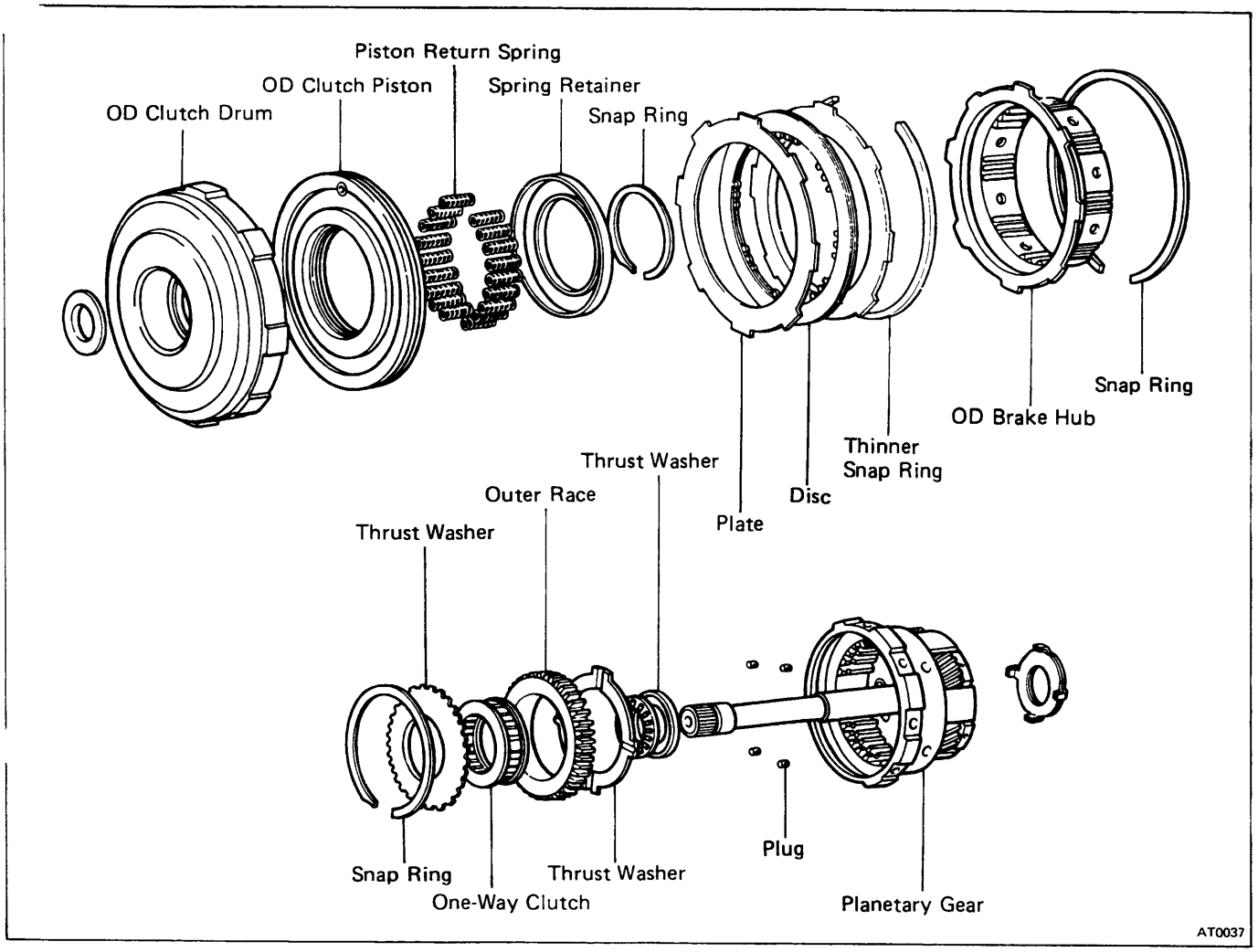

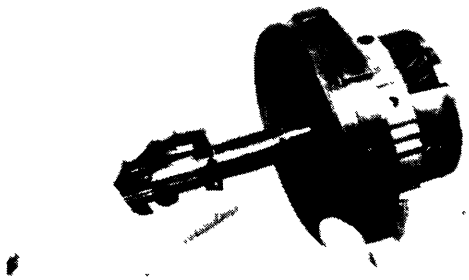

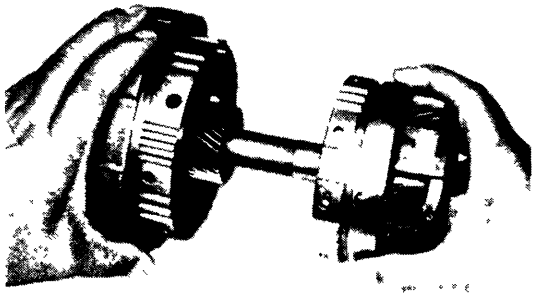

DISASSEMBLY OF OVERDRIVE INPUT SHAFT AND CLUTCH

1. **REMOVE THRUST BEARINGS AND RACES FROM OVERDRIVE INPUT SHAFT**
   (a) Slide off the thrust bearing and race from the clutch side by hand. Note the position of the races.
   (b) Using a screwdriver, pry off the thrust washer from the planetary gear side.

2. **PULL OVERDRIVE CLUTCH ASSEMBLY FROM INPUT SHAFT**
   CAUTION: Be careful that the thrust bearing and race do not fall out.

3. **REMOVE THRUST BEARING AND RACE**
   Note the position of the race.

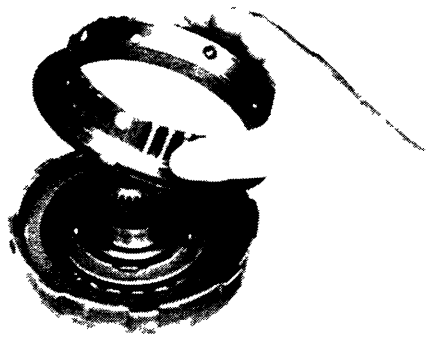

4. **REMOVE SNAP RING AND HUB FROM OVERDRIVE CLUTCH ASSEMBLY**

5. **REMOVE THINNER SNAP RING, FLANGE, DISC AND PLATE**

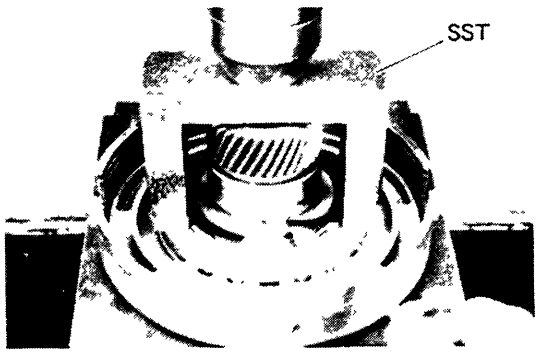

6. **COMPRESS PISTON RETURN SPRINGS AND REMOVE SNAP RING**

   Place SST on the spring retainer and compress springs with a shop press. Using a screwdriver, remove the snap ring.

   SST 09350-20013

7. **REMOVE SPRING RETAINER AND EIGHTEEN SPRINGS**

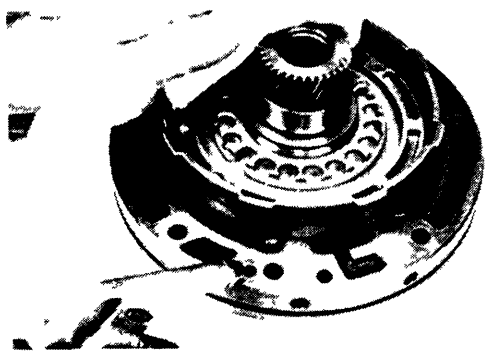

8. **ASSEMBLE OVERDRIVE CLUTCH ON OIL PUMP AND BLOW OUT PISTON**
   (a) Slide the overdrive clutch onto the oil pump.
   (b) Apply compressed air to the oil pump to remove piston.
   (If the piston does not come out completely, use needle nose pliers to remove it.)
   (c) Remove the overdrive clutch from the oil pump.

9. **REMOVE CLUTCH PISTON O-RINGS**

10. **REMOVE SNAP RING FROM OVERDRIVE PLANETARY GEAR ASSEMBLY**

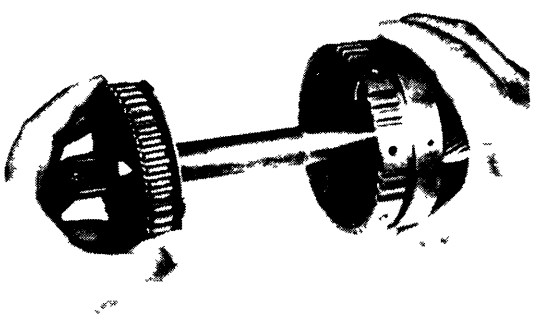

11. **REMOVE THRUST WASHERS AND ONE-WAY CLUTCH FROM PLANETARY GEAR ASSEMBLY**

    CAUTION: Be careful not to lose the four plugs.

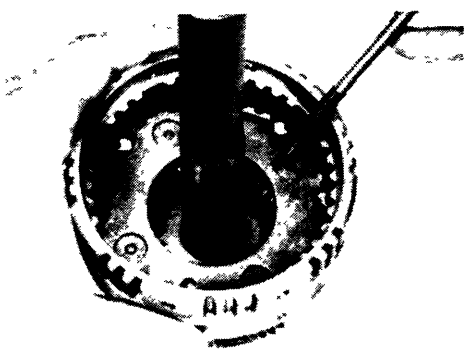

12. **REMOVE FOUR PLUGS BY MAGNET FINGER**

    CAUTION: Keep the four plugs together to prevent losing them.

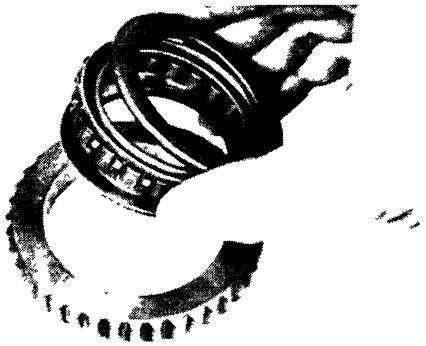

13. REMOVE ONE-WAY CLUTCH FROM OUTER RACE

Note the direction of the one-way clutch.

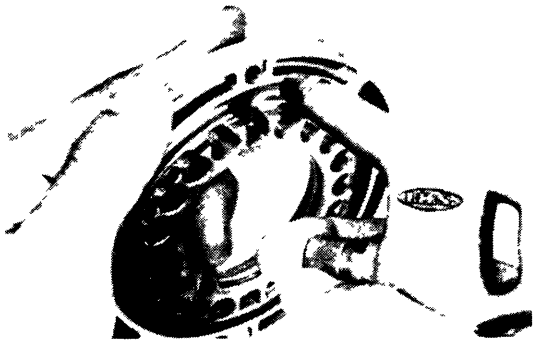

INSPECTION OF OVERDRIVE INPUT SHAFT AND CLUTCH

1. INSPECT CLUTCH PISTON

(a) Check that the check ball is free by shaking the piston.

(b) Check that the valve does not leak by applying low-pressure compressed air.

2. PARTS HOLDING NOTE:

Do not allow the discs to dry out.
Prepare new discs by soaking them at least two hours in ATF.

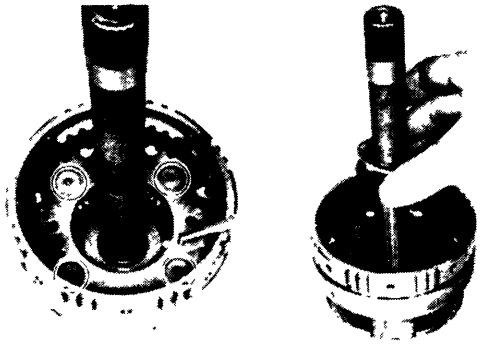

ASSEMBLY OF OVERDRIVE INPUT SHAFT AND CLUTCH

(See page AT-39)

1. INSTALL FOUR PLUGS

2. INSTALL THRUST WASHER AND BEARING

(a) Coat parts with petroleum jelly to keep them in place.

(b) Slip on the bearing and then the thrust washer facing the lip outward.

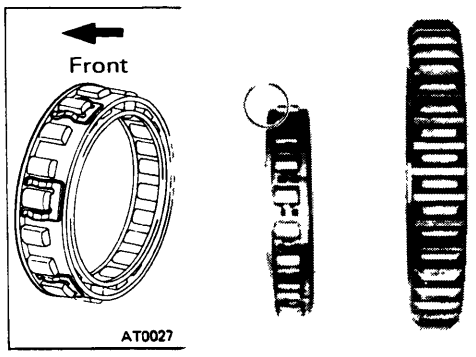

3. INSTALL ONE-WAY CLUTCH

(a) Install the one-way clutch into the outer race.

(b) Install the retainer on both sides of the one-way clutch.

NOTE: Remember that the spring cage side of the one-way clutch faces toward the front of the transmission.

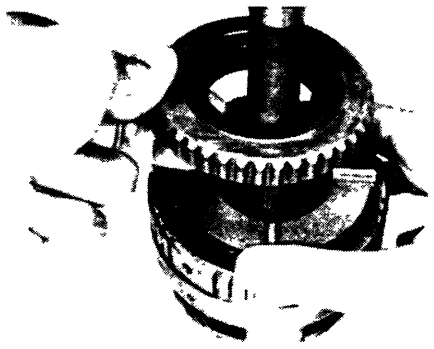

4. INSTALL THRUST WASHER AND ONE-WAY CLUTCH

(a) Install the thrust washer, facing the grooves upward.

(b) Install the one-way clutch in correct direction.

(c) Install the thrust washer.

(d) Install the snap ring.

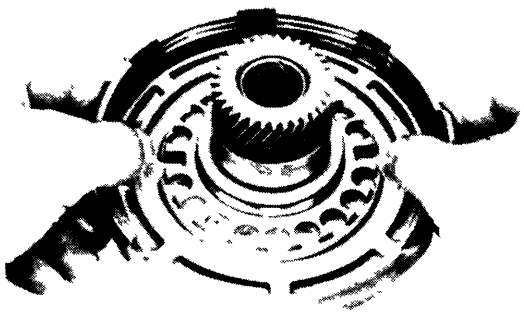

5. INSTALL CLUTCH PISTON IN OVERDRIVE CLUTCH DRUM

(a) Install a new O-ring on the piston. Coat the O-ring with ATF.

(b) Press piston into the drum with the side up, being careful not to damage the O-ring.

6. INSTALL EIGHTEEN PISTON RETURN SPRINGS AND SET RETAINER AND SNAP RING IN PLACE

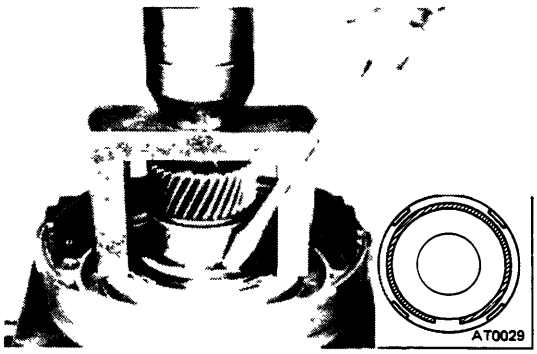

7. COMPRESS RETURN SPRINGS AND INSTALL SNAP RING IN GROOVE

(a) Place SST on the spring retainer, and compress the springs on shop press.

SST 09350-20013

(b) Install the snap ring with a screwdriver.
Be sure the end gap of the snap ring is not aligned with the spring retainer claw.

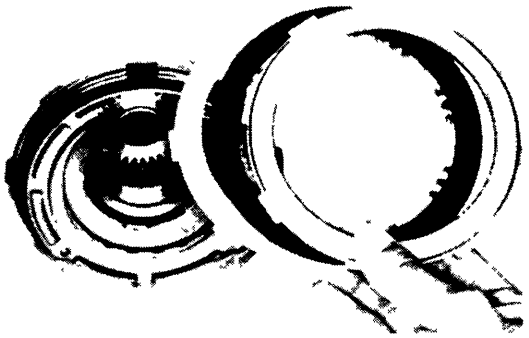

8. INSTALL PLATE, DISC AND FLANGE

(a) Using low-pressure compressed air, blow all excess ATF from the disc.

CAUTION: High-pressure air will damage the disc.

(b) Install in order: Plate-disc-flange (flat end down)



9. INSTALL THINNER SNAP RING IN OVERDRIVE CLUTCH DRUM

Compress and lower the snap ring into the groove by hand. Check that the ends of the snap ring are not aligned with one of the cutouts.

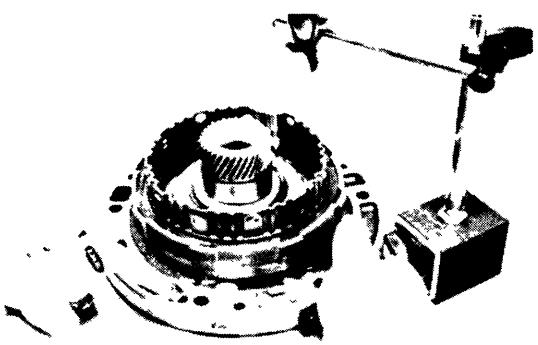

10. CHECK PISTON STROKE OF OVERDRIVE CLUTCH

(a) Install the overdrive clutch hub and outer snap ring.

(b) Install the front clutch drum onto the oil pump body. Using a dial indicator, measure the stroke applying and releasing the compressed air (4—8 kg/cm², 57—114 psi or 392—785 kPa) as shown.

Standard piston stroke: 1.47—2.28 mm (0.0579—0.0898 in.)

If stroke exceeds the limit, the clutch pack is probably worn. If the stroke is less than the limit, parts may be misassembled or there may be excess ATF on the discs.

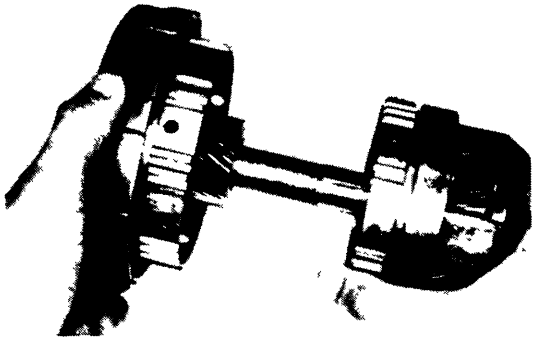

11. ASSEMBLE OVERDRIVE CLUTCH DRUM AND OVERDRIVE PLANETARY GEAR

Mesh the hub with the disc, twisting and jiggling the hub as required.

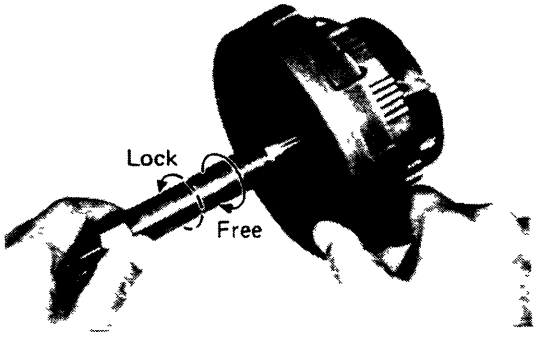

12. CHECK OPERATION OF ONE-WAY CLUTCH

Hold the clutch drum and turn the input shaft. The input shaft should turn freely clockwise and should lock counterclockwise.

13. KEEP THRUST WASHER, THRUST BEARINGS AND RACE TOGETHER

Overdrive Case and Brake

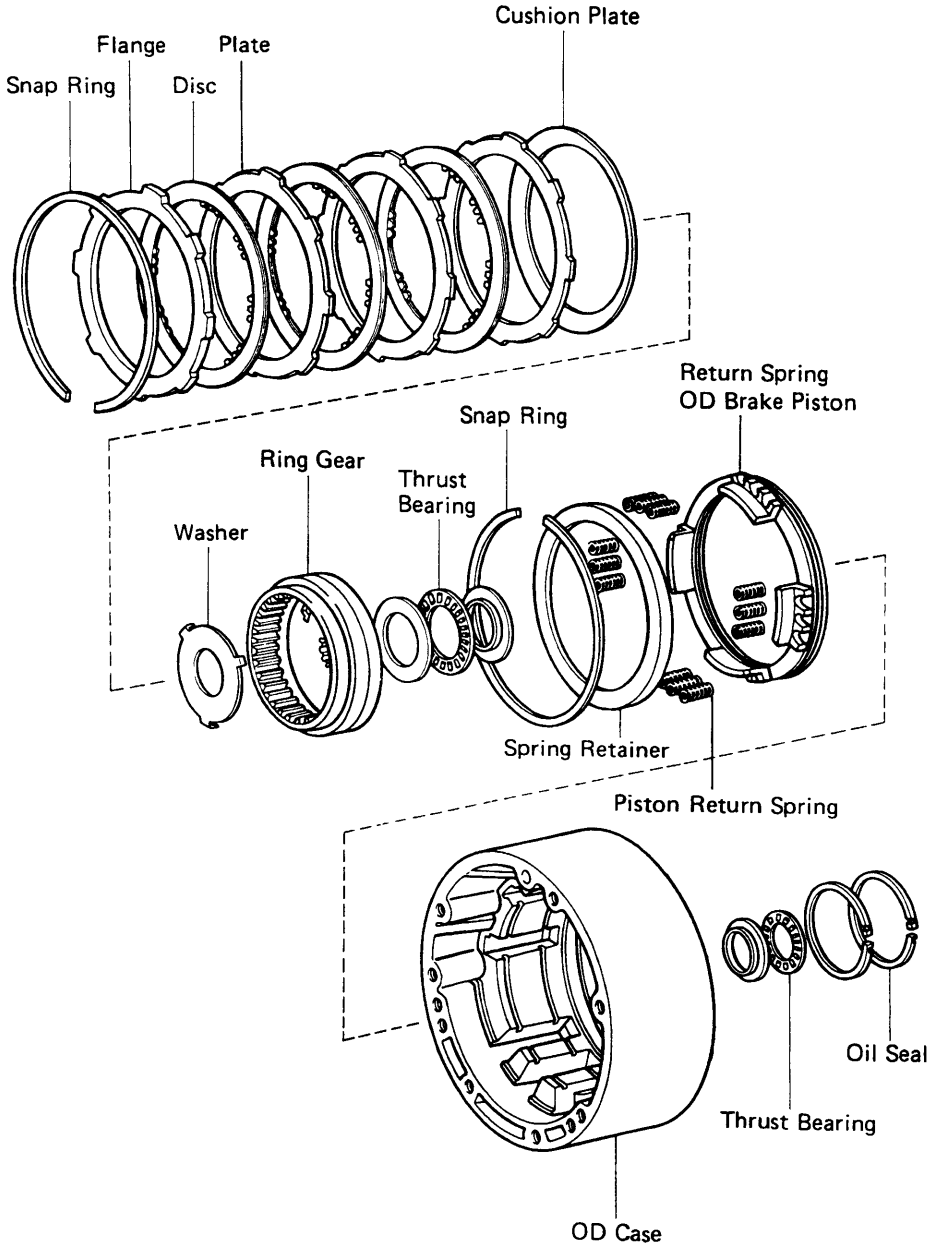

AT0018

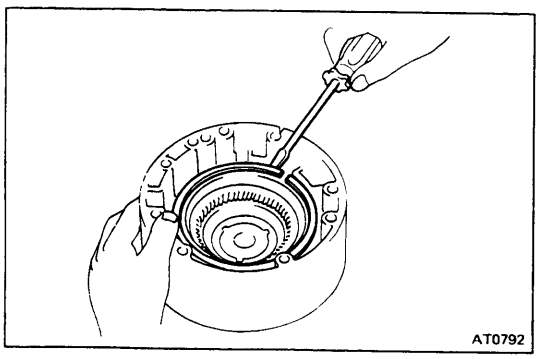

AT0792

DISASSEMBLY OF OVERDRIVE CASE AND BRAKE

1. **REMOVE OUTER SNAP RING FROM OVERDRIVE CASE**
2. **REMOVE CLUTCH FLANGE, DISCS PLATES AND CUSHION PLATE**
3. **REMOVE RING GEAR AND THRUST WASHER**

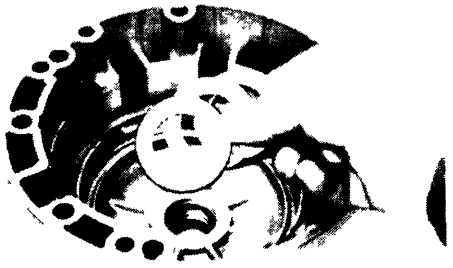

4. **REMOVE THRUST BEARING AND RACES FROM OVERDRIVE CASE**

   Note the position of the races.

5. **REMOVE SNAP RING, SPRING RETAINER AND RETURN SPRINGS**



6. **REMOVE BRAKE PISTON**

   Blow compressed air through the case hole indicated in the figure to pop out the brake piston.

   If piston does not pop out, lift it out with needle-nose pliers.

7. **REMOVE TWO OIL SEAL RINGS FROM OVERDRIVE CASE**

8. **REMOVE O-RINGS FROM PISTON**

INSPECTION OF OVERDRIVE CASE AND BRAKE

NOTE: Do not allow the discs to dry out.

Prepare new discs by soaking them at least two hours in ATF.

ASSEMBLY OF OVERDRIVE CASE AND BRAKE

(See page AT-44)

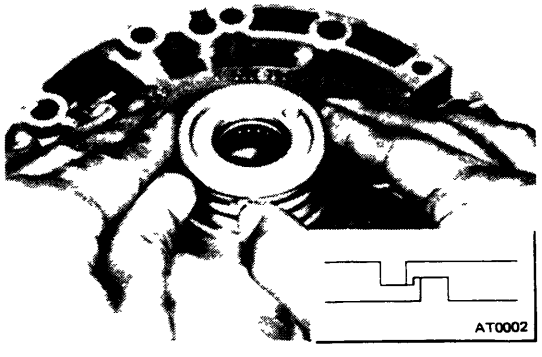

1. **INSTALL TWO OIL SEAL RINGS ON OVERDRIVE CASE**

   Spread apart and slide them into the groove. Hook both ends by hand.

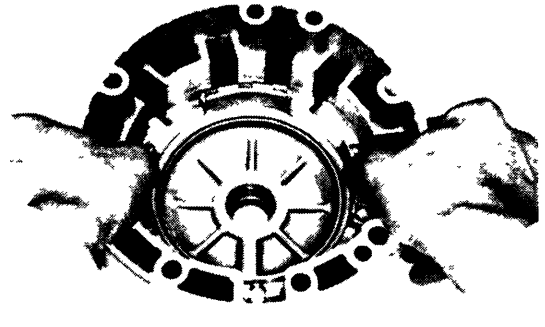

2. **INSTALL NEW O-RINGS ON PISTON**

3. **INSTALL BRAKE PISTON IN OVERDRIVE CASE**

   Install the piston with the cup side up, being careful not to damage the O-rings.

4. **INSTALL RETURN SPRINGS AND SET RETAINER AND SNAP RING IN PLACE**

   Check that the ends of the snap ring are not aligned with one of the cutouts.



5. INSTALL THRUST BEARING AND RACES TO RING GEAR AND SET RING GEAR IN OVERDRIVE CASE

NOTE: Make sure that the races are installed in the correct direction.

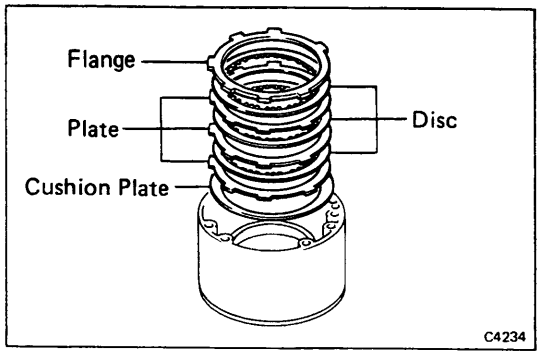

6. INSTALL CUSHION PLATE, DISCS, PLATES AND FLANGE

Using low-pressure compressed air, blow all excess ATF from the discs.

CAUTION: High-pressure air will damage the discs.

Install in order: Cushion plate (rounded end down)-plate-disc-plate-disc-plate-disc-flange (flat end down)

7. INSTALL SNAP RING

Check that the ends of the snap ring are not aligned with one of the cutouts.



8. MEASURE BRAKE CLEARANCE

Measure the distance between snap ring and flange.

Standard clearance: 0.65 — 2.21 mm (0.0256 — 0.0870 in.)



9. INSTALL WASHER ONTO RING GEAR

Front Clutch

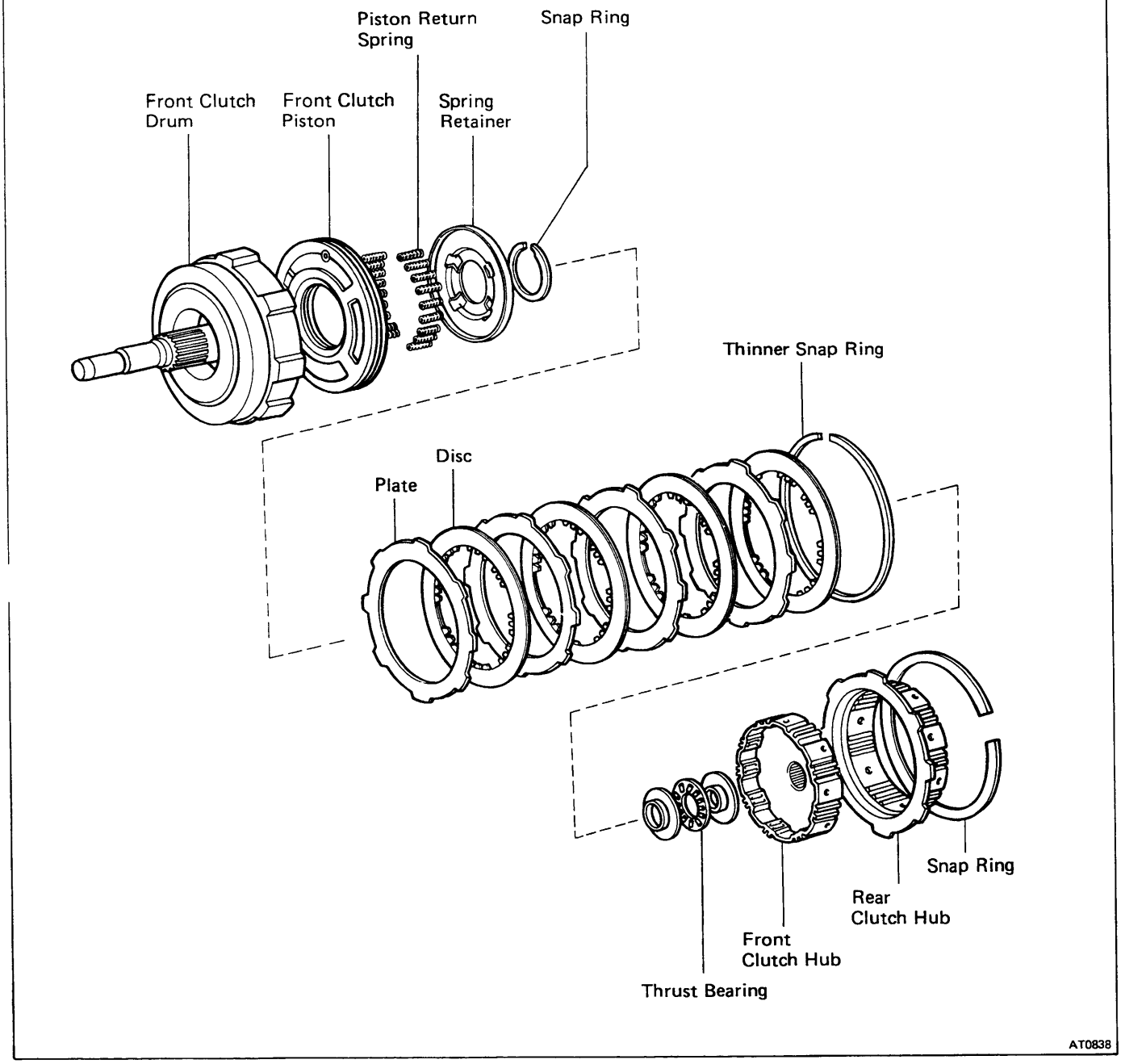

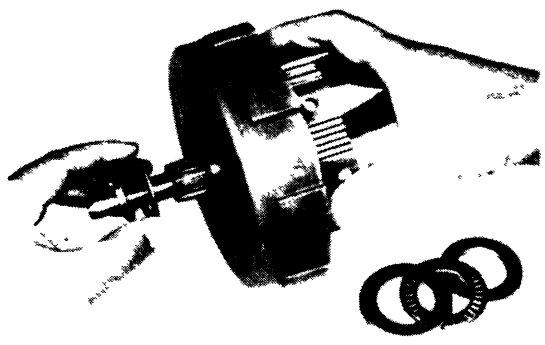

DISASSEMBLY OF FRONT CLUTCH

1. **REMOVE THRUST BEARING AND RACES FROM BOTH SIDES OF CLUTCH**

   Note the position of the races.



2. **USE EXTENSION HOUSING AS WORK STAND**
3. **REMOVE SNAP RING FROM FRONT CLUTCH DRUM**
4. **REMOVE FRONT AND REAR CLUTCH HUB**
   Lift out the two clutch hubs together.



5. **REMOVE THRUST BEARING AND RACES**
   Note the position of the races.
6. **REMOVE DISC**



7. **REMOVE THINNER SNAP RING**
8. **REMOVE REMAINING CLUTCH PLATES AND DISCS**



9. **COMPRESS PISTON RETURN SPRINGS AND REMOVE SNAP RING**
   Place SST on the spring retainer and compress the springs with a shop press.
   Using a screwdriver, remove the snap ring.
   SST 09350-20013
10. **REMOVE SPRING RETAINER AND EIGHTEEN SPRINGS**

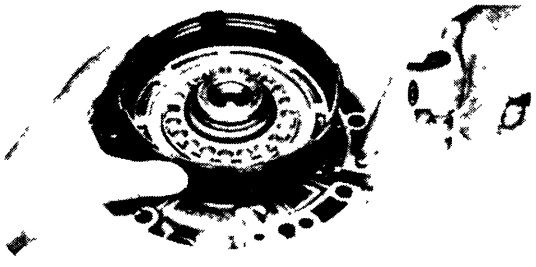

11. **ASSEMBLE FRONT CLUTCH ON OVERDRIVE CASE AND BLOW PISTON**
    (a) Slide the front clutch onto the overdrive case.
    (b) Apply compressed air to the overdrive case to remove the piston. (If piston does not come out completely, use pliers to remove it.)
    (c) Remove the front clutch from the overdrive case.
12. **REMOVE O-RINGS FROM PISTON**

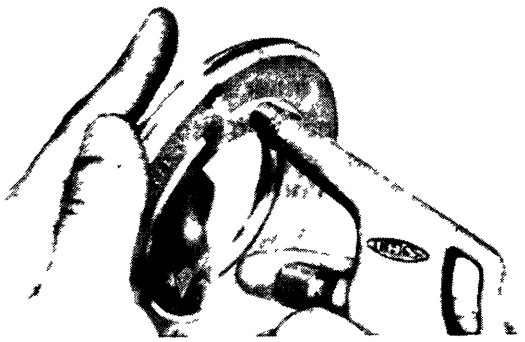

INSPECTION OF FRONT CLUTCH

INSPECT FRONT CLUTCH PISTON

(a) Check that check ball is free by shaking the piston.

(b) Check that the valve does not leak by applying low-pressure compressed air.

NOTE: Do not allow the discs to dry out. Prepare new discs by soaking them at least two hours in ATF.

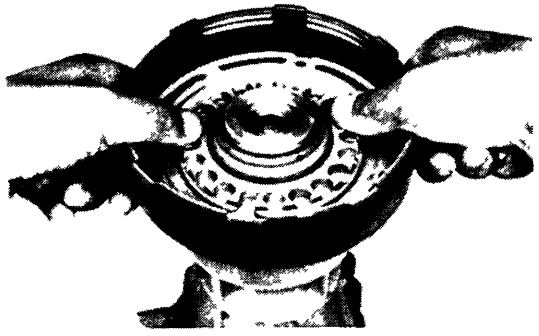

ASSEMBLY OF FRONT CLUTCH

(See page AT-47)

1. **INSTALL NEW O-RINGS ON PISTON**

2. **INSTALL PISTON IN FRONT CLUTCH DRUM**

Press the piston into the housing with the cup side up (check ball down).

Be careful not to damage the O-rings.

3. **INSTALL EIGHTEEN PISTON RETURN SPRINGS, SPRING RETAINER AND SNAP RING IN PLACE**

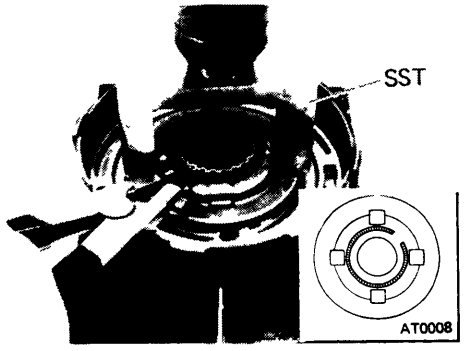

4. **COMPRESS RETURN SPRINGS AND INSTALL SNAP RING IN GROOVE**

(a) Place SST on the spring retainer, and compress the spring on a shop press.

SST 09350-20013

(b) Install the snap ring with a screwdriver.
Be sure the end gap of the snap ring is not aligned with the spring retainer claw.

5. **INSTALL DISCS AND PLATES WITHOUT ASSEMBLING THINNER SNAP RING**

(a) Do not assemble the thinner snap ring yet.

(b) Using low-pressure compressed air, blow all excess ATF from the discs. For measurement of the clutch pack, install all plates and discs (temporarily without thinner snap ring):

CAUTION: High-pressure air will damage the discs.

Install in order: Plate-disc-plate-disc-plate-disc-plate-(no snap ring)-disc

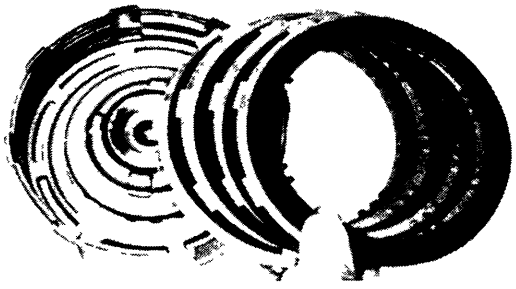

6. **CHECK PISTON STROKE OF FRONT CLUTCH**

(a) Install the rear clutch hub and outer snap ring.

(b) Install the front clutch drum onto the overdrive case. Using a dial indicator, measure the stroke applying and releasing the compressed air (4 — 8 Kg/cm², 57 — 114 psi or 392 — 785 kPa).

Standard piston stroke: 1.32—2.66 mm (0.0520 — 0.1047 in.)



If the stroke exceeds the limit, the clutch pack is probably worn. If stroke is less than the limit, parts may be misassembled or there may be excess ATF on the discs.

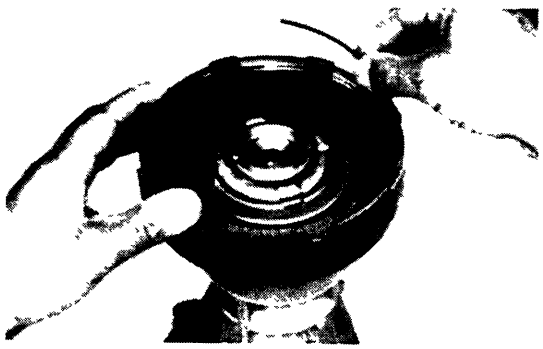

7. INSTALL THINNER SNAP RING IN CLUTCH DRUM

(a) Remove the snap ring, rear clutch hub and one disc to allow installation of the inner shap ring.

(b) Compress and lower the snap ring into the groove by hand. Check that the ends of the snap ring are not aligned with one of the cutouts.

8. INSTALL DISC



9. INSTALL INNER THRUST BEARING AND RACES

IMPORTANT: Coat parts with petroleum jelly to keep them in place.

Install the inner race, needle bearing and outer race. Press them into place.

NOTE: Face the lip of race toward the front clutch body.



10. INSTALL FRONT CLUTCH HUB

Align the disc lugs with the hub teeth. Make sure the hub meshes with all the discs and is fully inserted.

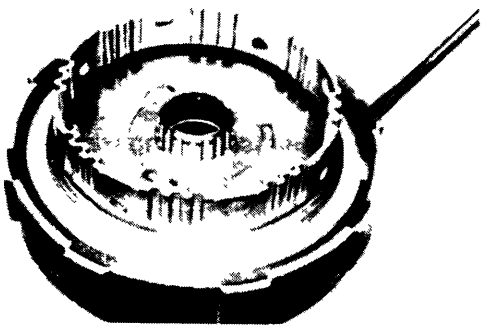

11. INSTALL REAR CLUTCH HUB AND OUTER SNAP RING

Check that the snap ring ends are not aligned with one the cutouts.

NOTE: Note the position of the thrust bearing and races, and keep them together until assembly.

12. KEEP THRUST BEARINGS AND RACES TOGETHER

Rear Clutch

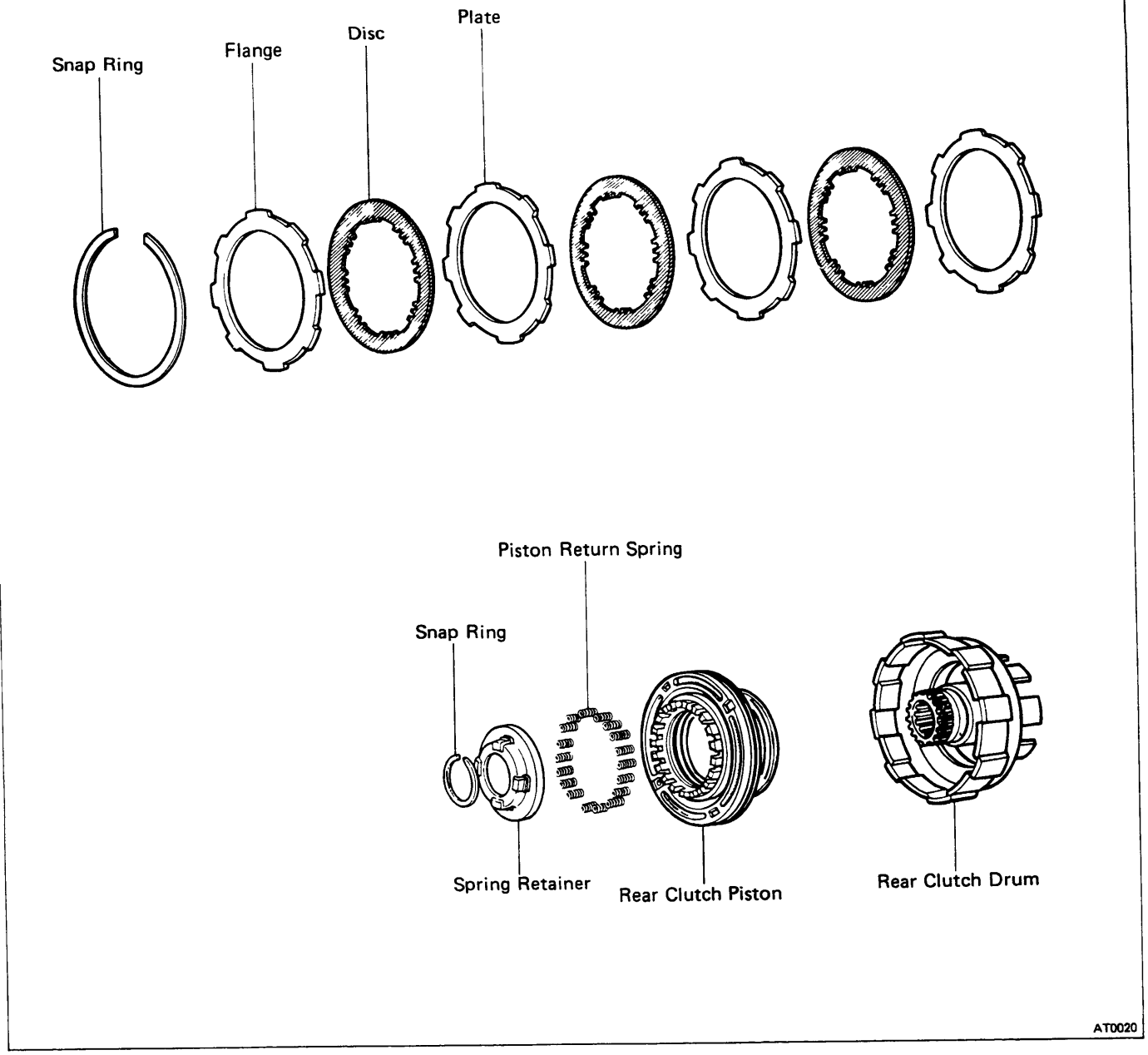

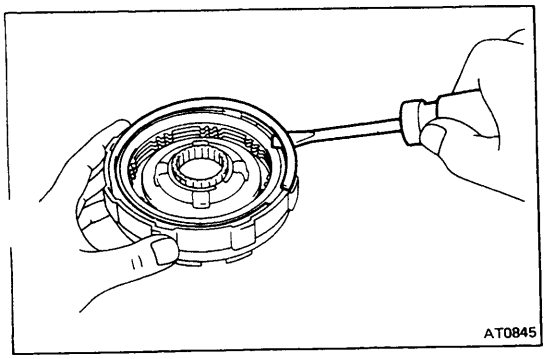

DISASSEMBLY OF REAR CLUTCH

1. REMOVE SNAP RING FROM DRUM
2. REMOVE CLUTCH FLANGE, DISCS AND PLATES



3. COMPRESS PISTON RETURN SPRINGS AND REMOVE SNAP RING

Place SST on the spring retainer and compress the sprir with a shop press.

Using snap ring pliers, remove the snap ring.

SST 09350-20013

4. REMOVE SPRING RETAINER AND EIGHTEEN RETURN SPRINGS

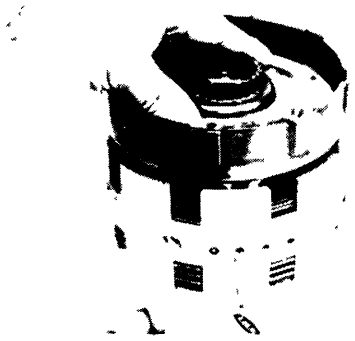

5. ASSEMBLE REAR CLUTCH ON CENTER SUPPORT AND BLOW OUT PISTON

(a) Slide the rear clutch onto the center support.

(b) Apply compressed air to the center support to remove the piston. (If the piston does not come out completely, use pliers to remove it.)

(c) Remove the rear clutch from the center support.

6. REMOVE O-RINGS FROM REAR CLUTCH PISTON

INSPECTION OF REAR CLUTCH

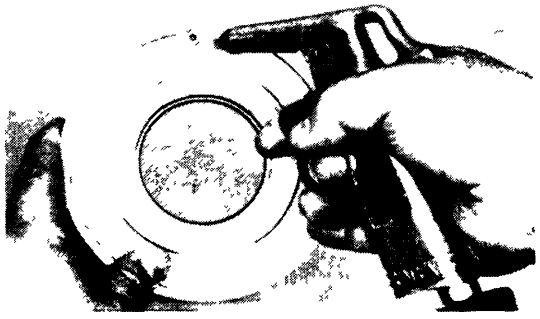

INSPECT REAR CLUTCH PISTON

(a) Check that the check ball is free by shaking each piston.

(b) Check that the valve does not leak by applying low-pressure compressed air.

NOTE: Do not allow the discs to dry out. Prepare new discs by soaking them at least two hours in ATF.

ASSEMBLY OF REAR CLUTCH

(See page AT-51)

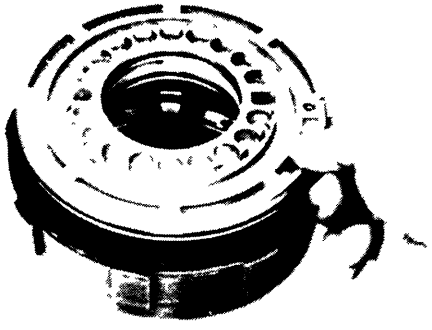

1. INSTALL NEW O-RINGS ON PISTON

2. INSTALL REAR CLUTCH PISTON IN DRUM

Press the rear clutch piston into the drum with the cup s up, being careful not to damage the O-rings.

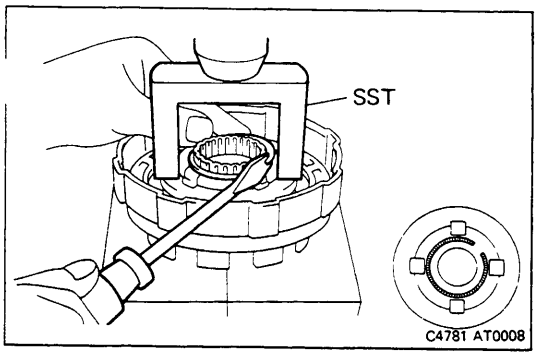

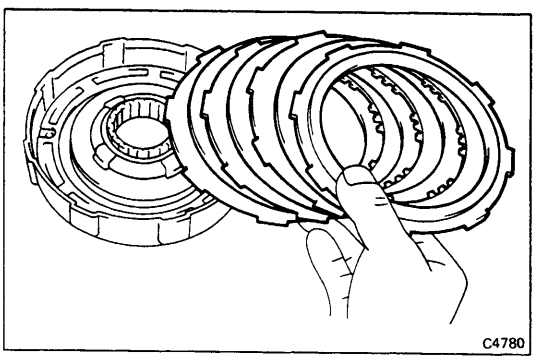

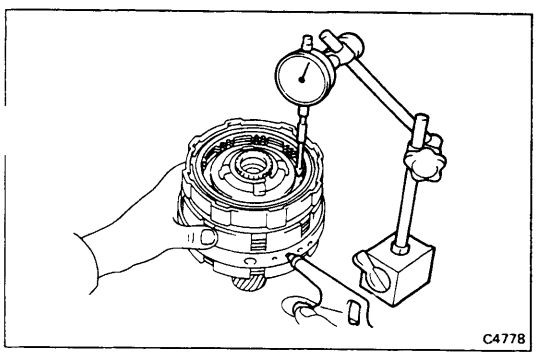

3. INSTALL EIGHTEEN PISTON RETURN SPRINGS AND SET RETAINER WITH SNAP RING IN PLACE

4. COMPRESS RETURN SPRINGS AND INSTALL SNAP RING IN GROOVE

(a) Place SST on the spring retainer, and compress the spring on a shop press.

SST 09350-20013

(b) Install the snap ring with snap ring pliers.
Be sure the end gap of the snap ring is not aligned with the spring retainer claw.

5. INSTALL DISCS, PLATES AND FLANGE

Using low-pressure compressed air, blow all excess ATF from the discs.

CAUTION: High-pressure air will damage the discs.

Install in order: Plate-disc-plate-disc-plate-disc-flange (flat end down)

6. INSTALL SNAP RING

Check that the snap ring ends are not aligned with one of the cutouts.

7. CHECK PISTON STROKE OF REAR CLUTCH

Install the rear clutch onto the center support. Using a dial indicator, measure the stroke applying and releasing the compressed air (4 — 8 kg/cm², 57 — 114 psi or 392 — 785 kPa)as shown.

Standard piston stroke: 0.91 — 1.99 mm (0.0358 — 0.0783 in.)

If the stroke exceeds the limit, the clutch pack is probably worn. If the stroke is less than the limit, parts may be mis-assembled or there may be excess ATF on the discs.

Center Support Assembly

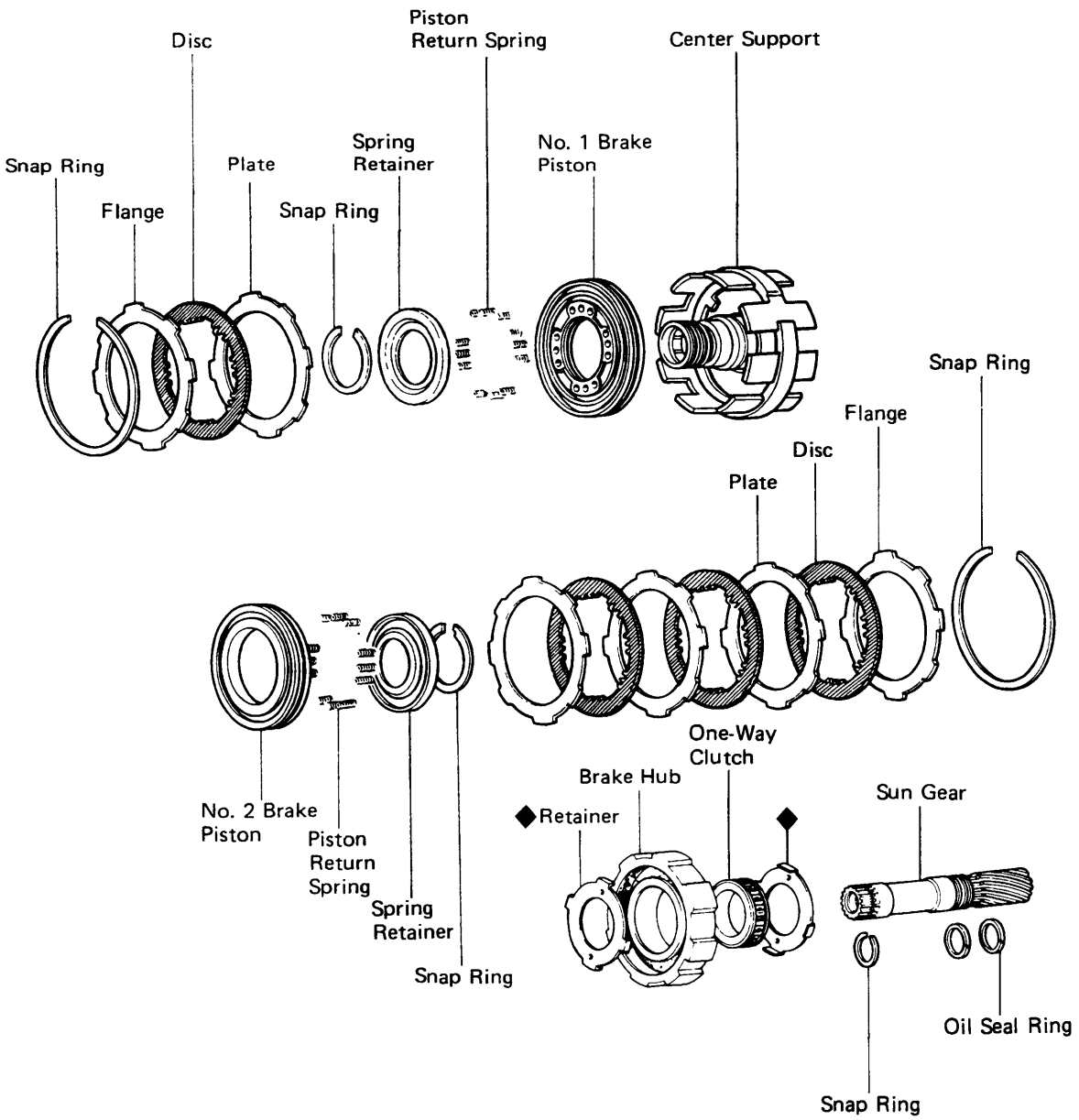

◆ : Non-reusable part

AT0036

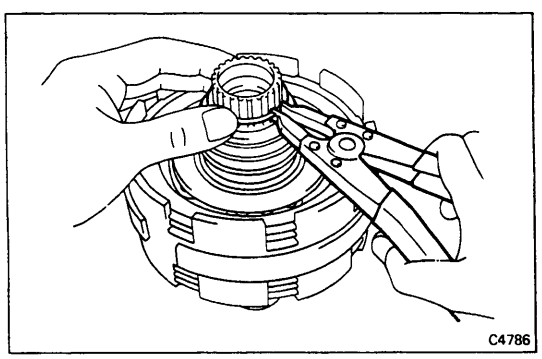

DISASSEMBLY OF CENTER SUPPORT ASSEMBLY

1. REMOVE SNAP RING FROM END OF SUN GEAR SHAFT
2. PULL CENTER SUPPORT ASSEMBLY FROM SUN GEAR

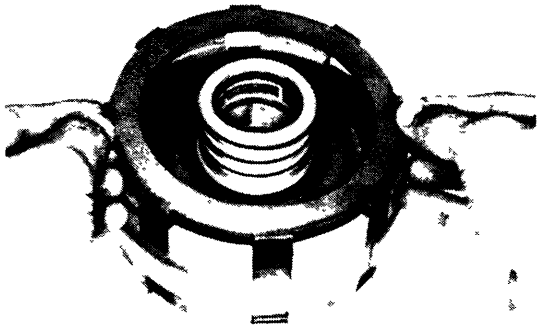

3. **REMOVE SNAP RING FROM FRONT OF CENTER SUPPORT ASSEMBLY (NO.1 BRAKE)**

4. **REMOVE CLUTCH FLANGE, DISC AND PLATE (NO.1 BRAKE)**

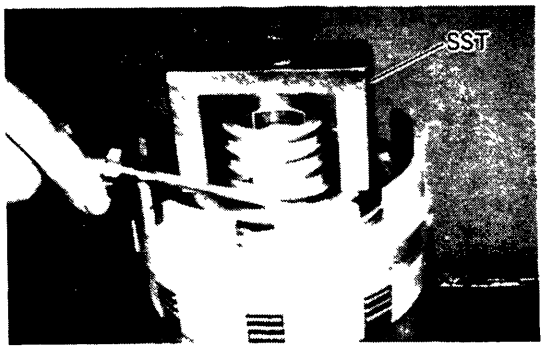

5. **COMPRESS PISTON RETURN SPRING AND REMOVE SNAP RING**

   Place SST on the spring retainer and compress the springs with a shop press.
   Using a screwdriver, remove the snap ring.

   SST 09350-20013

6. **REMOVE SPRING RETAINER AND TWELVE SPRINGS**

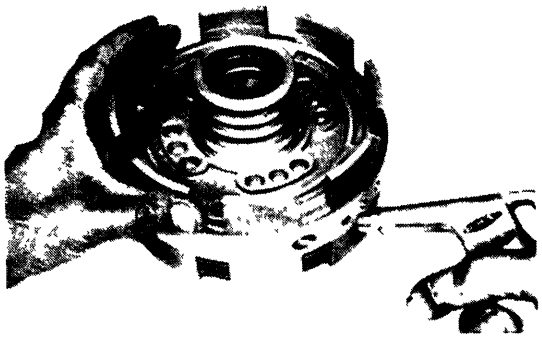

7. **REMOVE NO.1 BRAKE PISTON**

   Blow compressed air through the center support oil hole to remove the No. 1 brake piston.

   If piston does not pop out, lift it out with needle-nose pliers.

8. **REMOVE NO.1 BRAKE PISTON O-RINGS**

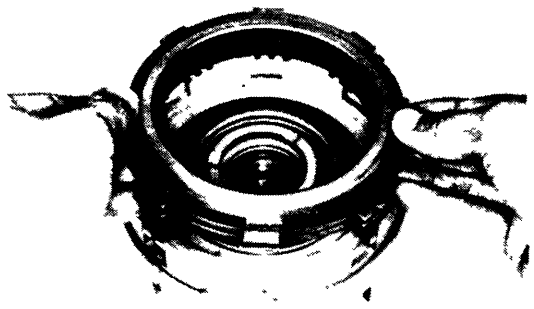

9. **TURN CENTER SUPPORT ASSEMBLY OVER AND REMOVE REAR SNAP RING (NO.2 BRAKE)**

10. **REMOVE CLUTCH FLANGE, DISCS AND PLATES (NO.2 BRAKE)**

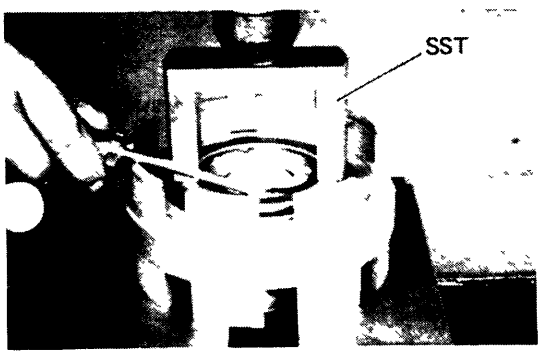

11. **COMPRESS PISTON RETURN SPRINGS AND REMOVE SNAP RING**

    Place SST on the spring retainer and compress the springs with a shop press.

    Using a screwdriver, remove the snap ring.

    SST 09350-20013

12. **REMOVE SPRING RETAINER AND SPRINGS**

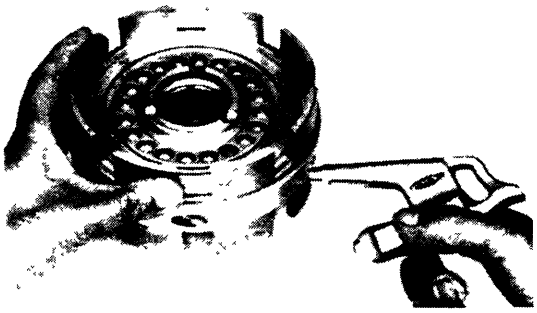

13. REMOVE NO.2 BRAKE PISTON

Blow compressed air through the center support oil hole to remove the No.2 brake piston.

If the piston does not pop out, lift if out with needle-nose pliers.

14. REMOVE NO.2 BRAKE PISTON O-RINGS

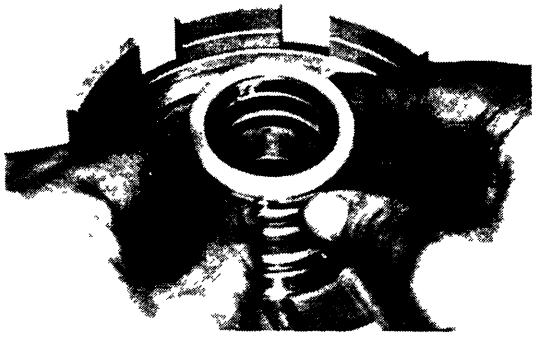

15. REMOVE THREE OIL SEAL RINGS FROM CENTER SUPPORT

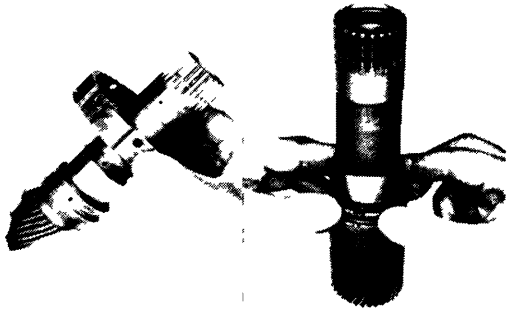

16. REMOVE ONE-WAY CLUTCH ASSEMBLY AND OIL SEAL RINGS FROM SUN GEAR

INSPECTION OF CENTER SUPPORT ASSEMBLY

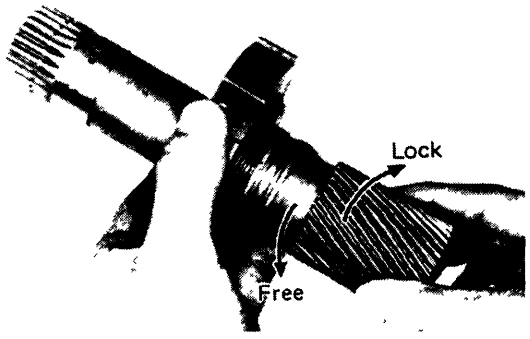

1. CHECK OPERATION OF ONE-WAY CLUTCH

Hold the No.2 brake hub and turn the sun gear. The sun gear should turn freely counterclockwise and should lock clockwise.

If the one-way clutch does not work properly, replace it.



2. IF NECESSARY, REPLACE ONE-WAY CLUTCH

(a) Bend several tabs back with a tapered punch.

(b) Pry off the retainer with a screwdriver. Leave the other retainer on the hub.

(c) Remove the one-way clutch.

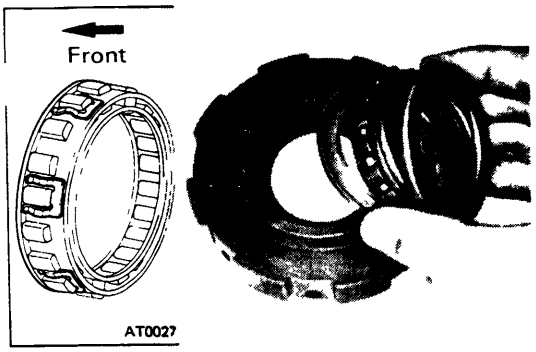

(d) Install the one-way clutch into the brake hub facing the spring cage toward the front.



(e) Hold the brake hub in vise with soft jaws, and flatten the ears with a chisel.

(f) Check to make sure that the retainer is centered.

NOTE: Do not allow the discs to dry out.
Prepare new discs by soaking them at least two hours in ATF.

ASSEMBLY OF CENTER SUPPORT ASSEMBLY

(See page AT-54)

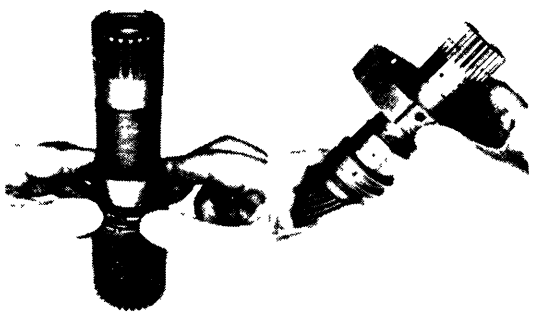

1. INSTALL TWO OIL SEAL RINGS AND ONE-WAY CLUTCH ASSEMBLY ON SUN GEAR

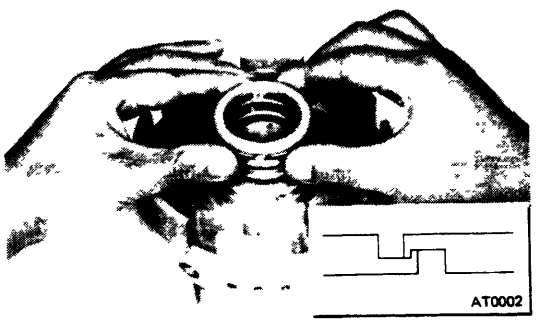

2. INSTALL THREE OIL SEAL RINGS ON CENTER SUPPORT

Spread apart and slip them into the groove.
Hook both ends by hand.

3. INSTALL NEW O-RINGS ON PISTON

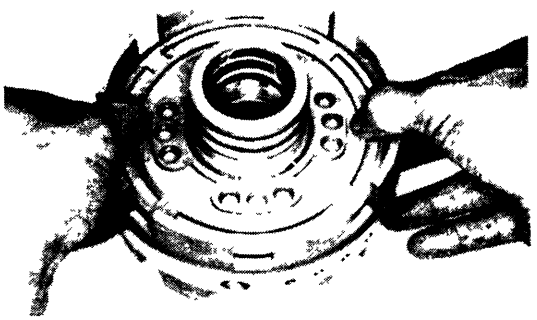

4. INSTALL NO.1 BRAKE PISTON IN CENTER SUPPORT

Press the No.1 brake piston into the center support with the cup side up, being careful not to damage the O-rings.

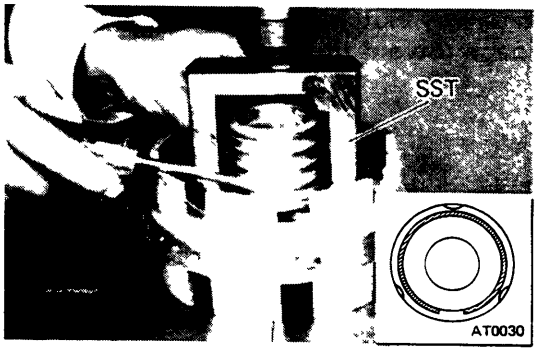

5. **INSTALL TWELVE PISTON RETURN SPRINGS AND SET RETAINER WITH SNAP RING IN PLACE**

6. **COMPRESS RETURN SPRINGS AND INSTALL SNAP RING IN GROOVE**

   (a) Place SST on the spring retainer, and compress the springs on a shop press.

   SST 09350-20013

   (b) Install the snap ring with a screwdriver.
   Be sure the end gap of the snap ring is not aligned with the spring retainer claw.

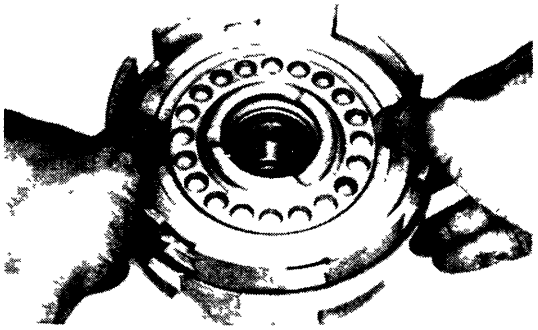

7. **INSTALL NEW O-RINGS ON PISTON AND CENTER SUPPORT**

8. **TURN CENTER SUPPORT OVER AND INSTALL NO. 2 BRAKE PISTON**

   Press the No. 2 brake piston into the center support with the cup side up, being careful not to damage the O-rings.

9. **INSTALL PISTON RETURN SPRINGS AND SET RETAINER WITH SNAP PING IN PLACE**

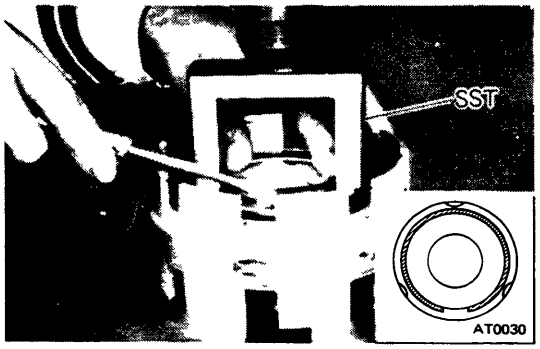

10. **COMPRESS RETURN SPRINGS AND INSTALL SNAP RING IN GROOVE**

    (a) Place SST on the spring retainer, and compress the springs on a shop press.

    SST 09350-20013

    (b) Install the snap ring with a screwdriver.
    Be sure the end gap of the snap ring is not aligned with the spring retainer claw.

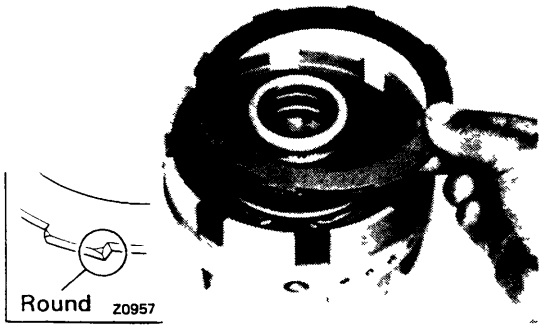

11. **TURN CENTER SUPPORT OVER AND INSTALL NO. 1 BRAKE PISTON PLATE, DISC AND FLANGE**

    Using low-pressure compressed air, blow all excess ATF from the discs.

    CAUTION: High-pressure air will damage the discs.

    Install in order: Plate-disc-flange (rounded edge down)

12. **INSTALL SNAP RING IN CENTER SUPPORT**

    Chek that the snap ring ends are not aligned with one of the cutouts.

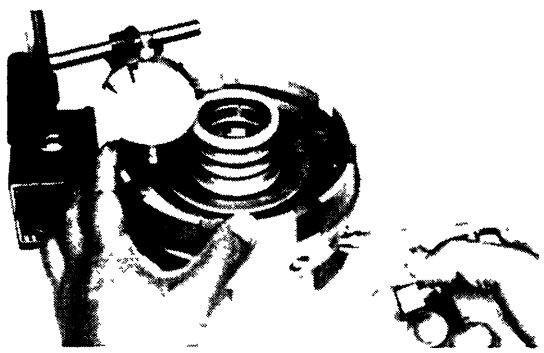

13. **CHECK PISTON STROKE OF NO. 1 BRAKE**

    Using a dial indicator, measure the stroke applying and releasing compressed air (4 — 8 kg/cm², 57 — 114 psi or 392 — 785 kPa as shown.

    Standard piston stroke: 0.58 — 1.30 mm (0.0228 — 0.0512 in.)

    If the stroke exceeds the limit, the clutch pack is probably worn. If the stroke is less than the limit, parts may be misassembled or there may be excess ATF on the discs.



14. TURN CENTER SUPPORT OVER AND INSTALL NO. 2 BRAKE PLATES, DISCS AND FLANGE

Using the low-pressure compressed air, blow all excess ATF from the discs.

CAUTION: High-pressure air will damage the discs.

Install in order: Plate-disc-plate-disc-plate-disc-flange

15. INSTALL SNAP RING IN CENTER SUPPORT

Check that the snap ring ends are not aligned with one of the cutouts.

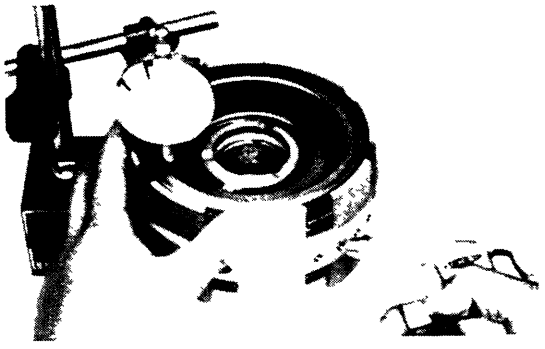

16. CHECK PISTON STROKE OF NO. 2 BRAKE

Using a dial indicator, measure the stroke applying and releasing the compressed air (4 — 8 kg/cm², 57 — 114 psi or 392 — 785 KPa) as shown.

Standard piston stroke: 1.01 — 2.25 mm (0.0398 — 0.0886 in.)

If the stroke exceeds the limit, the clutch pack is probably worn. If the stroke is less than the limit, parts may be misassembled or there may be excess ATF on the discs.

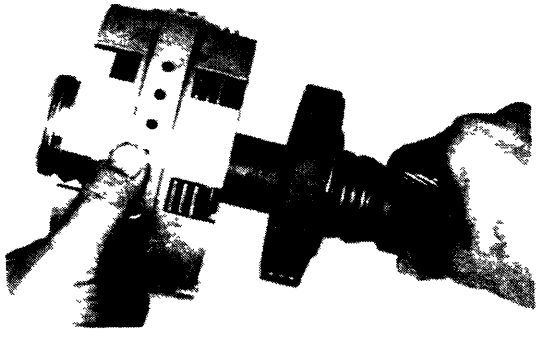

17. ASSEMBLE CENTER SUPPORT AND SUN GEAR

(a) Align the brake No. 2 disc flukes.

(b) Mesh the brake hub with the discs, twisting and jiggling the hub as required.

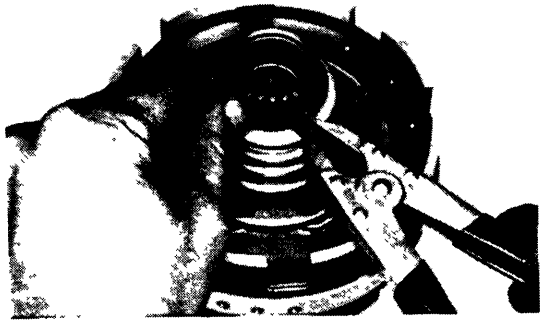

18. INSTALL SNAP RING ON END OF SUN GEAR

Planetary Gear Output Shaft

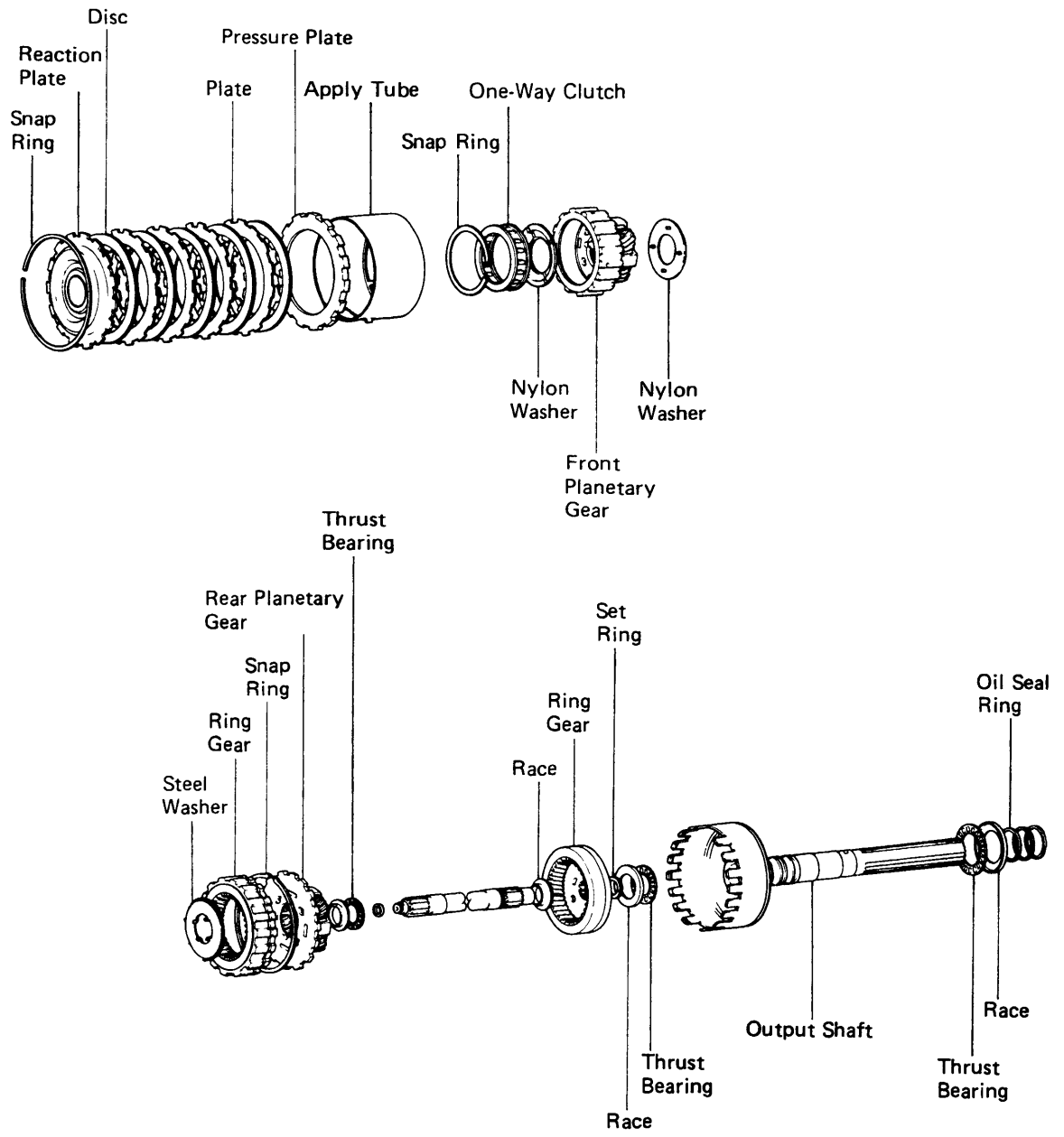

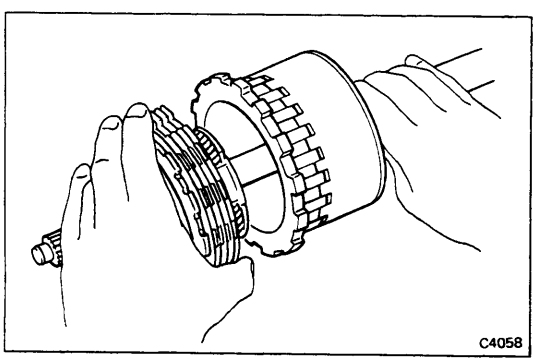

DISASSEMBLY OF PLANETARY GEAR OUTPUT SHAFT

1. **REMOVE NO. 3 BRAKE DISC/PLATE PACK AND FRONT PLANETARY PINION GEARS**

   Grasp the components and pull off the front end of the output shaft.
   Be careful not to drop the bearing on the output shaft.



2. **REMOVE THRUST WASHER FROM PLANETARY GEARS**

   NOTE: The thrust washer may have stuck to the inside of the planetary gear case.

3. **REMOVE BRAKE DISCS AND PLATES FROM PLANETARY GEARS**

4. **REMOVE REACTION PLATE FROM PLANETARY GEARS**

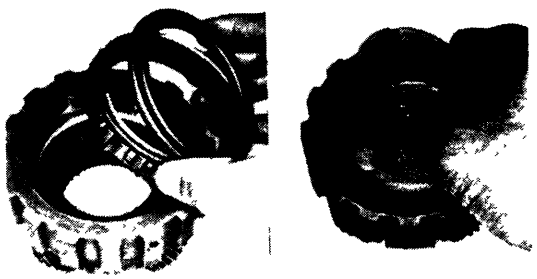

5. **REMOVE SNAP RING AND ONE-WAY CLUTCH FROM PLANETARY GEARS**

6. **REMOVE NYLON THRUST WASHER FROM PLANETARY GEARS**

7. **REMOVE APPLY TUBE AND CLUTCH PRESSURE PLATE**

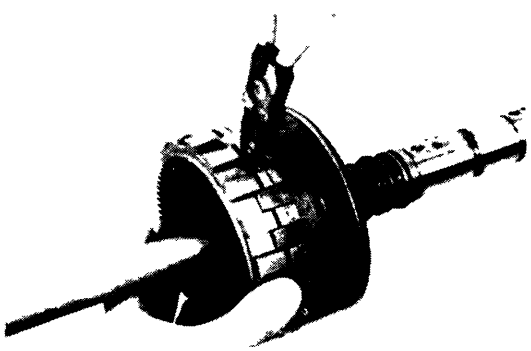

8. **COMPRESS SHAFT SNAP RING AND REMOVE FRONT PLANETARY RING GEAR**
   (a) While pulling up the ring gear, compress the snap ring with needle-nose pliers and remove it from the groove.
   (b) Pull out the ring gear by hand.

9. **REMOVE INTERMEDIATE SHAFT FROM OUTPUT SHAFT ASSEMBLY**



10. **REMOVE THRUST BEARING AND RACES FROM OUTPUT SHAFT ASSEMBLY**
    Note the position of the races.

11. **REMOVE THREE OIL SEAL RINGS FROM OUTPUT SHAFT**

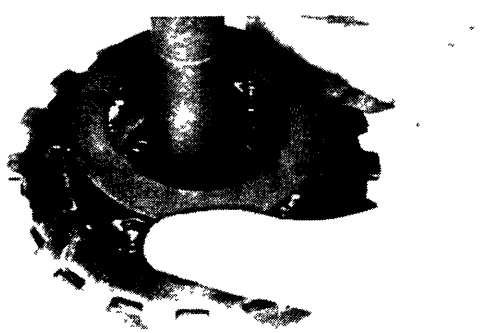

12. **REMOVE THRUST WASHER AND REAR PINION GEARS FROM INTERMEDIATE SHAFT ASSEMBLY**

13. **REMOVE RACE AND THRUST BEARING FROM INTERMEDIATE SHAFT**
    Note the position of the race.

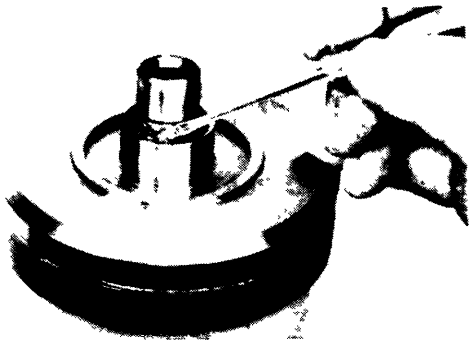

14. INVERT INTERMEDIATE SHAFT AND REMOVE SET RING

15. REMOVE REAR PLANETARY RING GEAR AND BEARING RACE FROM INTERMEDIATE SHAFT

Note the position of the race.

INSPECTON OF PLANETARY GEAR OUTPUT SHAFT

NOTE: Do not allow the discs to dry out. Prepare new discs by soaking them at least two hours in ATF.

ASSEMBLY OF PLANETARY GEAR OUTPUT SHAFT

(See page AT-60)

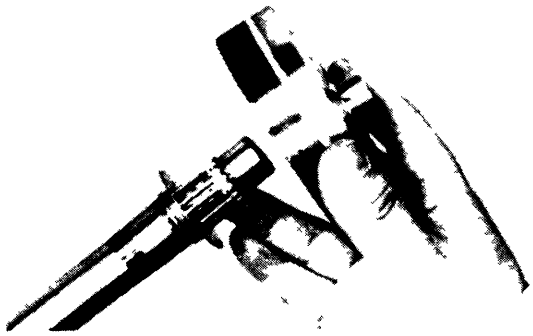

1. INSTALL THRUST BEARING RACE AND REAR PLANETARY RING GEAR ON INTERMEDIATE SHAFT

Slip the thrust bearing race and ring gear onto the shaft with the exterior splines up, as shown.

2. INSTALL SET RING ON INTERMEDIATE SHAFT

Push down and wind the set ring into place. Check to make sure it is secure.



3. TURN OVER INTERMDIATE SHAFT AND INSTALL THRUST BEARING AND RACE

Make sure the flat side of race is against the bearing.



4. INSTALL PINION GEAR ASSEMBLY THRUST WASHER ON REAR PLANETARY CARRIER

Install the washer with the lugs down, fitting them into the rear planetary gear carrier.

CAUTION: Make sure the different lug shapes match the openings on the plate.

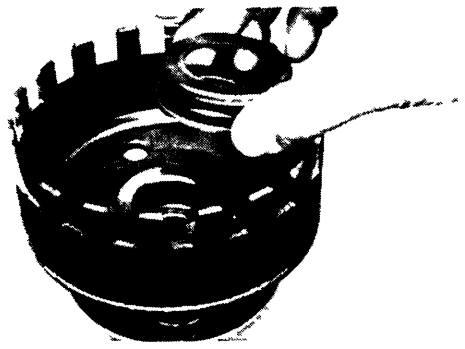

5. **INSTALL THREE OIL SEAL RINGS ON OUTPUT SHAFT**
   Spread apart and slide them into the groove.
   Hook both ends by hand.

6. **USE EXTENSION HOUSING AS ASSEMBLY STAND**

7. **INSTALL THRUST BEARING AND RACE ON OUTPUT SHAFT**
   Hold the cup of the race toward the bearing.

8. **INSTALL INTERMEDIATE SHAFT ASSEMBLY IN OUTPUT SHAFT**

9. **INSTALL REAR PLANETARY CARRIER IN OUTPUT SHAFT**
   Slide it into place, and make sure the lugs interlock.

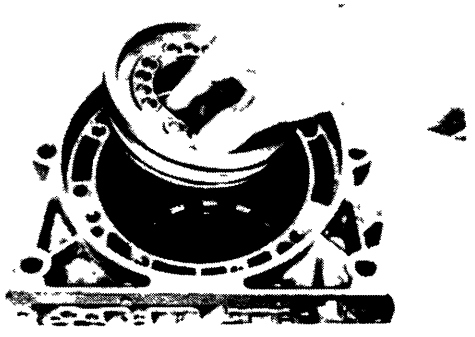

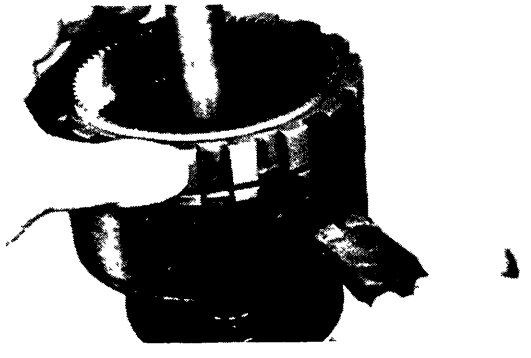

10. **SET FRONT PLANETARY RING GEAR IN PLACE**
    Slide the snap ring downward, and align the lugs with the notches.
    Align the ends of the snap ring with the wide gap between the teeth.

11. **INSTALL FRONT PLANETARY RING GEAR WITH SNAP RING**
    While pushing down the ring gear, squeeze the snap ring end with needle-nose pliers and install it into the groove.
    NOTE: When the snap ring is fully seated, the gap is the width of one lug.



12. **INSTALL NYLON THRUST WASHER IN FRONT PLANETARY PINION GEAR**
    Face the lugs downward and match them with the slots in back of the planetary gear.

13. **INSTALL SNAP RING**

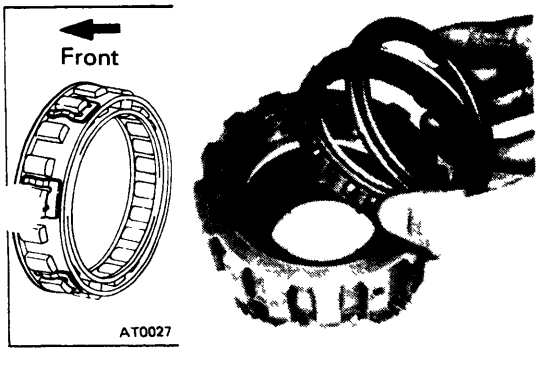

14. **INSTALL ONE-WAY CLUTCH**
    Install the one-way clutch into the outer race, facing the spring cage toward the front.

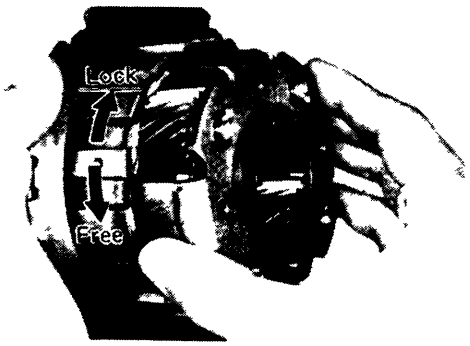

15. TEMPORARILY INSTALL REACTION PLATE ON PLANETARY

Insert it into place for test of the one-way clutch.

16. TEST ONE-WAY CLUTCH

The planetary gear must rotate freely counterclockwise and lock clockwise.

If the clutch does not work correctly, it must be replaced.

17. REMOVE REACTION PLATE

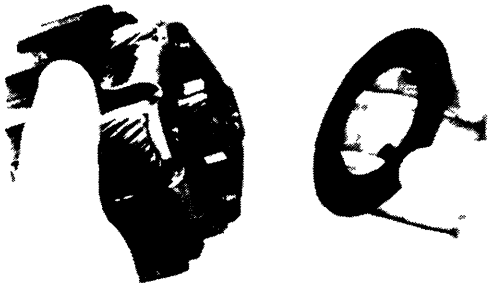

18. INSTALL THRUST WASHER ON FRONT PLANETARY CARRIER

Apply petroleum jelly to the washer to hold it in place during assembly later. Match the lugs with the planetary carrier when installing.

19. INSTALL FRONT PLANETARY GEAR ASSEMBLY TO INTERMEDIATE SHAFT



20. INSTALL PRESSURE PLATE

Install the pressure plate facing the flat surface toward the intermediate shaft.

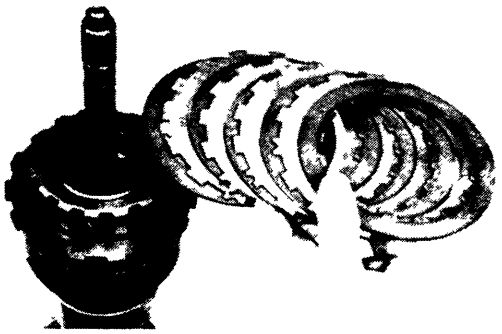

21. INSTALL NO.3 BRAKE CLUTCH PACK

Using the low-pressure compressed air, blow all excess ATF from the discs.

CAUTION: High-pressure air will damage the discs.

Install in order: Disc-plate-disc-plate-disc-plate-disc-plate-disc

22. KEEP REACTION PLATE, APPLY TUBE, THRUST BEARING AND RACE TOGETHER

Transmission Case and Rear Brake Pistons

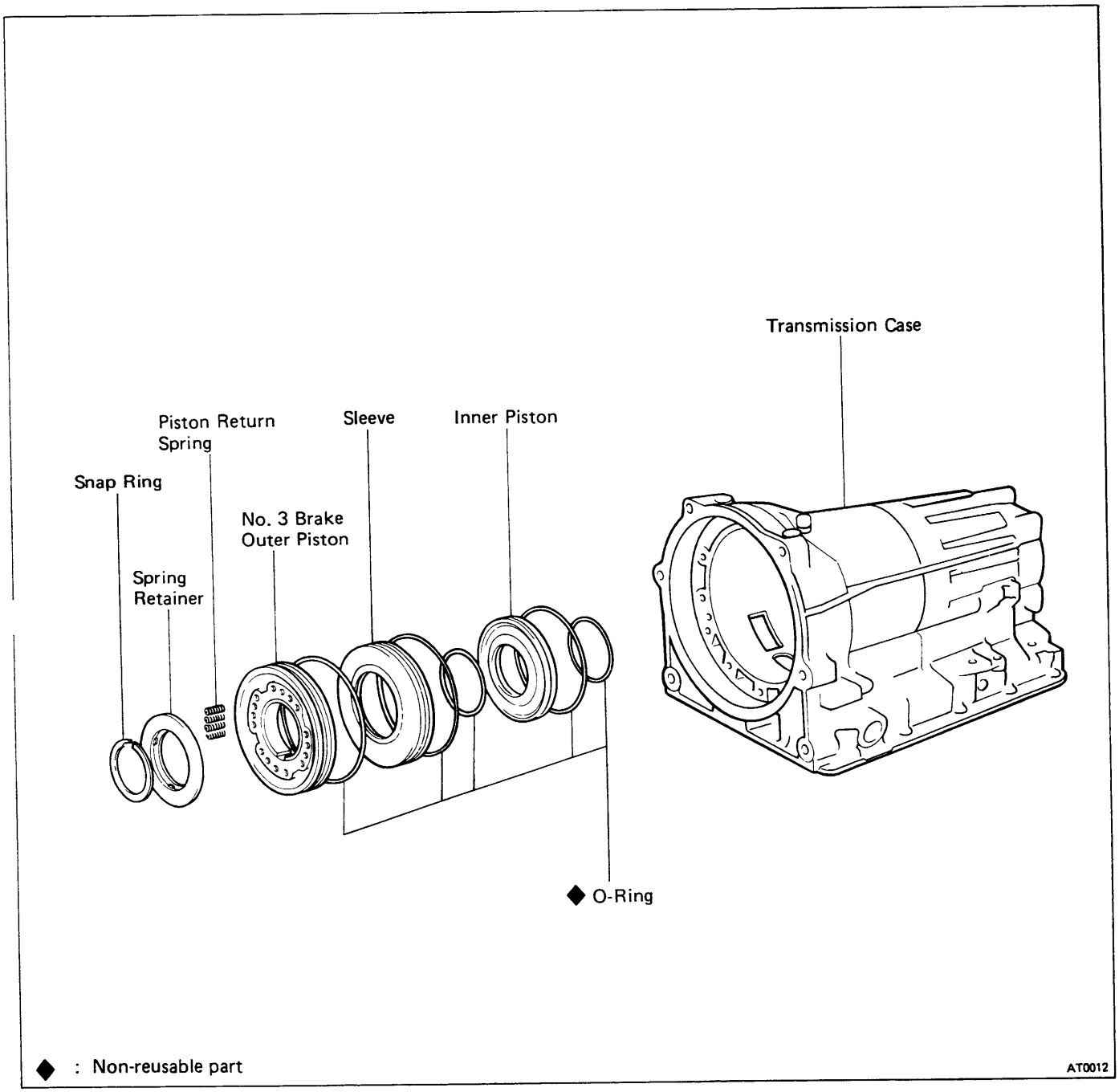

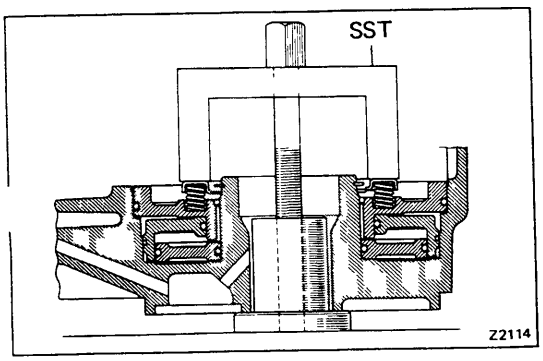

DISASSEMBLY OF TRANSMISSION CASE AND REAR BRAKE PISTONS

1. **COMPRESS RETURN SPRINGS AND REMOVE SPRING RETAINER SNAP RING**

   (a) Install the SST. Gradually and evenly tighten the bolt to compress the springs, being careful not to damage the transmission case with SST.

   SST 09350-20013

   (b) Using snap ring pliers and a hook, remove the snap ring.

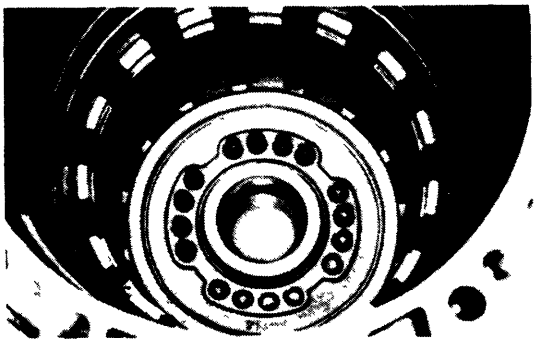

2. REMOVE SPRING RETAINER AND SIXTEEN SPRINGS

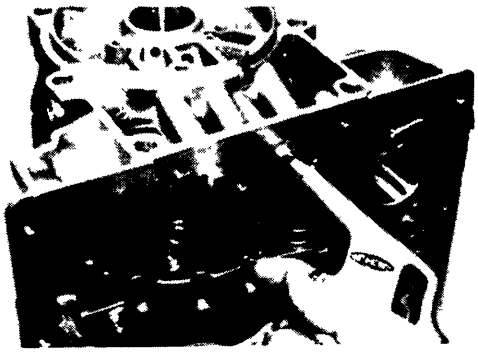

3. REMOVE OUTER PISTON AND REACTION SLEEVE WITH COMPRESSED AIR

(a) Turn the case over face down on a workbench. Place several clean shop rags under the case to catch the piston and sleeve. To pop them out, apply compressed air to the outer and inner piston oil holes.

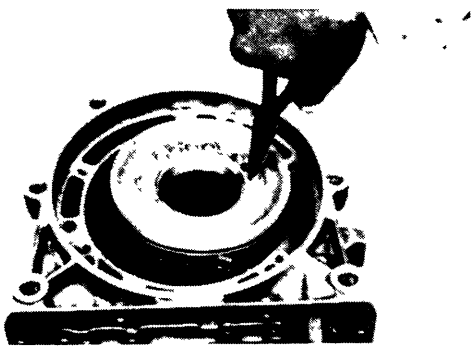

If the piston and sleeve do not pop out with the compressed air.

(b) Using needle-nose pliers, lift the outer piston from the case.

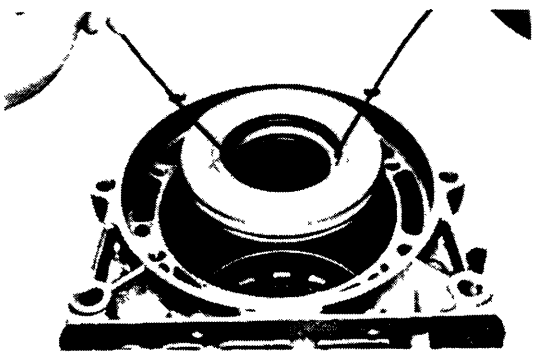

(c) Insert two long hooks behind the reaction sleeve and gradually lift it out of the case.

(d) Using hooks, lift the inner piston out of case in the same manner.

4. REMOVE O-RINGS FROM OUTER AND INNER PISTONS AND REACTION SLEEVE

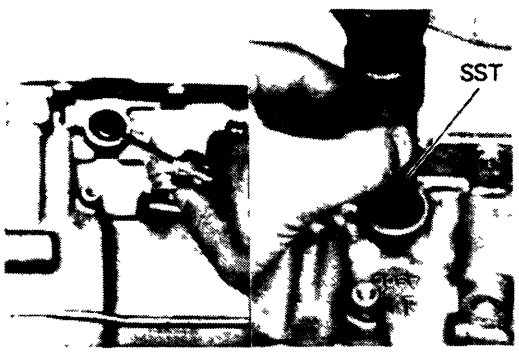

INSPECTION OF CASE COMPONENT GROUP

REPLACEMENT OF MANUAL SHAFT OIL SEALS

(a) Remove the manual shaft oil seals with a screwdriver.

(b) Drive in new left and right oil seals with SST.

SST 09350-20013



ASSEMBLY OF TRANSMISSION CASE AND REAR BRAKE PISTONS

(See page AT-65)

1. **INSTALL NEW O-RINGS ON REACTION SLEEVE AND PISTONS**

   CAUTION: The thinner O-ring goes on the outside of the reaction sleeve.

2. **INSTALL INNER AND OUTER PISTONS IN REACTION SLEEVE**

   (a) Push the inner piston into the cupped side of the reaction sleeve.

   (b) Push the outer piston onto the other side of the reaction sleeve.

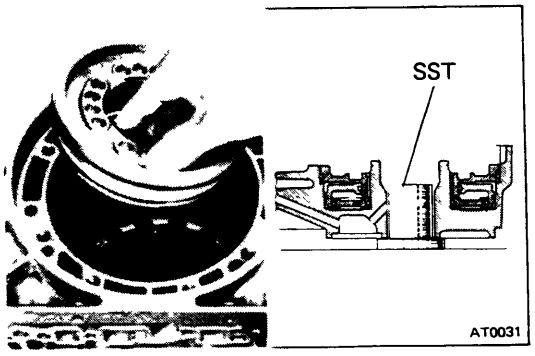

3. **INSTALL PISTONS AND SLEEVE IN CASE**

   CAUTION: Be careful not to damage the O-rings.

   Hold the assembly with the outer piston up (spring seats visible), and push the assembly into its bore in the case.

4. **INSTALL SST BASE UNDER CASE**

   SST 09350-20013



5. **INSTALL SIXTEEN PISTON RETURN SPRINGS AND SET RETAINER WITH SNAP RING IN PLACE**

   NOTE: The springs are visible through the cutout in the case, which helps position them more easily

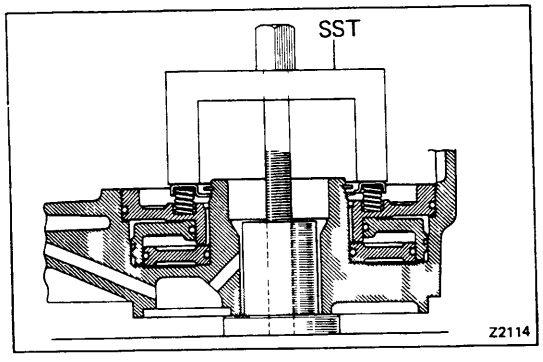

6. **COMPRESS PISTON RETURN SPRINGS TO ALLOW INSTALLATION OF SNAP RING**

   CAUTION: Avoid bending the spring retainer by overtightening the bolts.

   (a) Carefully position the spring compressor on the spring retainer.

   (b) Gradually and evenly tighten the bolt to compress the springs, being careful not to damage the transmission case with SST.

   SST 09350-20013

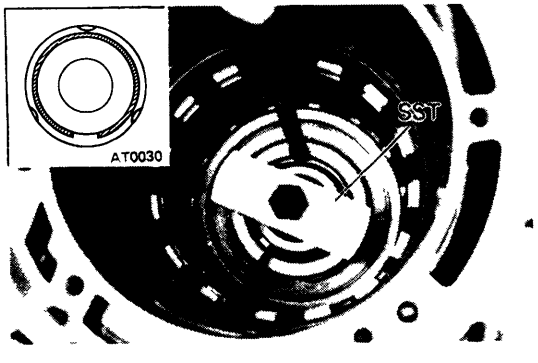

7. **INSTALL SNAP RING**

   (a) Push the snap ring by hand into place. Visually check to make sure it is fully seated and centered by the three lugs on the spring retainer.

   (b) Remove the SST.

   SST 09350-20013

Valve Body

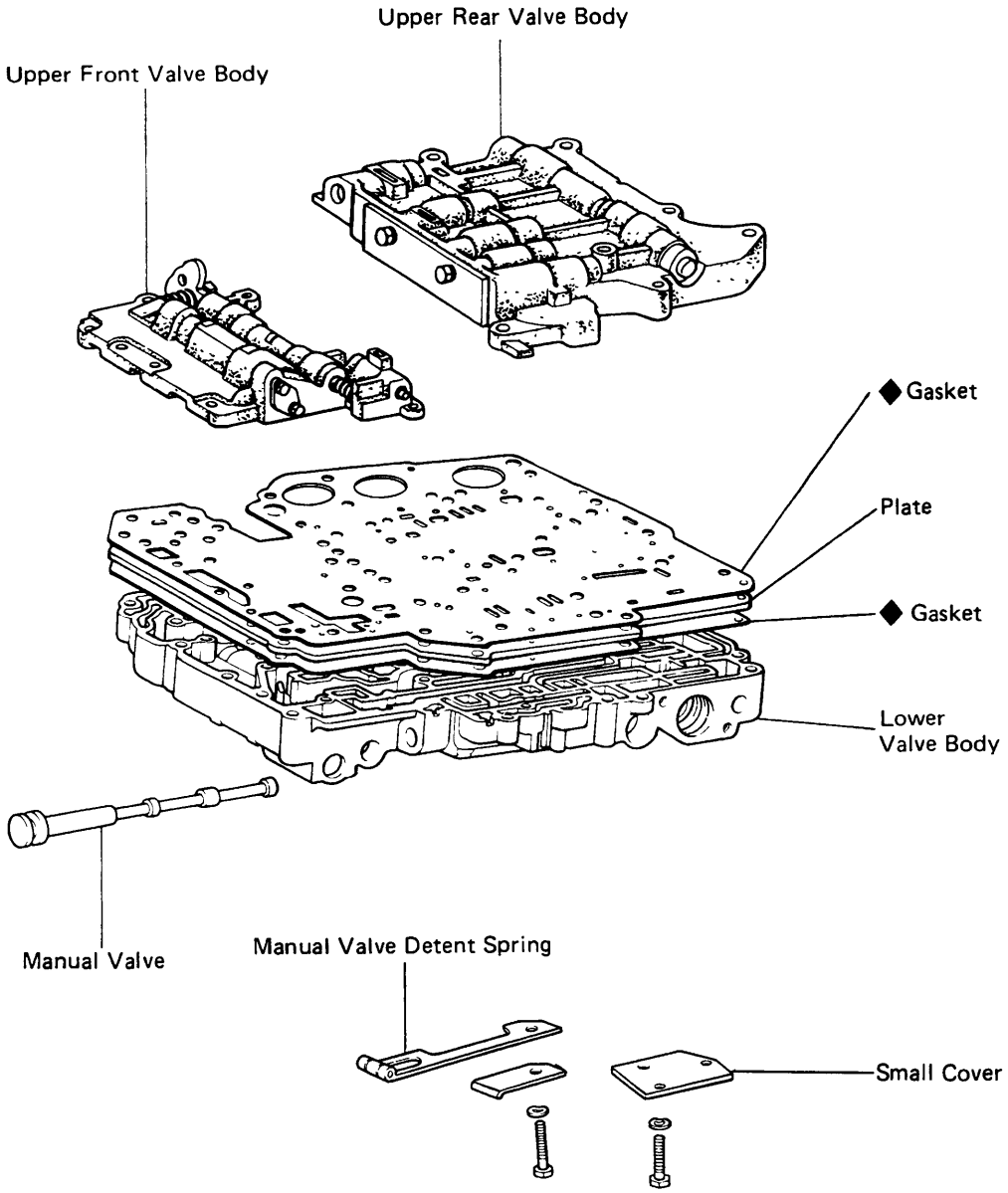

◆ : Non-reusable part

AT0013

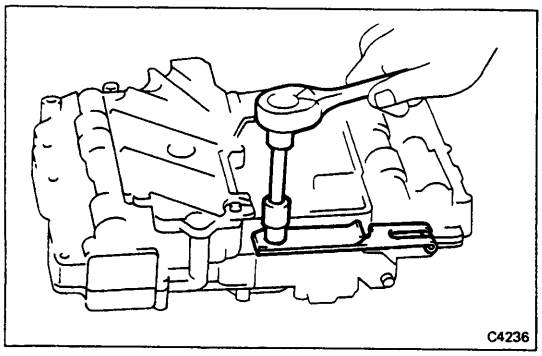

(Disassembly of Valve Body)

1. **REMOVE DETENT SPRING**
2. **REMOVE MANUAL VALVE**

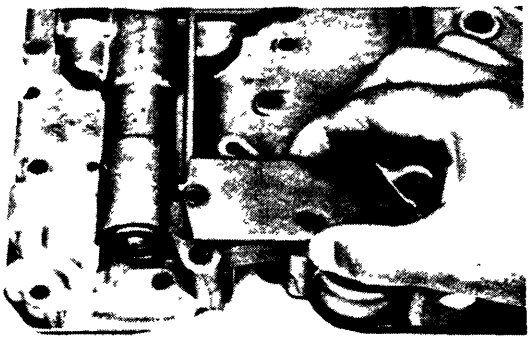

3. **REMOVE SMALL COVER**

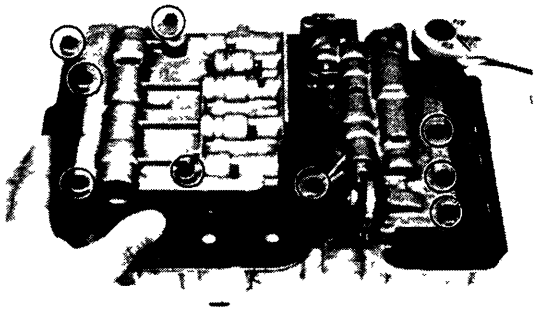

4. **TURN ASSEMBLY OVER AND REMOVE TEN BOLTS FROM UPPER FRONT VALVE BODY AND UPPER REAR VALVE BODY**

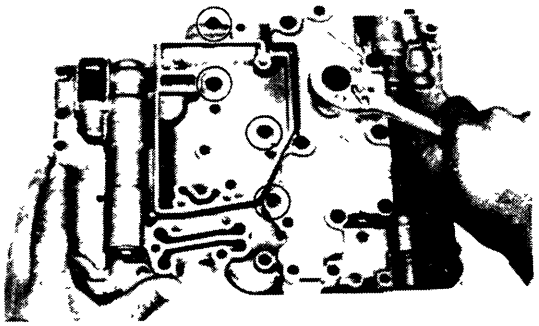

5. **TURN ASSEMBLY OVER AND REMOVE SET BOLTS FROM LOWER VALVE BODY**

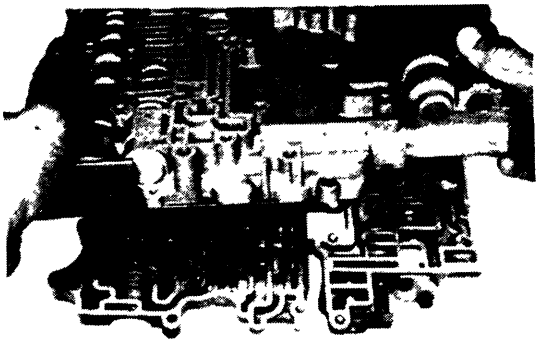

6. **LIFT OFF LOWER VALVE BODY AND PLATE AS SINGLE UNIT**

   NOTE: Be careful that the check valve and balls do not fall out.

(Lower Valve Body)

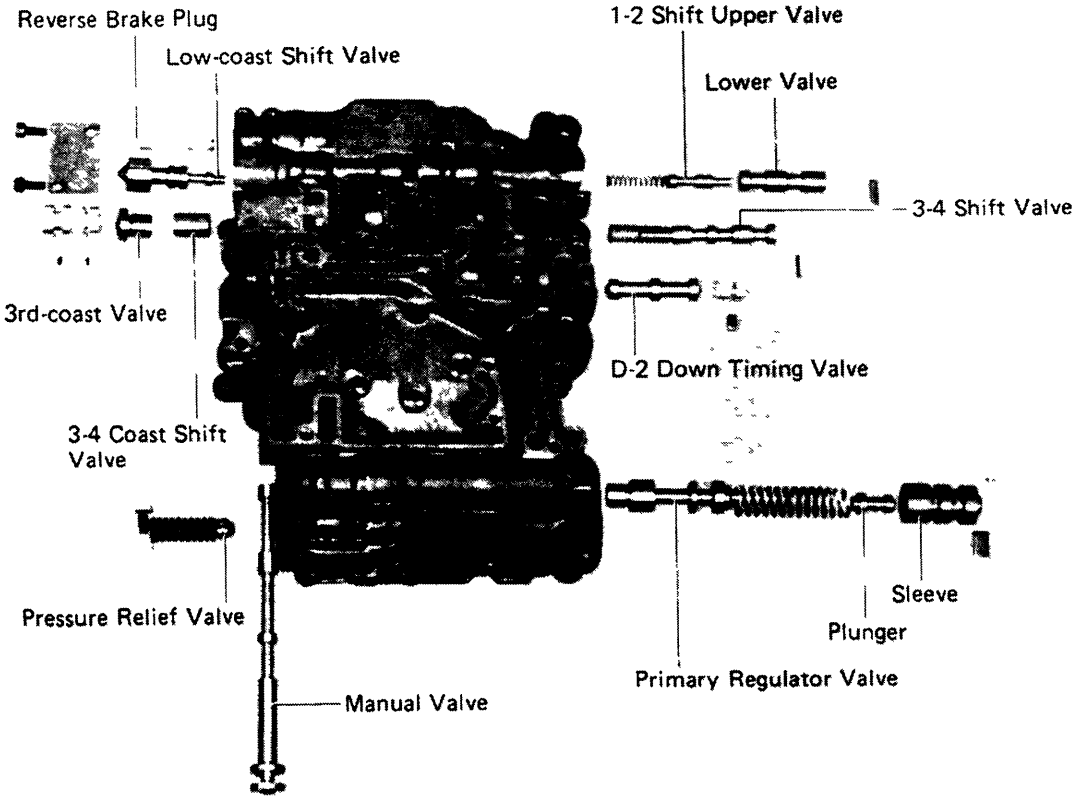

DISASSEMBLY OF LOWER VALVE BODY

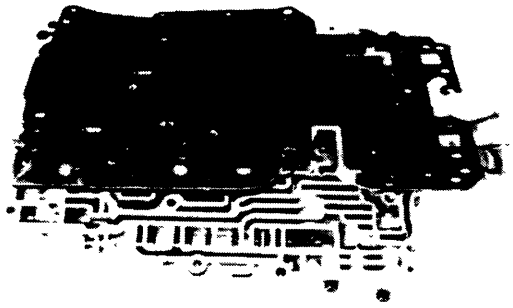

1. **REMOVE LOWER VALVE BODY PLATE AND GASKETS**

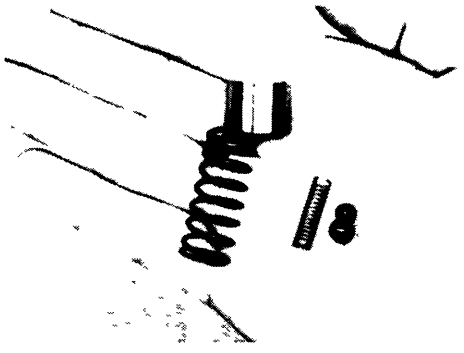

2. **REMOVE CHECK BALLS DAMPING CHECK VALVE SPRING, OIL COOLER BY-PASS VALVE AND SPRING**

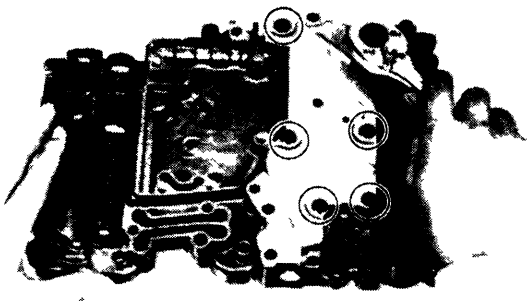

3. **TURN ASSEMBLY OVER, REMOVE SET BOLT AND REMOVE LOWER BODY COVER, PLATE AND GASKETS**



4. **REMOVE CHECK BALLS**

Remove the check balls being careful not to scratch grooves.
Keep the balls together to prevent losing them.

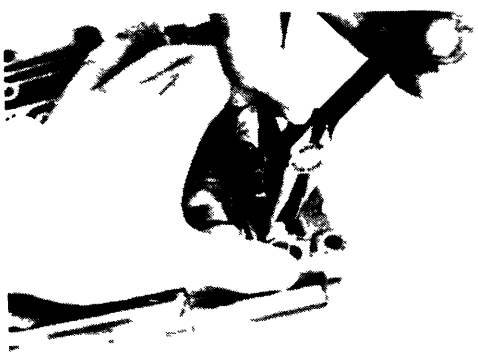

5. **REMOVE SPRING RETAINER FROM PRESSURE RELIEF ASSEMBLY**

CAUTION: Cover the spring by hand. Then, with needle-nose pliers, slowly pull out the spring seat, being careful not to bend the spring.

6. **REMOVE PRESSURE RELIEF SPRING AND BALL**

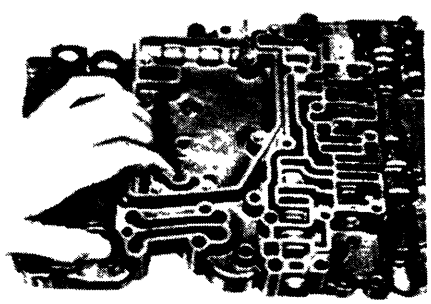

7. **REMOVE SPRING RETAINER FROM PRIMARY REGULATOR VALVE**

WARNING: Highly compressed spring inside — keep away from face.

To remove the retainer, hold the valve body face down, and press in on the valve sleeve. The retainer will drop out. Slowly relieve spring compression.

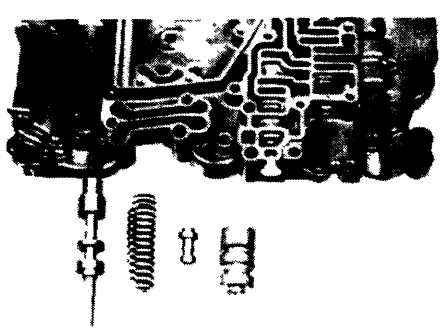

8. **REMOVE SLEEVE, PLUNGER, SPRING AND PRIMARY REGULATOR VALVE**

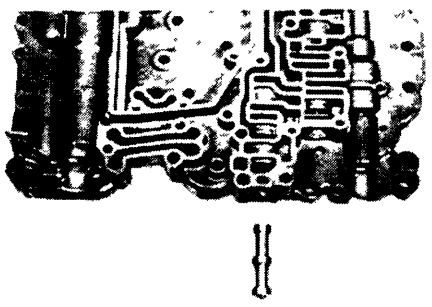

9. REMOVE PLUG RETAINER FOR D-2 DOWN TIMING VALVE
10. REMOVE PLUG AND D-2 DOWN TIMING VALVE

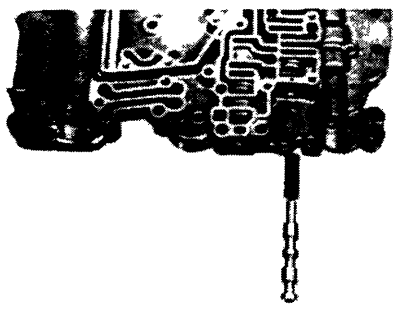

11. REMOVE PLUG LOCATING PIN FOR 3-4 SHIFT VALVE
12. REMOVE PLUG, 3-4 SHIFT VALVE AND SPRING

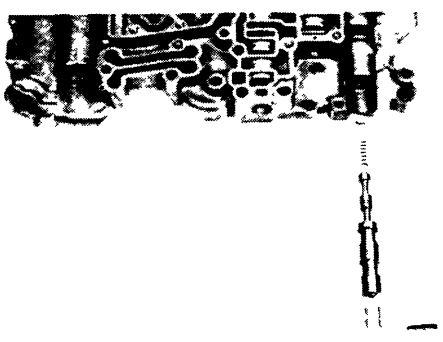

13. REMOVE PLUG RETAINER FOR 1-2 SHIFT VALVE
14. REMOVE PLUG, 1-2 SHIFT VALVE AND SPRING

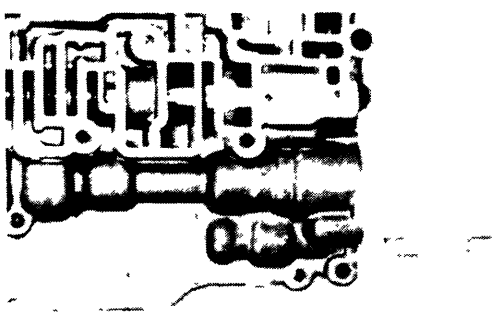

15. REMOVE COVER PLATE
16. REMOVE REVERSE BRAKE PLUG

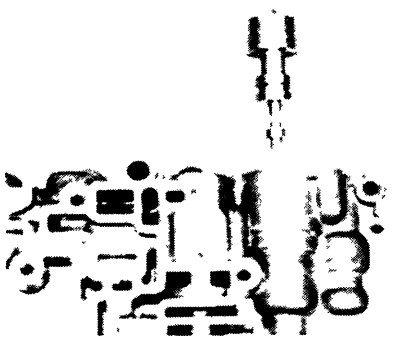

17. REMOVE LOW-COAST SHIFT VALVE

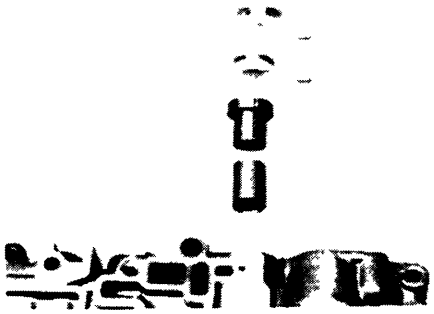

18. REMOVE LOCATING PINS FOR THIRD-COAST VALVE

19. REMOVE PLUGS, THIRD-COAST VALVE AND 3-4 CONTROL VALVE

INSPECTION OF LOWER VALVE BODY

INSPECT VALVE SPRINGS

Check for damage, squareness, rust and distorted coils. Measure the spring free height and replace if less than that shown below.

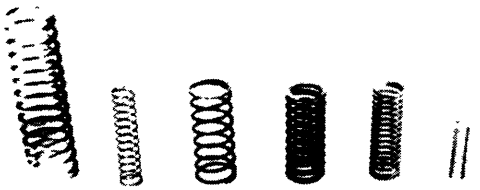

	Free length mm (in.)
(1) Primary regulator valve (22R)	73.32 (2.8866)
Primary regulator valve (22R-E)	61.20 (2.4094)
(2) 1-2 shift valve	34.62 (1.3630)
(3) 3-4 shift valve	33.65 (1.3248)
(4) Oil cooler by-pass valve	33.32 (1.3118)
(5) Pressure relief valve	32.14 (1.2654)
(6) Damping check ball	20.00 (0.7874)

ASSEMBLY OF LOWER VALVE BODY

(See page AT-70)

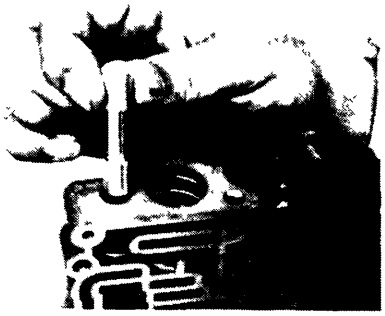

1. INSTALL REVERSE BRAKE PLUG

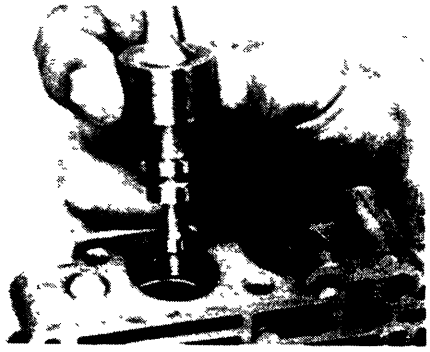

2. INSTALL LOW-COAST SHIFT VALVE

Carefully insert the low-coast shift valve with the small end first.

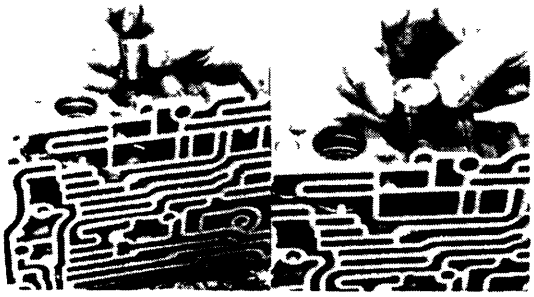

3. INSTALL 3-4 COAST SHIFT VALVE AND THIRD-COAST VALVE

(a) Insert the 3-4 coast shift valve with the cup side first.

(b) Insert the 3rd-coast valve with the small end fir

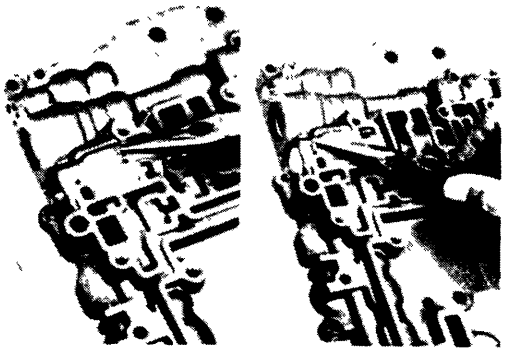

4. INSTALL TWO PLUGS AND LOCATING PIN

(a) Insert the inside plug with the thick face first.

(b) Using needle-nose pliers, insert the locating pin.

(c) Insert the outside plug, and then insert the locating pin.

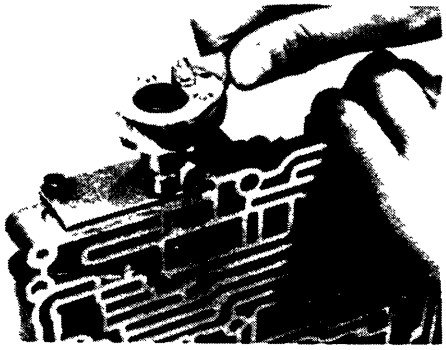

5. INSTALL COVER PLATE

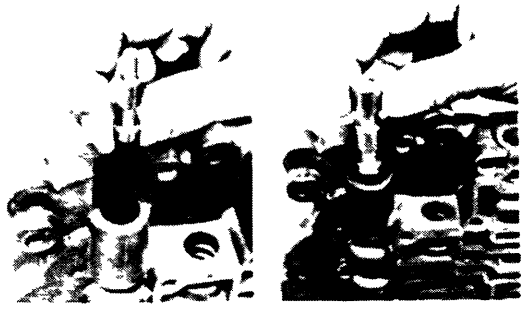

6. **INSERT SPRING, 1-2 SHIFT UPPER VALVE, LOWER VALVE AND PLUG**

   Set the valve body on edge and carefully insert the spring, 1-2 shift upper valve, lower valve and plug.

7. **INSTALL 1-2 SHIFT VALVE PLUG RETAINER**

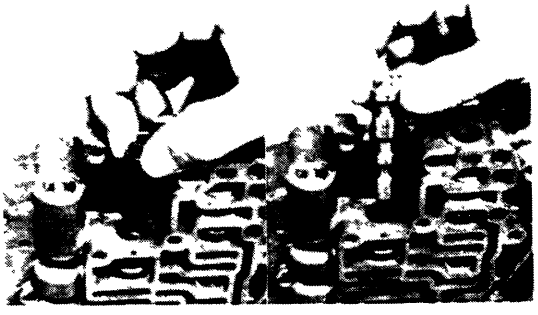

8. **INSERT SPRING, 3-4 SHIFT VALVE AND PLUG**

   Set the valve body on edge and carefully insert the spring, 3-4 shift valve (small end first) and plug.

9. **INSTALL 3-4 SHIFT VALVE PLUG LOCATING PIN**

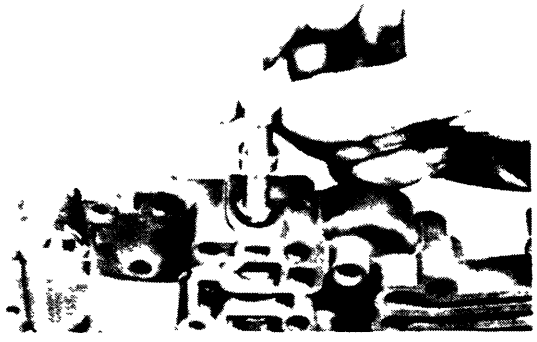

10. **INSTALL D-2 DOWN TIMING VALVE AND PLUG**

    Insert the D-2 down timing valve with the small end first and then the plug with the large end first.

11. **INSTALL D-2 DOWN TIMING VALVE RETAINER**

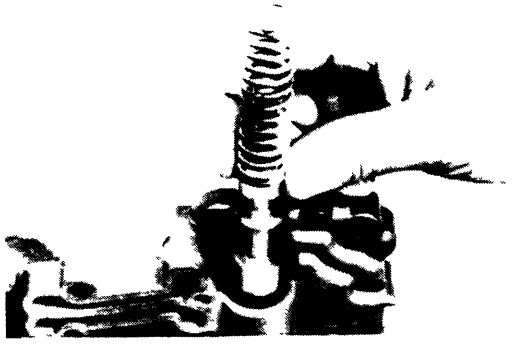

12. **INSERT PRIMARY REGULATOR VALVE AND SPRING**

    Set the valve body on edge and drop in the valve with the large end first and the spring.

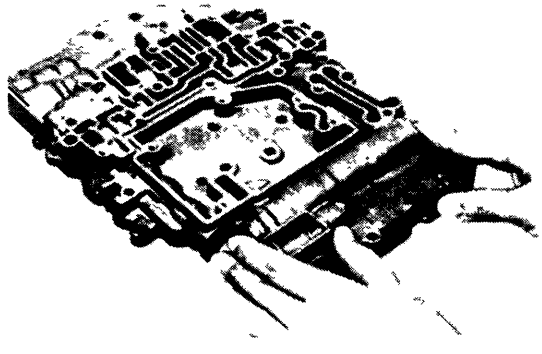

13. **CHECK VALVE POSITION**

    Make sure that the primary regulator valve fits flush with the valve body.



14. INSERT REGULATOR VALVE PLUNGER INTO SLEEVE

Insert with the rounded end first. Make sure that it is fully inserted: the plunger should be recessed inside the slee

15. INSERT SLEEVE WITH PLUNGER

16. INSTALL REGULATOR VALVE SPRING RETAINER

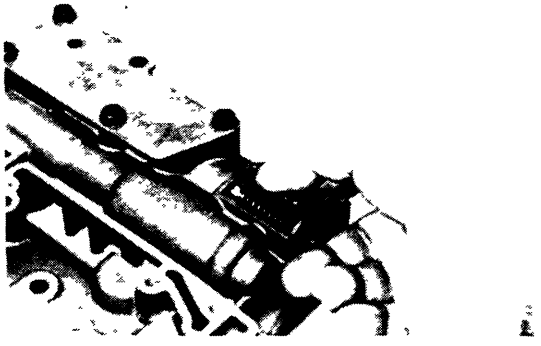

17. INSTALL PRESSURE RELIEF BALL, SPRING AND RETAINER

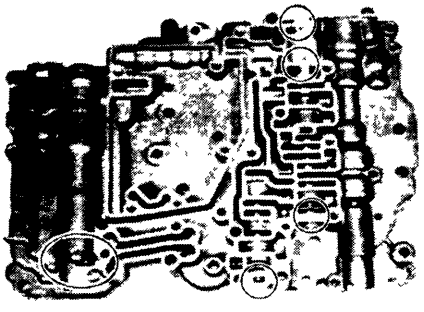

18. CHECK RETAINERS AND LOCATING PINS

Make sure that the retainers and pins are installed correctly.

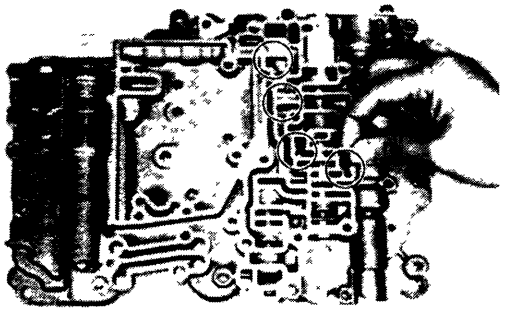

19. INSTALL CHECK BALLS

Body Side

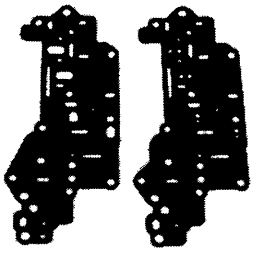

20. INSTALL LOWER BODY COVER

Install in following order.

Gasket-plate-gasket-cover.

NOTE: The two gaskets are not interchangeable.

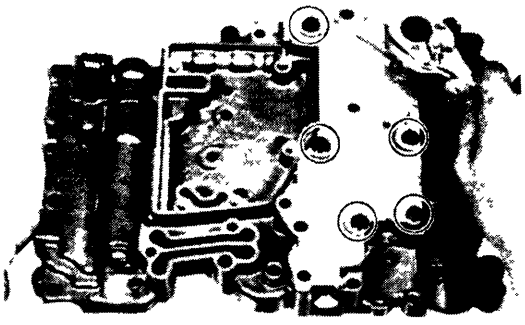

21. INSTALL LOWER BODY COVER SET BOLTS

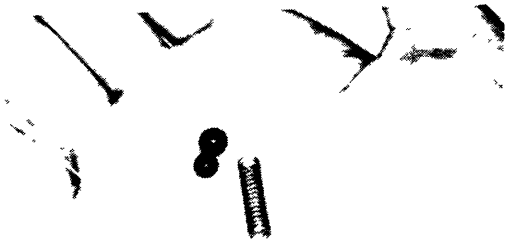

22. IDENTIFY CHECK BALLS AND SPRING

Note the different size of the two rubber check balls. The spring goes with the larger ball for damping.

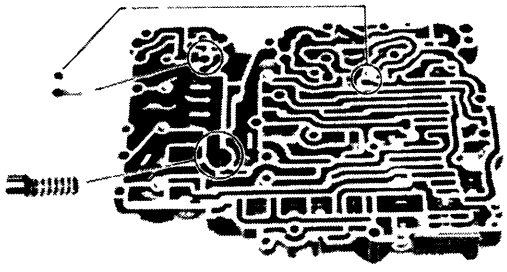

23. INSTALL CHECK BALL, DAMPING CHECK BALL, SPRING, OIL COOLER BY-PASS VALVE AND SPRING

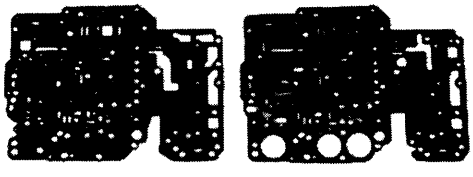

Lower Valve Body Side

24. INSTALL LOWER VALVE BODY GASKET

Note that the two gaskets are not interchangeable. The gasket must lay flat on the valve body.

CAUTION: Make sure that new gasket matches the old one.

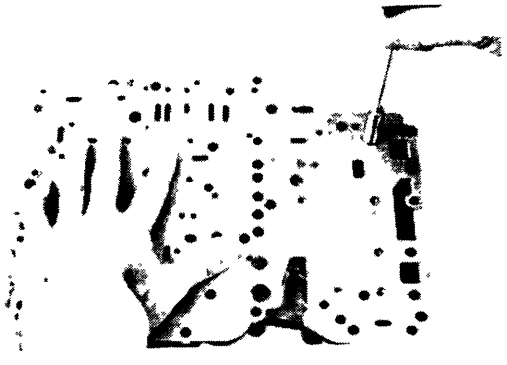

25. INSTALL LOWER VALVE BODY PLATE

Set the plate into place. Temporarily install the two short bolts finger tight to compress the plate against the spring-loaded check valve.

NOTE: Use the bolt for the oil strainer.

(Upper Front Valve Body)

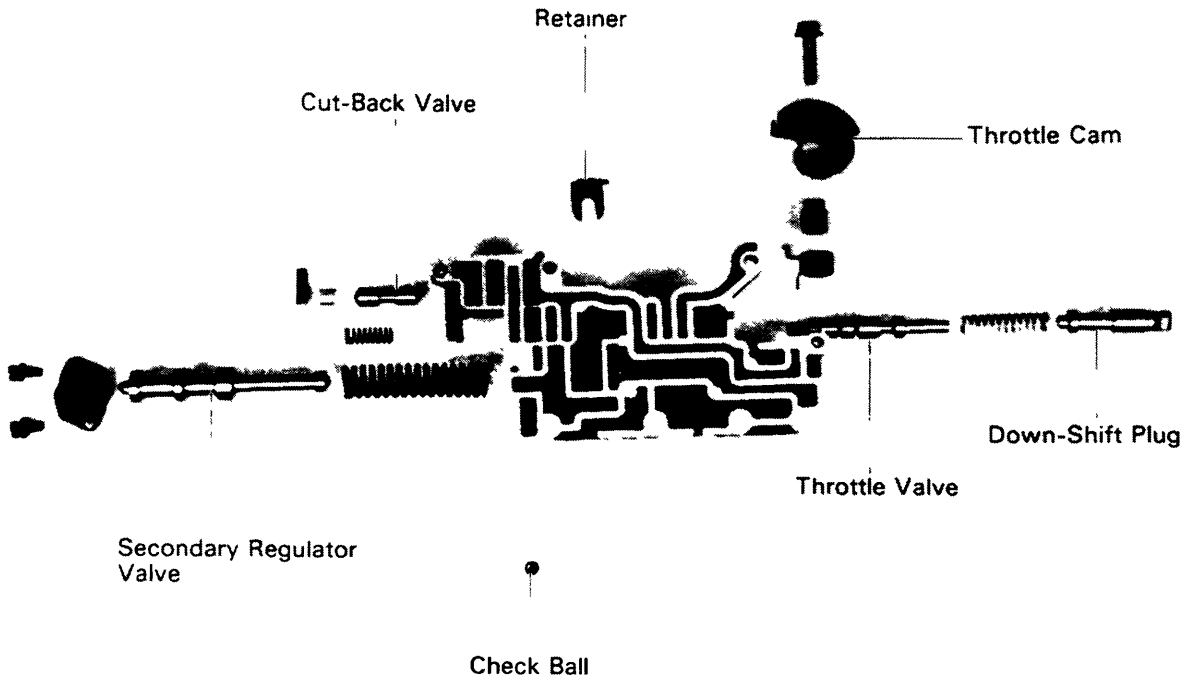

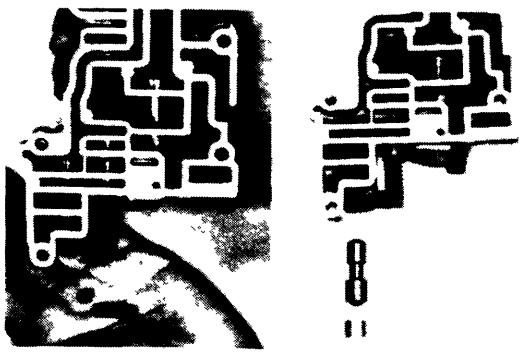

DISASSEMBLY OF UPPER FRONT VALVE BODY

1. **REMOVE CHECK BALL, RETAINER FOR CUT-BACK PLUG AND THROTTLE VALVE RETAINER**
2. **REMOVE PLUG AND CUT-BACK VALVE**

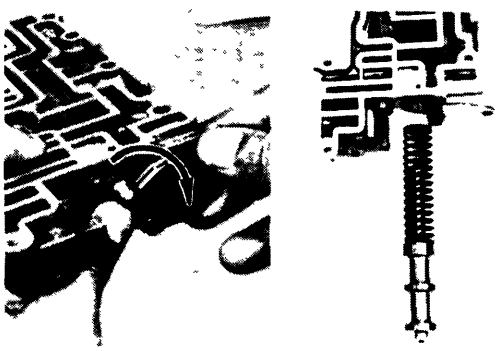

3. **REMOVE SECONDARY REGULATOR VALVE AND SPRING**
   (a) Remove one bolt from the plate over the valve and loosen the other one. Slowly rotate the plate to uncover the valve.

   WARNING: The valve is spring loaded.

   (b) Remove the valve and spring. Keep the spring w the valve.

   (c) Remove the other bolt and remove the cover plate.

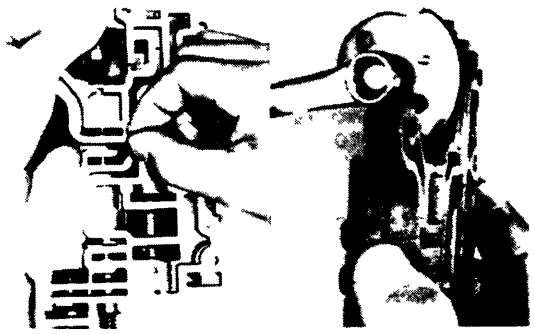

4. **PUSH DOWN-SHIFT PLUG INTO VALVE BODY AND TEMPORARILY HOLD IN THROTTLE VALVE**

   Temporarily hold the throttle valve in position with the cut-back valve plug retainer.

5. **REMOVE THROTTLE CAM**

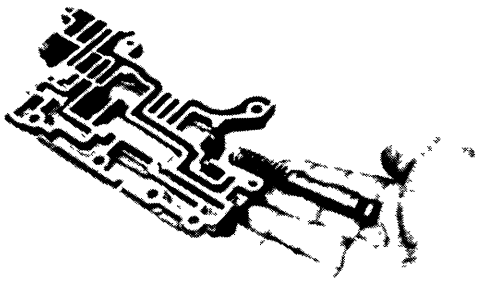

6. **REMOVE DOWN-SHIFT PLUG AND SPRING**

   Press on the down-shift plug so that the temporary retainer falls out.

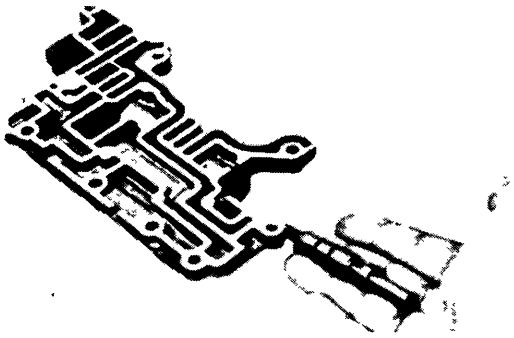

7. **REMOVE THROTTLE VALVE**

8. **REMOVE SPRING AND ADJUSTING RINGS**

   Note the number of adjusting rings installed.

INSPECTION OF UPPER FRONT VALVE BODY

INSPECT VALVE SPRING

Check for damage, squareness, rust and collapsed coils. Measure the spring free height and replace it if less than that shown below.

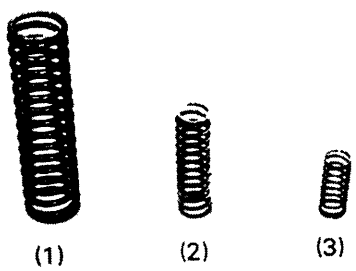

	Free length mm (in.)
(1) Secondary regulator valve	71.27 (2.8059)
(2) Down-shift plug	39.71 (1.5634)
(3) Throttle valve	21.94 (0.8638)

ASSEMBLY OF UPPER FRONT VALVE BODY

(See page AT-78)

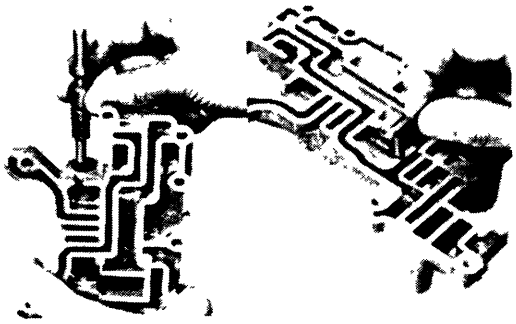

1. INSERT THROTTLE VALVE

Note arrangement in the photo. Make sure that the valve is inserted fully into the bore.

2. INSTALL THROTTLE VALVE RETAINER

Coat the clip with petroleum jelly to keep it in place. Note position on two tabs in the photo. Slip the retainer into place in the valve body.

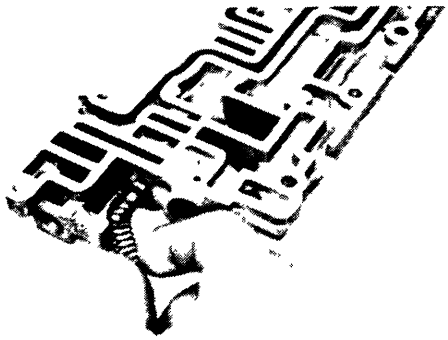

3. INSTALL ADJUSTING RINGS AND SMALL SPRING ON THROTTLE VALVE SHAFT

(a) Install the same number of adjusting rings as were removed during disassembly.

(b) Slip the spring over the end of the valve shaft. Compress the spring and slide it into place.

4. INSERT SPRING AND DOWN-SHIFT PLUG

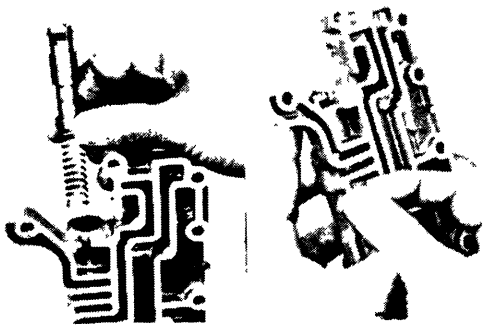

5. TEMPORAILY INSTALL RETAINER OF CUT-BACK PLUG TO HOLD DOWN-SHIFT PLUG IN PLACE

Push the down-shift plug into the valve body and tempora.., install the retainer.

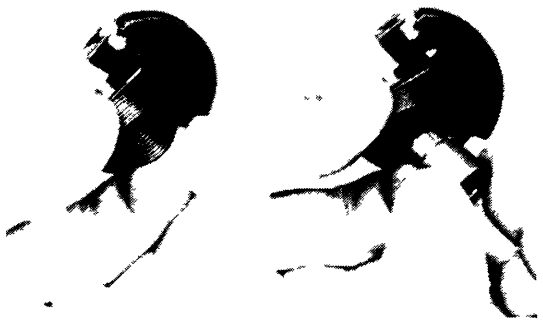

6. ASSEMBLE THROTTLE CAM

(a) Install the spring with the hook through the hole in the cam.

(b) Insert the sleeve through one side of the cam.

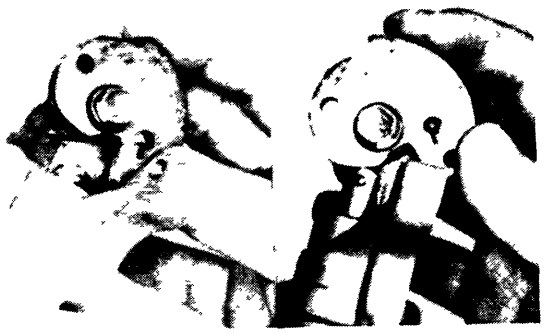

7. INSTALL CAM ASSEMBLY ON UPPER FRONT VALVE BODY

Check the position of the spring ends against the photo. Tighten the bolt.

Torque: 75 kg-cm (65 in.-lb, 7.4 N·m)

8. REMOVE TEMPORARILY INSTALLED RETAINER

Check that the cam rotates smoothly throughout its full stroke.

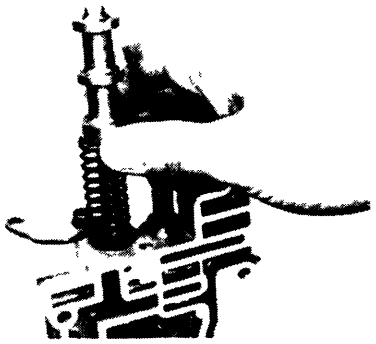

9. INSTALL SECONDARY REGULATOR VALVE

(a) Partially install the cover plate and insert the spring and secondary regulator valve.

(b) Compress the spring and swing the cover plate into place.

(c) Install the second bolt in the cover plate and tighten both bolts.

Torque: 55 kg-cm (48 in.-lb, 5.4 N·m)

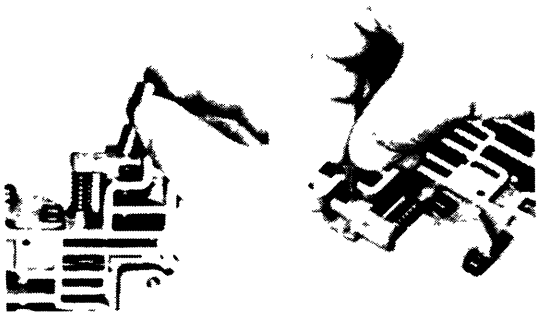

10. INSERT CUT-BACK VALVE AND PLUG

Install the valve with the smaller end first.

11. INSTALL CUT-BACK VALVE RETAINER

Coat the valve with petroleum jelly to keep it in place.

(Upper Rear Valve Body)

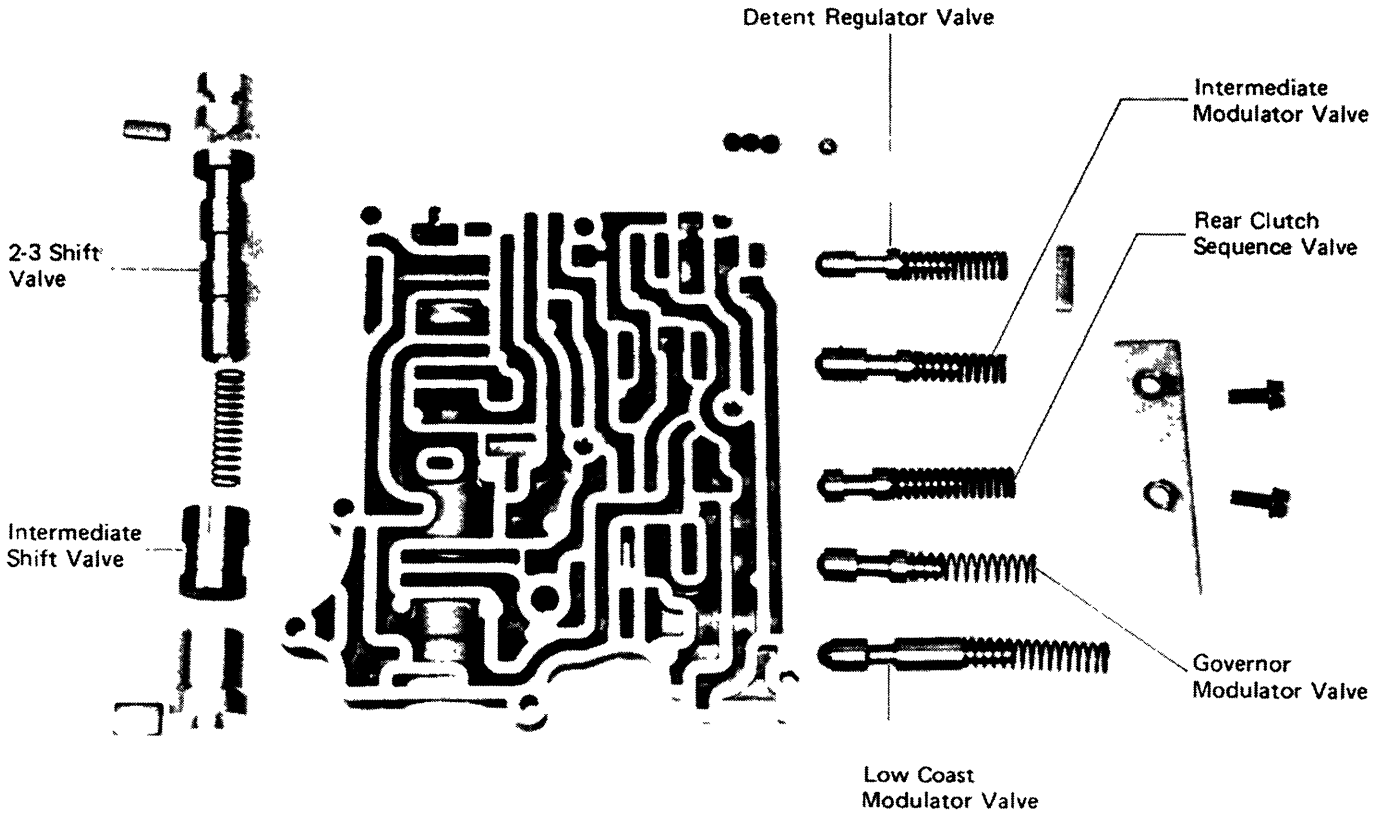

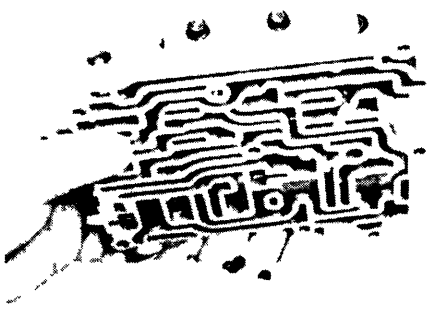

DISASSEMBLY OF UPPER REAR VALVE BODY

1. **REMOVE CHECK BALLS WITH TWEEZERS**
   3 rubber balls and 1 steel ball

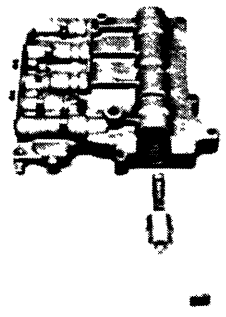

2. **REMOVE INTERMEDIATE SHIFT VALVE RETAINER**
3. **REMOVE PLUG, INTERMEDIATE SHIFT VALVE AND SPRING**

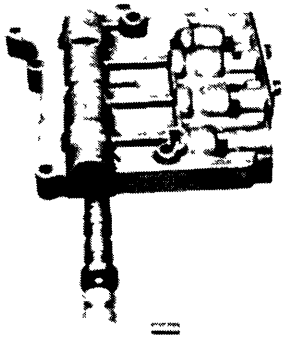

4. **REMOVE 2-3 SHIFT VALVE**
   (a) Remove the 2-3 shift valve retainer.
   (b) Remove the plug and 2-3 shift valve.

5. **REMOVE ONE BOLT FROM VALVE BODY SIDE COVER**

6. **SLIGHTLY ROTATE COVER TO RELEASE LOW-COAST MODULATOR VALVE ONLY**



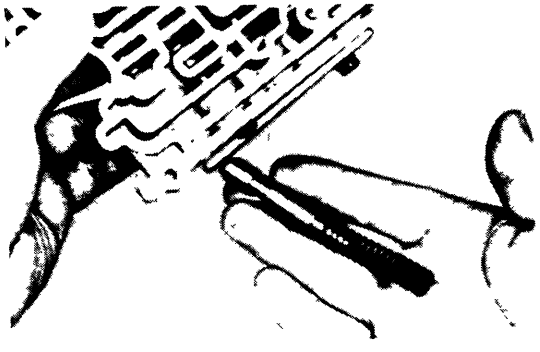

7. **REMOVE SPRING AND LOW-COAST MODULATOR VALVE**

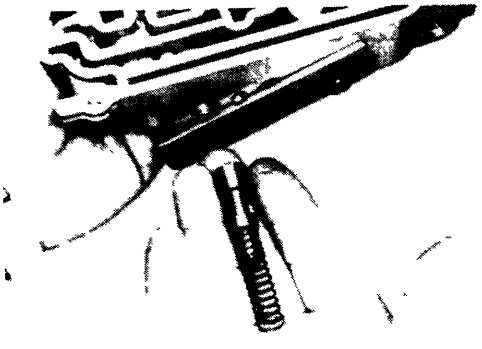

8. **ROTATE COVER FURTHER AND REMOVE SPRING AND GOVERNOR MODULATOR VALVE**

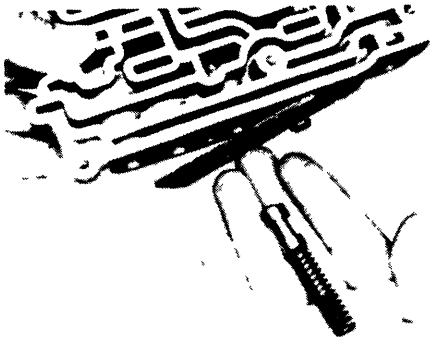

9. **ROTATE COVER FURTHER AND REMOVE SPRING AND REAR CLUTCH SEQUENCE VALVE**

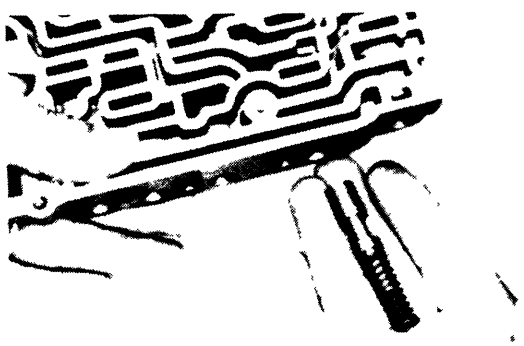

10. **REMOVE COVER PLATE, SPRING AND INTERMEDIATE MODULATOR VALVE**

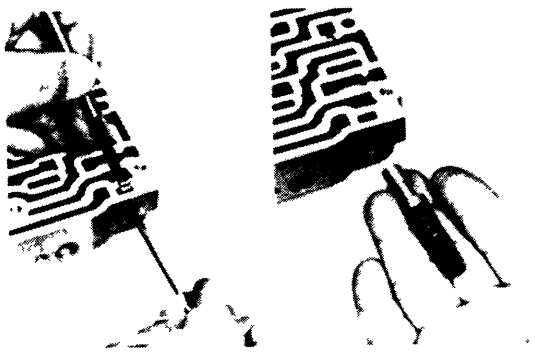

11. **REMOVE DETENT REGULATOR VALVE RETAINER**
12. **REMOVE SPRING AND DETENT REGULATOR VALVE**

INSPECTION OF UPPER REAR VALVE BODY

INSPECT VALVE SPRINGS

Check for damage, squareness, rust and collapsed coil. Measure the spring free height and replace it if less th that shown below.

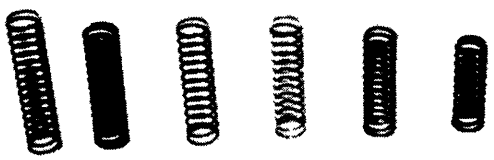

(1) (2) (3) (4) (5) (6)

	Free length mm (in.)
(1) Low-coast modulator valve	42.35 (1.6673)
(2) Reverse clutch sequence valve	37.55 (1.4783)
(3) Governor modulator valve	36.07 (1.4201)
(4) 2-3 shift valve	35.10 (1.3819)
(5) Detent regulator valve	29.93 (1.1783)
(6) Intermediate modulator valve	27.26 (1.0732)

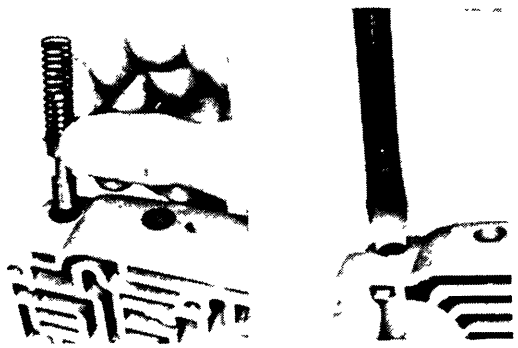

ASSEMBLY OF UPPER REAR VALVE BODY

(See page AT-82)

1. INSTALL DETENT REGULATOR VALVE, SPRING AND RETAINER

Insert the valve (round end first)and spring into the bore. Compress the spring with a large screwdriver and slip the retainer over the edge of the spring. Then compress the spring and allow the retainer to fall into place.

NOTE: Make sure that the retainer fully covers the end of the spring.

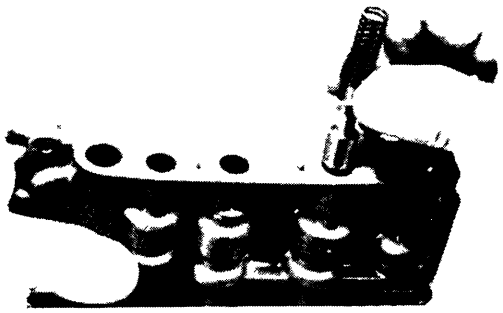

2. INSERT INTERMEDIATE MODULATOR VALVE AND SPRING

Insert the valve with round end first, and then insert the spring.

3. INSTALL VALVE BODY SIDE COVER WITH ONE BOLT

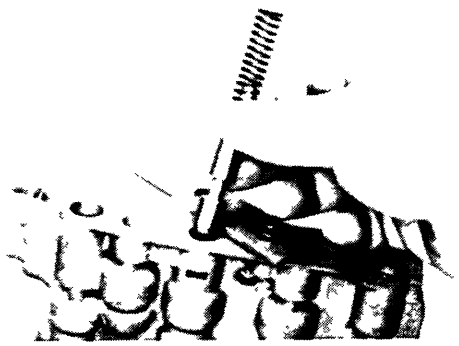

4. INSERT REAR CLUTCH SEQUENCE VALVE AND SPRING

Insert the valve with the round end first. Then insert the spring.

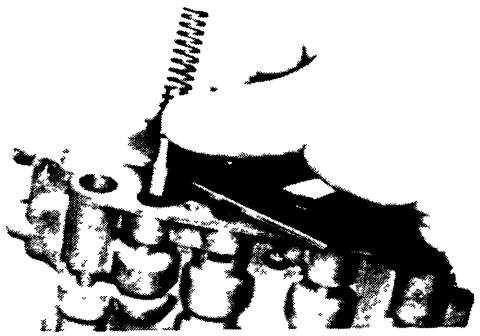

5. INSERT GOVERNOR MODULATOR VALVE AND SPRING

Insert the valve with the round end first. Then insert the spring.

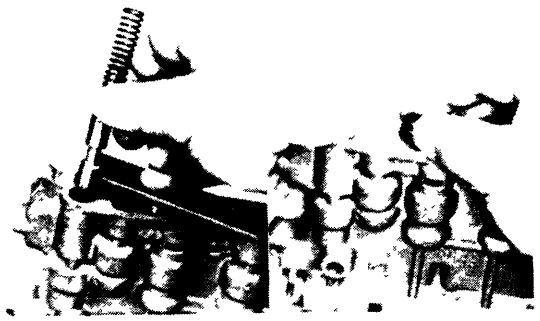

6. INSERT LOW MODULATOR VALVE AND SPRING

Insert the valve with the round end first. Then insert the spring.

7. POSITION COVER AND INSTALL SECOND BOLT

Install the 2nd bolt, and tighten both bolts.

Torque: 55 kg-cm (48 in.-lb, 5.4 N·m)



8. INSERT 2-3 SHIFT VALVE

(a) Insert the 2-3 shitf valve with the smaller end first, and then insert the plug.

(b) Compress the plug and install the intermediate shift valve retainer in the valve body.

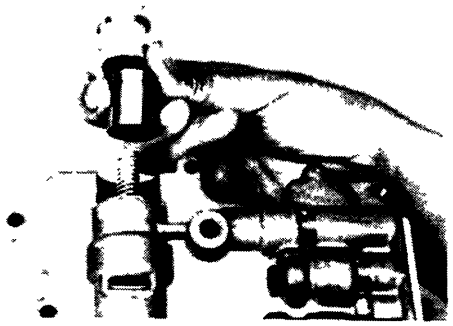

9. INSERT SPRING AND INTERMEDIATE SHIFT VALVE INTO BORE

Insert the valve with the round end up.

10. INSERT PLUG AND RETAINER

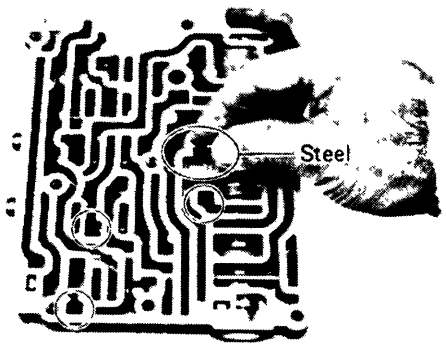

11. INSTALL CHECK BALLS AS SHOWN

Install the steel ball in the position shown in the figure. The three rubber balls are identical and may be installed in any other position.

(Assembly of Valve Body)



1. **POSITION NEW GASKET ON UPPER REAR VALVE BODY**

   Make sure that the new gasket matches the old gasket before installation. Align the gasket at the lower right corner.



2. **PLACE LOWER VALVE BODY WITH PLATE ON TOP OF UPPER REAR VALVE BODY**

   Align the right edge.

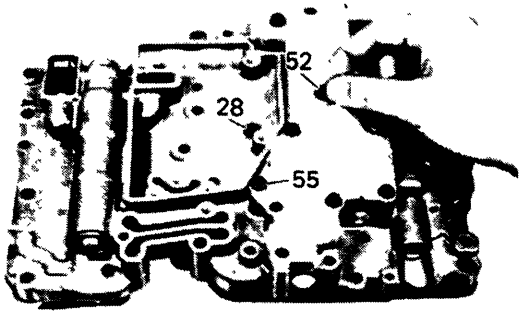

3. **INSTALL AND FINGER TIGHTEN THREE BOLTS IN LOWER VALVE BODY TO SECURE UPPER REAR VALVE BODY**

   NOTE: Each bolt length (mm) is indicated in the figure.

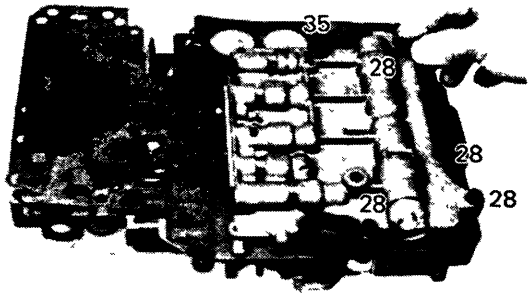

4. **TURN ASSEMBLY OVER, CHECK GASKET ALIGNMENT AND FINGER TIGHTEN FIVE BOLTS IN UPPER REAR VALVE BODY**

   NOTE: Each bolt length (mm) is indicated in the figure.

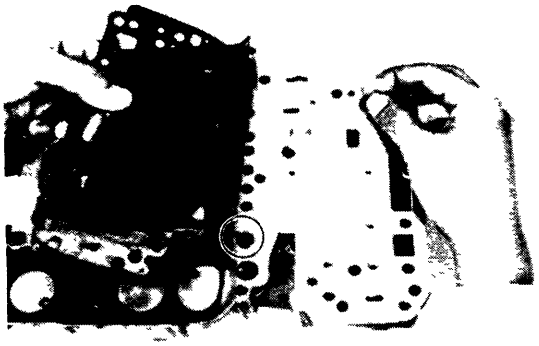

5. **REMOVE TEMPORARY BOLTS FROM PLATE**

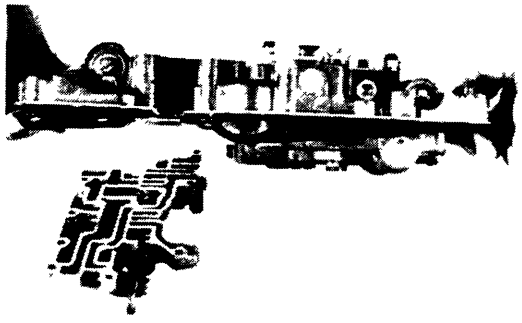

6. **PLACE LOWER AND UPPER REAR VALVE BODY ASSEMBLY ON TOP OF UPPER FRONT VALVE BODY**

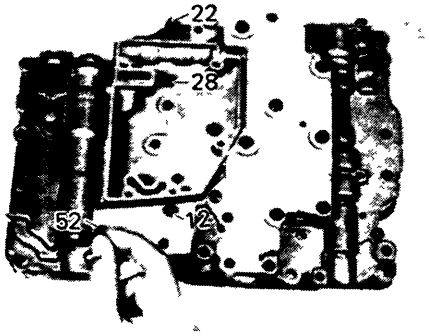

7. **INSTALL SMALL COVER**

8. **FINGER TIGHTEN SET BOLTS IN LOWER VALVE BODY TO SECURE UPPER FRONT VALVE BODY**

   NOTE: Each bolt length (mm) is indicated in the figure.

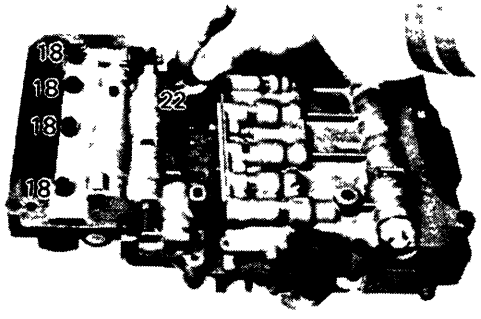

9. **TURN ASSEMBLY OVER AND FINGER TIGHTEN FIVE BOLTS IN UPPER FRONT VALVE BODY**

   NOTE: Each bolt length (mm) is indicated in the figure.

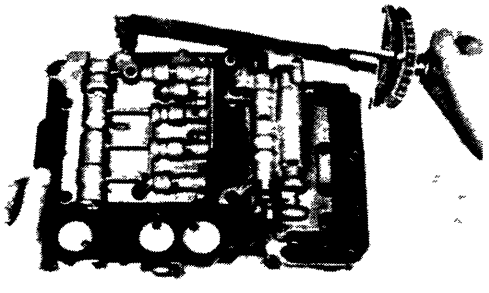

10. **TIGHTEN BOLTS IN UPPER FRONT AND REAR VALVE BODIES**

    Recheck alignment of the gaskets. Tighten the bolts.

    Torque: 55 kg-cm (48 in.-lb, 5.4 N·m)

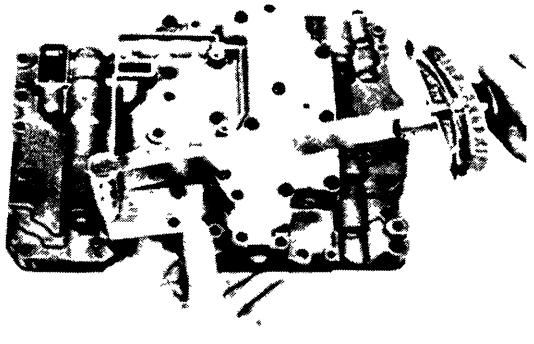

11. **TURN ASSEMBLY OVER AND TIGHTEN BOLTS IN LOWER VALVE BODY**

    Tighten the bolts.

    Torque: 55 kg-cm (48 in.-lb, 5.4 N·m)

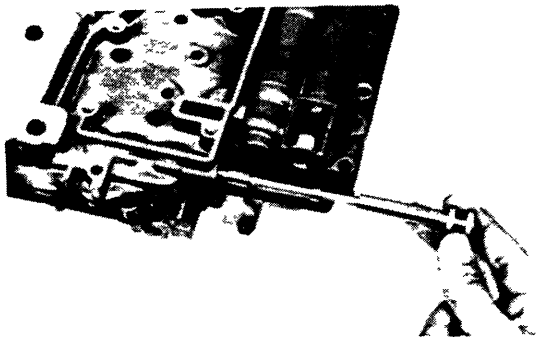

12. INSERT MANUAL VALVE

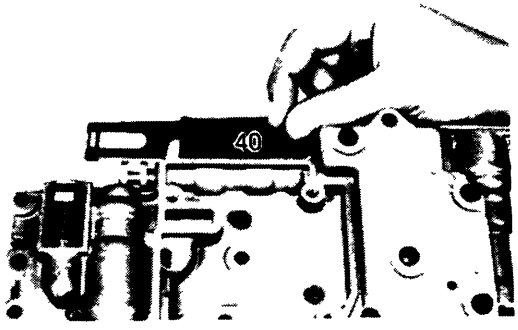

13. INSTALL DETENT SPRING

Tighten the bolts.

Torque: 55 kg-cm (48 in.-lb, 5.4 N·m)

Governor Body

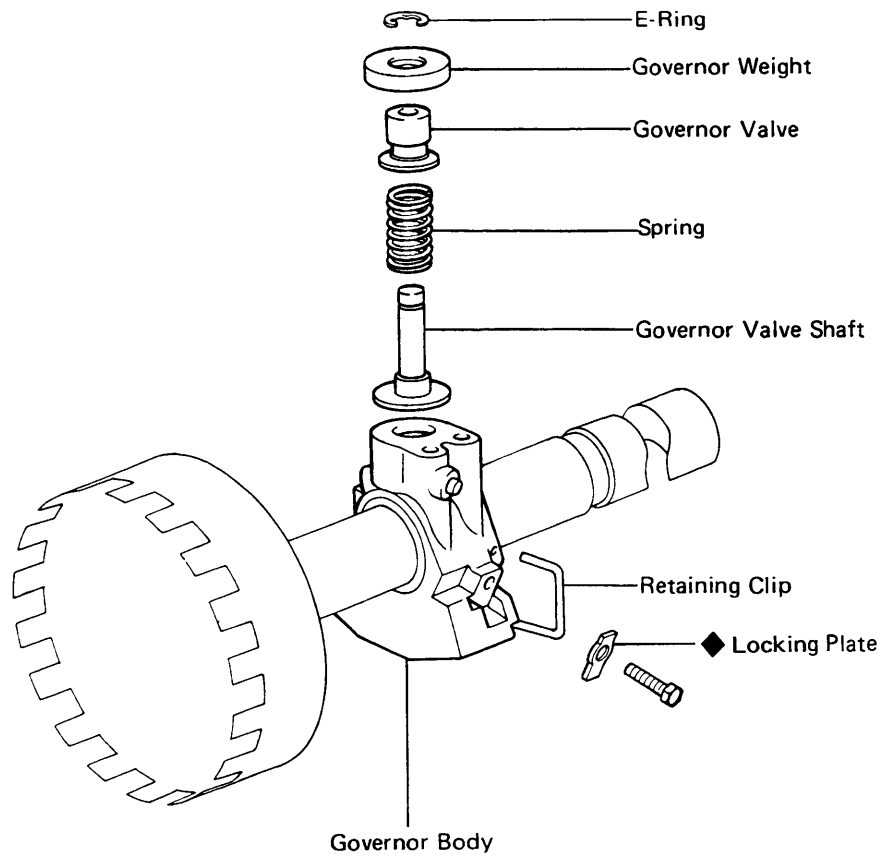

◆ : Non-reusable part

AT0014

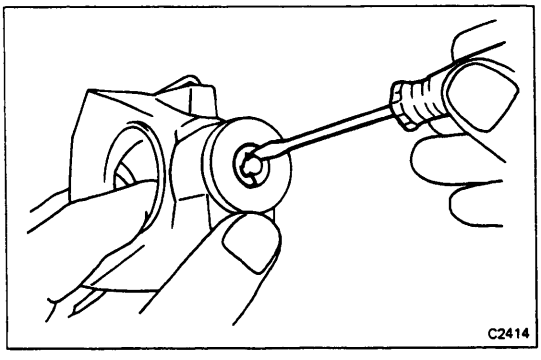

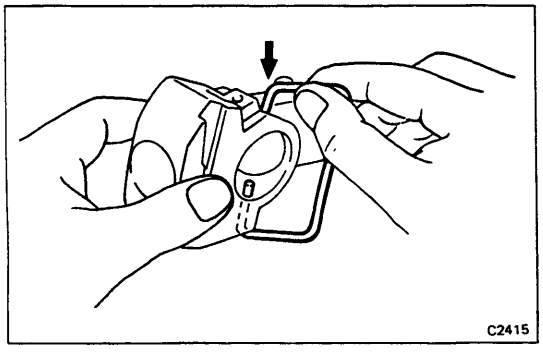

DISASSEMBLY OF GOVERNOR BODY

1. **REMOVE E-RING AND GOVERNOR WEIGHT**

   Compress the spring by pushing up on the shaft and down on the weight. Remove the E-ring with a screwdriver. Lift off the governor weight.

2. **REMOVE GOVERNOR VALVE**

   Slide it down through the bore.

3. **REMOVE RETAINING CLIP**

   Remove the end, indicated by an arrow, being careful not to scratch the governor body.

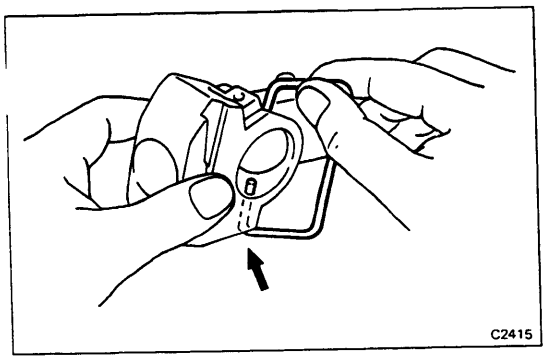

ASSEMBLY OF GOVERNOR BODY

(See page AT-112)

1. **INSTALL RETAINING CLIP**

Install the clip end, indicated by an arrow, being careful not to scratch the governor body.

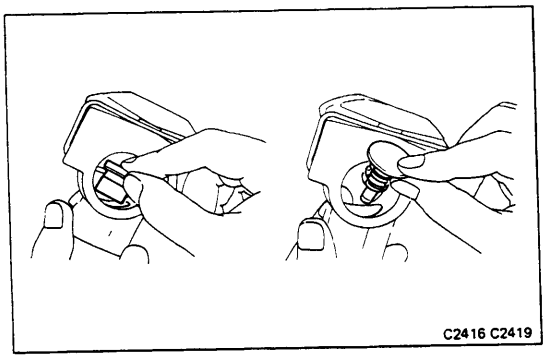

2. **INSTALL GOVERNOR VALVE, SPRING AND SHAFT**

(a) Slide down the governor valve through the bore.

(b) Slide down the spring and shaft through the bore.

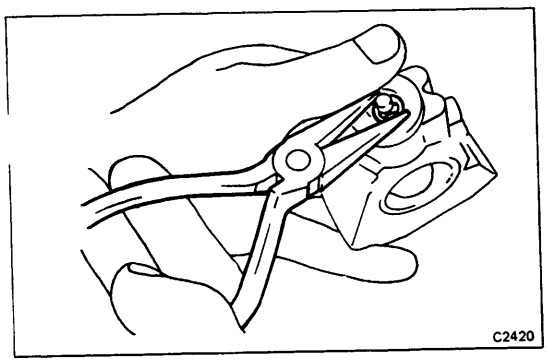

3. **INSTALL GOVERNOR WEIGHT AND E-RING ON SHAFT**

(a) Install the governor weight.

(b) Compress the spring, and install the E-ring on the shaft with needle-nose pliers. Make sure that it is fully seated in the groove.

NOTE: Make sure that the valve moves smoothly.

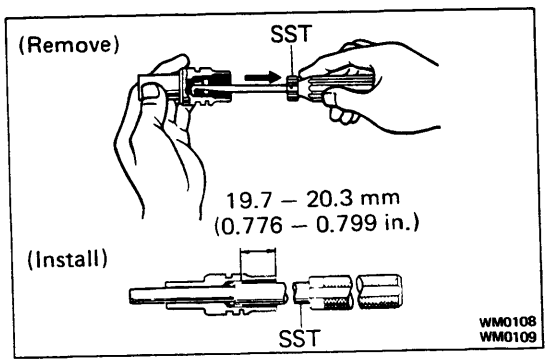

Extension Housing

INSPECTION OF SPEEDOMETER GEAR AND EXTENSION HOUSING

1. **IF NECESSARY, REPLACE SPEEDOMETER GEAR OIL SEAL**

(a) Using SST, remove the oil seal.

SST 09921-10010

(b) Using SST, install a new oil seal.

SST 09201-60011

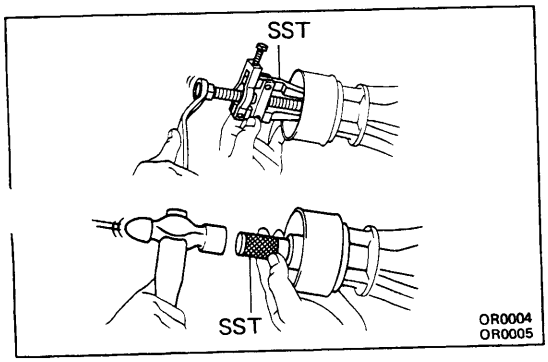

2. **IF NECESSARY, REPLACE OIL SEAL AND DUST SEAL**

(a) Using SST, remove the oil seal.

SST 09308-00010

(b) Using SST, drive in a new oil seal and dust seal.

SST 09325-20010

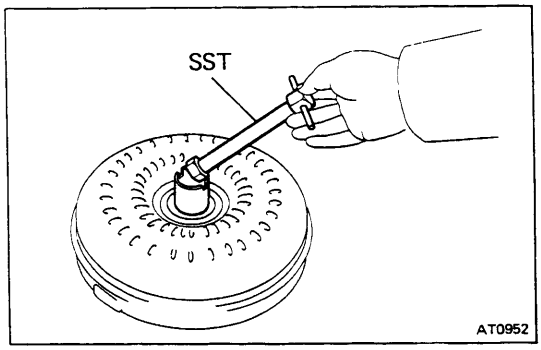

Torque Converter

CLEAN TORQUE CONVERTER

If the transmission is contaminated, the torque converter and transmission cooler should be thoroughly flushed, using Toyota Transmission Cleaner.

INSPECTION OF TORQUE CONVERTER

1. INSERT SST IN END OF TORQUE CONVERTER

(a) Insert a turning tool in to the inner race of the one-way clutch.

(b) Insert the stopper so that it fits in the notch of the converter hub and other race of the one-way clutch.

SST 09350-20013

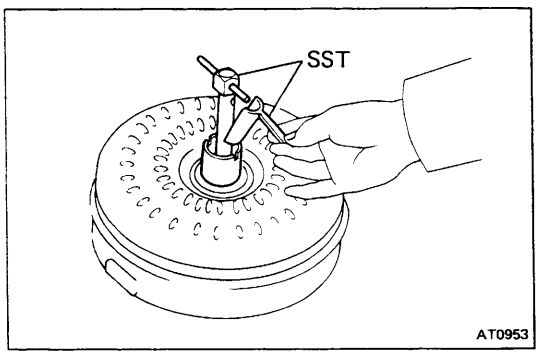

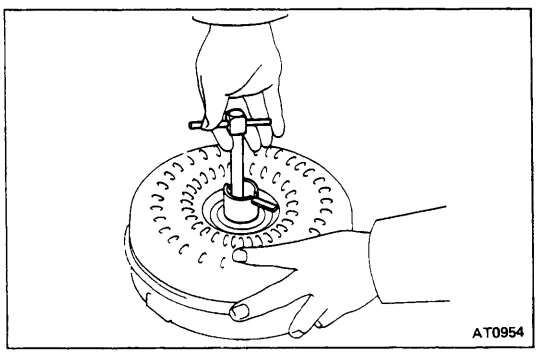

2. TEST ONE-WAY CLUTCH

The clutch should lock when turned counterclockwise, and should rotate freely and smoothly clockwise. Less than 25 kg-cm (22 in.-lb, 2.5 N·m) of torque should be required rotate the clutch clockwise. If necessary, clean the co, verter and retest the clutch. Replace the converter if the clutch still fails the test.

Electrical Parts

1. INSPECT OVERDRIVE SOLENOID

Check the resistance between the terminal and body.

Standard resistance: About 13 Ω

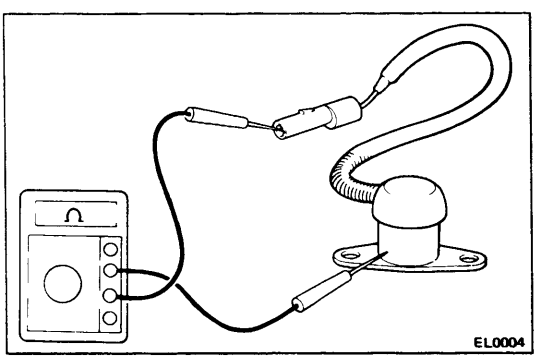

2. INSPECT NEUTRAL START SWITCH

Using an ohmmeter, check the continuity of the terminals for each switch position shown in the table below.

If continuity between the terminals is not as specified, replace the switch.

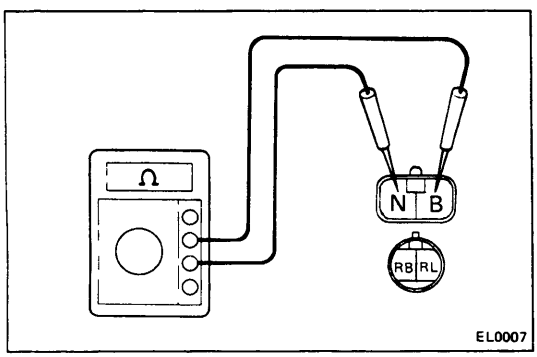

Terminal / Range	B	N	RB	RL
P	○—○			
R			○—○	
N	○—○			

ASSEMBLY OF TRANSMISSION

Disassembly, inspection and assembly of each component group have been indicated in the preceding chapter. Before assembly, make sure again that all component groups are assembled correctly.

If something wrong is found in a certain component group while assembly, inspect and repair this group immediately.

GENERAL ASSEMBLY NOTES:

1. The automatic transmission is composed of highly precision-finished parts, necessitating careful inspection before assembly because even a small nick could cause fluid leakage or affect performance.
2. Before assembling new clutch discs, soak them in automatic transmission fluid for at least two hours.
3. Apply automatic transmission fluid on sliding or rotating surfaces of the parts before assembly.
4. Use petroleum jelly to keep the small parts in their places.
5. Do not use adhesive cements on gaskets and similar parts.
6. When assembling the transmission, be sure to use new gaskets and O-rings.
7. Dry all parts by blowing with compressed air. Never use shop rags.
8. Be sure to install the thrust bearings and races in the correct direction and position.

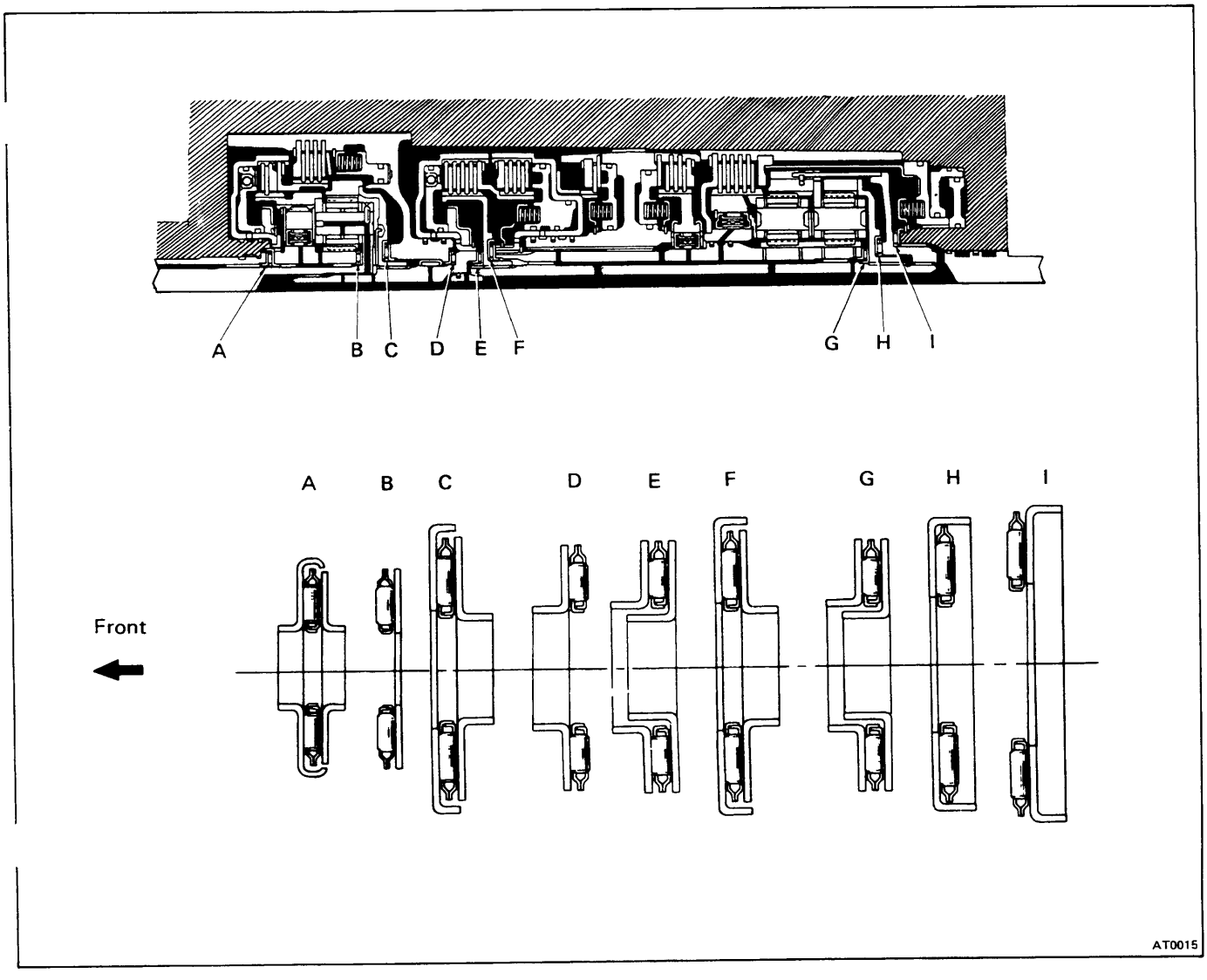

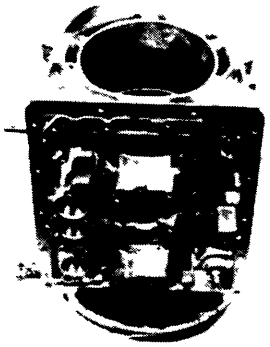

1. **PLACE TRANSMISSION CASE ON CYLINDER**

Place the transmission on a cylindrical stand for more efficient work.

CAUTION: Place shop rags between the case and stand to avoid damaging the case.

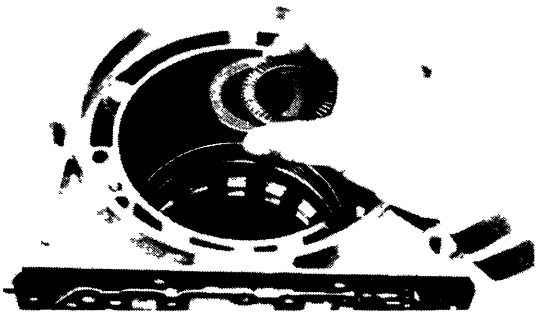

2. **INSTALL THRUST WASHER AND BEARING**

Install the thrust washer, facing the cup side downward.

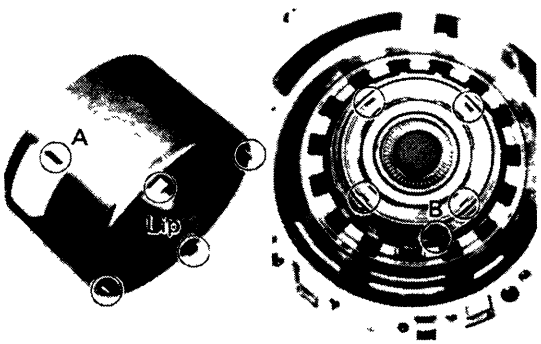

3. **INSTALL APPLY TUBE ONTO OUTER PISTON OF REAR BRAKE PISTONS**

Install the tube, aligning its locking tab (part A) with part B of the case.

NOTE: Make sure that the lips of the tube end are completely inserted onto the outer piston.

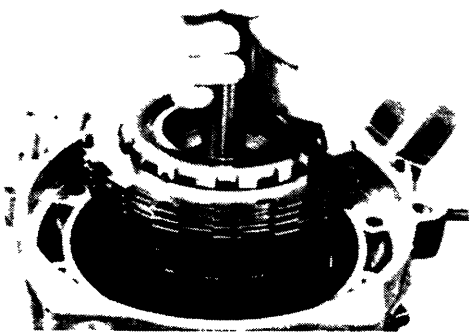

4. **PARTIALLY INSERT OUTPUT SHAFT ASSEMBLY INTO CASE**

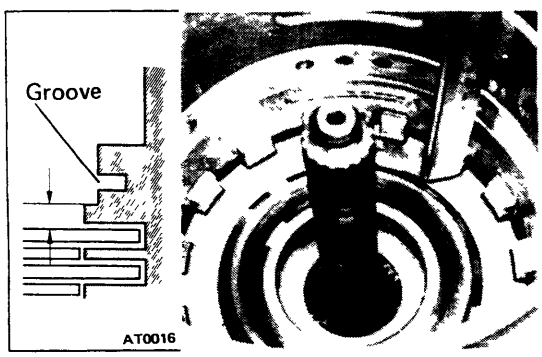

5. **CHECK CLUTCH PACK CLEARANCE**

With the case in upright position, make sure that the clutch pack is lower than the ledge below the snap ring groove.

If the clutch pack is not lower than the ledge, components may be misassembled or there may be excess ATF on the discs.

Standard clearance: 0.61 — 2.64 mm (0.0240 — 0.1039 in.)

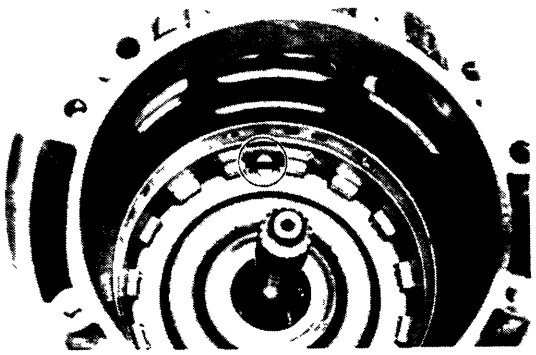

6. INSTALL REACTION PLATE

Position the notched tooth of the reaction plate toward the valve body side of the case. Push it into place.

NOTE: The reaction plate is correctly installed if the snap ring groove is fully visible.

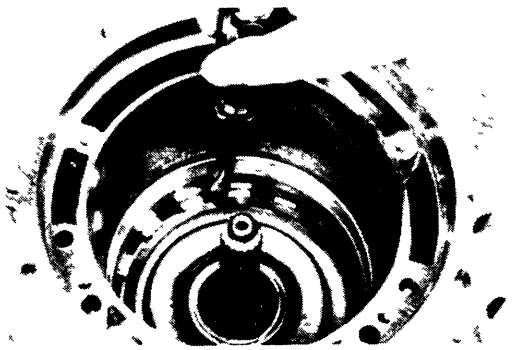

7. INSTALL SNAP RING

Use a large screwdriver to compress the snap ring. Push it into place by hand. Work around the case. Visually check to make sure that the ring is fully seated. Make sure that the ends of the snap ring are between the lugs.

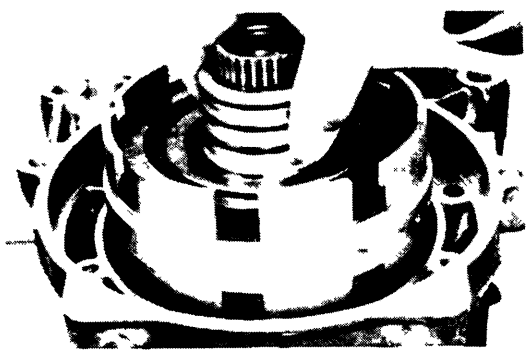

8. PUSH CENTER SUPPORT ASSEMBLY INTO CASE

Align the oil hole and bolt hole of the center support with those of the body side and insert the center support.

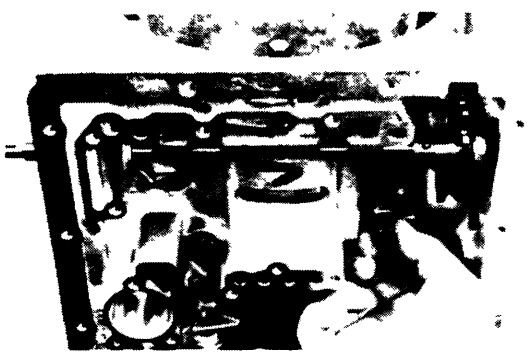

9. INSTALL TWO CENTER SUPPORT BOLTS WITH WAVE WASHERS

Align the center support with holes in the case and install the two bolts finger tight.

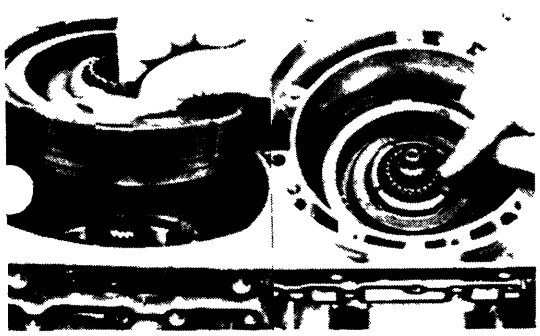

10. INSTALL REAR CLUTCH IN CASE

Rotate the clutch to mesh the hub with the center support.

11. CHECK FOR CORRECT INSTALLATION OF REAR CLUTCH

If the rear clutch is fully meshed with the center support, the splined center of the clutch will be flush with the end of the sun gear shaft.

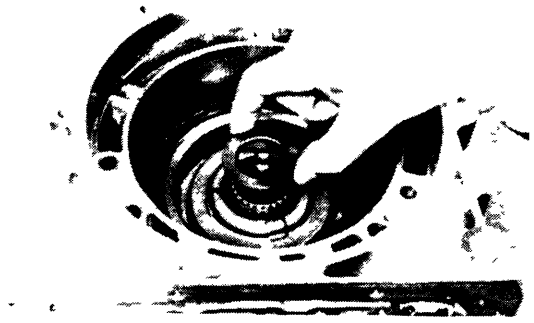

12. INSTALL THRUST BEARING RACE OVER SPLINED END OF REAR CLUTCH IN CASE

Coat parts with petroleum jelly to keep them in place. Pc tion the lip of the race toward the rear clutch.

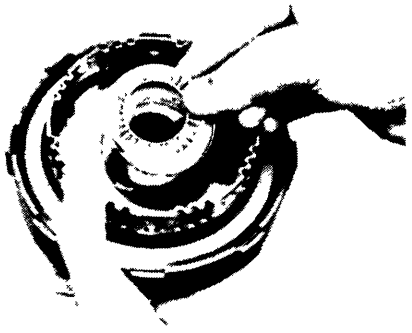

13. INSTALL THRUST BEARING AND RACE ON FRONT CLUTCH

Coat parts with petroleum jelly to keep them in the place. Position the lip of the race outward.

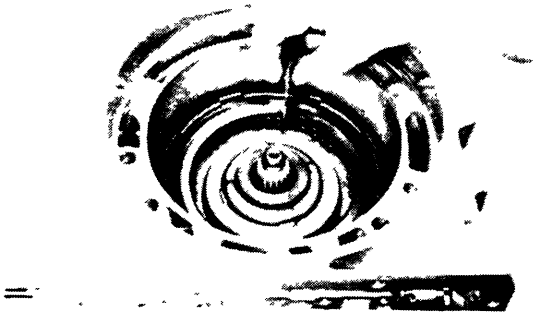

14. INSTALL FRONT CLUTCH ASSEMBLY IN CASE

Align flukes of the rear clutch discs and mesh them with the front clutch hub. Push the front clutch assembly into the case.

CAUTION: Be careful that the thrust bearing does not fall out.

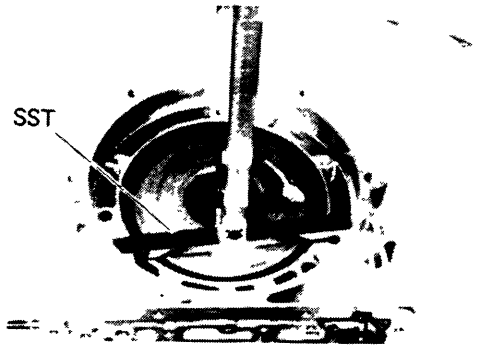

15. CHECK CORRECT INSTALLATION OF FRONT CLUTCH

Set SST on the transmission case as shown in the figure. Mesure the distance between the top surface of SST and front clutch assembly. If the distance corresponds to that during disassembly, the front clutch is installed correctly.

SST 09350-20013

Height: Measured value minus SST width = Approx. 2 mm (0.08 in.)

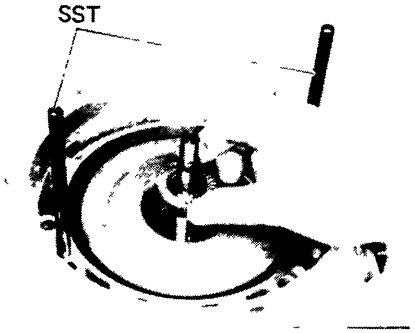

16. INSTALL SST ON CASE

Finger tighten the SST on the transmission case.

SST 09350-20013

17. INSTALL THRUST BEARING ON FRONT CLUTCH

Coat the thrust bearing with petroleum jelly and set it i· place.

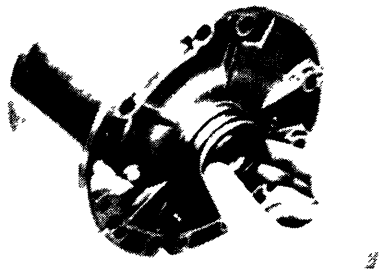

18. INSTALL THRUST WASHER ON OVERDRIVE CASE END

Coat the thrust washer with petroleum jelly and set it into place, facing the lip side toward the overdrive case.

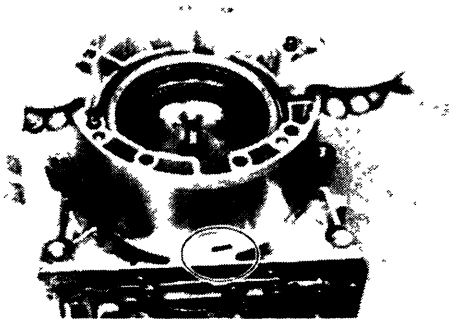

19. INSERT OVERDRIVE CASE INTO TRANSMISSION CASE

Insert the overdrive case gently through the two guide pins with the circled part in the figure facing in the direction indicated.



20. INSTALL THRUST WASHER

Coat the thrust washers with petroleum jelly. Install the thrust washer on the overdrive planetary carrier.

NOTE: The washer lugs should be inserted in the holes.

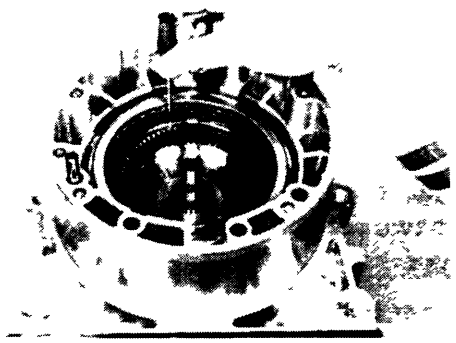

21. INSTALL OVERDRIVE CLUTCH IN CASE

Align of discs the flukes in the overdrive case. Align the flukes with the slots of the overdrive clutch and press the overdrive clutch into the overdrive case.

CAUTION: Be careful that the thrust washer does not fall out.

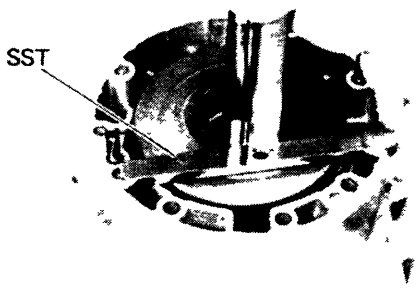

22. CHECK CORRECT INSTALLATION OF OVERDRIVE CLUTCH

Set SST on the overdrive case as shown in the figure. Measure the distance between the top surface of SST and overdrive clutch. If the distance corresponds to that during disassembly, the overdrive clutch is installed correctly.

SST 09350-20013

Height: Measured value minus SST width = (Others) Approx. 3.5 mm (0.138 in.)

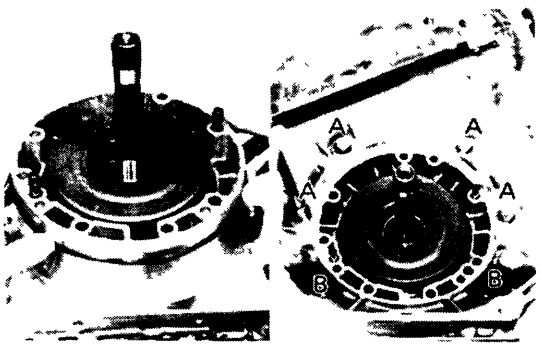

23. INSTALL O-RING ON OVERDRIVE CASE

24. INSTALL CONVERTER HOUSING

Torque: A bolts 345 kg-cm (25 ft-lb, 34 N·m)
B bolts 580 kg-cm (42 ft-lb, 57 N·m)

Install the two 12 — mm bolts (B) and four 10 — mm bolts (A), and tighten them.

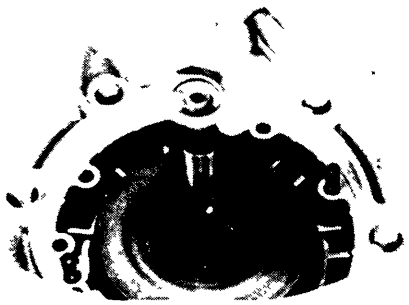

25. INSTALL THRUST WASHER AND BEARING ON OVERDRIVE CLUTCH

Coat the thrust washer with petroleum jelly. Install the thrust washer facing the lip side outward together with the bearing.

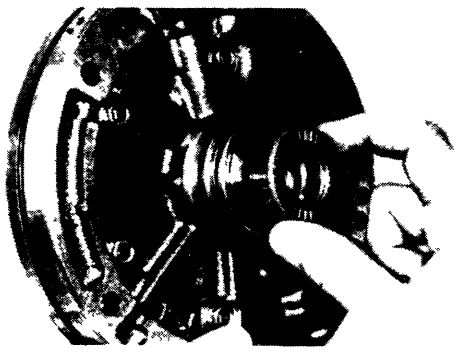

26. INSTALL THRUST WASHER ON OIL PUMP

Coat the thrust washer with petroleum jelly and install the lip side toward the pump body.

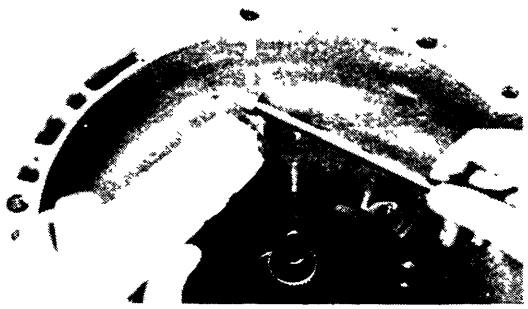

27. INSTALL OIL PUMP

(a) Install the oil pump gently through the two guide bolts, being careful that the thrust washer does not fall out.

(b) Coat the five set bolts with seal packing, and finger tighten them.

(c) Using a screwdriver, remove the SST. In the place of it, install the two set bolts coated with seal packing.

SST 09350-20013

(d) Tighten the set bolts gradually and evenly.

Torque: 215 kg-cm (16 ft-lb, 21 N·m)

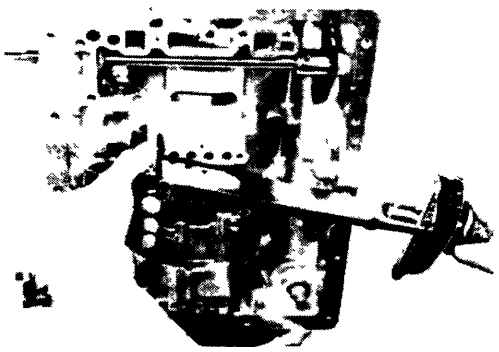

28. TIGHTEN TWO CENTER SUPPORT BOLTS

Tighten the bolts alternately in 70 kg-cm (61 in.-lb) increments.

Torque: 260 kg-cm (19 ft-lb, 25 N·m)

NOTE: First tighten the accumulator side bolt.

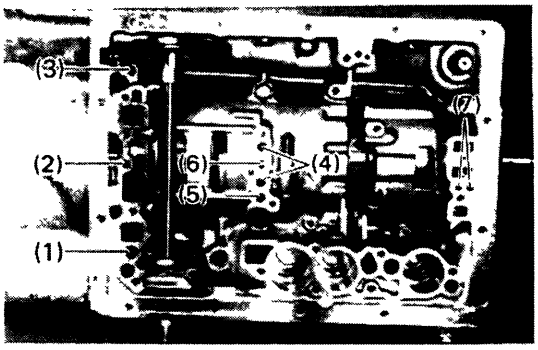

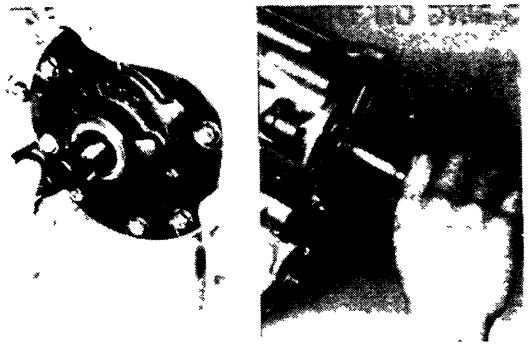

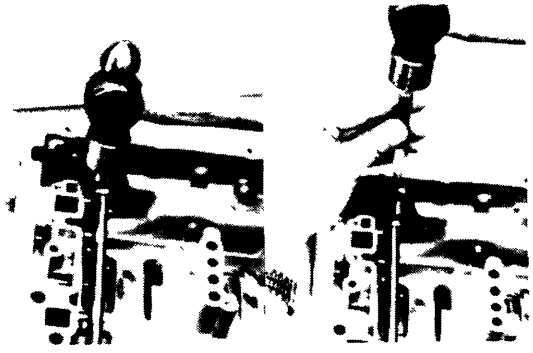

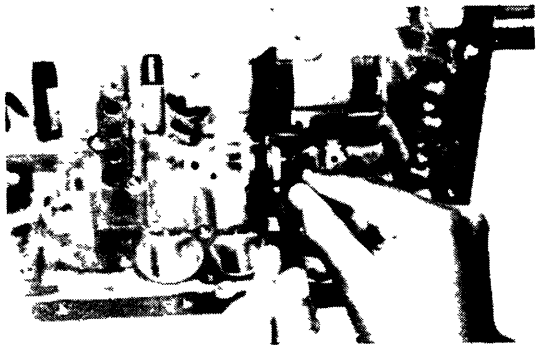

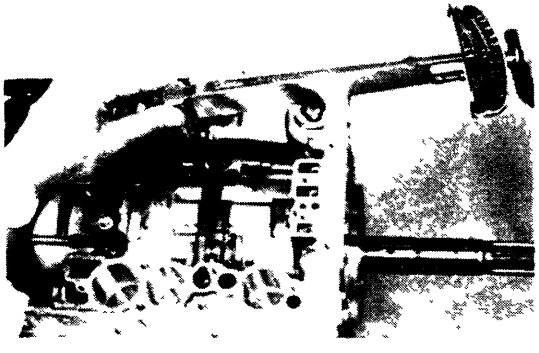

29. CHECK OPERATION OF PISTONS

Blow low-pressure compressed air into the passages indicated in the photo and listen for noise from piston movement.

(1) Overdrive clutch

(2) Overdrive brake

(3) Front clutch

(4) Rear clutch

(5) Brake No.1

(6) Brake No.2

(7) Brake No.3

If the pistons do not move, disassemble and inspect them.

30. CHECK INPUT SHAFT AND OUTPUT SHAFT

(a) Make sure that the input shaft has play in axial direction and that it turns.

(b) Make sure that the output shaft has thrust play in axial direction.

Thrust play: 0.3 — 0.9 mm (0.012 — 0.035 in.)

31. IF NECESSARY, INSTALL MANUAL VALVE LEVER SHAFT INTO CASE

(a) Assemble the new collar to the manual valve lever.

NOTE: Always replace the collar and roll pin with a new one. Never reuse a pin after it has been removed.

(b) Install the manual valve lever shaft to the transmission case through the manual valve lever.

(c) Drive in a new roll pin with the slot at a right angle to the shaft.

(d) Match the collar hole to the lever calking hollow and calk the collar to the lever.

32. INSTALL PARKING LOCK PAWL, PIVOT PIN AND SPRING IN CASE

33. INSTALL PARKING LOCK PAWL BRACKET ON CASE

Make sure the collar on the control rod is toward the front of the transmission.

Tighten the two bolts. Make sure the pawl moves freely.

NOTE: Be careful, as it is possible for bracket to be installed too far forward, where it will bind the pawl.

Torque: 75 kg-cm (65 in.-lb, 7.4 N·m)

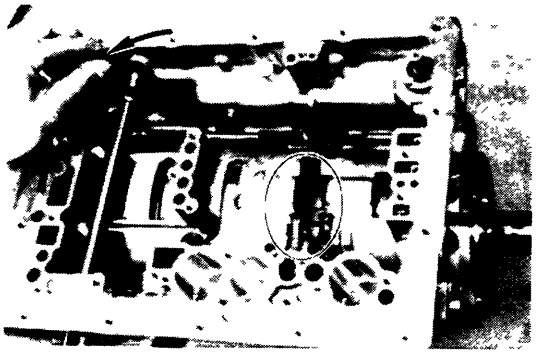

34. CHECK OPERATION OF PARKING LOCK PAWL

Make sure the planetary gear output shaft is locked when the manual valve lever is in the "P" range.

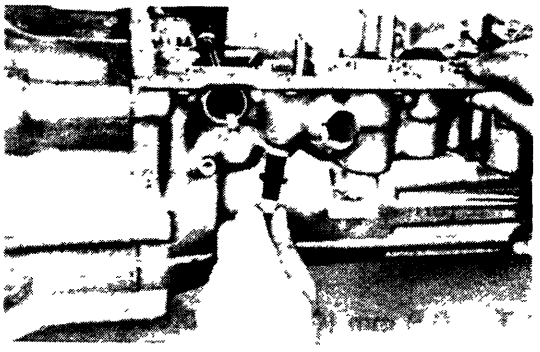

35. INSTALL NEW O-RING ON THROTTLE CABLE FITTING

36. INSTALL THROTTLE CABLE IN CASE

Push the cable through the case, being careful not to damage the O-ring. Check for full seating.

CAUTION: In subsequent work, do not roll the case over the cable and break the cable fitting.

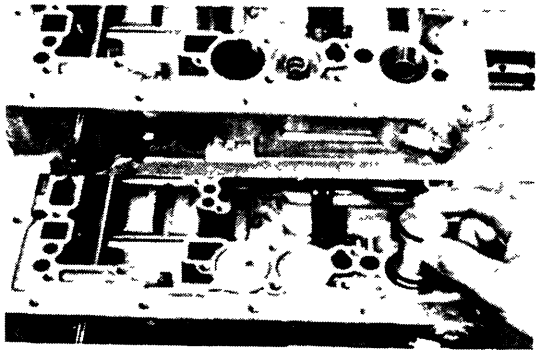

37. INSTALL ACCUMULATOR PISTON AND SPRINGS

Spring

mm (in.)

	E/G	Free length	Outer diameter	No	Wire diameter
B_2	22R	66.50 (2.6180)	17.91 (0.7051)	13.5	2.60 (0.102[illegible])
	22R-E	66.68 (2.6252)	16.36 (0.6441)	14.5	2.60 (0.1024)
C_2	All	55.18 (2.1724)	15.87 (0.6248)	8.5	2.00 (0.0787)
C_1	22R	68.56 (2.6992)	17.53 (0.6902)	15.5	2.03 (0.0800)
	22R-E	64.80 (2.5512)	17.20 (0.6772)	13	2.00 (0.0787)

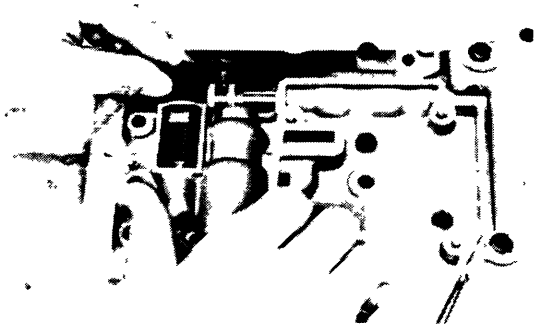

38. PLACE VALVE BODY ON TRANSMISSION

Make sure the accumulator pistons are pressed fully into the bore. Align the manual valve with the pin on the manual valve lever, and lower valve body into place.



39. LIFT SIDE OF VALVE BODY AND ATTACH THROTTLE CABLE

While holding the cam down by hand, slip the cable end into the slot.

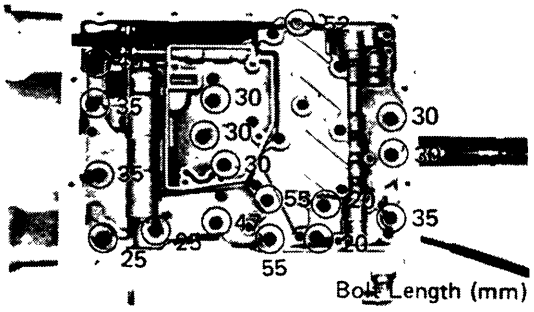

40. INSTALL BOLTS IN VALVE BODY

Install the bolts as shown.

NOTE: Each bolt length (mm) is indicated in the figure.

Torque: 100 kg-cm (7 ft-lb, 10 N·m)

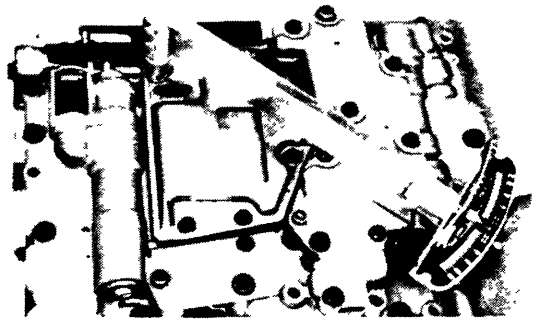

41. INSTALL OIL STRAINER AND BOLTS

Install the small plate and oil strainer.

Torque: 55 kg-cm (48 in.-lb, 5.4 N·m)

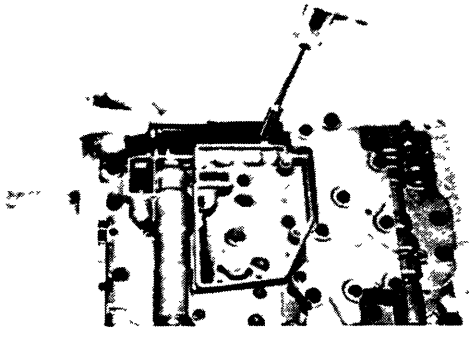

42. INSTALL DETENT SPRING

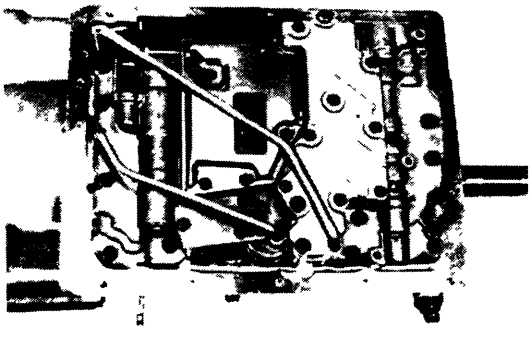

43. INSTALL OIL TUBES

Using a plastic hammer, install the tubes into the position indicated in the photo.

CAUTION: Be careful not to bend or damage the tubes.

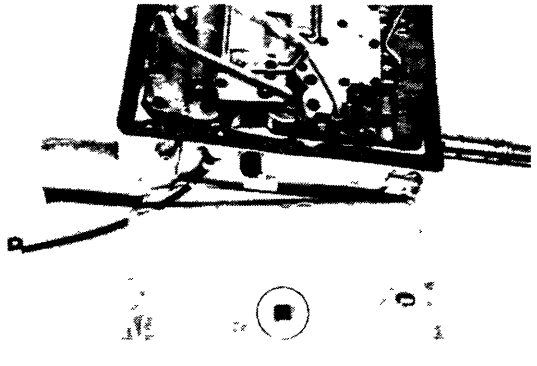

44. INSTALL MAGNETS IN PAN AND INSTALL OIL PAN WITH NEW GASKET

(a) Install the magnets in the pan.

CAUTION: Make sure that the magnets do not interfere with the oil tubes.

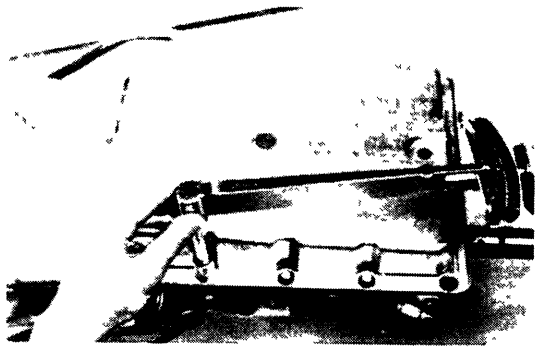

(b) Align the cut part of the gasket and case.

Torque: 45 kg-cm (39 in.-lb, 4.4 N·m)

45. INSTALL DRAIN PLUG WITH NEW GASKET

Torque: 205 kg-cm (15 ft-lb, 20 N·m)

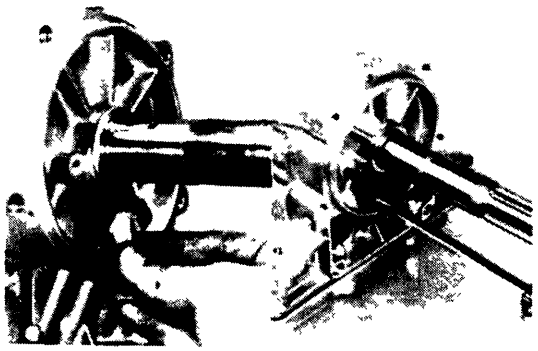

46. INSTALL GOVERNOR LINE STRAINER

(a) Install the strainer onto the case.

(b) Install the plate.

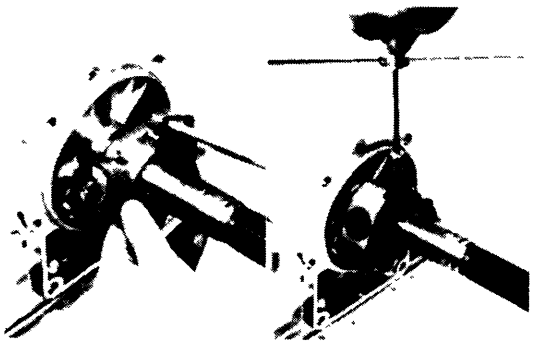

47. INSTALL GOVERNOR BODY AND SPEEDOMETER DRIVE GEAR ON OUTPUT SHAFT

(a) While lifting the retaining clip with a large screwdriver, slide the governor body and insert the retaining r end into the hole on the output shaft.

(b) Install the lock plate and bolt, and then stake the lock plate.

Torque: 40 kg-cm (35 in.-lb, 3.9 N·m)

(c) Install the snap ring and lock ball.

(d) Slide the speedometer gear on to the shaft.

(e) Using snap ring pliers, install the outer snap ring.

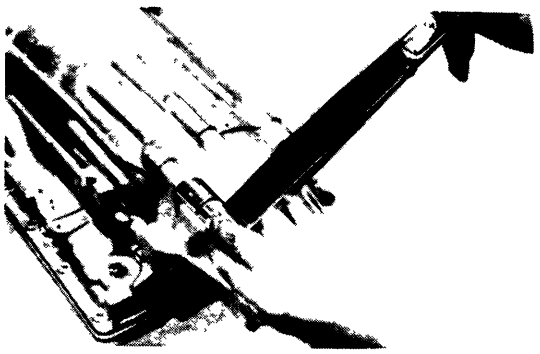

48. INSTALL EXTENSION HOUSING WITH NEW GASKET

Do not use gasket sealer. Install the housing with four long and two short bolts. Tighten the bolts.

Torque: 345 kg-cm (25 ft-lb, 34 N·m)

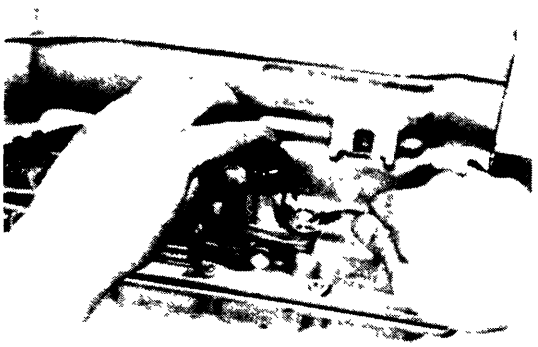

49. INSTALL SPEEDOMETER DRIVEN GEAR

50. INSTALL NEUTRAL START SWITCH AND SHIFT HANDLE (See page AT-4)

51. INSTALL SOLENOID

INSTALLATION OF TRANSMISSION

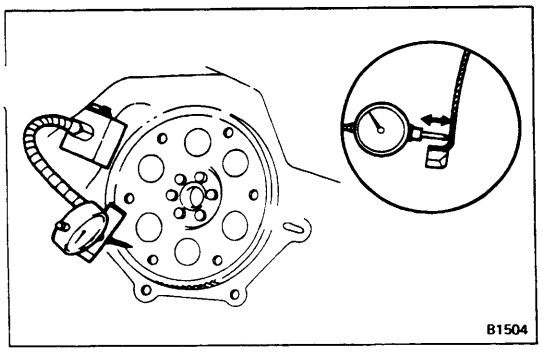

1. MEASURE DRIVE PLATE RUNOUT AND INSPECT RING GEAR

Set up a dial indicator and measure drive plate runout. If runout exceeds 0.20 mm (0 0079 in.) or if the ring gear is damaged, replace drive plate. If installing new drive plate, note the orientation of spacers and tighten the bolts.

Torque: 850 kg-cm (61 ft-lb, 83 N·m)

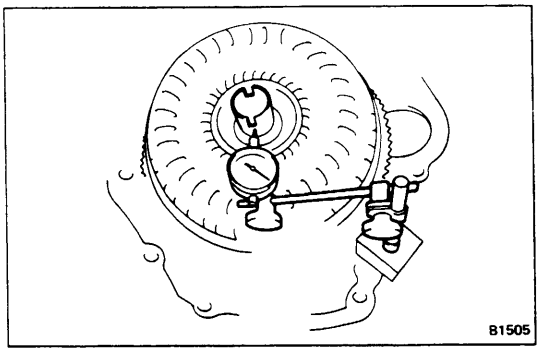

2. MEASURE TORQUE CONVERTER SLEEVE RUNOUT

(a) Temporarily mount the torque converter to the drive plate. Set up a dial indicator.

If runout exceeds 0.30 mm (0.0118 in.), try to correct by reorienting the installation of the converter. If excessive runout cannot be corrected, replace the torque converter.

NOTE: Mark the position of the converter to ensure correct installation.

(b) Remove the torque converter.

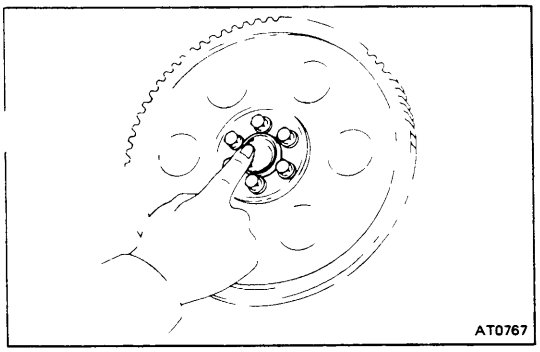

3. APPLY GREASE TO CENTER HUB OF TORQUE CONVERTER AND PILOT HOLE IN CRANKSHAFT

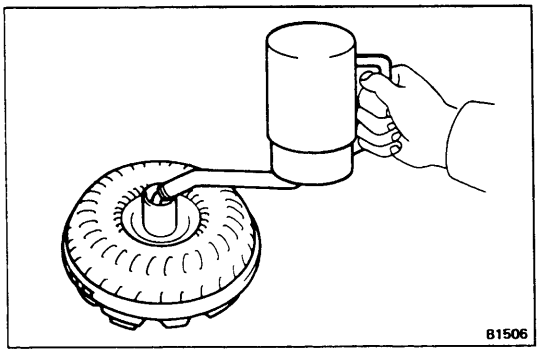

4. INSTALL TORQUE CONVERTER IN TRANSMISSION

If the torque converter has been drained and washed, refill with fresh ATF.

Fluid grade: ATF DEXRON II

ATF capacity: 2.0 liters (2.1 US qts, 1.8 Imp.qts)

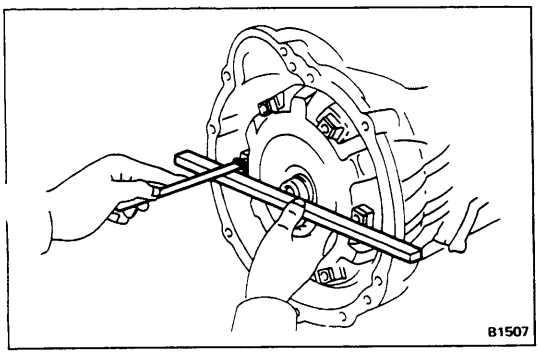

5. CHECK TORQUE CONVERTER INSTALLATION

Using calipers and a straight edge, measure from the center hub to the front surface of the converter housing.

Correct distance: 20 mm (0.79 in.)

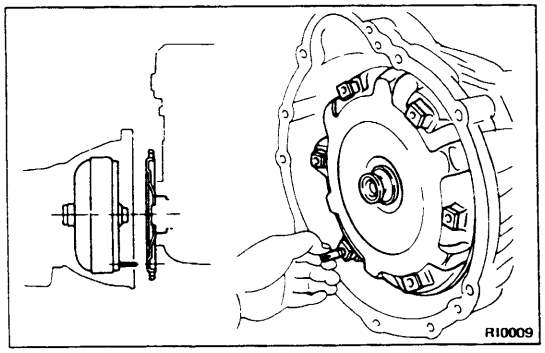

6. **INSTALL GUIDE PIN IN TORQUE CONVERTER**

7. **ALIGN TRANSMISSION AT INSTALLATION POSITIO'**

CAUTION: Be careful not to tilt the transmission forward because the torque converter could slide out.

(a) Align the guide pin with a drive plate hole.

(b) Align the two sleeves on the block with the converter housing.

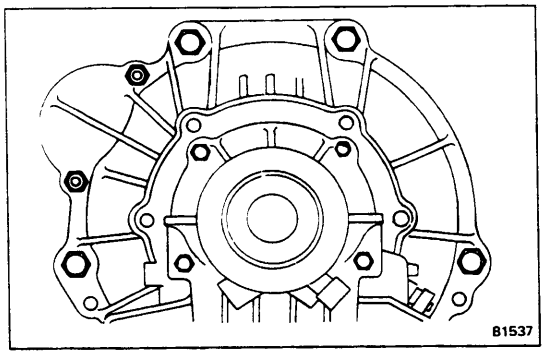

8. **INSTALL CONVERTER HOUSING MOUNTING BOLTS**

Install the filler tube bracket with the upper right-hand bolt and tighten both bolts.

Torque: 650 kg-cm (47 ft-lb, 64 N·m)

9. **INSTALL STARTER**

10. **INSTALL BOTH SIDE STIFFENER PLATES**

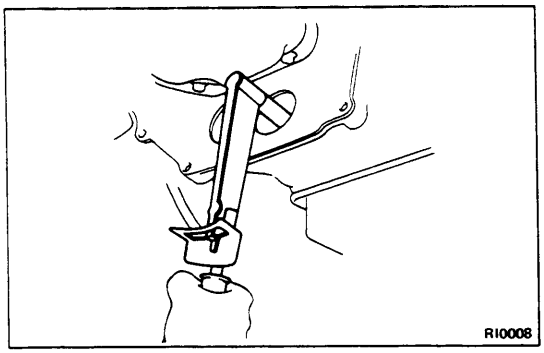

11. **INSTALL SIX TORQUE CONVERTER BOLTS**

(a) Remove the guide pin.

(b) Install the six bolts finger tight. Turn the crankshaft to gain access.

(c) Tighten the bolts evenly.

Torque: 185 kg-cm (13 ft-lb, 18 N·m)

12. **INSTALL SERVICE HOLE COVERS AT REAR OF ENGINE**

13. **JACK UP TRANSMISSION SLIGHTLY AND REMOVE WOODEN PIECE BETWEEN ENGINE OIL PAN AND MEMBER**

14. **INSTALL ENGINE REAR MOUNTING WITH BRACKET**

(a) Install the engine rear mounting with bracket to the member.

Torque: 130 kg-cm (9 ft-lb, 13 N·m)

(b) Lower the transmission and connect the mounting to the extension housing.

Torque: 260 kg-cm (19 ft-lb, 25 N·m)

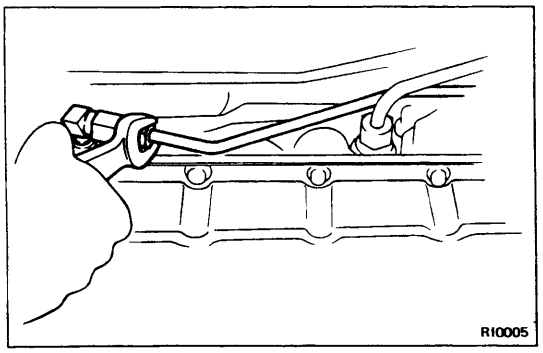

15. **INSTALL OIL FILLER TUBE AND CONNECT EXHAUST PIPE CLAMP**

16. **INSTALL ENGINE UNDER COVER**

17. **CONNECT OIL COOLER LINES**

Torque: 350 kg-cm (25 ft-lb, 34 N·m)

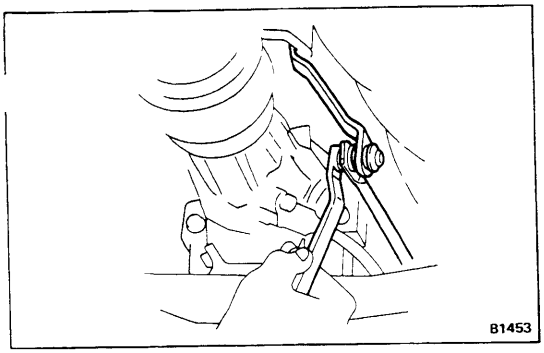

18. CONNECT MANUAL SHIFT LINKAGE
19. CONNECT SPEEDOMETER CABLE
20. INSTALL PROPELLER SHAFT (See page PR-11)

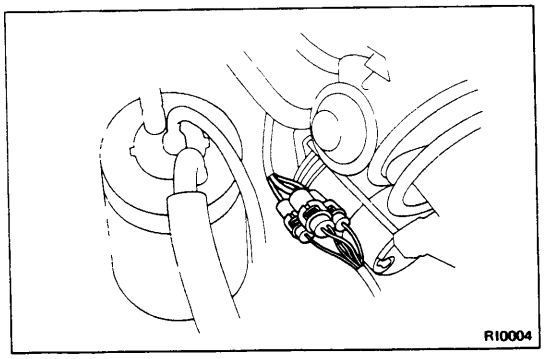

21. CONNECT WIRING CONNECTORS TO SOLENOID, NEUTRAL START AND BACK-UP LIGHT SWITCHES
    Connect the connectors located near the starter.

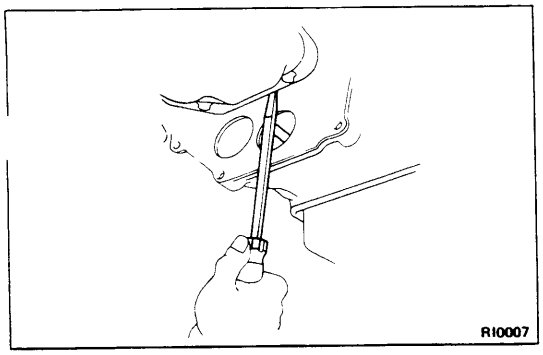

22. CONNECT TRANSMISSION THROTTLE CABLE (See page AT-21)
23. ADJUST THROTTLE CABLE (See page AT-4)
24. INSTALL AIR CLEANER ASSEMBLY
25. CONNECT BATTERY CABLE TO NEGATIVE TERMINAL

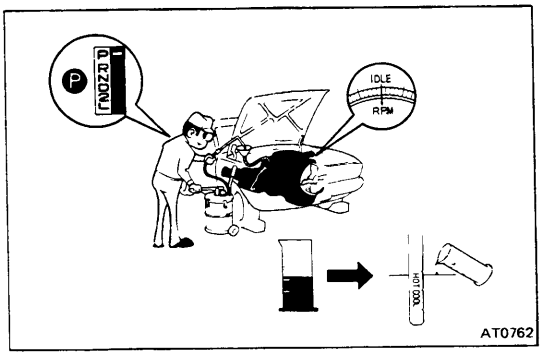

26. FILL TRANSMISSION WITH ATF
    Add about 4.0 liters (4.2 US qts, 3.5 Imp.qts) of ATF.
    Fluid grade: ATF DEXRON II
    Total Capacity: 6.5 liters (6.9 US qts, 5.7 Imp.qts)

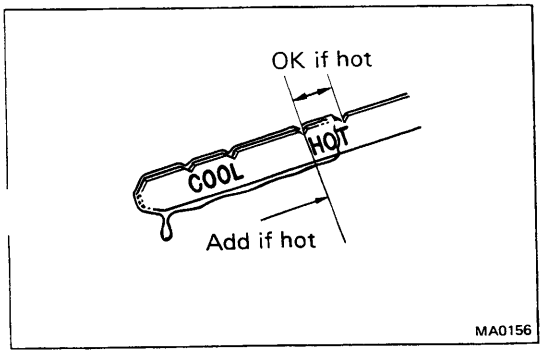

27. CHECK ATF LEVEL (See page MA-19)
28. PERFORM ROAD TEST (See page AT-9)

TRANSFER

	Page
TROUBLESHOOTING	TF-2
TRANSFER	TF-3
Removal of Transfer	TF-3
Components	TF-5
Disassembly of Transfer	TF-7
Inspection of Transfer Components	TF-12
Assembly of Transfer	TF-20
Installation of Transfer	TF-25

TROUBLESHOOTING

Problem	Possible cause	Remedy	Page
Hard to shift or will not shift	Splines on input shaft dirty or burred Transfer faulty	Repair as necessary Disassemble and inspect transfer	TF-3 TF-3
Transfer jumps out of gear	Transfer faulty	Disassemble and inspect transfer	TF-3

A00837

TRANSFER

REMOVAL OF TRANSFER

1. DISCONNECT BATTERY CABLE FROM NEGATIVE TERMINAL

2. REMOVE STARTER UPPER MOUNTING NUT

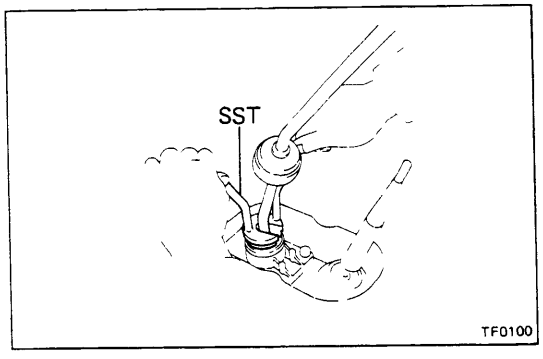

3. REMOVE TRANSMISSION SHIFT LEVER FROM INSIDE OF VEHICLE

(22R Engine Vehicle)

Using SST, pull up the shift lever cup and pull out the shift lever from the transmission.

SST 09305-20012

(22R-EC Engine Vehicle)

(a) Pull up the shift lever cup.

(b) Remove the four bolts and pull out the shift lever from the transmission.

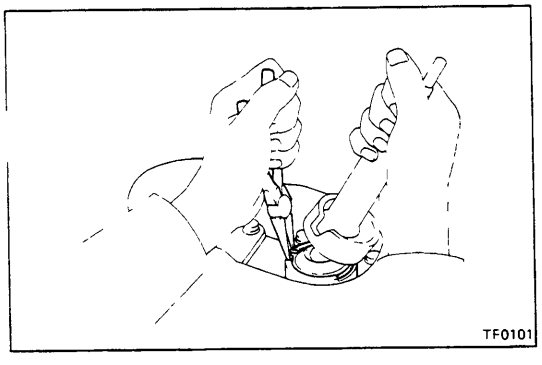

4. REMOVE TRANSFER SHIFT LEVER FROM INSIDE OF VEHICLE

Using pliers, remove the snap ring and pull out the shift lever from the transfer.

5. RAISE VEHICLE AND DRAIN TRANSMISSION AND TRANSFER

CAUTION: Be sure the vehicle is securely supported.

6. DISCONNECT FRONT AND REAR PROPELLER SHAFTS (See page PR-3)

7. DISCONNECT SPEEDOMETER CABLE, BACK-UP LIGHT SWITCH CONNECTOR AND TRANSFER INDICATOR SWITCH CONNECTOR

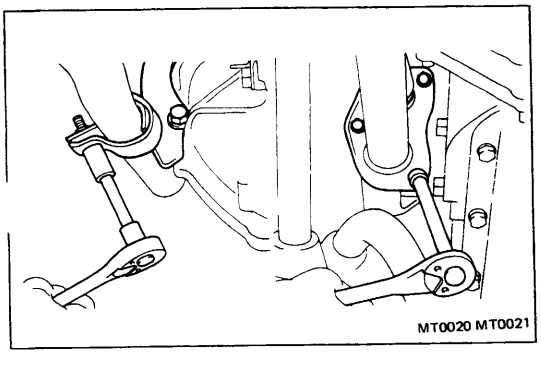

8. REMOVE EXHAUST PIPE CLAMP AND EXHAUST PIPE

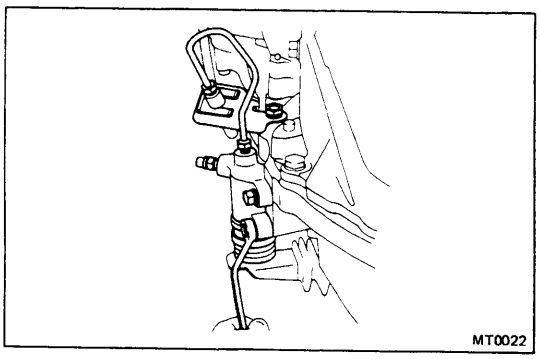

9. REMOVE CLUTCH RELEASE CYLINDER, TUBE BRACKET AND STARTER LOWER MOUNTING BOLT

Remove the mounting bolts and lay the starter and relea cylinder alongside the engine.

NOTE: Do not disconnect the clutch line.

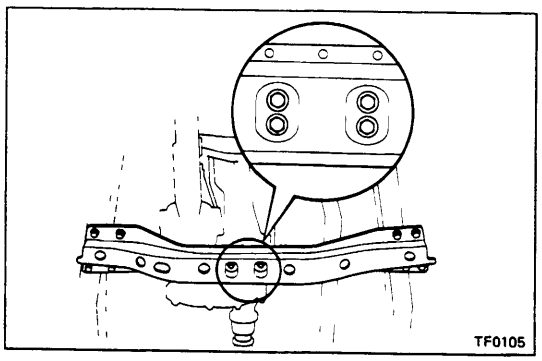

10. REMOVE FRAME CROSSMEMBER NO.2 FROM SIDE FRAME

(a) Remove the four bolts from the engine rear mounting.

(b) Raise the transmission slightly with a jack.

(c) Remove the four bolts from the side frame and remove the frame crossmember No.2.

11. PLACE PIECE OF WOOD BETWEEN ENGINE OIL PAN AND FRONT AXLE

12. LOWER TRANSMISSION WITH TRANSFER

13. REMOVE EXHAUST PIPE BRACKET AND STIFFENER PLATE BOLTS

14. REMOVE REMAINING TRANSMISSION BOLTS

15. REMOVE TRANSMISSION WITH TRANSFER

(a) Draw out the transmission with the transfer toward the rear.

(b) Lower the transmission with the transfer front and remove it from the vehicle.

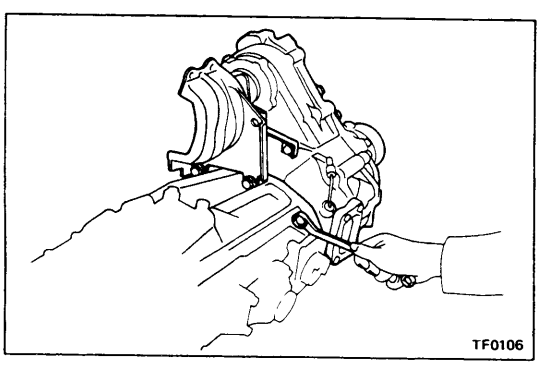

16. REMOVE ENGINE REAR MOUNTING

17. REMOVE PROPELLER SHAFT UPPER DUST COVER AND TRANSFER FROM TRANSMISSION

(a) Remove the dust cover bolt from the bracket.

(b) Remove the transfer adapter rear mounting bolts

(c) Pull the transfer straight up and remove it from the transmission.

NOTE: Take care not to damage the adapter rear oil seal with the transfer input gear spline.

COMPONENTS

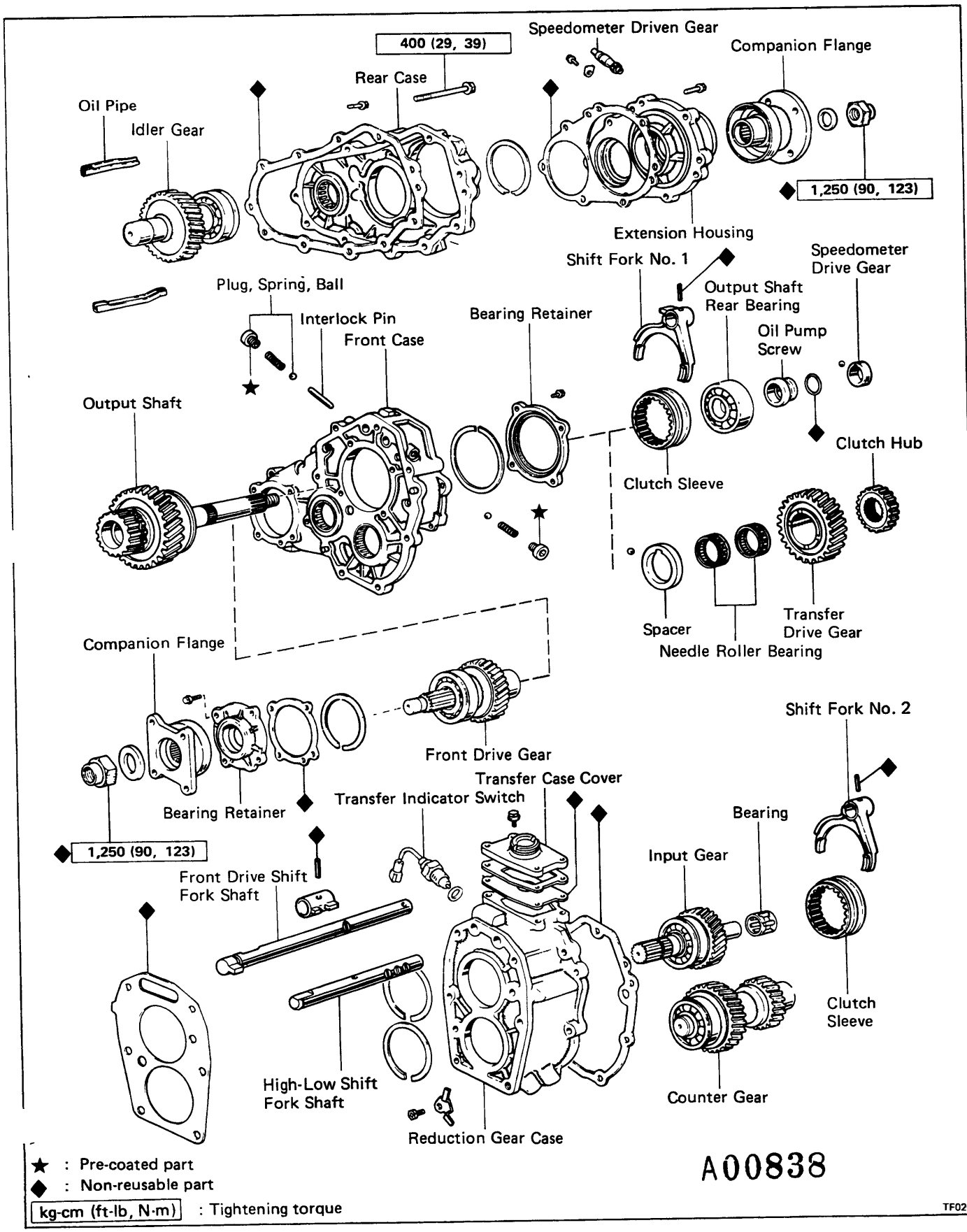
400 (29, 39)
Speedometer Driven Gear
Companion Flange
Rear Case
Oil Pipe
Idler Gear
1,250 (90, 123)
Extension Housing
Shift Fork No. 1
Speedometer Drive Gear
Output Shaft Rear Bearing
Plug, Spring, Ball
Interlock Pin
Front Case
Bearing Retainer
Oil Pump Screw
Output Shaft
Clutch Hub
Clutch Sleeve
Spacer
Needle Roller Bearing
Transfer Drive Gear
Companion Flange
Front Drive Gear
Shift Fork No. 2
Transfer Case Cover
Transfer Indicator Switch
Bearing Retainer
Bearing
1,250 (90, 123)
Input Gear
Front Drive Shift Fork Shaft
Clutch Sleeve
High-Low Shift Fork Shaft
Counter Gear
Reduction Gear Case
★ : Pre-coated part
◆ : Non-reusable part
kg-cm (ft-lb, N·m) : Tightening torque
A00838
TF0206

COMPONENTS (Cont'd)

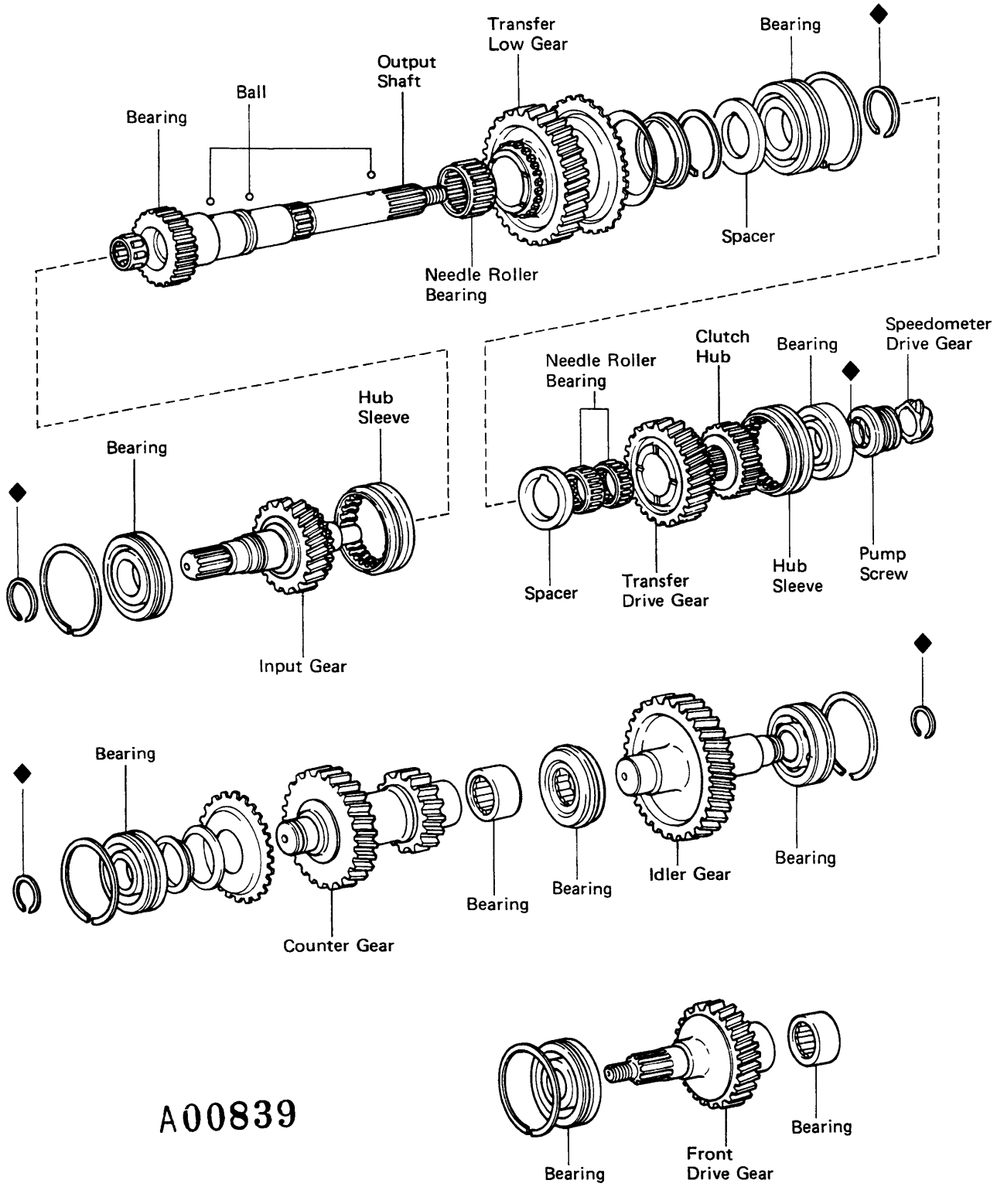

◆ : Non-reusable part

TF0207

DISASSEMBLY OF TRANSFER

1. **REMOVE SPEEDOMETER DRIVEN GEAR**

2. **REMOVE TRANSFER INDICATOR SWITCH**

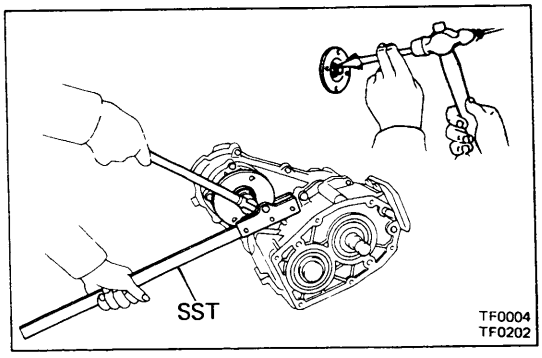

3. **REMOVE FRONT COMPANION FLANGE**
   (a) Using a hammer and chisel, loosen the staked part of the nut.
   (b) Using SST to hold the flange, remove the nut and washer.

   SST 09330-00020

   (c) Remove the companion flange.

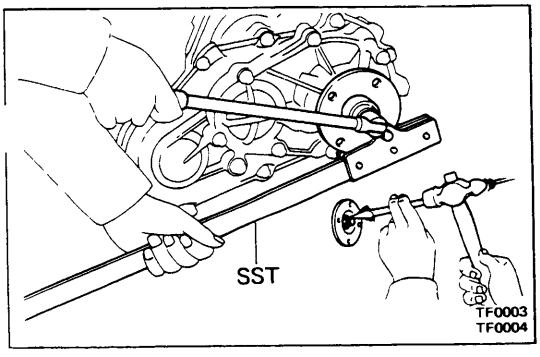

NOTE: If the companion flange is difficult to remove, use SST.

4. **REMOVE REAR COMPANION FLANGE**
   (a) Using a hammer and chisel, loosen the staked part of the nut.
   (b) Using SST to hold the flange, remove the nut and washer.

   SST 09330-00020

   (c) Remove the companion flange.

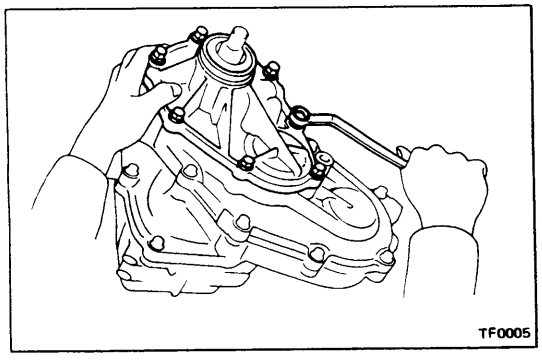

5. **REMOVE EXTENSION HOUSING**

   Remove the seven bolts and remove the extension housing.

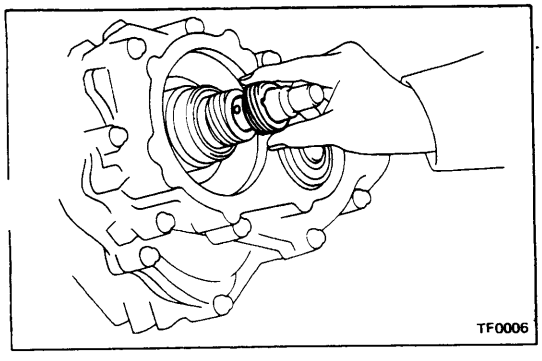

6. **REMOVE SPEEDOMETER DRIVE GEAR, STEEL BALL, OIL PUMP SCREW AND BEARING**

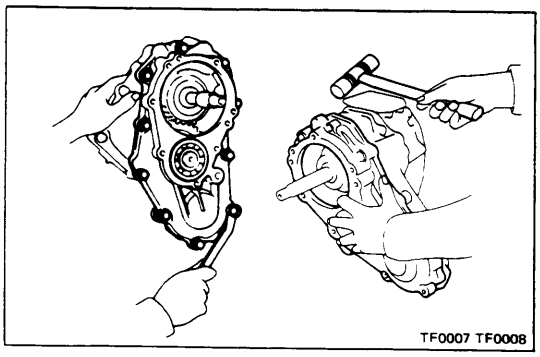
TF0007 TF0008

7. REMOVE REAR CASE

(a) Remove the ten bolts.

(b) Using a plastic hammer, remove the rear case with the idler gear.

NOTE: Hold the front case so the rear does not descend. If it descends, the clutch hub and steel ball may fall out.

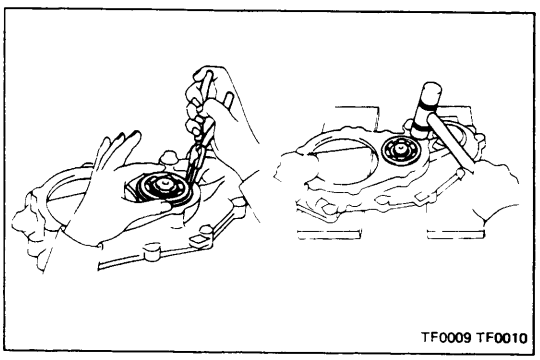
TF0009 TF0010

8. REMOVE IDLER GEAR FROM REAR CASE

(a) Using snap ring pliers, remove the snap ring.

(b) Using a plastic hammer, tap out the idler gear from the rear case.

NOTE: Place the rear case on something soft such as wooden blocks.

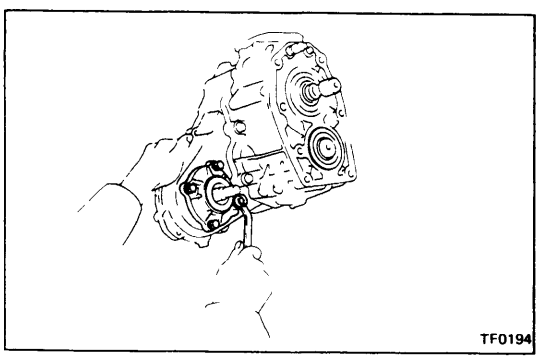
TF0194

9. REMOVE BEARING RETAINER

Remove the four bolts and remove the bearing retainer.

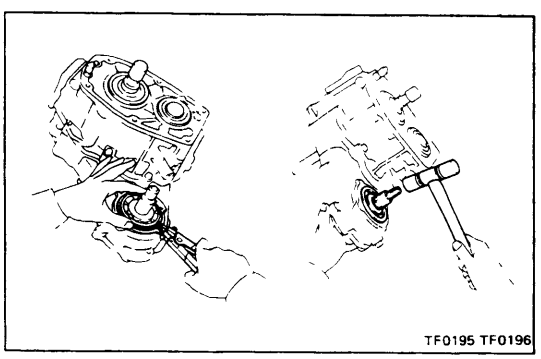
TF0195 TF0196

10. REMOVE FRONT DRIVE GEAR

(a) Using snap ring pliers, remove the snap ring.

(b) Using a plastic hammer, tap out the front drive gear from the front case.

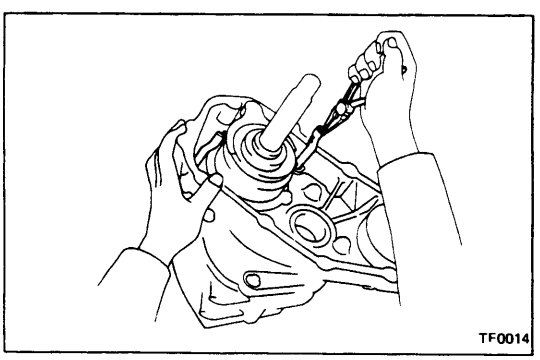
TF0014

11. REMOVE OIL PIPES

Using pliers, remove the two oil pipes.

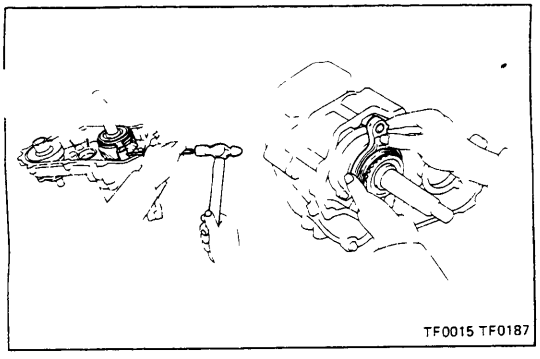

12. REMOVE SHIFT NO.1 FORK AND CLUTCH SLEEVE

(a) Shift the fork shafts to the high-low position.

(b) Using a pin punch and hammer, drive out the slotted spring pin.

(c) Remove the shift No.1 fork together with the clutch sleeve.

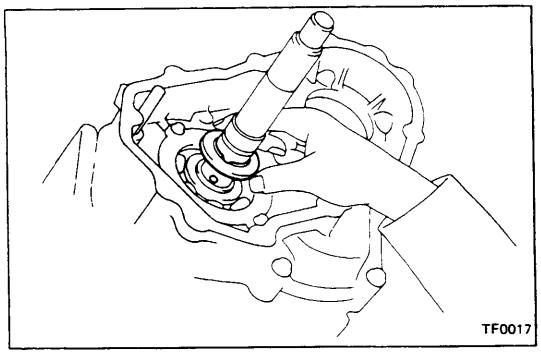

13. REMOVE CLUTCH HUB AND TRANSFER DRIVE GEAR

14. REMOVE NEEDLE ROLLER BEARING, NO.2 SPACER AND STEEL BALL

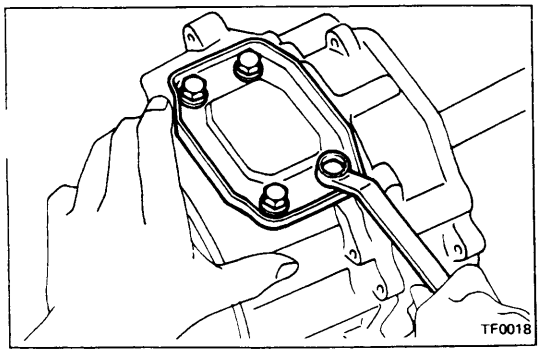

15.-1 (22R Engine Vehicle)
REMOVE TRANSFER CASE COVER

Remove the four bolts and remove the transfer case cover and gasket.

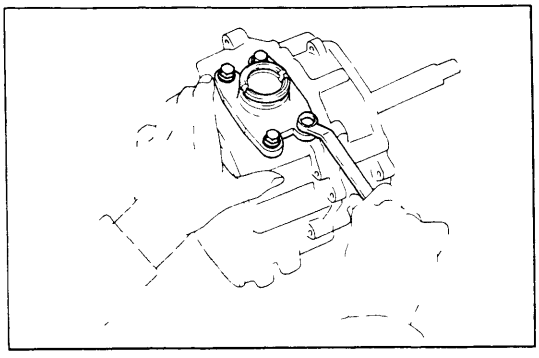

15.-2 (22R-EC Engine Vehicle)
REMOVE SHIFT LEVER RETAINER

Remove the four bolts and remove the shift lever retainer and gasket.

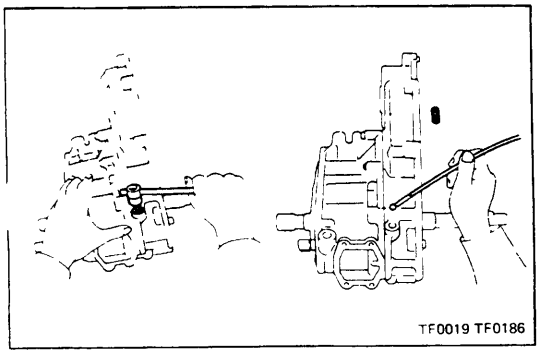

16. REMOVE STRAIGHT SCREW PLUGS, SPRINGS AND LOCKING BALLS

(a) Using SST, remove the plug on the right side.

SST 09313-30021

(b) Using a magnetic finger, remove the spring and ball.

(c) Remove the plug, spring and ball on the left side in the same procedure.

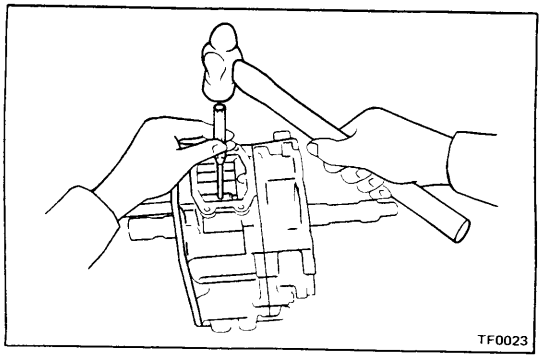
TF0023

17. REMOVE SLOTTED SPRING PINS

Using a pin punch and hammer, drive out the slotted spring pins from shift fork shaft.

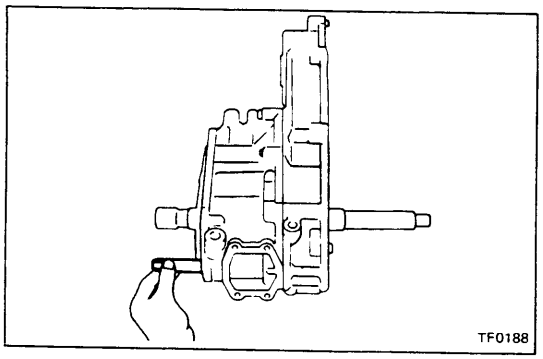
TF0188

18. REMOVE FRONT DRIVE SHIFT FORK SHAFT

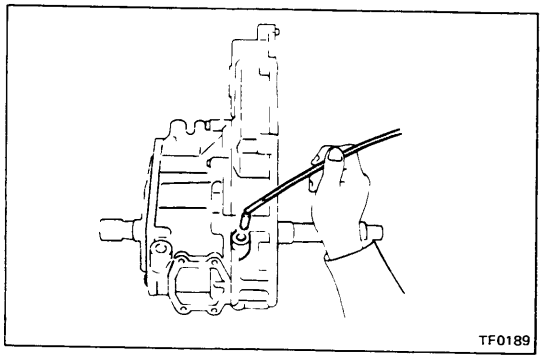
TF0189

19. REMOVE INTERLOCK PIN

Using a magnetic finger, remove the interlock pin.

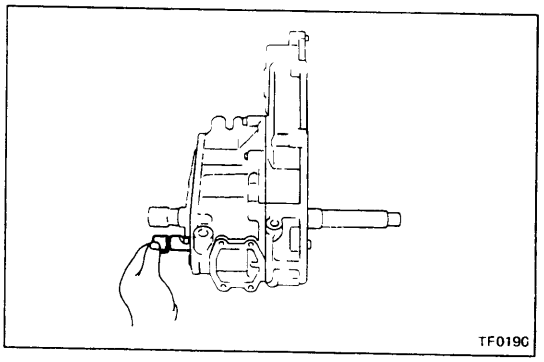
TF0190

20. REMOVE HIGH-LOW SHIFT FORK SHAFT

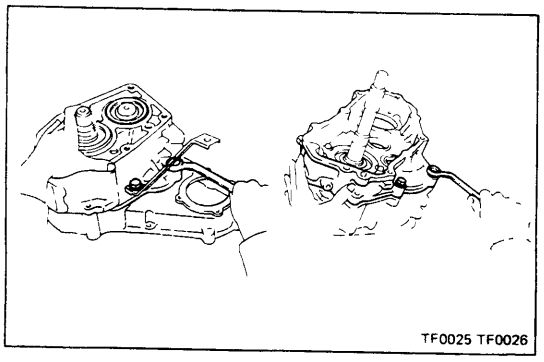
TF0025 TF0026

21. REMOVE FRONT CASE

(a) Remove the four bolts.

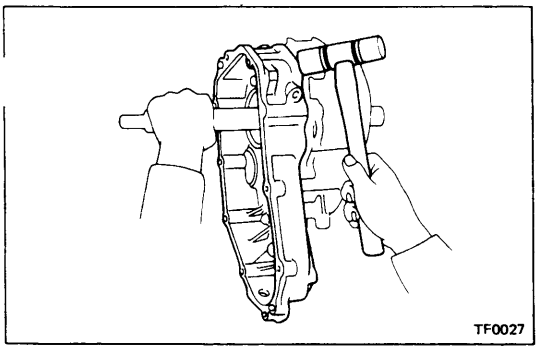
TF0027

(b) Using a plastic hammer, remove the front case with the output shaft.

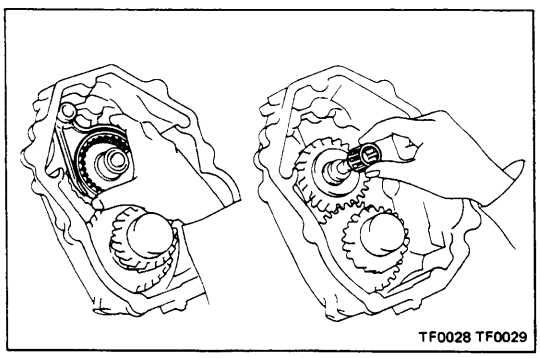
TF0028 TF0029

22. REMOVE NO.2 FORK WITH CLUTCH SLEEVE AND NEEDLE ROLLER BEARING FROM INPUT SHAFT

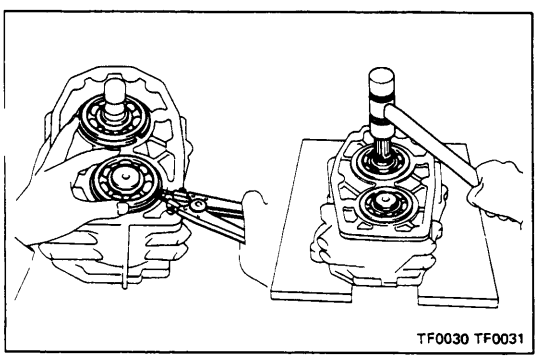
TF0030 TF0031

23. REMOVE INPUT GEAR AND COUNTER GEAR FROM REDUCTION GEAR CASE

(a) Using snap ring pliers, remove the two snap rings.

(b) Using a plastic hammer, tap out the input gear and counter gear from the reduction gear case.

NOTE: Place the reduction gear case on something soft such as wooden blocks.

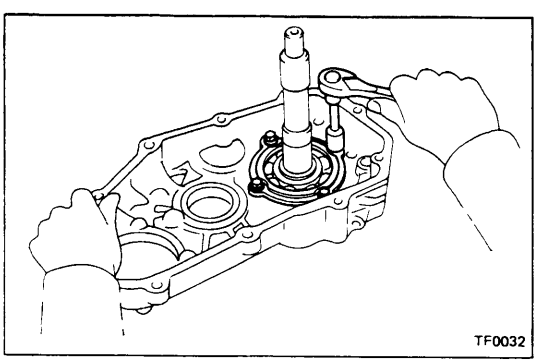
TF0032

24. REMOVE OUTPUT SHAFT FROM FRONT CASE

(a) Remove the four bearing retainer bolts and remove the bearing retainer.

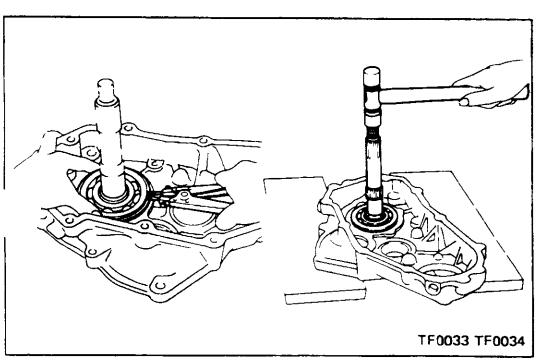
TF0033 TF0034

(b) Using snap ring pliers, remove the snap ring.

(c) Using a plastic hammer, tap out the output shaft from the front case.

NOTE: Place the front case on something soft such as wooden blocks.

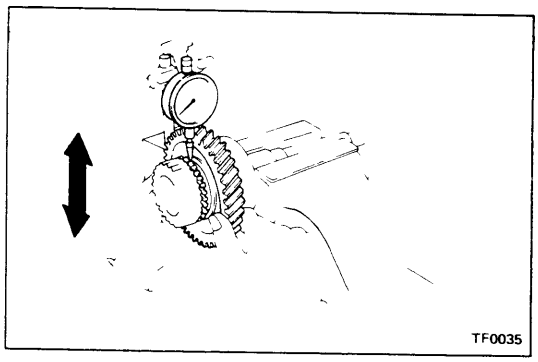

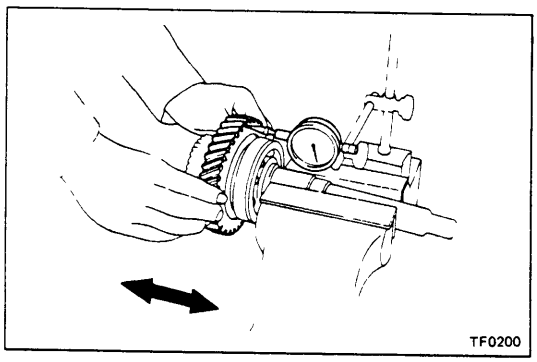

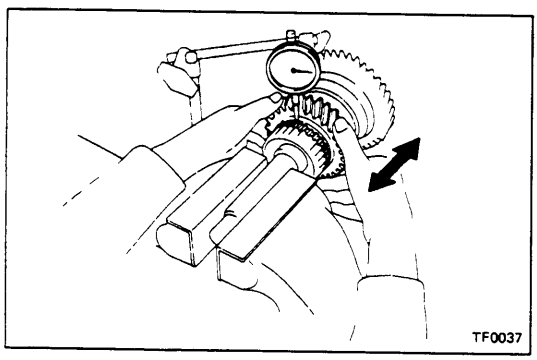

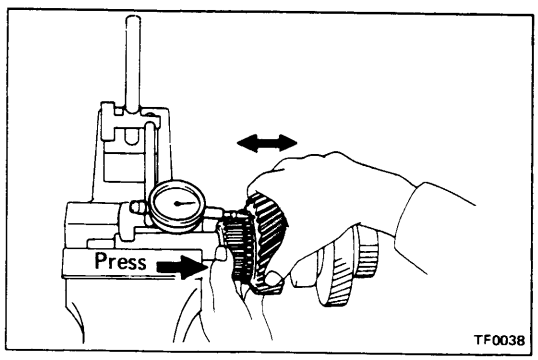

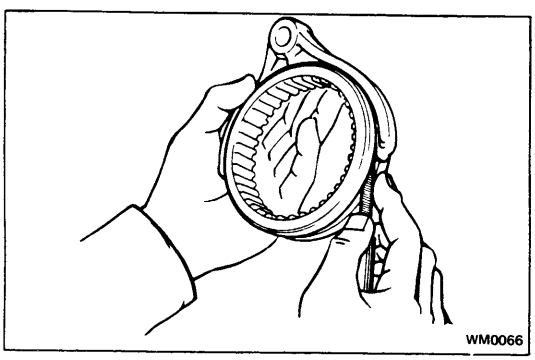

INSPECTION OF TRANSFER COMPONENTS

1. CHECK OIL CLEARANCE AND THRUST CLEARANCE TRANSFER LOW GEAR

(a) Using a dial indicator, measure the oil clearance between the gear and shaft with the needle roller bearing installed.

Standard clearance: 0.010 — 0.055 mm (0.0004 — 0.0022 in.)
Maximum clearance: 0.075 mm (0.0030 in.)

(b) Using a dial indicator, measure the thrust clearance with the spacer and bearing installed.

NOTE: Do not touch the shaft end of the dial indicator to the sub gear.

Standard clearance: 0.10 — 0.25 mm (0.0039 — 0.0098 in.)
Maximum clearance: 0.30 mm (0.0118 in.)

2. CHECK OIL CLEARANCE AND THRUST CLEARANCE OF TRANSFER DRIVE GEAR

(a) Using a dial indicator, measure the oil clearance between the gear and shaft with the needle roller be ing installed.

Standard clearance: 0.009 — 0.051 mm (0.0004 — 0.0020 in.)
Maximum clearance: 0.071 mm (0.0028 in.)

(b) Using a dial indicator, measure the thrust clearance with the clutch hub and spacer installed.

Standard clearance: 0.09 — 0.27 mm (0.0035 — 0.0106 in.)
Maximum clearance: 0.32 mm (0.0126 in.)

3. MEASURE CLEARANCE OF SHIFT FORKS AND HUB SLEEVES

Using a feeler gauge, measure the clearance between the hub sleeve and shift fork.

Maximum clearance: 1.0 mm (0.039 in.)

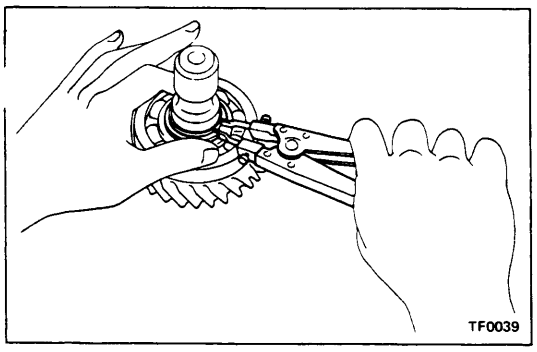

4. INSPECT INPUT GEAR AND BEARING

Check for wear or damage.

5. IF NECESSARY, REPLACE INPUT GEAR BEARING

(a) Using snap ring pliers, remove the snap ring.

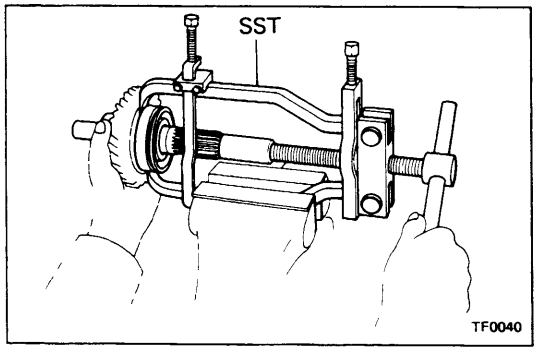

(b) Using SST, remove the bearing.

SST 09950-20015

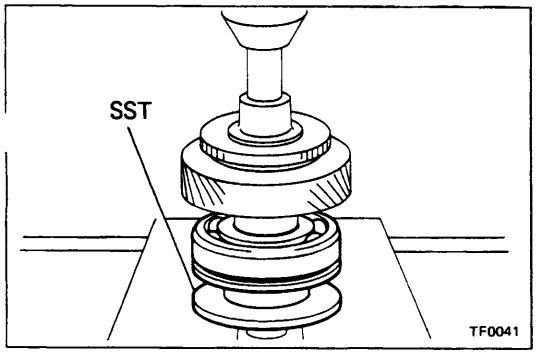

(c) Using SST, press in a new bearing.

SST 09316-60010

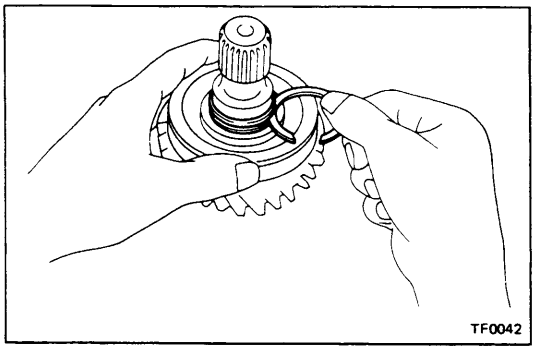

(d) Select a snap ring that will allow minimum axial play and install it on the shaft.

Maximum play: 0.15 mm (0.0059 in.)

Mark	Thickness	mm (in.)
1	2.05 — 2.10	(0.0807 — 0.0827)
3	2.15 — 2.20	(0.0846 — 0.0866)
5	2.25 — 2.30	(0.0886 — 0.0906)

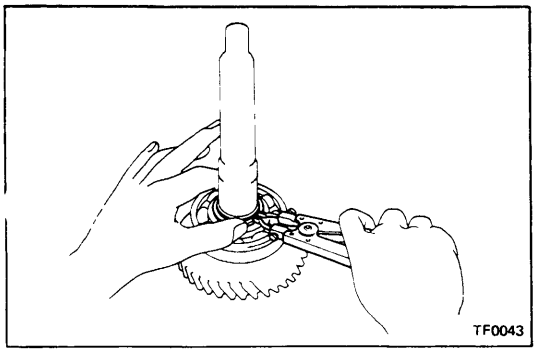

6. INSPECT OUTPUT SHAFT AND BEARING

Check for wear and damage.

7. IF NECESSARY, REPLACE OUTPUT SHAFT FRONT BEARING, LOW GEAR AND SUB GEAR

(a) Using snap ring pliers, remove the snap ring.

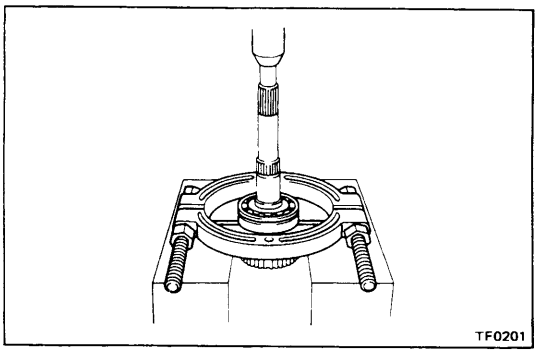

(b) Using a press, remove the bearing, No.1 spacer and low gear.

(c) Remove the steel ball and needle roller bearing.

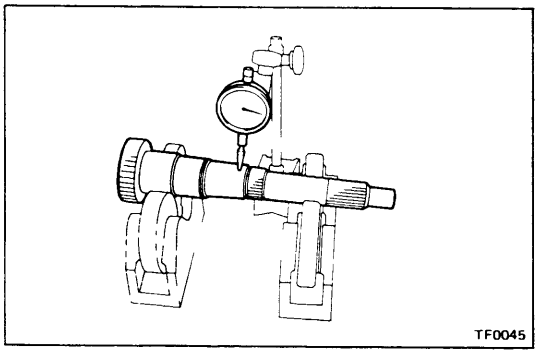

(d) Using a dial indicator, measure the shaft runout.

Maximum runout: 0.03 mm (0.0012 in.)

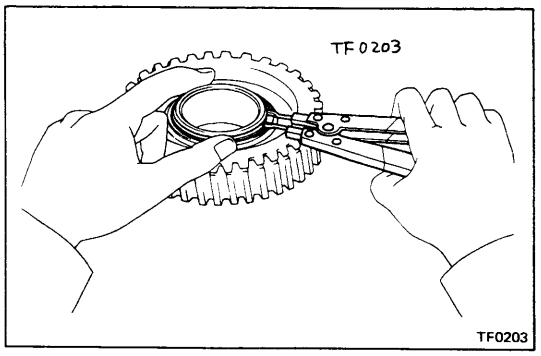

(e) Using snap ring pliers, remove the snap ring from the low gear.

(f) Remove the spacer, thrust spring and sub gear.

(g) Install the sub gear, thrust spring and spacer.

(h) Using snap ring pliers, install the snap ring.

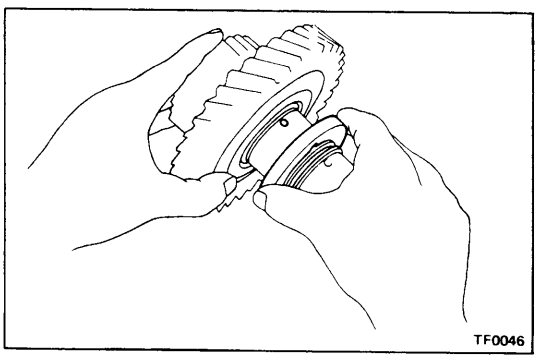

(i) Apply MP grease to the needle roller bearing.

(j) Install the low gear with needle roller bearing to the output shaft.

(k) Intall the steel ball on the output shaft.

(l) Install the No.1 spacer.

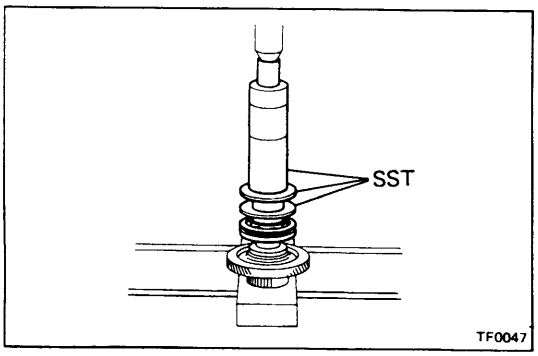

(m) Using a press and SST, install the new bearing.

SST 09316-60010

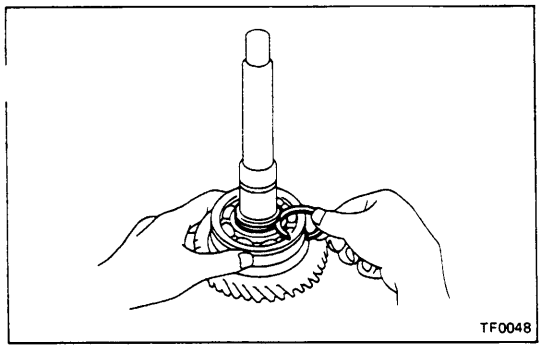
TF0048

(n) Select a snap ring that will allow minimum axial play and install it on the shaft.

Maximum play: 0.10 mm (0.0039 in.)

Mark	Thickness	mm (in.)
0	2.40 – 2.45	(0.0945 – 0.0965)
1	2.45 – 2.50	(0.0965 – 0.0984)
2	2.50 – 2.55	(0.0984 – 0.1004)
3	2.55 – 2.60	(0.1004 – 0.1024)
4	2.60 – 2.65	(0.1024 – 0.1043)
5	2.65 – 2.70	(0.1043 – 0.1063)

8. INSPECT COUNTER GEAR AND BEARING

Check for wear or damage.

9. IF NECESSARY, REPLACE COUNTER GEAR FRONT BEARING AND SUB GEAR

(a) Using snap ring pliers, remove the snap ring.

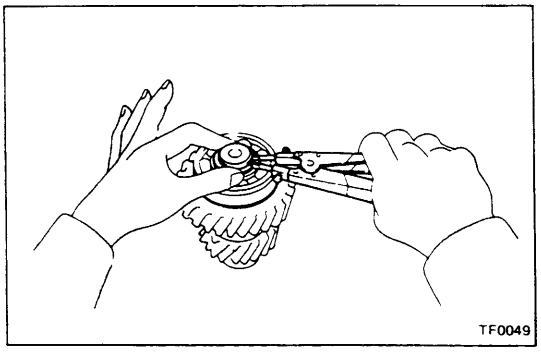
TF0049

(b) Using SST and a press, remove the bearing.

SST 09950-00020

(c) Remove the spacer, thrust spring and sub gear.

(d) Install the sub gear, thrust spring and spacer on the counter gear.

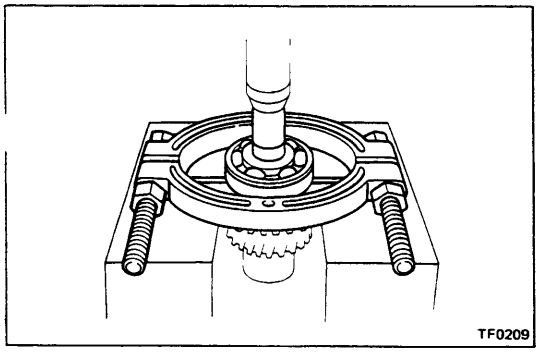
TF0209

(e) Using a press and 32 mm socket wrench, install the bearing.

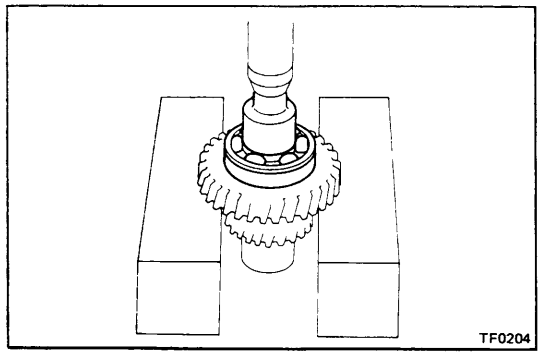
TF0204

(f) Select a snap ring that will allow minimum axial play and install it on the shaft.

Maximum play: 0.15 mm (0.0059 in.)

Mark	Thickness	mm (in.)
1	2.10 – 2.15	(0.0827 – 0.0846)
3	2.20 – 2.25	(0.0866 – 0.0886)

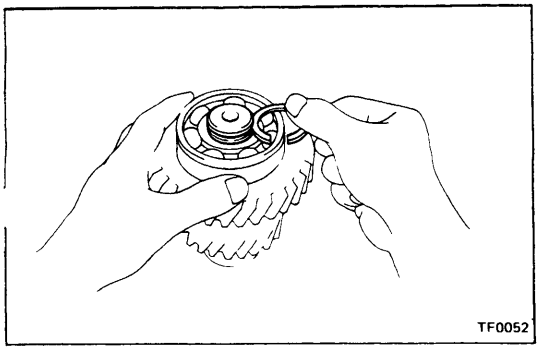
TF0052

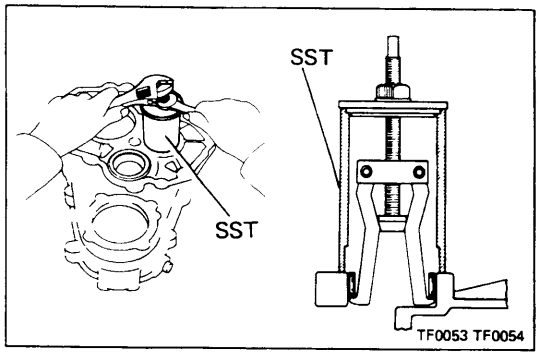

10. IF NECESSARY, REPLACE COUNTER GEAR REAR BEARING

(a) Using SST, remove the bearing.

SST 09612-30012

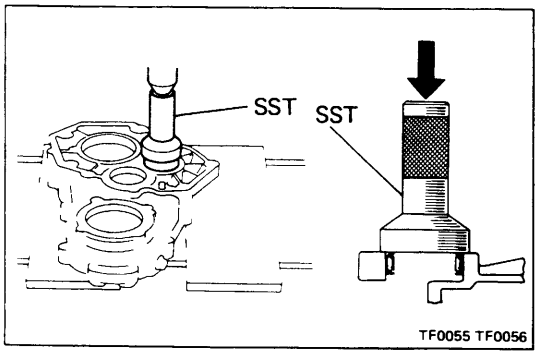

(b) Using SST, press in a new bearing.

SST 09310-35010

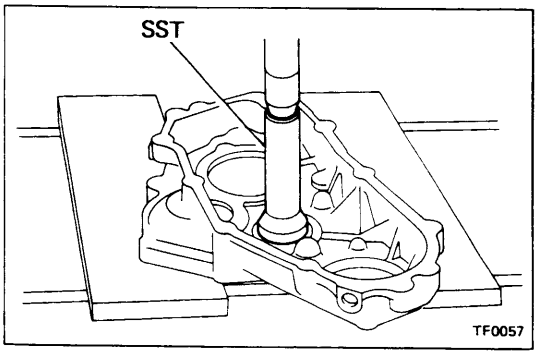

11. INSPECT IDLER GEAR AND BEARING

Check for wear or damage.

12. IF NECESSARY, REPLACE IDLER GEAR FRONT BEARI

(a) Using SST, press out the bearing.

SST 09310-35010

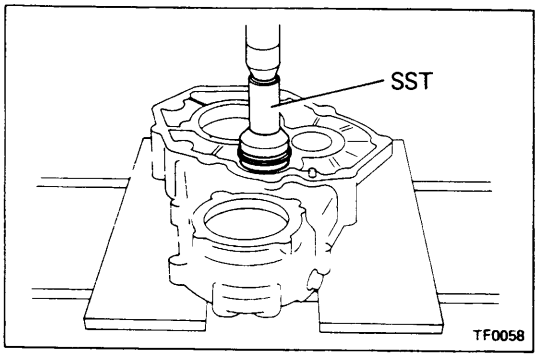

(b) Using SST, press in a new bearing up to the position of the snap ring.

SST 09310-35010

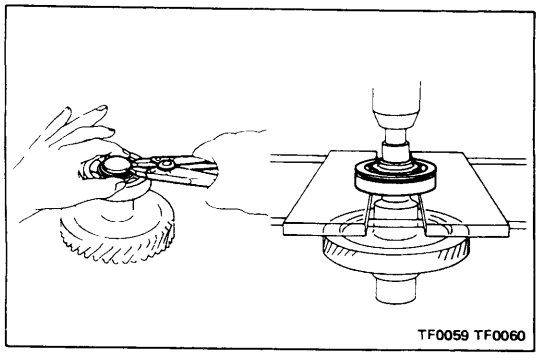

13. IF NECESSARY, REPLACE IDLER GEAR REAR BEARING

(a) Using snap ring pliers, remove the snap ring.

(b) Press out the bearing.

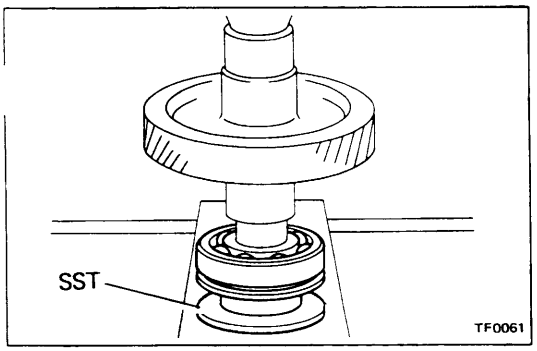

(c) Using SST, press in a new bearing.
SST 09316-60010

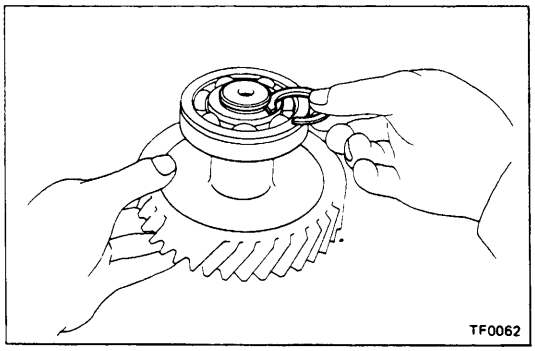

(d) Select a snap ring that will allow minimum axial play and install it on the shaft.

Maximum play: 0.15 mm (0.0059 in.)

Mark	Thickness mm (in.)
A	1.50 — 1.55 (0.0591 — 0.0610)
B	1.60 — 1.65 (0.0630 — 0.0650)

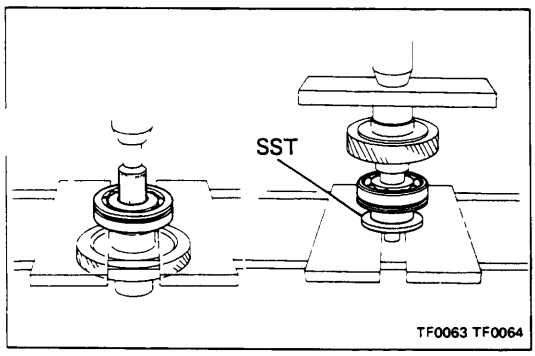

14. INSPECT FRONT DRIVE GEAR AND BEARING

Check for wear or damage.

15. IF NECESSARY, REPLACE FRONT DRIVE GEAR FRONT BEARING

(a) Press out the bearing.

(b) Using SST, press in a new bearing.
SST 09316-60010

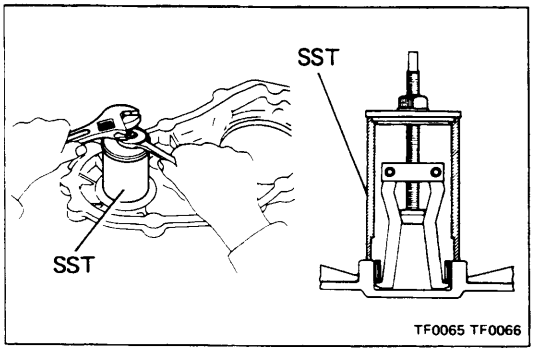

16. IF NECESSARY, REPLACE FRONT DRIVE GEAR REAR BEARING

(a) Using SST, remove the bearing.
SST 09612-30012

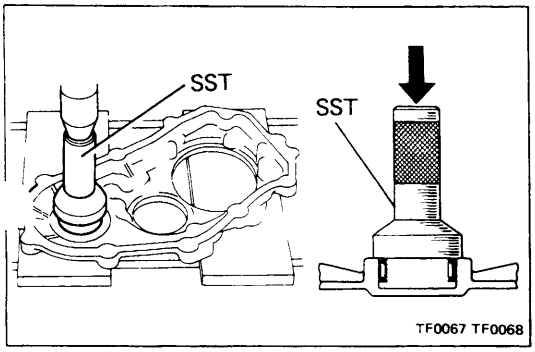

(b) Using SST, press in a new bearing.
SST 09310-35010

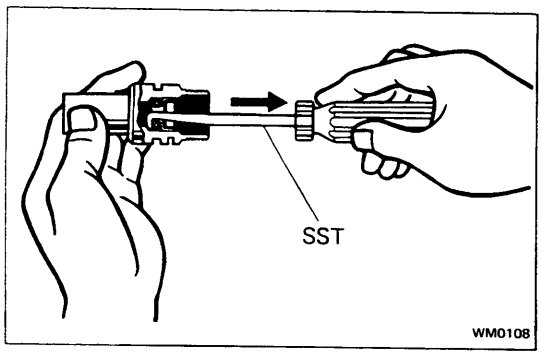

17. INSPECT SPEEDOMETER DRIVEN GEAR OIL SEAL

(a) Check for damage.

(b) Check the oil seal lip for wear or damage.

18. IF NECESSARY, REPLACE SPEEDOMETER DRIVEN GEAR OIL SEAL

(a) Using SST, pull out the oil seal.

SST 09921-00010

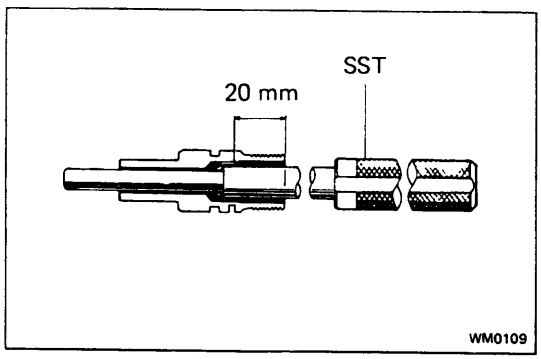

(b) Using SST, drive a new oil seal into the sleeve.

SST 09201-60011

Oil seal depth: 20 mm (0.79 in.)

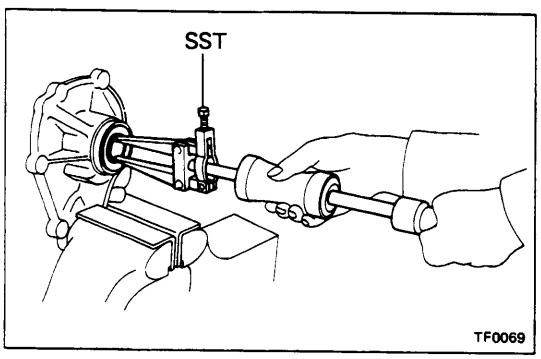

19. INSPECT EXTENSION HOUSING OIL SEAL

(a) Check for damage.

(b) Check the oil seal lip for wear or damage.

20. IF NECESSARY, REPLACE EXTENSION HOUSING OIL SEAL

(a) Using SST, remove the two oil seals.

SST 09308-00010

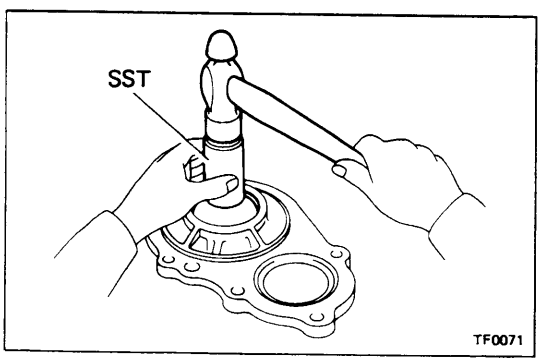

(b) Using SST, drive in a new oil seal.

SST 09310-35010

NOTE: When assembling a new oil seal for the oil pump screw, position the flat surface upward.

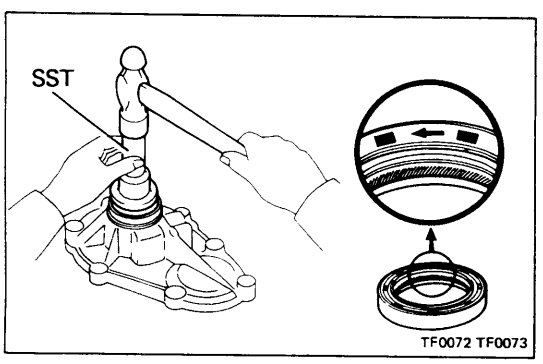

(c) Using SST, drive in a new oil seal.

SST 09325-20010

NOTE: Take note of the groove direction and be careful not to interchange this seal with the front drive gear oil seal. This oil seal has one arrow mark pointing counterclockwise to distinguish it from the front drive gear oil seal.

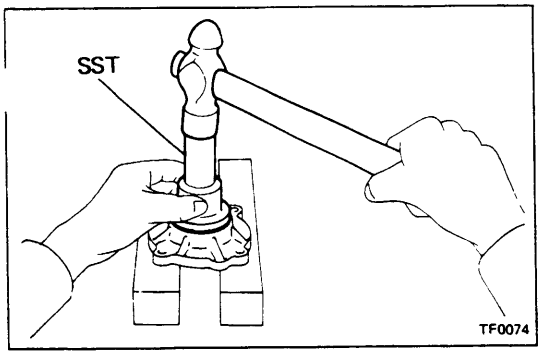

21. INSPECT FRONT DRIVE GEAR OIL SEAL

(a) Check for damage.

(b) Check the oil seal lip for wear or damage.

22. IF NECESSARY, REPLACE FRONT DRIVE GEAR OIL SEAL

(a) Using SST, drive out the oil seal and dust cover.

SST 09325-20010

NOTE: Place the bearing retainer on something soft such as wooden blocks.

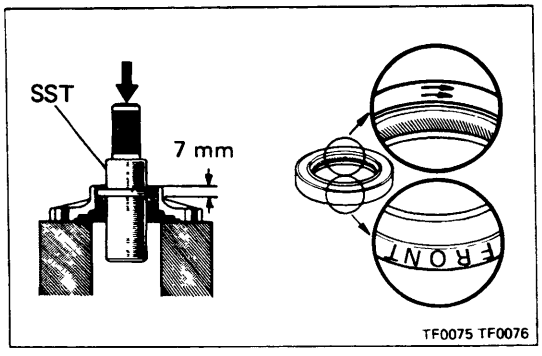

(b) Using SST, drive in a new oil seal to a depth of 7 mm (0.28 in.) from the end.

SST 09325-20010

NOTE: Take note of the groove direction and be careful not to interchange this seal with the output shaft oil seal. This oil seal has two arrow marks pointing clockwise and the word FRONT to distinguish it from the output shaft.

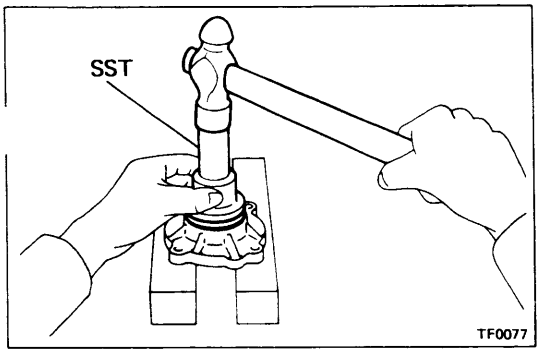

(c) Using SST, drive in a new dust cover.

SST 09325-20010

23. INSPECT TRANSFER INDICATOR SWITCH

Using an ohmmeter, check the continuity between both terminals when the plunger is pushed in.

If there is no continuity, replace the switch.

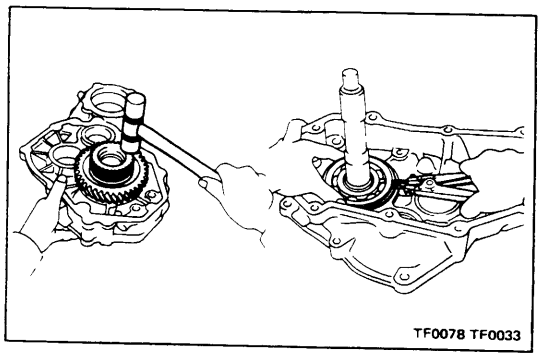
TF0078 TF0033

ASSEMBLY OF TRANSFER

(See pages TF-5, 6)

1. INSTALL OUTPUT SHAFT TO FRONT CASE

(a) Using a plastic hammer, install the output shaft to the front case.

NOTE: Place the front case on something soft such as wooden blocks.

(b) Using snap ring pliers, install the snap ring.

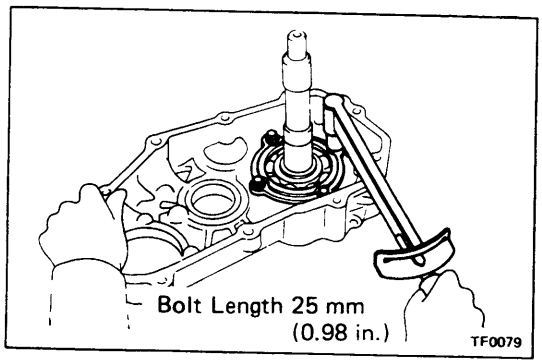

TF0079

2. INSTALL BEARING RETAINER TO FRONT CASE

Install the bearing retainer with four bolts. Torque the bolts.

Torque: 130 kg-cm (9 ft-lb, 13 N·m)

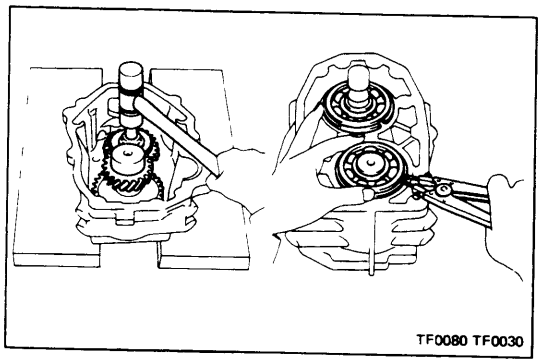
TF0080 TF0030

3. INSTALL INPUT GEAR AND COUNTER GEAR TO REDUCTION GEAR CASE

(a) Using a plastic hammer, install the input gear and counter gear to the reduction gear case.

NOTE: Place the reduction gear case on something sott such as wooden bolcks.

(b) Using snap ring pliers, install the snap rings.

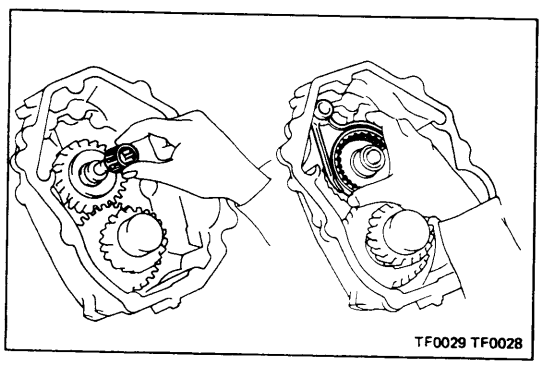
TF0029 TF0028

4. INSTALL ROLLER BEARING ON INPUT SHAFT

5. INSTALL NO.2 HUB SLEEVE AND NO.2 SHIFT FORK ON INPUT SHAFT

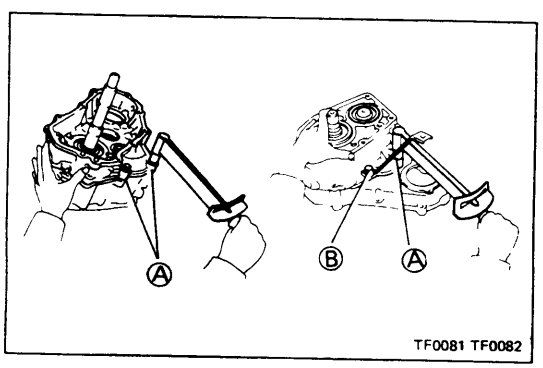

TF0081 TF0082

6. INSTALL REDUCTION GEAR CASE WITH NEW GASKET TO FRONT CASE

(a) Place a new gasket on the front case.

(b) Install the reduction gear case together with the input gear and counter gear.

(c) Install and torque the bolts as shown in the figure.

Torque:

Ⓐ **Bolt length 47 mm (1.85 in.)**
400 kg-cm (29 ft-lb, 39 N·m)

Ⓑ **Bolt length 49 mm (1.93 in.)**
400 kg-cm (29 ft-lb, 39 N·m)

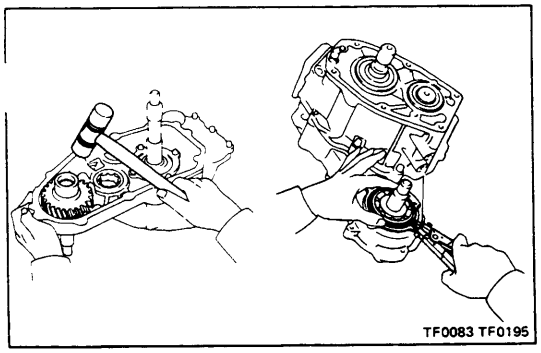

7. INSTALL FRONT DRIVE GEAR

(a) Using a plastic hammer, install the front drive gear.

(b) Using snap ring pliers, install the snap ring.

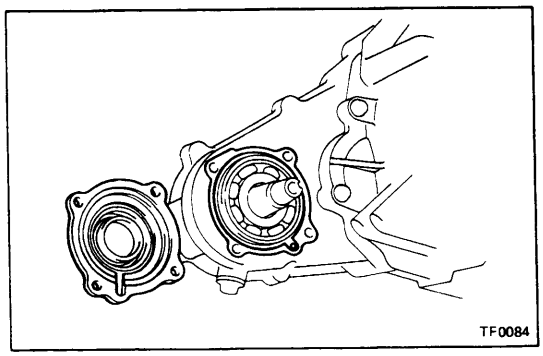

8. INSTALL BEARING RETAINER WITH NEW GASKET

(a) Place a new gasket on the front case.

(b) Apply MP grease to the oil seal.

(c) Install the bearing retainer.

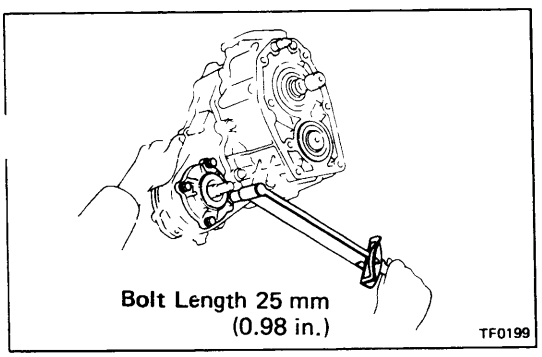

(d) Install and torque the bolts.

Torque: 195 kg-cm (14 ft-lb, 19 N·m)

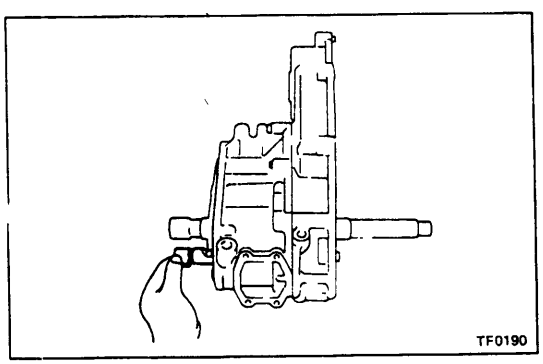

9. INSTALL HIGH-LOW SHIFT FORK SHAFT

Insert the high-low shift fork shaft to the No.2 shift fork.

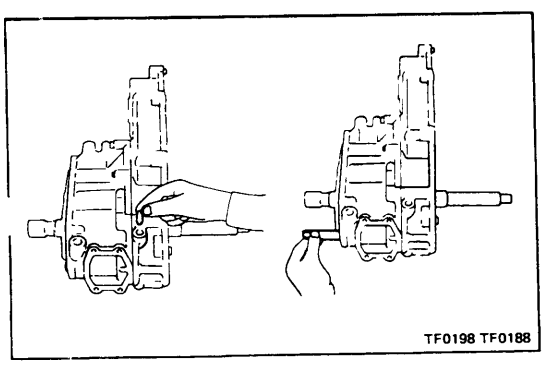

10. INSTALL INTERLOCK PIN AND FRONT DRIVE SHIFT FORK SHAFT

(a) Install the interlock pin.

(b) Install the front drive shift fork shaft with the two grooves facing outward.

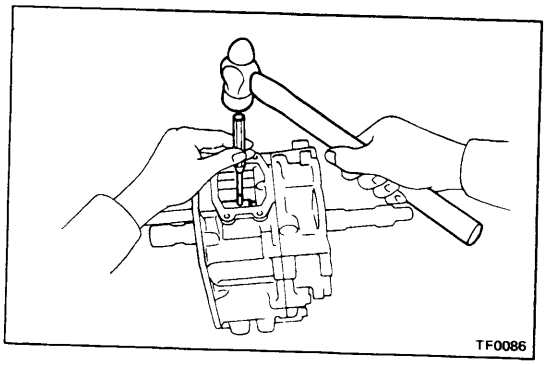

11. INSTALL SLOTTED SPRING PINS

(a) Align slotted spring holes in the forks with the holes in the shafts.

(b) Using a pin punch, drive in slotted spring pins.

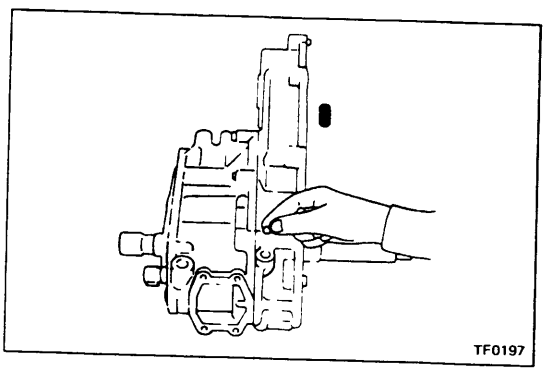

12. INSTALL TWO BALLS, SPRINGS AND PLUGS

(a) Install the ball and spring.

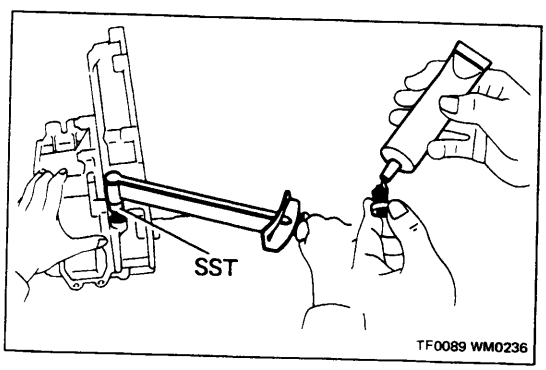

(b) Apply liquid sealer to the screw or the plug.

(c) Using SST, install and torque the plug.

SST 09313-30021

Torque: 130 kg-cm (9 ft-lb, 13 N·m)

(d) Install the ball, spring and plug to the opposite side.

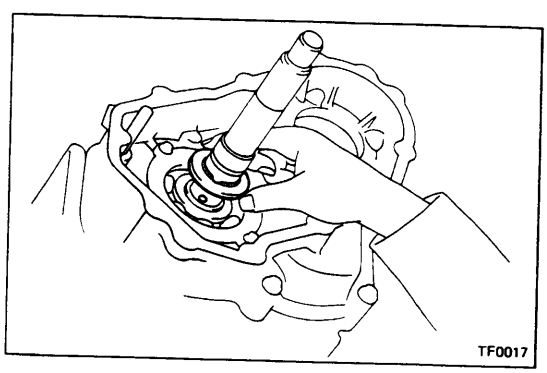

13. INSTALL LOCKING BALL AND NO.2 SPACER

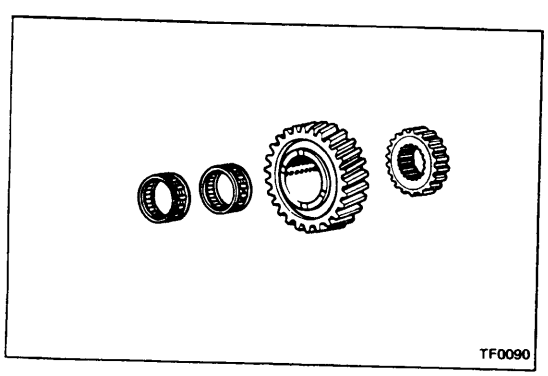

14. INSTALL NEEDLE ROLLER BEARINGS, TRANSFER LOWER GEAR AND CLUTCH HUB

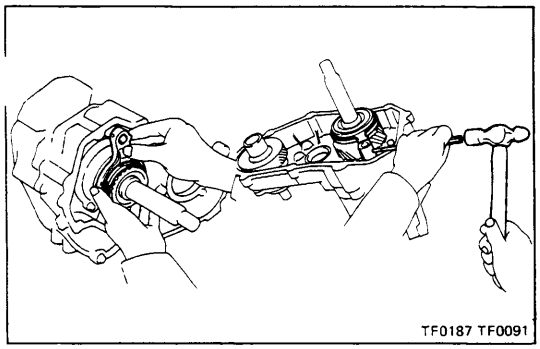

15. INSTALL NO.1 SHIFT FORK AND HUB SLEEVE

(a) Install the No.1 shift fork together with the hub sleeve to the front drive shift fork shaft.

(b) Align the slotted pin hole in the fork with the hole in the shaft.

(c) Using a pin punch and hammer, install the slotted spring pin.

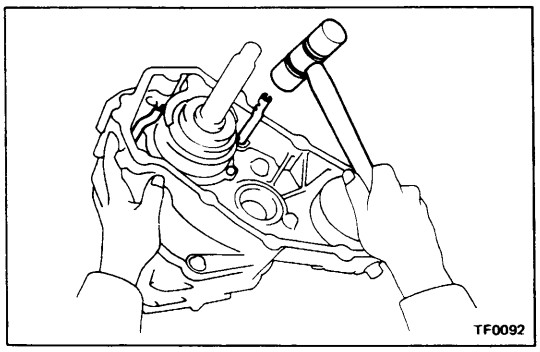

16. INSTALL OIL PIPES

Install the two oil pipes with the cutout side positioned upward.

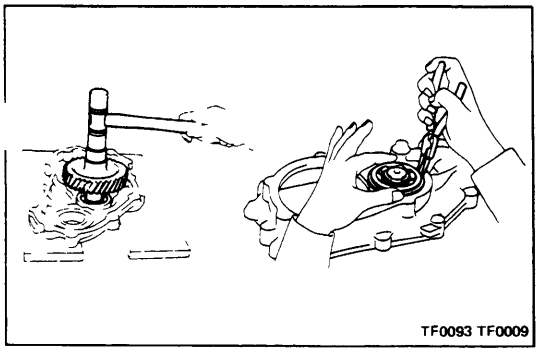

17. INSTALL IDLER GEAR TO REAR CASE

(a) Using a plastic hammer, install the idler gear to the rear case.

NOTE: Place the rear case on something soft such as wooden blocks.

(b) Using snap ring pliers, install the snap ring.

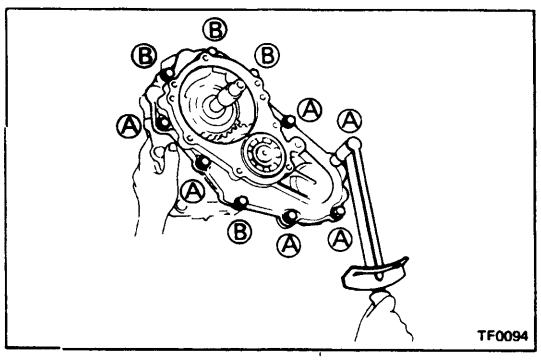

18. INSTALL REAR CASE WITH NEW GASKET

(a) Place a new gasket on the front case.

(b) Install the rear case together with the idler gear.

(c) Install and torque the bolts as shown in the figure.

Torque:

Ⓐ	**Bolt length**	**47 mm (1.85 in.)**
		400 kg-cm (29 ft-lb, 39 N·m)
Ⓑ	**Bolt length**	**112 mm (4.41 in.)**
		400 kg-cm (29 ft-lb, 39 N·m)

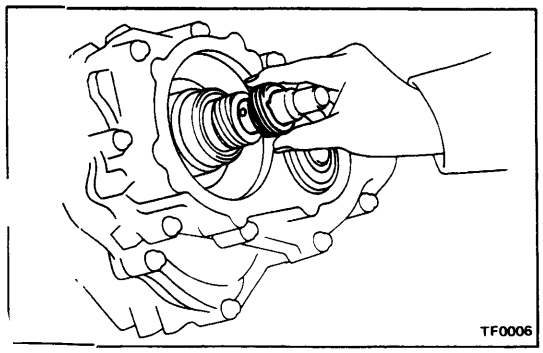

19. INSTALL BEARING, OIL PUMP SCREW, LOCKING BALL AND SPEEDOMETER DRIVE GEAR

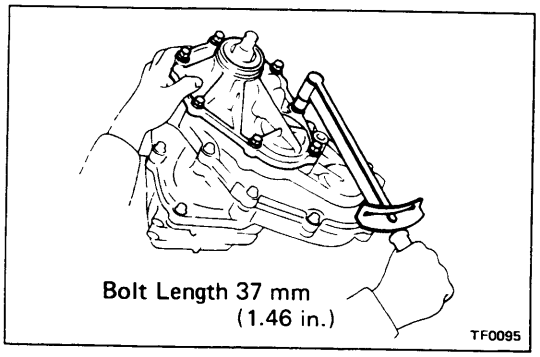

20. INSTALL EXTENSION HOUSING WITH NEW GASKET

(a) Place a new gasket to the rear case.

(b) Apply MP grease to the two oil seals.

(c) Install the extension housing with seven bolts. Torque the bolts.

Torque: 400 kg-cm (29 ft-lb, 39 N·m)

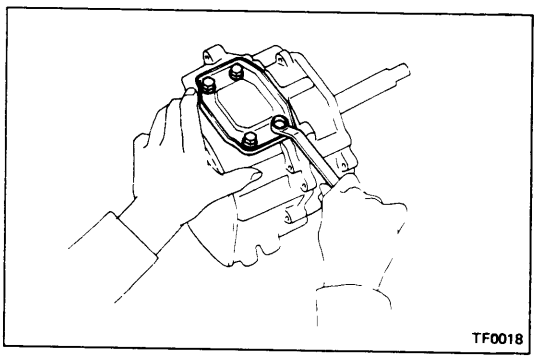

21.-1 (22R Engine Vehicle)
INSTALL TRANSFER CASE COVER

Torque: 90 kg-cm (78 in.-lb, 8.8 N·m)

21.-2 (22R-EC Engine Vehicle)
INSTALL SHIFT LEVER RETAINER

Torque: 130 kg-cm (9 ft-lb, 13 N·m)

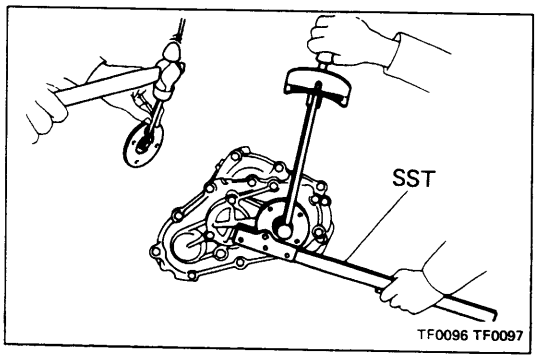

22. INSTALL REAR COMPANION FLANGE

(a) Install the companion flange to the output shaft.

(b) Using SST to hold the flange, install the washer and nut. Torque the nut.

SST 09330-00020

Torque: 1,250 kg-cm (90 ft-lb, 123 N·m)

(c) Stake the nut.

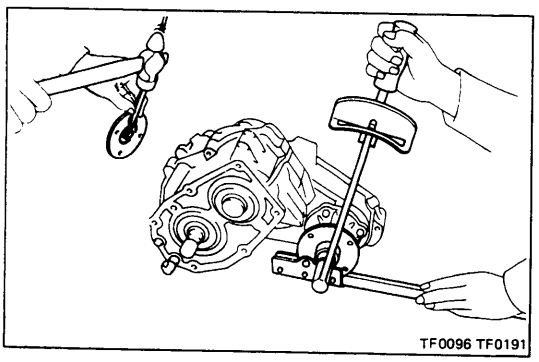

23. INSTALL FRONT COMPANION FLANGE

(a) Install the companion flange to the front drive gear.

(b) Using SST to hold the flange, install the washer and nut. Torque the nut.

SST 09330-00020

Torque: 1,250 kg-cm (90 ft-lb, 123 N·m)

(c) Stake the nut.

24. INSTALL TRANSFER INDICATOR SWITCH WITH WASHER

25. INSTALL SPEEDOMETER DRIVEN GEAR

Secure the gear with the lock plate and bolt.

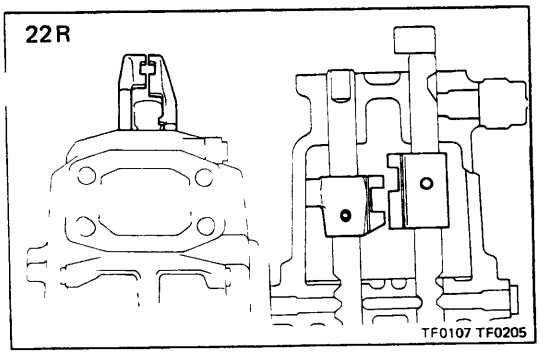

INSTALLATION OF TRANSFER

1. INSTALL TRANSFER AND PROPELLER SHAFT UPPER DUST COVER TO TRANSMISSION WITH NEW GASKET

(a) Shift the two shift fork shafts to the high-four position.

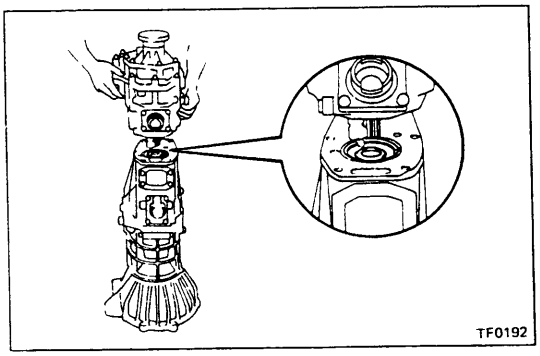

(b) Apply MP grease to the adapter oil seal.

(c) Place a new gasket to the transfer adapter.

(d) Install the transfer to the transmission.

NOTE: Take care not to damage the oil seal by the input gear spline when installing the transfer.

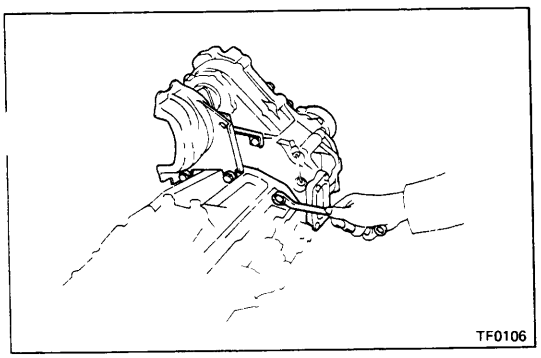

(e) Install and torque the bolts with the propeller shaft upper dust cover.

Torque: 400 kg-cm (29 ft-lb, 39 N·m)

(f) Install the dust cover bolts to the bracket.

NOTE: There are two bolt lengths; 43 mm (used for the dust cover) and 39 mm.

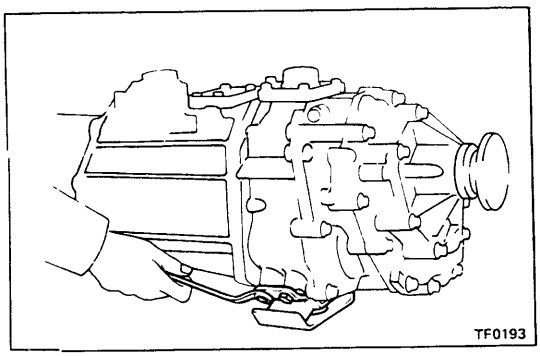

2. INSTALL ENGINE REAR MOUNTING

Torque: 260 kg-cm (19 ft-lb, 25 N·m)

3. PLACE TRANSMISSION WITH TRANSFER AT INSTALLATION POSITION

(a) Support the transmission with a jack.

(b) Align the input shaft spline with the clutch disc, and push the transmission with the transfer fully into position.

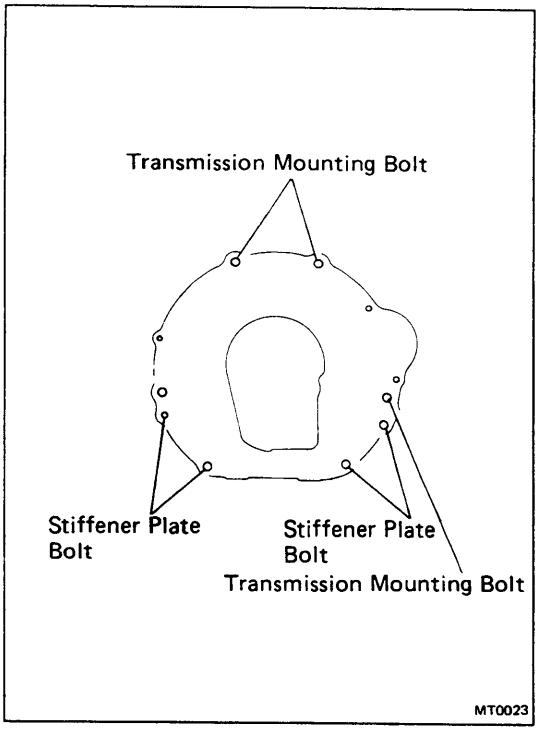

4. **INSTALL TRANSMISSION BOLTS AND STIFFENER BOLTS**

Torque:
Transmission Mounting Bolt
730 kg-cm (53 ft-lb, 72 N·m)
Stiffener plate Bolt
380 kg-cm (27 ft-lb, 37 N·m)

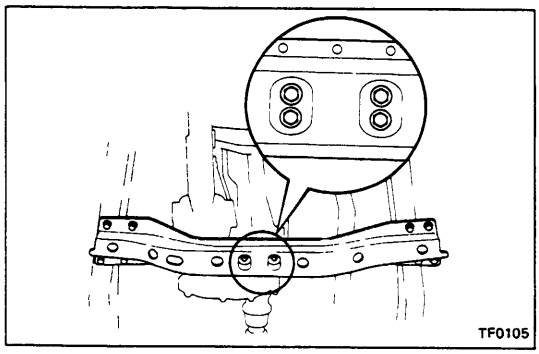

5. **INSTALL FRAME CROSSMEMBER NO.2**

(a) Raise the transmission slightly with a jack.

(b) Install the frame crossmember No.2 to the side frame with the bolts.
Torque the bolts.

Torque: 970 kg-cm (70 ft-lb, 95 N·m)

(c) Lower the transmission and transfer.

(d) Install the four mounting bolts to the engine rear mounting. Torque the bolts.

Torque: 130 kg-cm (9 ft-lb, 13 N·m)

6. **REMOVE PIECE OF WOOD FROM FRONT AXLE**

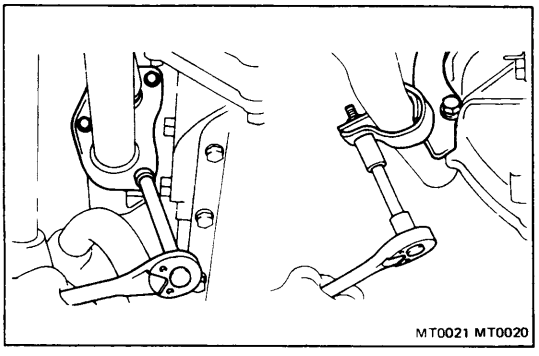

7. **INSTALL EXHAUST PIPE, BRACKET AND PIPE**

(a) Install the exhaust pipe to the manifold.

(b) Install the pipe bracket to the clutch housing. Torque the bolts.

Torque: Upper 380 kg-cm (27 ft-lb, 37 N·rn)
Lower 700 kg-cm (51 ft-lb, 69 N·rn)

(c) Install the exhaust pipe clamp.

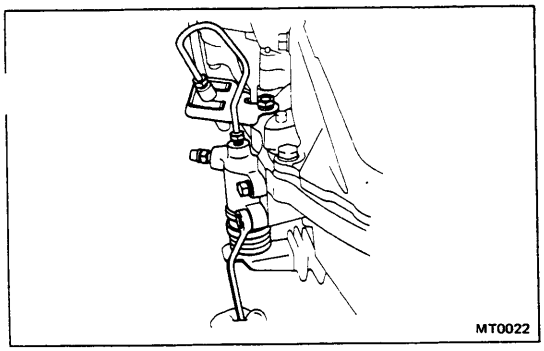

8. INSTALL STARTER LOWER MOUNTING BOLT AND RELEASE CYLINDER TUBE BRACKET

9. INSTALL CLUTCH RELEASE CYLINDER
   Torque: 120 kg-cm (9 ft-lb, 12 N·m)

10. CONNECT SPEEDOMETER CABLE, BACK-UP LIGHT SWITCH CONNECT AND TRANSFER INDICATOR SWITCH CONNECTOR

11. CONNECT PROPELLER SHAFT
    (See page PR-11)

12. FILL TRANSMISSION AND TRANSFER WITH OIL
    Oil type: API GL-4 or GL-5 SAE 75W90 or 80W90
    Quantity:
    Transmission
    3.9 liters (4.1 US qts, 3.4 Imp. qts)
    Transfer
    1.6 liters (1.7 US qts, 1.4 Imp. qts)

13. LOWER VEHICLE

14. INSTALL STARTER UPPER MOUNTING NUT

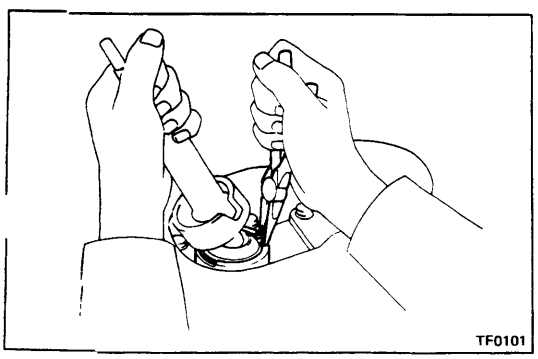

15. INSTALL TRANSFER SHIFT LEVER
    (a) Apply MP grease to the transfer shift lever.
    (b) Using pliers, install the shift lever.

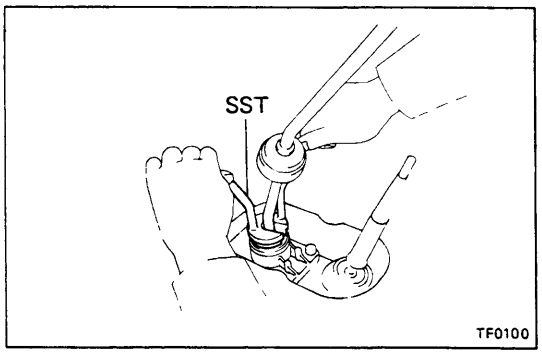

16. INSTALL TRANSMISSION SHIFT LEVER

(a) Apply MP grease to the transmission shift lever.

(b) (22R Engine Vehicle)
Using SST, install the shift lever.

SST 09305-20012

(22R-EC Engine Vehicle)
Install the shift lever with four bolts.

17. CONNECT BATTERY CABLE TO NEGATIVE TERMINAL

18. PERFORM ROAD TEST

Check for abnormal noise and smooth operation.

PROPELLER SHAFT

	Page
PRECAUTIONS	PR-2
TROUBLESHOOTING	PR-2
PROPELLER SHAFT	PR-2

PRECAUTIONS

Be careful not to grip the propeller shaft tube too tightly in a vise as this will cause deformation.

TROUBLESHOOTING

Problem	Possible cause	Remedy	Page
Noise	Sleeve yoke spline worn	Replace sleeve yoke	PR-5,7
	Center bearing worn	Replace center bearing	PR-5
	Spider bearing worn or stuck	Replace spider bearing	PR-7
Vibration	Propeller shaft runout	Replace propeller shaft	PR-3
	Propeller shaft unbalance	Balance propeller shaft	
	Transmission extension housing rear bushing worn	Replace bushing	MT-3
	Sleeve yoke spline stuck	Replace sleeve yoke	PR-5, 7

PROPELLER SHAFT

COMPONENTS

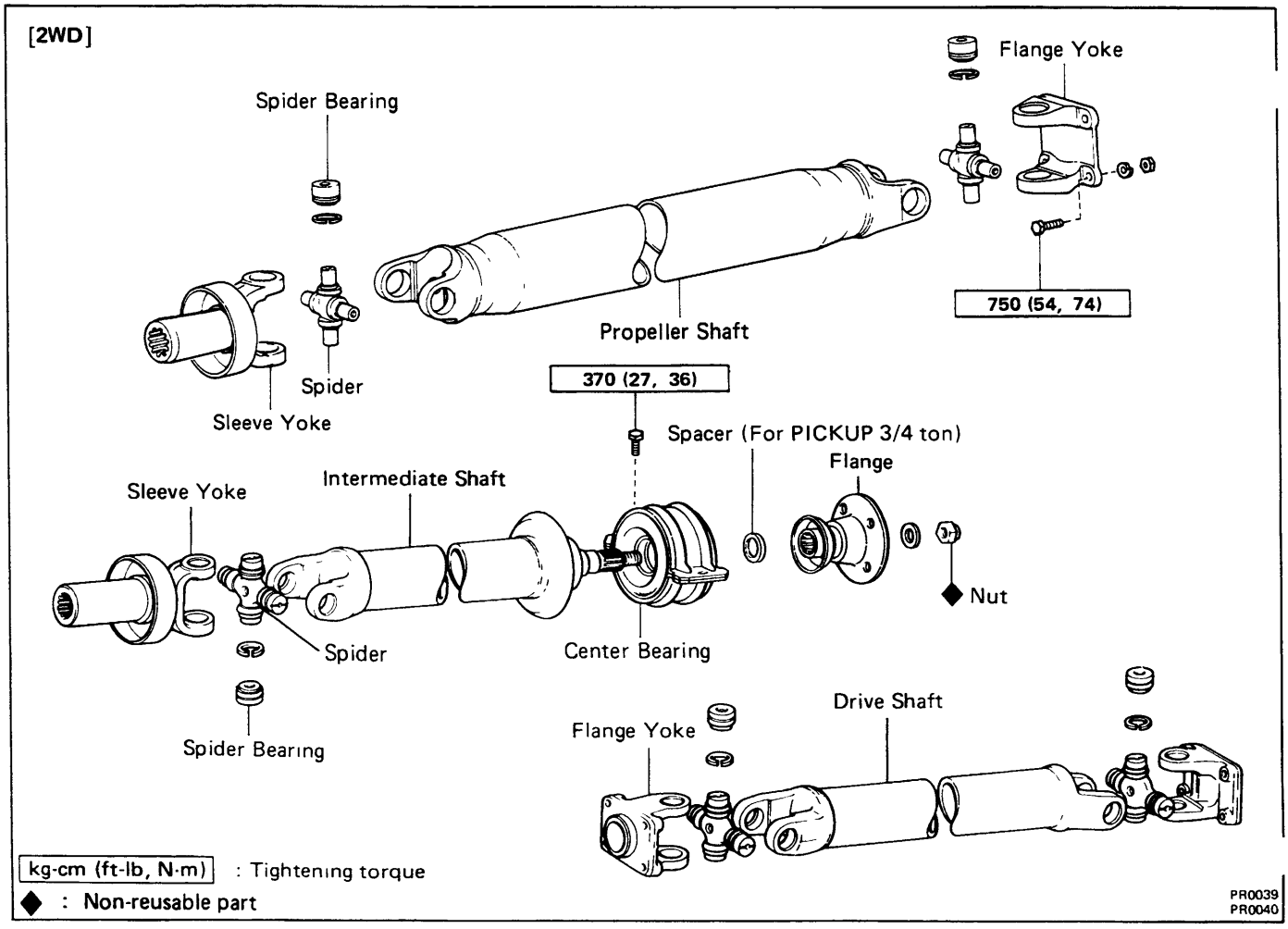

COMPONENTS (Cont'd)

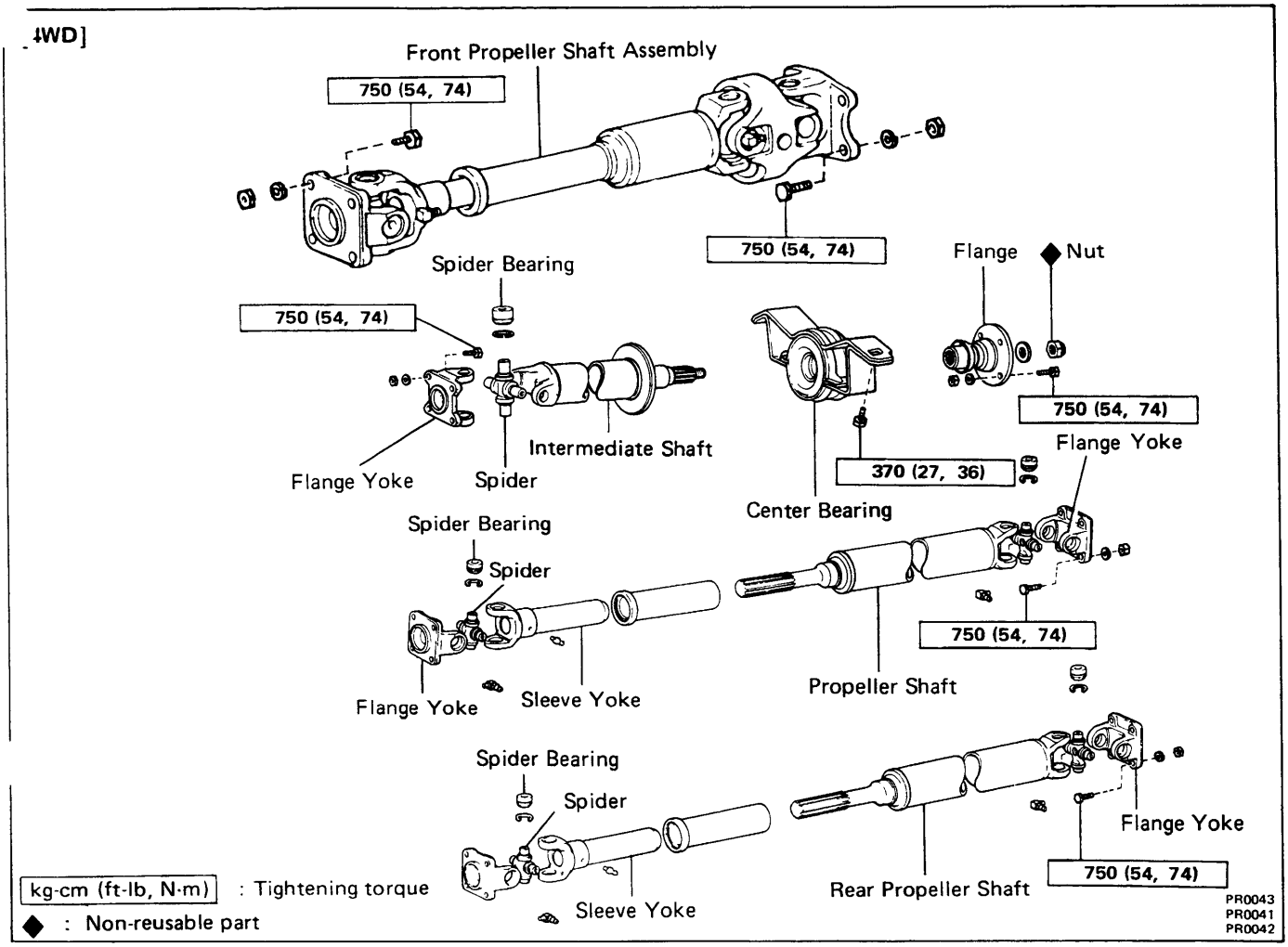

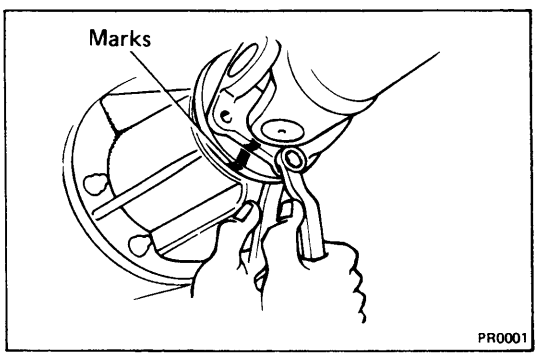

REMOVAL OF PROPELLER SHAFT

(2WD)

1. **DISCONNECT PROPELLER SHAFT FLANGE FROM COMPANION FLANGE ON DIFFERENTIAL**
   (a) Put alignment marks on the flanges.
   (b) Remove the four bolts and nuts.

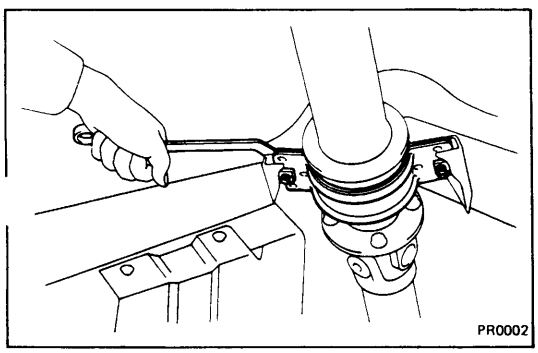

2. **REMOVE CENTER SUPPORT BEARING FROM FRAME CROSSMEMBER (THREE-JOINT TYPE)**

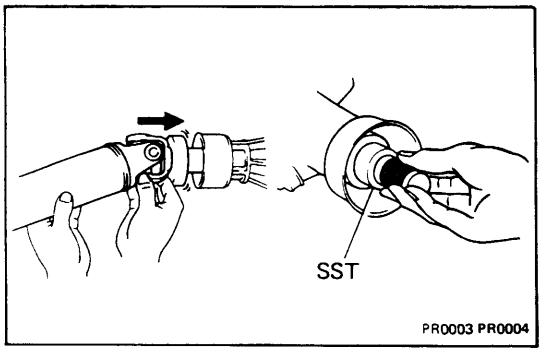

3. REMOVE PROPELLER SHAFT FROM TRANSMISSION

(a) Pull the yoke from the transmission.

(b) Insert SST in the transmission to prevent oil leakage.

SST 09325-20010

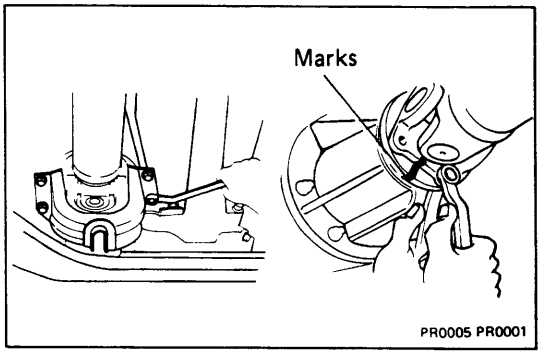

(4WD)

1. REMOVE FRONT PROPELLER SHAFT NO.2 DUST COVER

2. DISCONNECT PROPELLER SHAFT FLANGE FROM COMPANION FLANGE ON DIFFERENTIAL

(a) Put alignment marks on the flanges.

(b) Remove the four bolts and nuts.

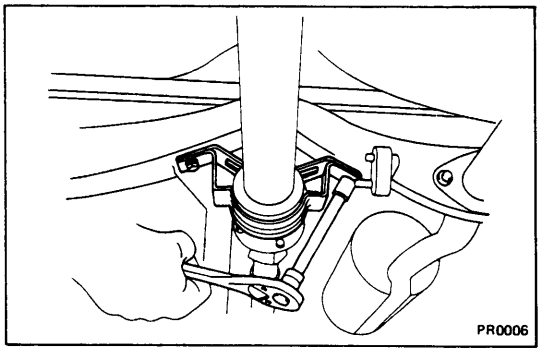

3. REMOVE CENTER SUPPORT BEARING FROM FRAME CROSSMEMBER (THREE-JOINT TYPE)

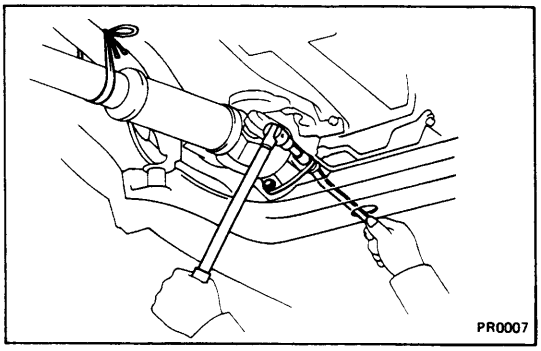

4.-1 FRONT PROPELLER SHAFT

(a) Suspend the front side of the propeller shaft to the exhaust pipe.

(b) Put alignment marks on the flange.

(c) Remove the four bolts and nuts.

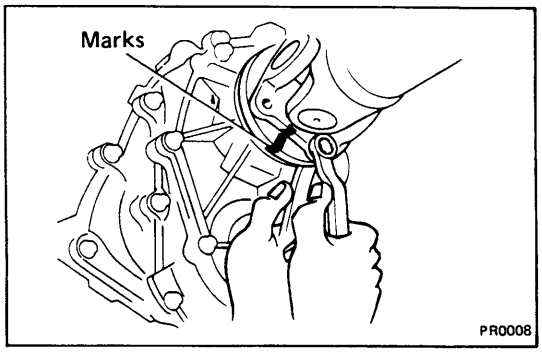

4.-2 REAR PROPELLER SHAFT
DISCONNECT PROPELLER SHAFT FLANGE FROM COMPANION FLANGE ON TRANSFER

(a) Put alignment marks on the flanges.

(b) Remove the four bolts and nuts.

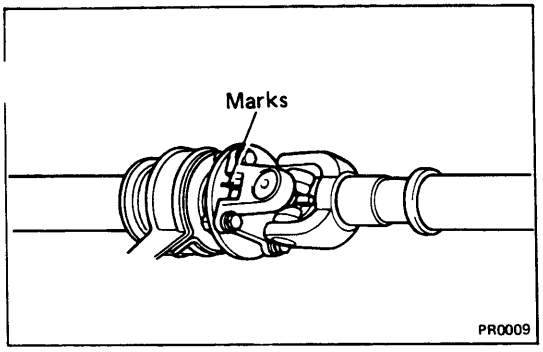

DISASSEMBLY OF PROPELLER SHAFT

1. SEPARATE PROPELLER SHAFT AND INTERMEDIATE SHAFT

(a) Put alignment marks on the flanges.

(b) Remove the four bolts and nuts.

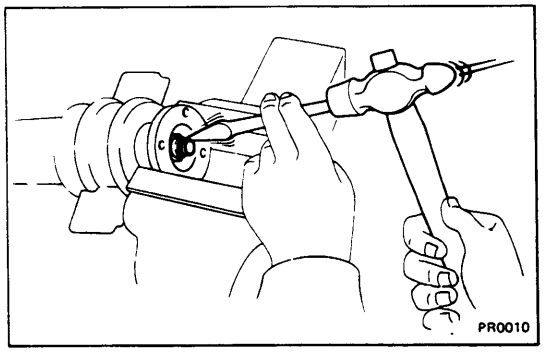

2. REMOVE CENTER SUPPORT BEARING FROM INTERMEDIATE SHAFT

(a) Using a hammer and chisel, loosen the staked part of the nut.

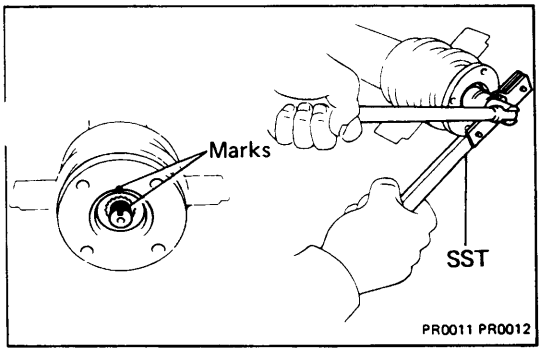

(b) Using SST to hold the flange, remove the nut.

SST 09330-00020

(c) Put alignment marks on the flange and shaft.

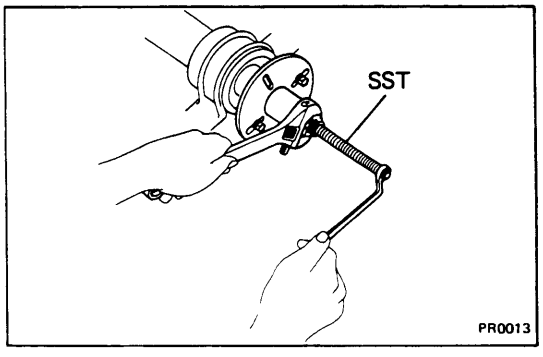

(d) Using SST, remove the flange from the intermediate shaft.

SST 09557-22022

3. REMOVE SLEEVE YOKE FROM PROPELLER SHAFT (4WD)

(a) Place alignment marks on the sleeve yoke and shaft.

(b) Pull out the sleeve yoke from the shaft.

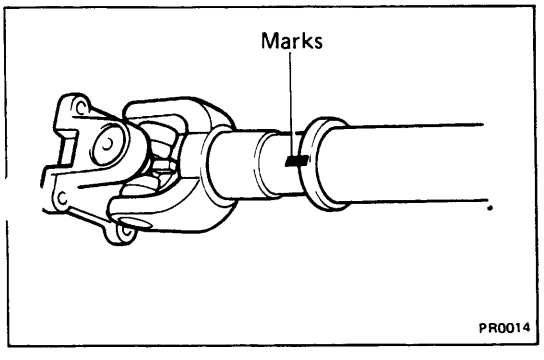

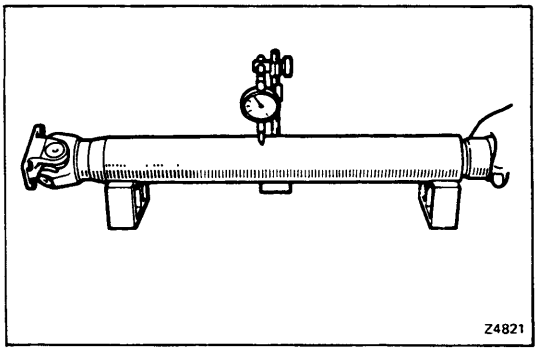

INSPECTION OF PROPELLER SHAFT COMPONENTS

1. **INSPECT PROPELLER AND INTERMEDIATE SHAFTS FOR DAMAGE OR RUNOUT**

   If shaft runout is greater than maximum, replace the shaft.

   Maximum runout: 0.8 mm (0.031 in.)

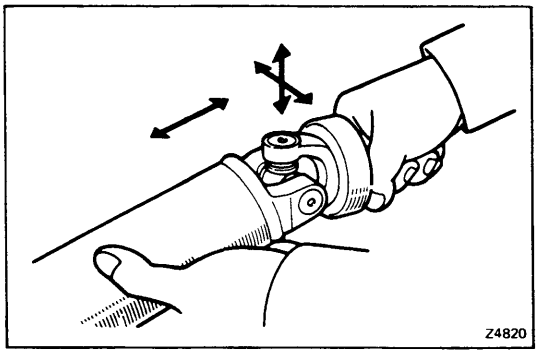

2. **INSPECT SPIDER BEARINGS**

   (a) Inspect the spider bearings for wear or damage.

   (b) Check the spider bearing axial play by turning the yoke while holding the shaft tightly.

   Bearing axial play:

   2-Joint type Less than 0.05 mm (0.0020 in.)

   If necessary, replace the spider bearing.

   3-Joint type Less than 0.05 mm (0.0020 in.)

   If necessary, replace the propeller shaft.

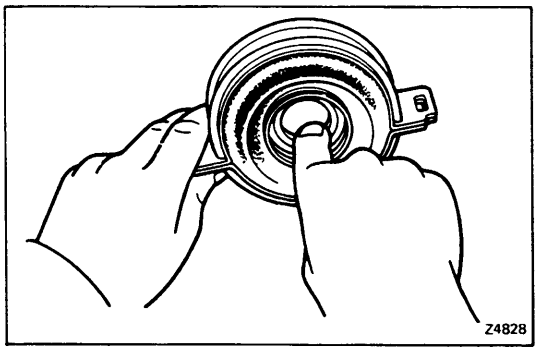

3. **INSPECT CENTER SUPPORT BEARING FOR WEAR OR DAMAGE**

   Check that the bearing turns freely.

   If the bearing is damaged, worn, or does not turn free replace it.

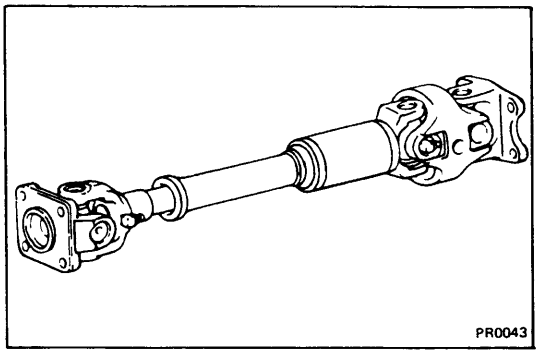

4. **INSPECT FRONT PROPELLER SHAFT**

   (a) Inspect the shaft for wear or damage.

   (b) Inspect the double cardan joint for wear or damage.

   NOTE: If any problem is found, replace the front propeller shaft assembly.

REPLACEMENT OF SPIDER BEARING

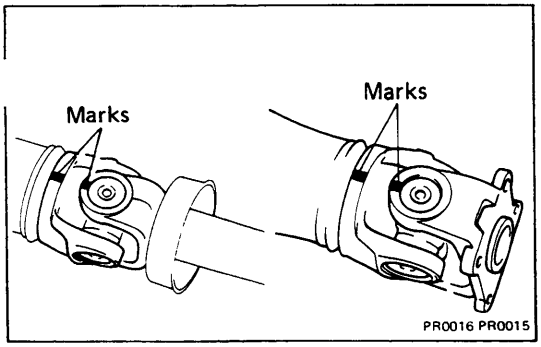

1. PLACE ALIGNMENT MARKS ON SHAFT AND FLANGE OR YOKE

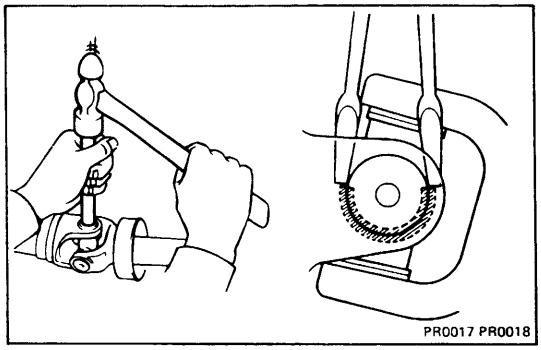

2. REMOVE SNAP RINGS

(a) Slightly tap in the bearing outer races.

(b) Using two screwdrivers, remove the four snap rings from the grooves.

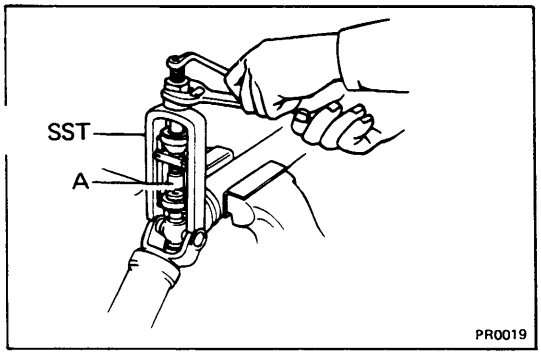

3. REMOVE SPIDER BEARINGS

(a) Using SST, push out the bearing from the propeller shaft.

SST 09332-25010

NOTE: Sufficiently raise the part indicated by A so that it does not come into contact with the bearing.

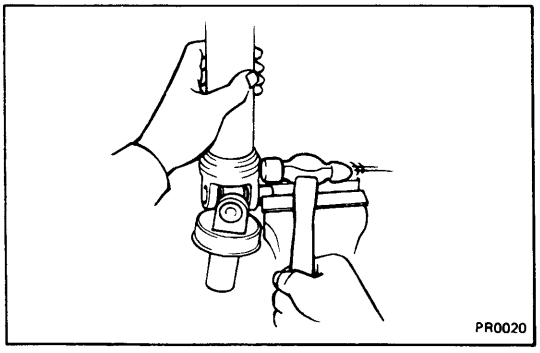

(b) Clamp the bearing outer race in a vise and tap off the propeller shaft with a hammer.

NOTE: Remove the bearing on the opposite side in the same procedure.

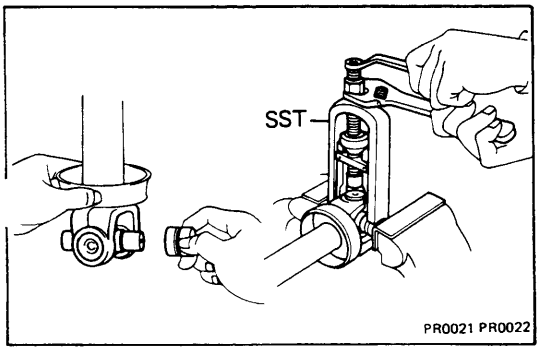

(c) Install the two removed bearing outer races to the spider.

(d) Using SST, push out the bearing from the yoke.

SST 09332-25010

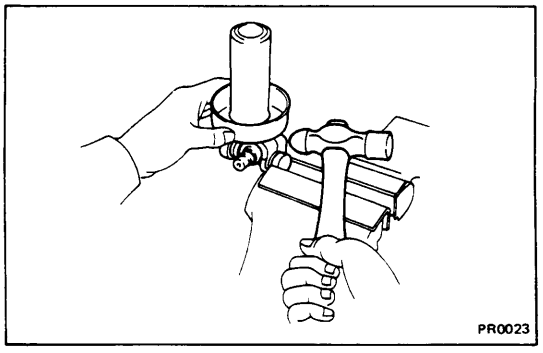

(e) Clamp the outer bearing race in a vise and tap off the yoke with a hammer.

NOTE: Remove the bearing on the opposite side in t. same procedure.

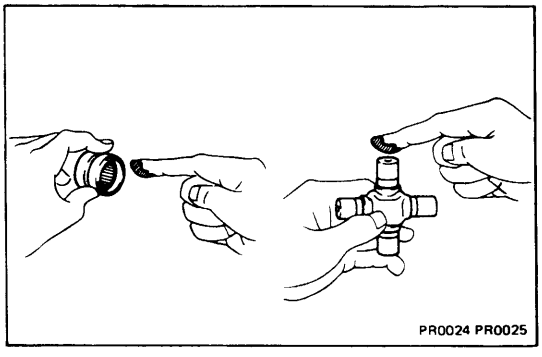

4. INSTALL SPIDER BEARINGS

(a) Apply MP grease to the spider and bearings.

NOTE: Be careful not to apply too much grease.

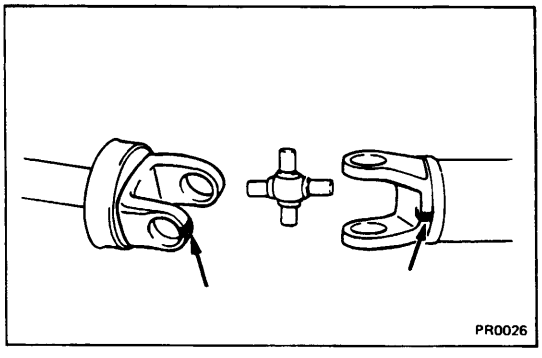

(b) Align the marks on the yoke and shaft.

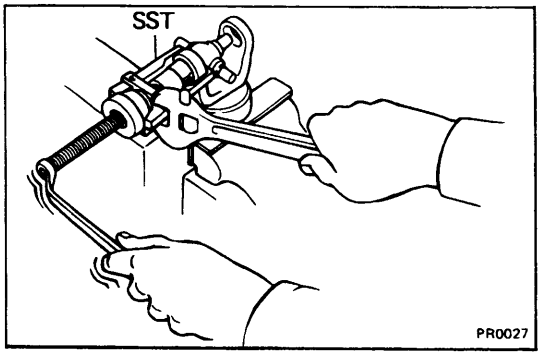

(c) Fit the new spider into the yoke.

(d) Using SST, install the new bearings on the spider.

SST 09332-25010

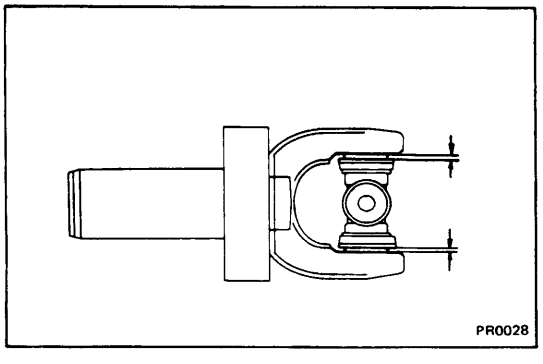

(e) Using SST, adjust both bearings so that the snap ring grooves are at maximum and equal widths.

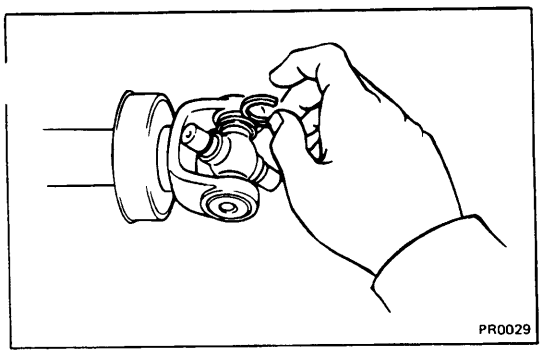

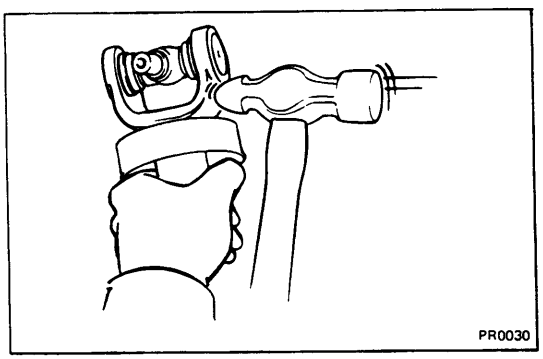

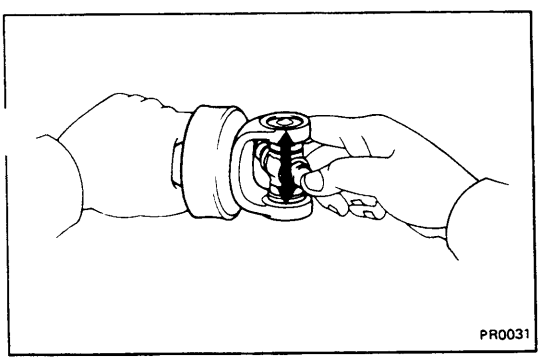

5. INSTALL SNAP RINGS

(a) Install two snap rings of equal thickness which will allow 0 — 0.05 mm (0 — 0.0020 in.) axial play.

NOTE: Do not reuse the snap rings.

Thickness of snap ring

	Color	Thickness mm (in.)
RN50L-KRA	—	2.375—2.425 (0.0935—0.0955)
	Brown	2.425—2.475 (0.0955—0.0974)
	Blue	2.475—2.525 (0.0974—0.0994)
Ex. RN50L-KRA	—	1.475—1.525 (0.0581—0.0600)
	Brown	1.525—1.575 (0.0600—0.0620)
	Blue	1.575—1.625 (0.0620—0.0640)

(b) Using a hammer, tap the yoke until there is no clearance between the bearing outer race and snap ring.

6. CHECK SPIDER BEARING

(a) Check that the spider bearing moves smoothly.

(b) Check the spider bearing axial play.

Bearing axial play: Less than 0.05 mm (0.0020 in.)

NOTE: Install new spider bearings on the shaft side in the procedure described above.

NOTE: When replacing the rear propeller shaft spider on 4WD vehicles, be sure that the grease fitting assembly hole is facing in the direction shown in the figure.

SPIDER GREASE FITTING ASSEMBLY DIRECTION FOR 4WD REAR PROPELLER SHAFT

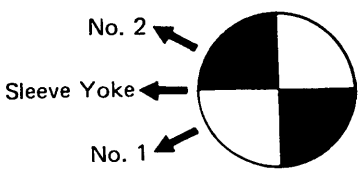

The figure at left shows the locations of the grease fittings as seen from the rear.

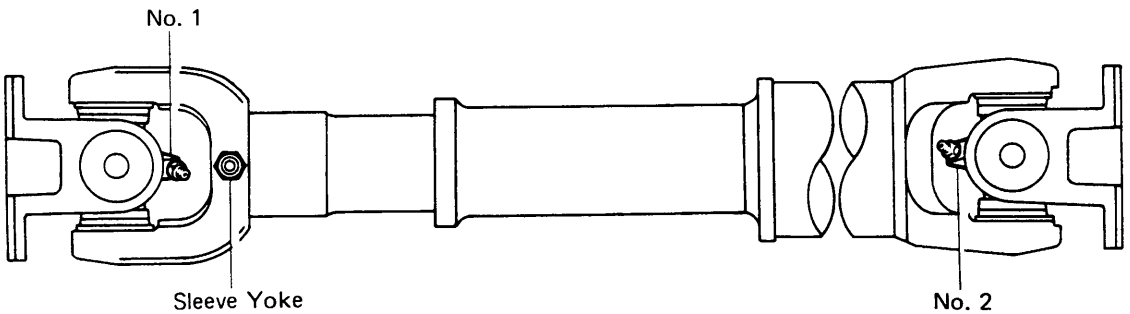

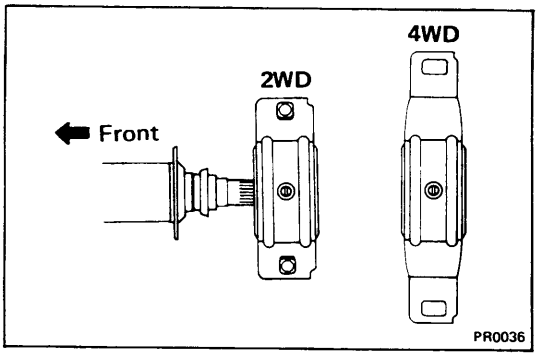

ASSEMBLY OF PROPELLER SHAFT

1. INSTALL CENTER SUPPORT BEARING ON INTERMEDIATE SHAFT

NOTE: Install the center support bearing with the cutout toward the rear.

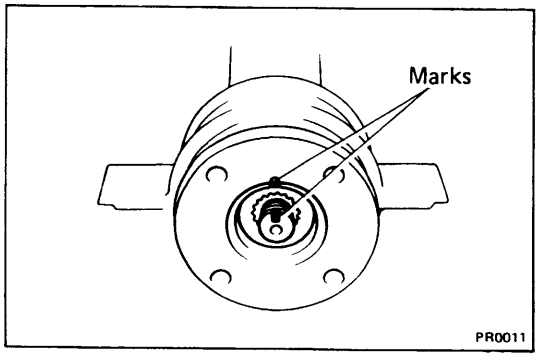

2. INSTALL FLANGE ON INTERMEDIATE SHAFT

(a) Coat the splines of the intermediate shaft with MP grease.

(b) Place the flange on the shaft and align the marks.

NOTE: If replacing either the center flange or intermediate shaft, reassemble them so that the front yoke of the intermediate shaft and the rear yoke of the propeller shaft are facing in the same direction.

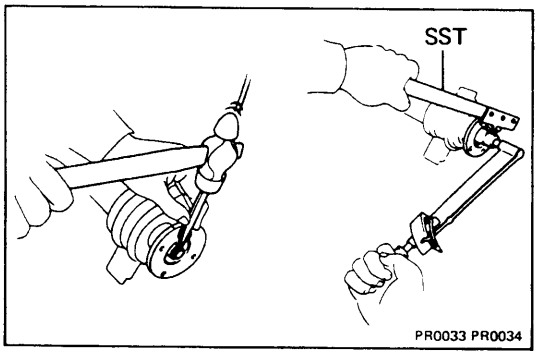

(c) Using SST to hold the flange, press the bearing into position by tightening down a new nut.

SST 09330-00020

Torque: 1,850 kg-cm (134 ft-lb, 181 N·m)

(d) Loosen the nut.

(e) Torque the nut again.

Torque: 700 kg-cm (51 ft-lb, 69 N·m)

(f) Using a hammer and punch, stake the nut.

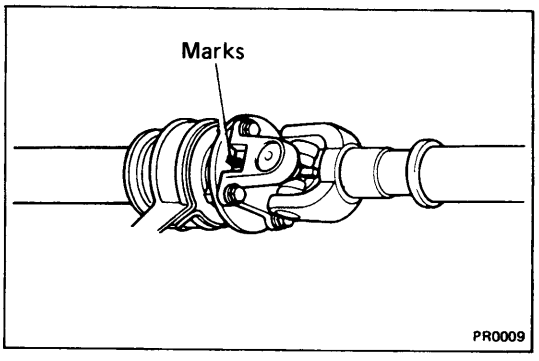

3. INSTALL PROPELLER SHAFT

(a) Align the marks on the flanges and connect the flanges with four bolts and nuts.

NOTE: If replacing either the center flange or intermediate shaft, reassemble them so that the front yoke of the intermediate shaft and the rear yoke of the propeller shaft are facing in the same direction.

(b) Torque the bolts and nuts.

Torque: 750 kg-cm (54 ft-lb, 74 N·m)

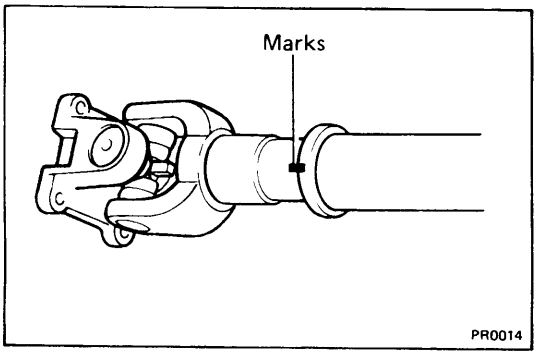

4. INSERT SLEEVE YOKE INTO PROPELLER SHAFT (4WD)

(a) Apply MP grease to the propeller shaft spline and sleeve yoke sliding surface.

(b) Align the marks on the sleeve yoke and propeller shaft.

(c) Insert the sleeve yoke into the propeller shaft.

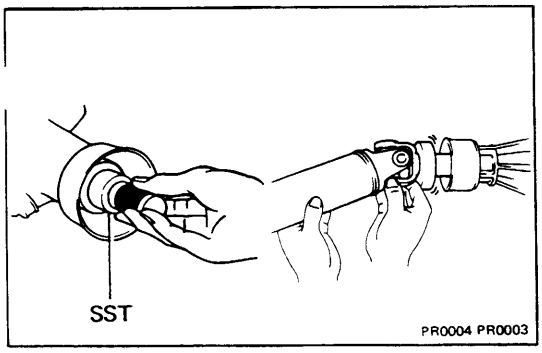

INSTALLATION OF PROPELLER SHAFT

(2WD)

1. INSERT YOKE IN TRANSMISSION

(a) Remove SST.

SST 09325-20010

(b) Push the yoke in to the transmission.

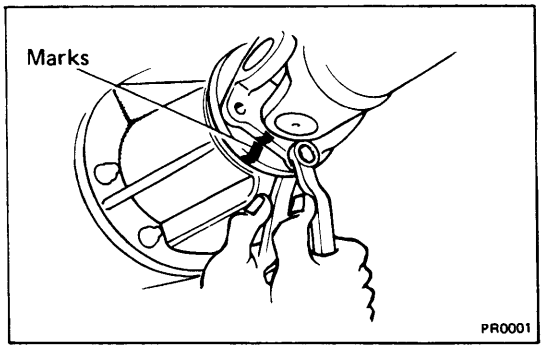

2. CONNECT PROPELLER SHAFT FLANGE TO COMPANION FLANGE ON DIFFERENTIAL

(a) Align the marks on the flanges and connect the flanges with four bolts and nuts.

(b) Torque the bolts and nuts.

Torque: 750 kg-cm (54 ft-lb, 74 N·m)

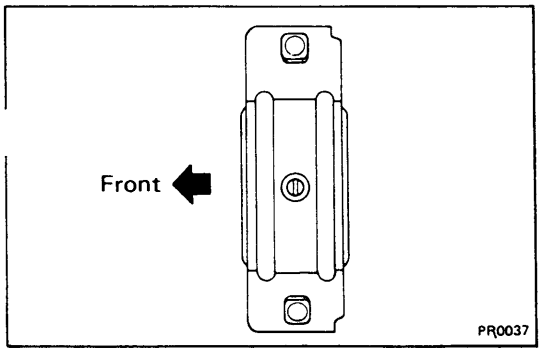

3. INSTALL CENTER SUPPORT BEARING TO FRAME CROSSMEMBER (THREE-JOINT TYPE)

(a) Install the center support bearing to the frame crossmember with two mount bolts finger tight.

(b) Check that the bearing bracket is at right angle to the propeller shaft. Adjust the bracket if necessary.

(c) Check that the center line of the center bearing is set to the center line of the bracket when the vehicle is in a no-load condition. Adjust the bracket if necessary.

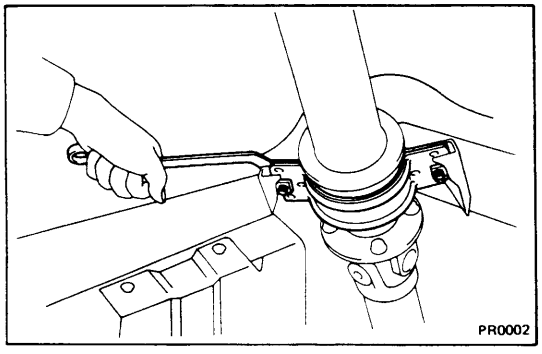

(d) Torque the mount bolts.

Torque: 370 kg-cm (27 ft-lb, 36 N·m)

(4WD)

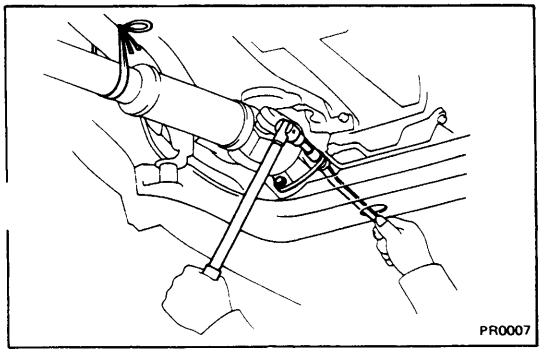

1. CONNECT PROPELLER SHAFT FLANGE TO COMPANION FLANGE ON TRANSFER

(a) Align the marks on the flanges and connect the flanges with four bolts and nuts.

(b) Torque the bolts and nuts.

Torque: 750 kg-cm (54 ft-lb, 74 N·m)

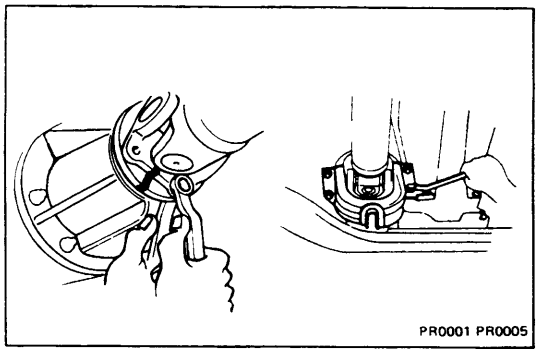
PR0001 PR0005

2. CONNECT PROPELLER SHAFT FLANGE TO COMPANION FLANGE ON DIFFERENTIAL

(a) Align the marks on the flanges and connect the flange with four bolts and nuts.

(b) Torque the bolts and nuts.

Torque: 750 kg-cm (54 ft-lb, 74 N·m)

3. INSTALL FRONT PROPELLER SHAFT NO.2 DUST COVER

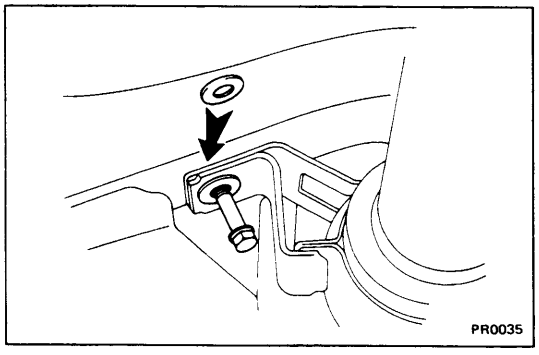
PR0035

4. INSTALL CENTER SUPPORT BEARING TO FRAME CROSSMEMBER (THREE-JOINT TYPE)

(a) Place a height spacer between the frame crossmember and center support bearing, and install the two mount bolts finger tight.

NOTE: Some vehicles do not have a spacer. In this case, it it not necessary to insert one.

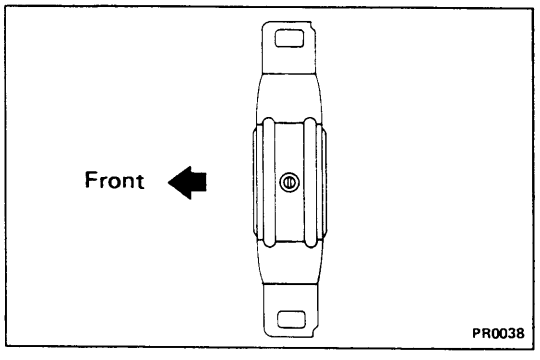

PR0038

(b) Check that the bearing bracket is at right angle to the propeller shaft. If necessary, adjust the bracket.

(c) Check that the center line of the center bearing is set to the center line of the bracket when the vehicle in a no-load condition.

If necessary, adjust the bracket.

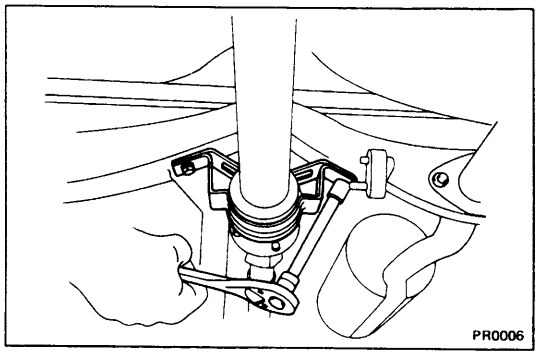
PR0006

(d) Torque the mount bolts.

Torque: 370 kg-cm (27 ft-lb, 36 N·m)

FRONT AXLE AND SUSPENSION

(2WD)	Page
TROUBLESHOOTING	FA-2
FRONT WHEEL ALIGNMENT	FA-3
FRONT AXLE HUB AND STEERING KNUCKLE	FA-6
Front Axle Hub	FA-7
Steering Knuckle	FA-9
FRONT SUSPENSION	FA-12
Ball Joints	FA-13
Torsion Bar Spring	FA-15
Lower Suspension Arm and Shock Absorber	FA-17
Upper Suspension Arm	FA-20
Strut Bar	FA-22
Stabilizer Bar	FA-23

(4WD)	
TROUBLESHOOTING	FA-24
FRONT WHEEL ALIGNMENT	FA-25
FREE WHEELING HUB	FA-28
AUTOMATIC LOCKING HUB	FA-34
FRONT AXLE HUB	FA-43
STEERING KNUCKLE AND AXLE SHAFT	FA-48
FRONT DIFFERENTIAL	FA-59
FRONT SUSPENSION	FA-60
Leaf Spring and Shock Absorber	FA-60
Stabilizer Bar	FA-65
Torque Rod	FA-66

TROUBLESHOOTING (2WD)

Problem	Possible cause	Remedy	Page
Wanders/pulls	Tires worn or improperly inflated	Replace tire or inflate tires to proper pressure	FA-3
	Alignment incorrect	Check front end alignment	FA-3
	Wheel bearing adjusted too tight	Adjust wheel bearing	FA-8
	Front or rear suspension parts loose or broken	Tighten or replace suspension part	
	Steering linkage loosen or worn	Tighten or replace steering linkage	SR-68
	Steering gear out of adjustment or broken	Adjust or repair steering gear	SR-3
Bottoming	Vehicle overloaded	Check loading	
	Shock absorber worn out	Replace shock absorber	FA-17
	Springs weak	Replace spring	FA-15
Sways/pitches	Tires improperly inflated	Inflate tires to proper pressure	FA-3
	Stabilizer bar bent or broken	Inspect stabilizer bar	FA-23
	Shock absorber worn out	Replace shock absorber	FA-17
Front wheel shimmy	Tires worn or improperly inflated	Replace tire or inflate tires to proper pressure	FA-3
	Wheels out of balance	Balance wheels	
	Shimmy damper worn out	Replace steering damper	SR-7?
	Shock absorber worn out	Replace shock absorber	FA-17
	Alignment incorrect	Check front end alignment	FA-3
	Wheel bearings worn or improperly adjusted	Replace or adjust wheel bearings	FA-8
	Ball joints or bushings worn	Inspect ball joints and bushings	FA-13, 18 20
	Steering linkage loosen or worn	Tighten or replace steering linkage	SR-68
	Steering gear out of adjustment or broken	Adjust or repair steering gear	SR-3
Abnormal tire wear	Tires improperly inflated	Inflate tires to proper pressure	FA-3
	Shock absorbers worn out	Replace shock absorber	FA-17
	Alignment incorrect	Check toe-in	FA-5
	Suspension parts worn	Replace suspension part	

FRONT WHEEL ALIGNMENT (2WD)

1. MAKE FOLLOWING CHECKS AND CORRECT ANY PROBLEMS

(a) Check the tires for wear and proper inflation.

Correct tire pressure: kg/cm² (psi, kPa)

Tire Size	Front	Rear
7.00 — 14 — 6 PR	1.7 (24, 167)	2.5 (36, 245)
P195/75 R 14	2.0 (28, 196)	2.45 (35, 240)
205/70 SR 14	1.9 (27, 186)	2.25 (32, 221)
185 R 14 — LT 8 PR	1.8 (26, 177)	4.5 (64, 441)

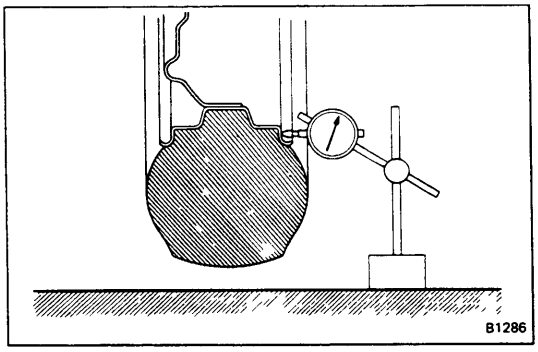

(b) Check the wheel runout.

Lateral runout: Less than 1.2 mm (0.047 in.)

(c) Check the front wheel bearings for looseness.

(d) Check the front suspension for looseness.

(e) Check the steering linkage for looseness.

(f) Use the standard bounce test to check that the front absorbers work properly.

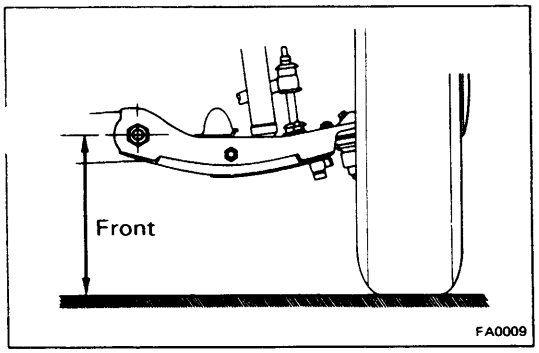

2. MEASURE VEHICLE HEIGHT

If height of the vehicle is not as specified, try to level the vehicle by shaking it down. If it is still not correct, check for bad springs and worn or loose suspensions parts.

Vehicle height: See page A-21

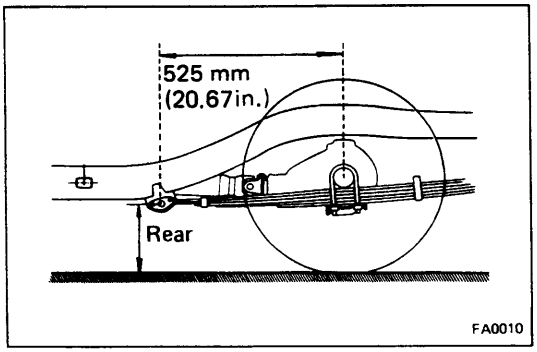

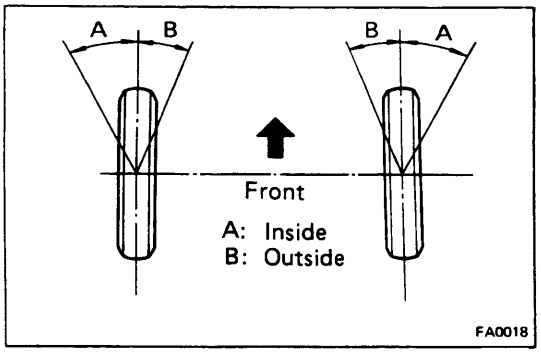

3. ADJUST WHEEL ANGLE

Remove the caps of the knuckle stopper bolts and check the steering angles.

Wheel angle		
Max.	Inside wheel	34° +1° −2°
	Outside wheel	30°
at 20°	Inside wheel	22°15′
	Outside wheel	20°

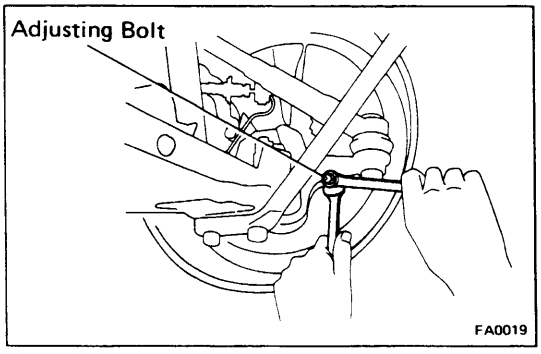

NOTE: When the steering wheel is fully turned, make sure that the wheel is not touching the body or brake flexible hose.

If maximum steering angles differ from standard value, adjust the wheel angle with the knuckle stopper bolts.

Torque: 350 kg-cm (25 ft-lb, 34 N·m)

If the wheel angle still cannot be adjusted within limits, inspect and replace damaged or worn steering parts.

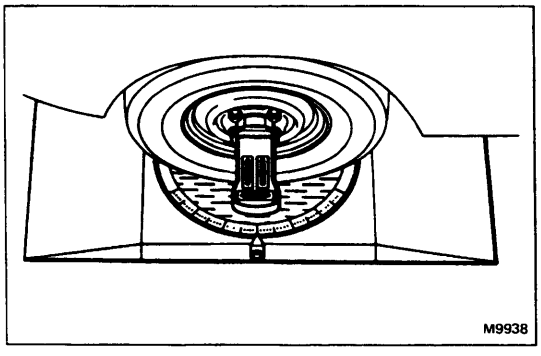

4. INSTALL WHEEL ALIGNMENT EQUIPMENT

Follow the specific instructions of the equipment manufacturer.

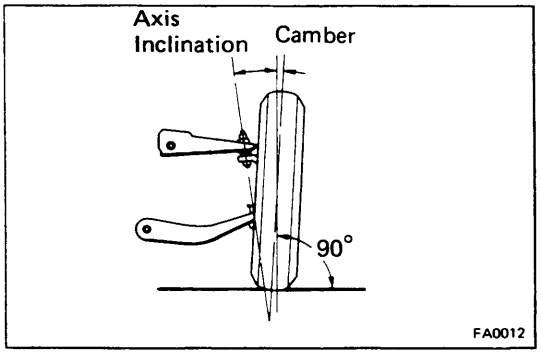

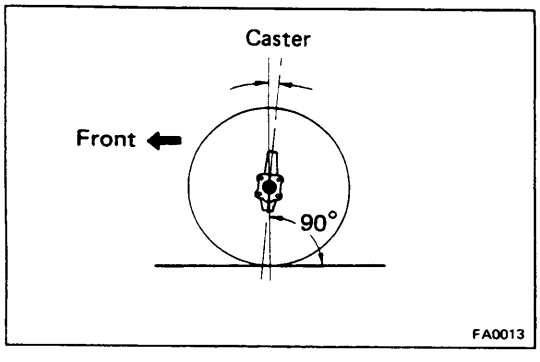

5. ADJUST CAMBER, STEERING AXIS INCLINATION AND CASTER

	Inspection STD	Adjustment STD
Camber Left-right error	0°30′ ± 45′ 30′	0°30′ ± 30′ 30′
Steering axis inclination	10°	
Caster 1/2 ton short	0°40′ ± 45′	0°40′ ± 30′
1/2 ton Long	1°10′ ± 45′	1°10′ ± 30′
1 ton	0°35′ ± 45′	0°35′ ± 30′
C & C	0°05′ ± 45′	0°05′ ± 30′
Left-right error	30′	30′

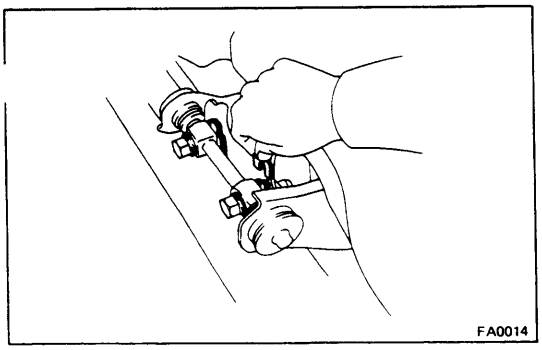
FA0014

If camber caster is not within specification, adjust by adding or removing shims on the upper arm.

Shim thickness mm (in.)

Thickness	
4.0	(0.157)
1.6	(0.063)
1.2	(0.047)

If the steering axis inclination is not as specified after camber and caster have been correctly adjusted, recheck the steering knuckle and front wheel for bending or looseness.

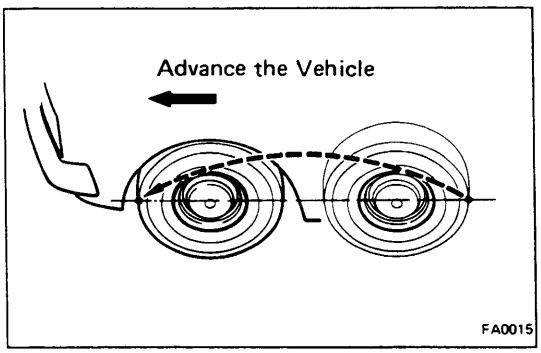

FA0015

6. ADJUST TOE-IN

(a) Make sure the wheels are positioned straight ahead.

(b) Mark the center of each rear tread at spindle height and measure the distance between the marks on the right and left tires.

(c) Advance the vehicle until the marks on the rear side of the tires come to the front.

NOTE: The toe-in should be measured at the same point on the tire and at the same level.

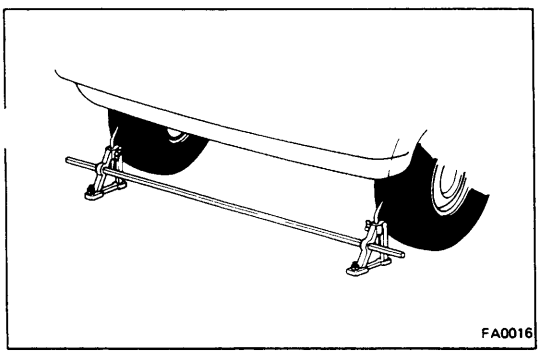
FA0016

(d) Measure the distance between the marks on the front side of the tires.

Toe-in:

mm (in.)

	Tire	Inspection STD	Adjustment STD
1/2 ton Short	Bias	4 ± 4 (0.16 ± 0.16)	4 ± 1 (0.16 ± 0.04)
	Radial	1 ± 4 (0.04 ± 0.16)	1 ± 1 (0.04 ± 0.04)
1/2 ton Long	Bias	6 ± 4 (0.24 ± 0.16)	6 ± 1 (0.12 ± 0.04)
	Radial	3 ± 4 (0.12 ± 0.16)	3 ± 1 (0.12 ± 0.04)
1 ton, C & C	Radial	4 ± 4 (0.16 ± 0.16)	4± 1 (0.16 ± 0.04)

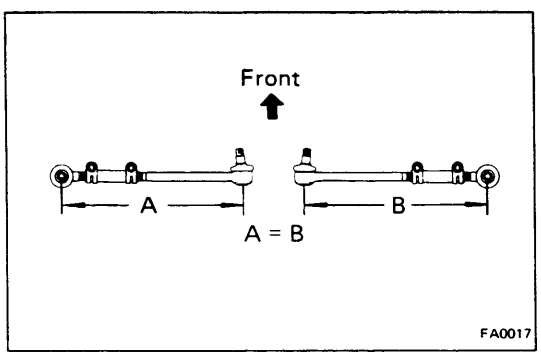

FA0017

(e) Loosen the clamp bolts.

(f) Adjust toe-in by turning the left and right tie rod tubes an equal amount.

NOTE: Make sure that the tie rods are the same length.

Left-right error: Less than 3.0 mm (0.118 in.)

(g) Tighten the clamp bolts and torque them.

Torque: 260 kg-cm (19 ft-lb, 25 N·m)

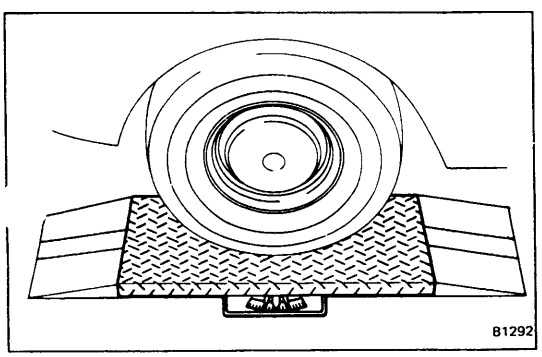
B1292

7. INSPECT SIDE SLIP WITH SIDE SLIP TESTER

Side slip limit:

Less than 3.0 mm/m (0.118 in. /3.3 ft)

If the side slip exceeds the limit, the toe-in or other front wheel alignment may not be correct.

FRONT AXLE HUB AND STEERING KNUCKLE (2WD)

COMPONENTS

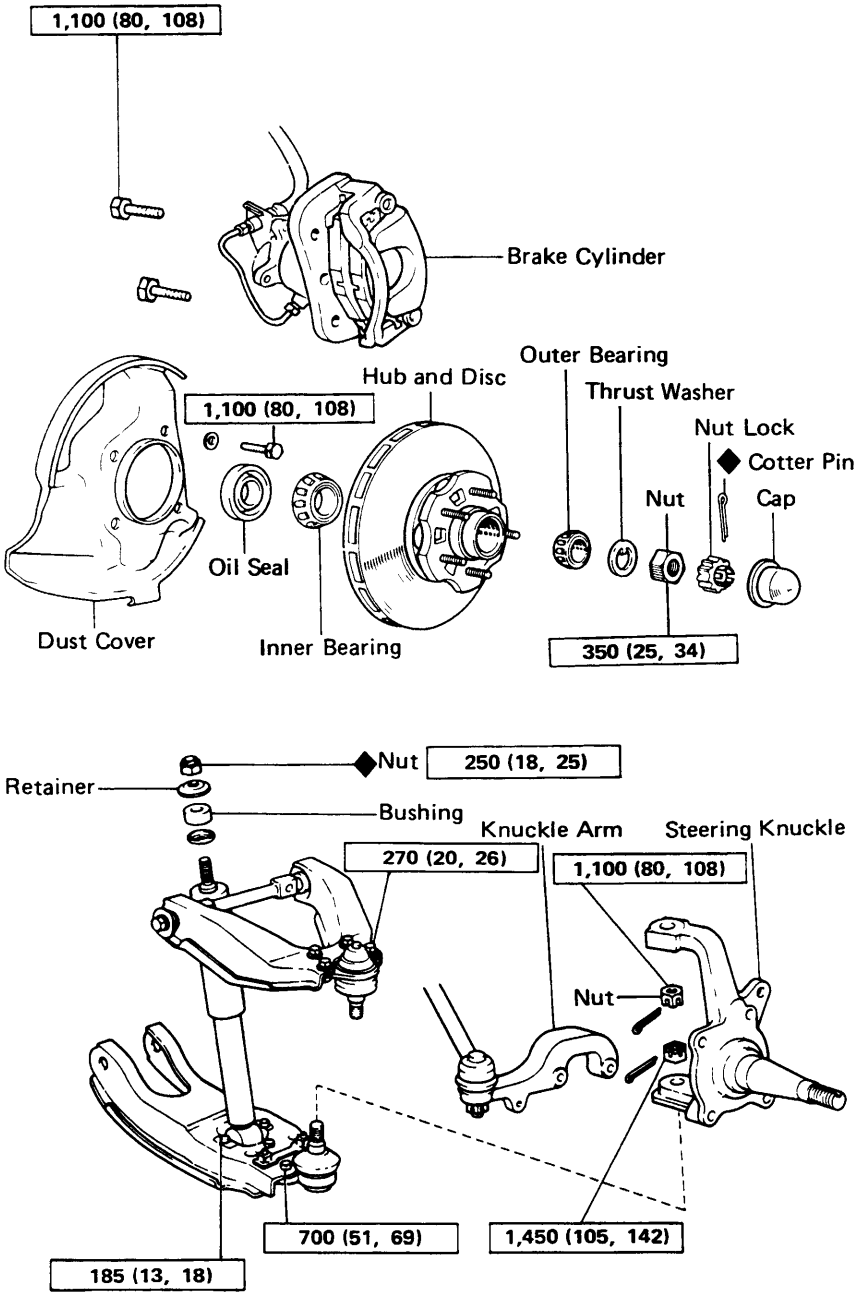

kg-cm (ft-lb, N·m) : Tightening torque

◆ : Non-reusable part

FA0183
FA0212

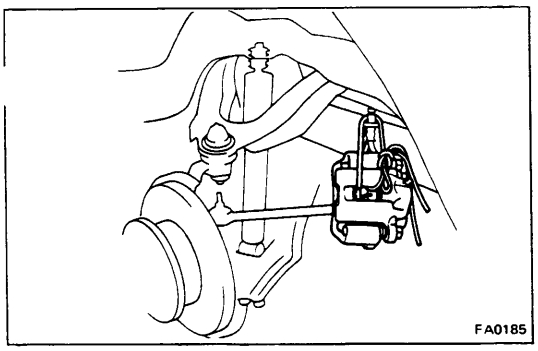

Front Axle Hub

(See page FA-6)

DISASSEMBLY OF FRONT AXLE HUB

1. REMOVE DISC BRAKE CYLINDER AND TORQUE PLATE

(a) Remove the brake cylinder and suspend it with wire.

(b) Remove the torque plate.

NOTE: Do not disconnect the brake tube and hose.

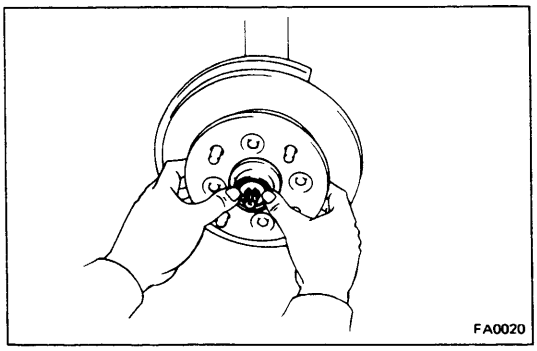

2. REMOVE AXLE HUB WITH DISC

(a) Remove the cap, cotter pin, nut lock and nut.

(b) Remove the hub and disc together with the outer bearing and thrust washer.

NOTE: Be careful not to drop the outer bearing.

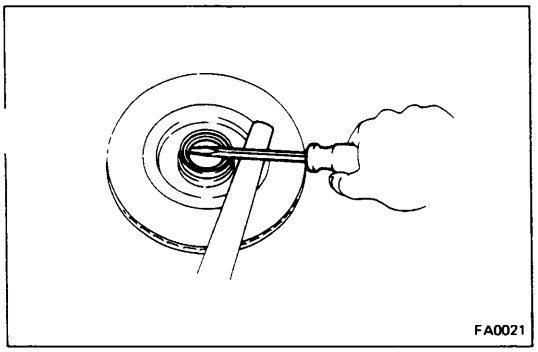

3. REMOVE INNER BEARING AND OIL SEAL

(a) Using a screwdriver, pry out the oil seal.

(b) Remove the inner bearing from the hub.

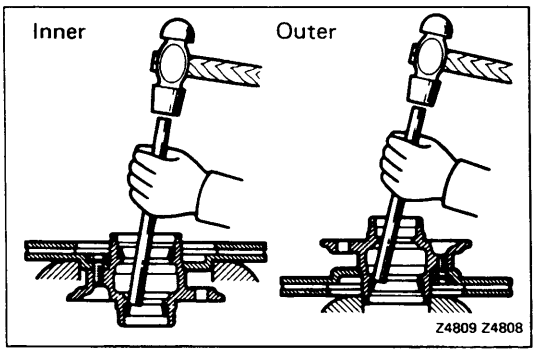

INSPECTION AND REPAIR OF FRONT AXLE HUB

1. INSPECT BEARING

Clean the bearings and outer races and inspect them for wear or damage.

2. REPLACE BEARING OUTER RACE

(a) Using a brass bar and hammer, drive out the bearing outer race.

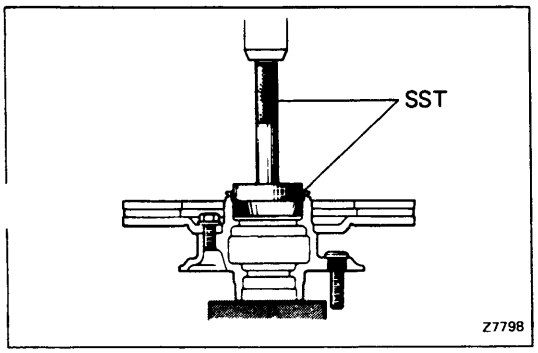

(b) Using SST, carefully drive in a new bearing outer race.

SST 09608-30011

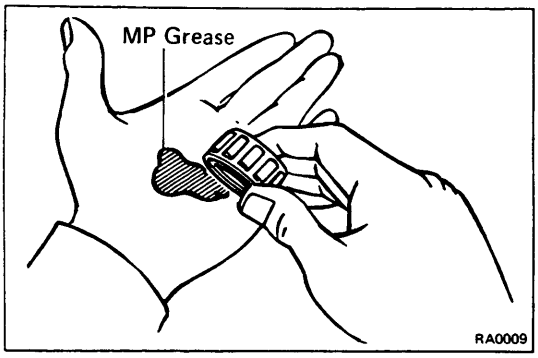

ASSEMBLY OF FRONT AXLE HUB

1. PACK BEARINGS WITH MP GREASE

(a) Place MP grease in the palm of your hand.

(b) Pack grease into the bearing, continuing until the grease oozes out from the other side.

(c) Do the same around the bearing circumference.

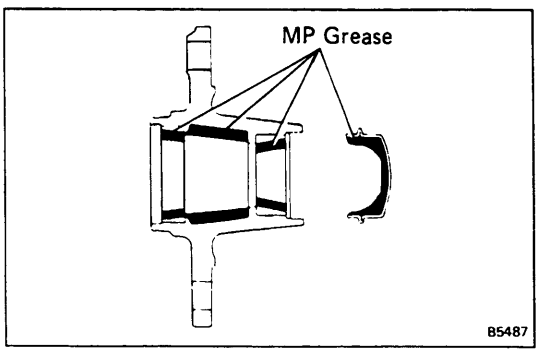

2. COAT INSIDE OF HUB AND CAP WITH MP GREASE

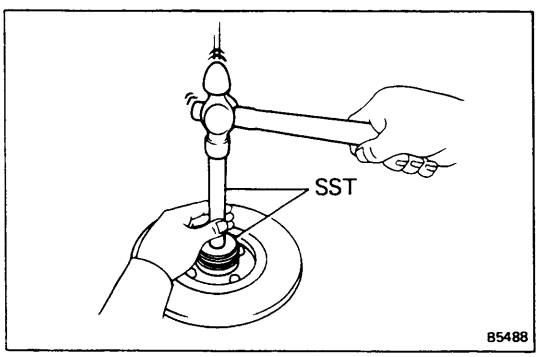

3. INSTALL INNER BEARING AND OIL SEAL

Place inner bearing into the hub. Using SST, drive the oil seal into the hub. Coat the oil seal with MP grease.

SST 09608-30011

4. INSTALL AXLE HUB ON SPINDLE

(a) Place the axle hub on the spindle.

(b) Install the outer bearing and thrust washer.

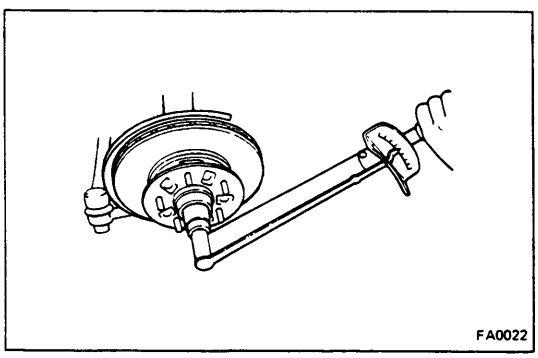

5. ADJUST PRELOAD

(a) Install and torque the nut.

Torque: 350 kg-cm (25 ft-lb, 34 N·m)

(b) Turn the hub right and left two or three times to allow the bearings to settle.

(c) Loosen the nut so there is 0.5 — 1.0 mm (0.020 — 0.039 in.) play in the hub axial direction.

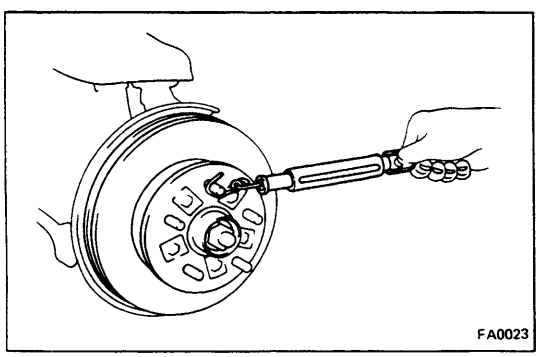

(d) Using a spring tension gauge, measure the frictional force of the oil seal.

(e) Adjust the preload by tightening the nut.

Preload (rotating):

Frictional force plus 0.6 — 1.8 kg
(1.3 — 4.0 lb, 5.9 — 18 N)

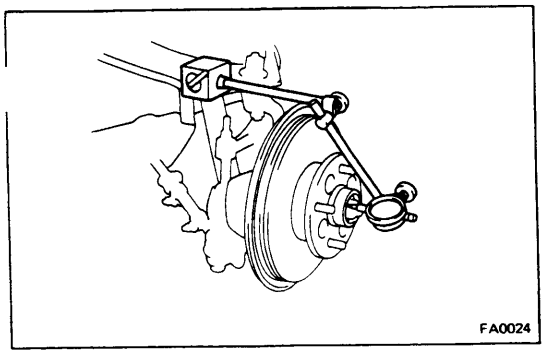

(f) Measure the hub axial play.

Limit: 0.05 mm (0.0020 in.)

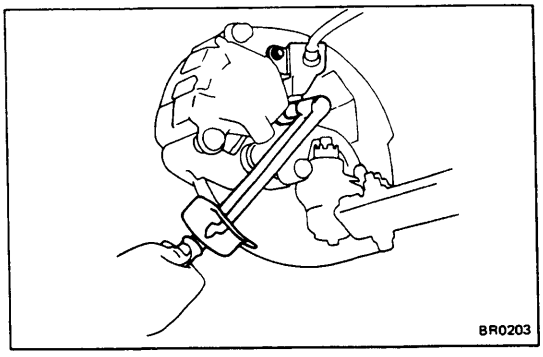

6. **INSTALL LOCK NUT, COTTER PIN AND HUB GREASE CAP**
7. **INSTALL TORQUE PLATE ONTO STEERING KNUCKLE**
   Torque: 1,100 kg-cm (80 ft-lb, 108 N·m)
8. **INSTALL BRAKE CYLINDER ONTO TORQUE PLATE**
   Torque: 900 kg-cm (65 ft-lb, 88 N·m)

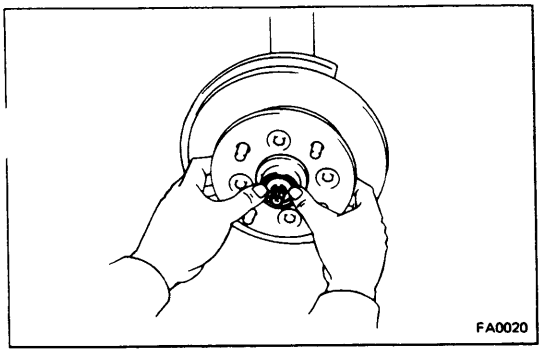

Steering Knuckle

(See page FA-6)

REMOVAL OF STEERING KNUCKLE

1. **REMOVE FRONT AXLE HUB AND BRAKE CALIPER**
   (See page FA-7)
2. **REMOVE DUST COVER**
   (a) Remove the two bolts.
   (b) Remove the two cotter pins and bolts and remove the dust cover.
   (c) Remove the knuckle arm from the steering knuckle.

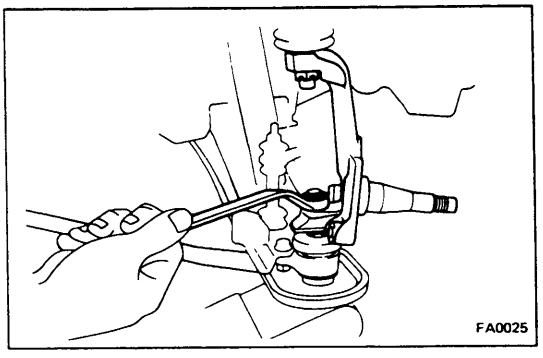

3. **REMOVE STEERING KNUCKLE**
   (a) Support the lower arm with a jack.
   (b) Remove the two cotter pins and two nuts.

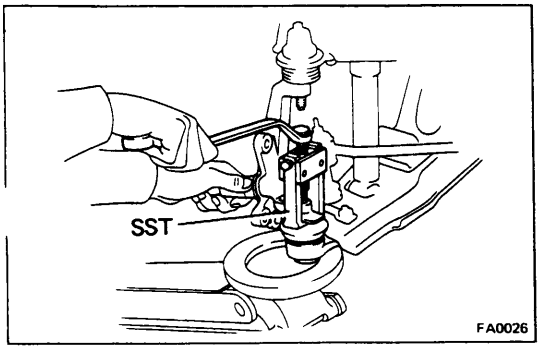

(c) Using SST, disconnect the steering knuckle from the lower ball joint.
(d) Using SST, disconnect the steering knuckle from the upper ball joint.

SST 09628-62011

(e) Remove the steering knuckle.

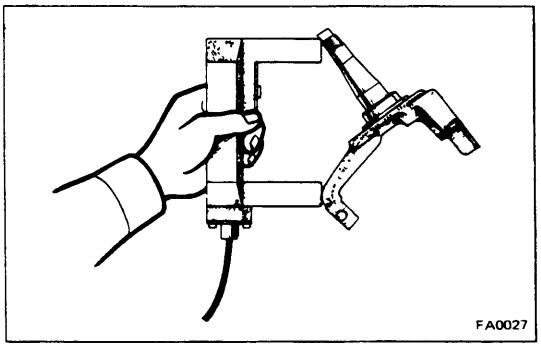

INSPECTION OF STEERING KNUCKLE

INSPECT STEERING KNUCKLE

Inspect the knuckle for damage or cracks.

NOTE: It is recommended that a flaw detector or liquid penetrate be used for this inspection.
If the steering knuckle is damaged or cracked, replace it.

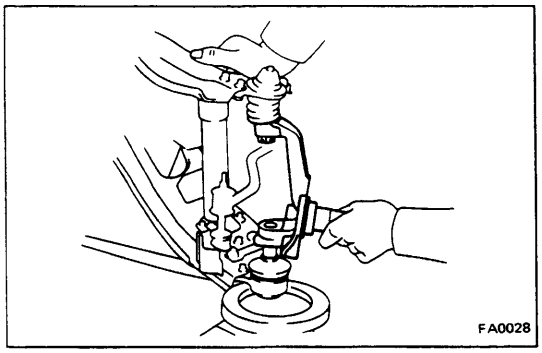

INSTALLATION OF STEERING KNUCKLE

1. INSTALL STEERING KNUCKLE

(a) Support the lower arm with a jack.

(b) Install the steering knuckle to the upper ball joint and install the nut.

(c) Push the upper arm and steering knuckle down and install the steering knuckle to the lower ball joint and install the nut.

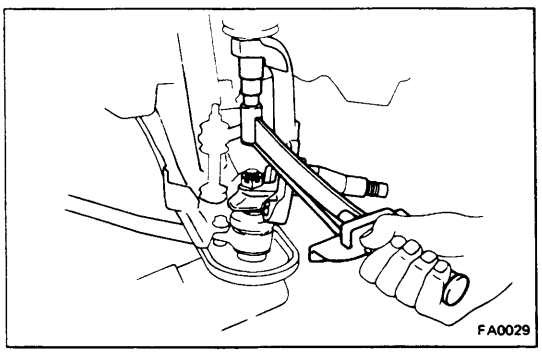

(d) Torque the upper ball joint nut.

Torque: 1,100 kg-cm (80 ft-lb, 108 N·m)

(e) Torque the lower ball joint nut.

Torque: 1,450 kg-cm (105 ft-lb, 142 N·m)

(f) Install the cotter pins.

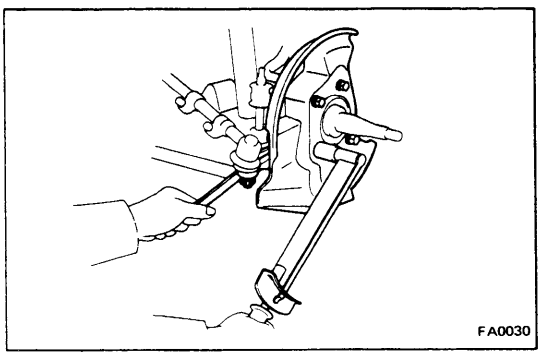

2. INSTALL KNUCKLE ARM AND DUST COVER

(a) Install the knuckle arm and the dust cover.

(b) Torque the bolts.

Torque: 1,100 kg-cm (80 ft-lb, 108 N·m)

(c) Secure the nuts with the cotter pins.

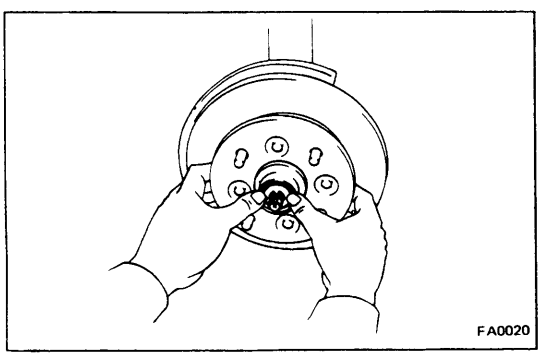

3. INSTALL FRONT AXLE HUB AND BRAKE CALIPER

(See pages FA-8, 9)

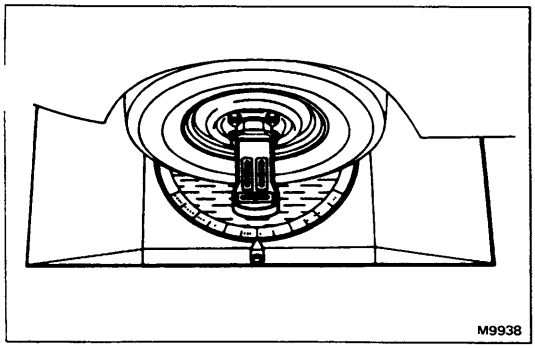

4. **CHECK FRONT WHEEL ALIGNMENT**
(See page FA-3)

FRONT SUSPENSION (2WD)

COMPONENTS

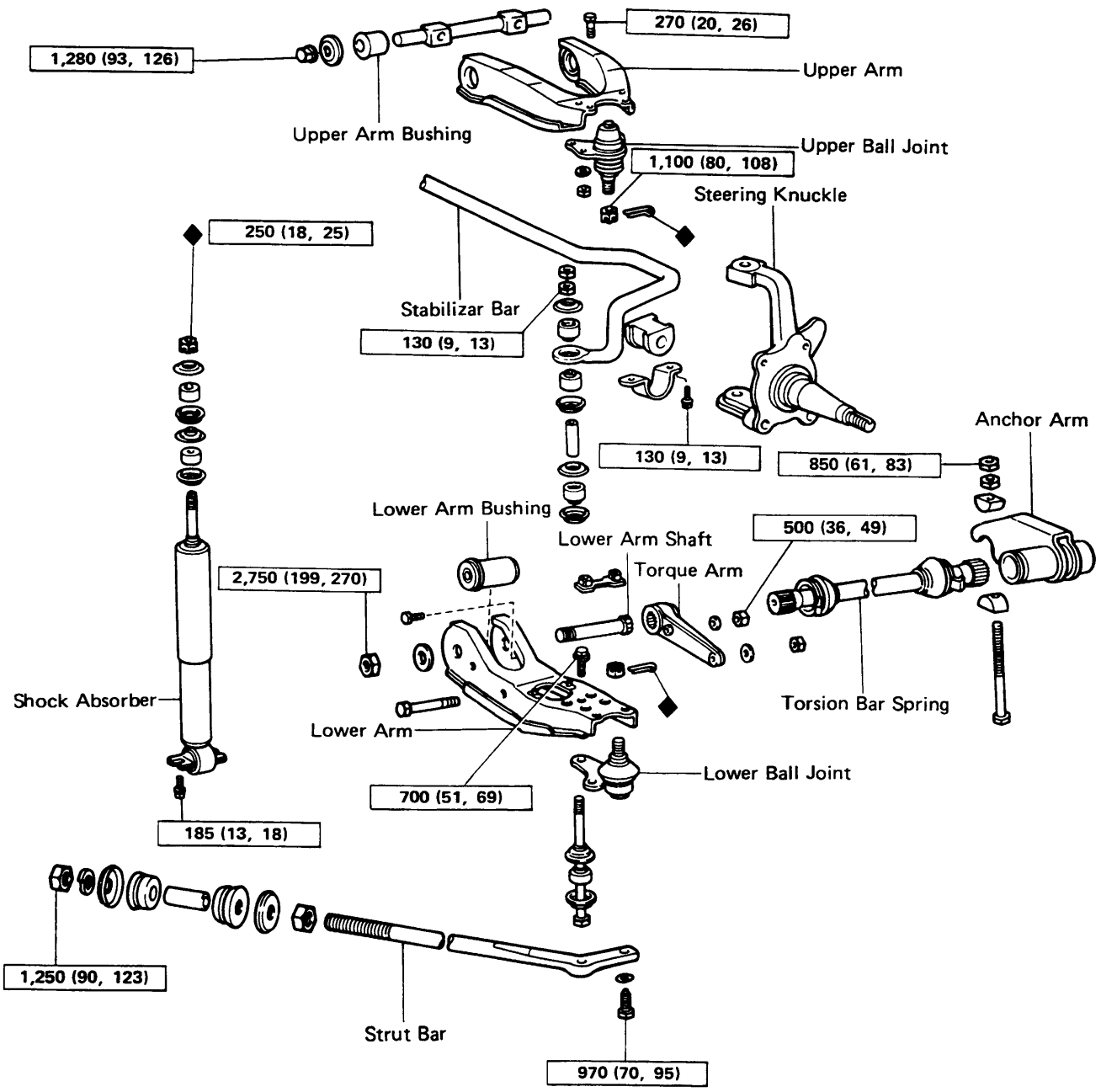

kg-cm (ft-lb, N·m) : Tightening torque

◆ : Non-reusable part

FA0230

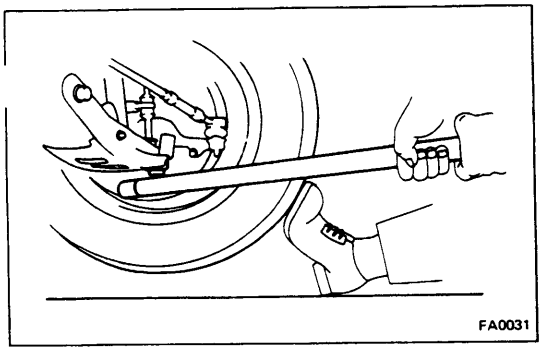

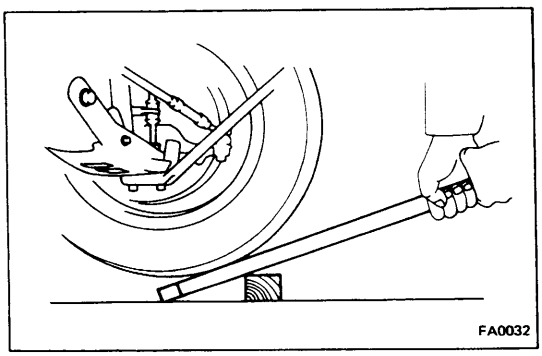

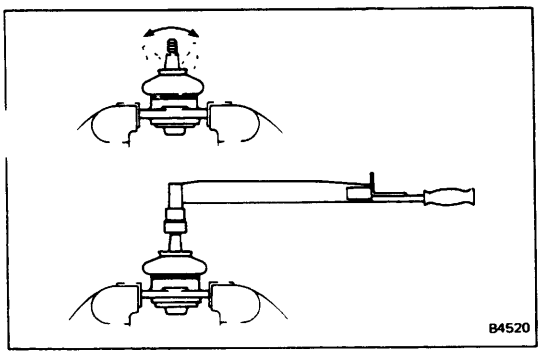

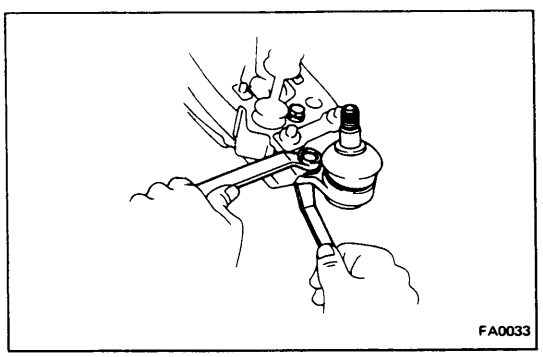

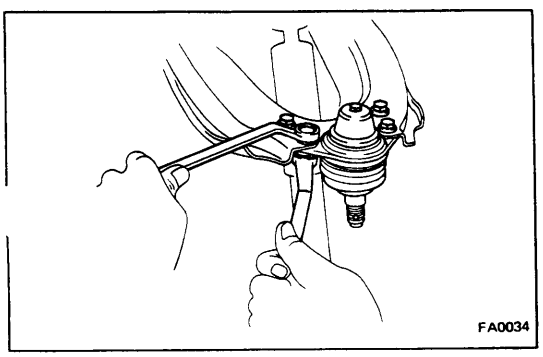

Ball Joints

INSPECTION OF BALL JOINTS

1. **INSPECT LOWER BALL JOINT FOR EXCESSIVE LOOSENESS**
   (a) Jack up the front of the vehicle and support it with stands.
   (b) Make sure the front wheels are in a straight forward position, and depress the brake pedal.
   (c) Move the lower arm up and down and check that the lower ball joint has no excessive play.

   Maximum vertical play: 2.3 mm (0.091 in.)

2. **INSPECT UPPER BALL JOINT FOR EXCESSIVE LOOSENESS**
   Move the wheel up and down and check that the upper ball joint has no excessive play.

   Maximum vertical play: 2.3 mm (0.091 in.)

3. **INSPECT BALL JOINT ROTATION CONDITION**
   (a) Remove the ball joint. (See pages FA-9,10)
   (b) As shown in the figure, flip the ball joint stud back and forth 5 times before installing the nut.
   (c) Using a torque gauge, turn the nut continuously one turn each 2-4 seconds and take the torque reading on the 5th turn.

   Torque (turning):
   Lower ball joint 25-50 kg-cm (22-43 in.-lb, 2.5-4.9 N·m)
   Upper ball joint 20-40 kg-cm (18-34 in.-lb, 2.0-3.9 N·m)

REMOVAL OF BALL JOINTS

1. **REMOVE STEERING KNUCKLE**
   (See page FA-9)

2. **REMOVE LOWER BALL JOINT FROM LOWER ARM**

3. **REMOVE UPPER BALL JOINT FROM UPPER ARM**

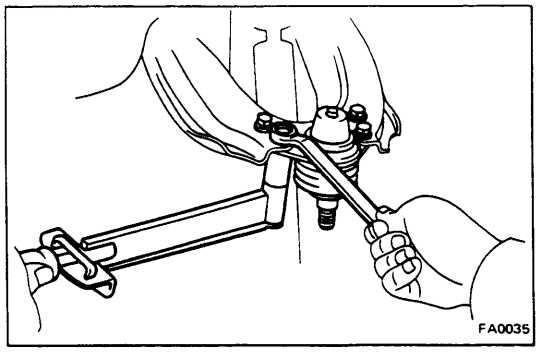

INSTALLATION OF BALL JOINTS

1. **INSTALL UPPER BALL JOINT TO UPPER ARM**
   Torque: 270 kg-cm (20 ft-lb, 26 N·m)

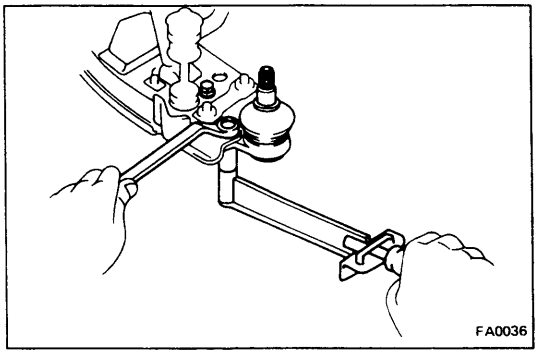

2. **INSTALL LOWER BALL JOINT TO LOWER ARM**
   Torque: 700 kg-cm (51 ft-lb, 69 N·m)

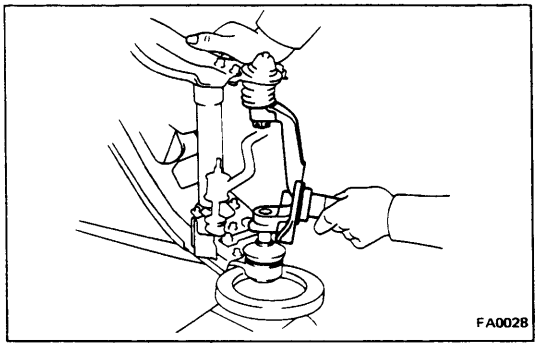

3. **INSTALL STEERING KNUCKLE**
   (See page FA-10)

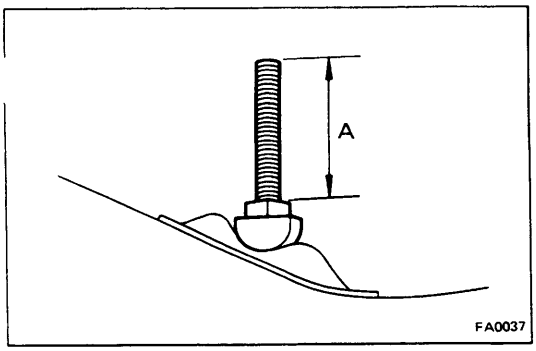

Torsion Bar Spring

(See page FA-12)

REMOVAL OF TORSION BAR SPRING

1. **JACK UP AND SUPPORT FRAME ON STANDS**
2. **REMOVE LOCK NUT AND MEASURE PROTRUDING BOLT END "A", AS SHOWN**

   NOTE: Use this measurement for reference when adjusting the vehicle height.
3. **REMOVE DUST COVER**
4. **LOOSEN ADJUSTING NUT UNTIL NO TENSION ON TORSION BAR**

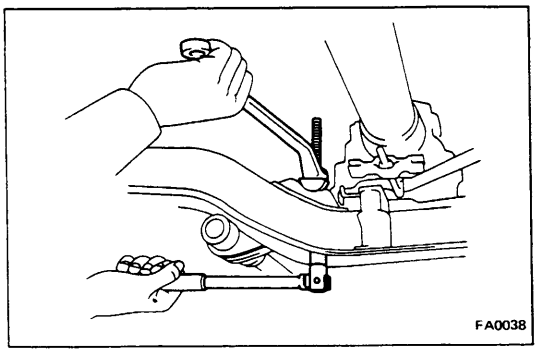

5. **REMOVE TORQUE ARM, TORSION BAR SPRING AND ANCHOR ARM**
   (a) Remove the torque arm mounting nuts.
   (b) Remove the anchor arm from the adjusting bolt and then remove the torsion bar together with the torque arm and anchor arm.

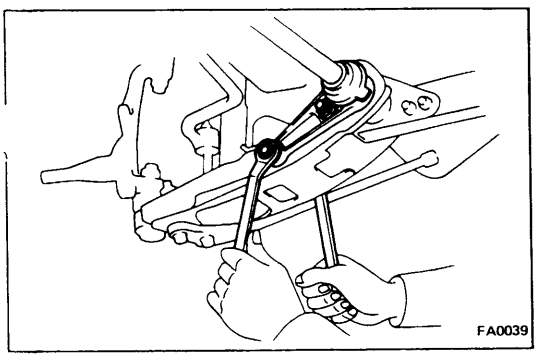

INSTALLATION OF TORSION BAR SPRING

NOTE: There are left and right identification marks on the rear end of the torsion bar springs.
Be careful not to interchange them.

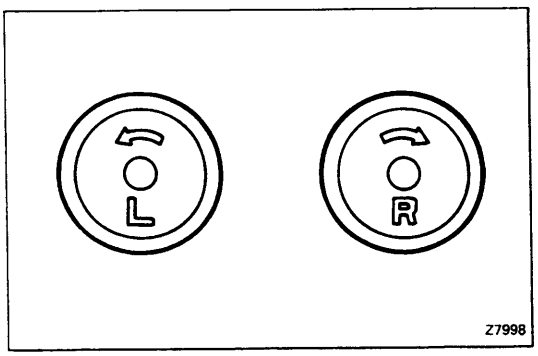

1. **INSTALL TORSION BAR SPRING AND ANCHOR ARM AND TORQUE ARM**
   (a) Apply a light coat of MP grease to the spline of the torsion bar spring.
   (b) Align the toothless portion and install the anchor arm to the torsion bar spring.
   (c) Align the toothless portion and install the torque arm to the torsion bar spring.

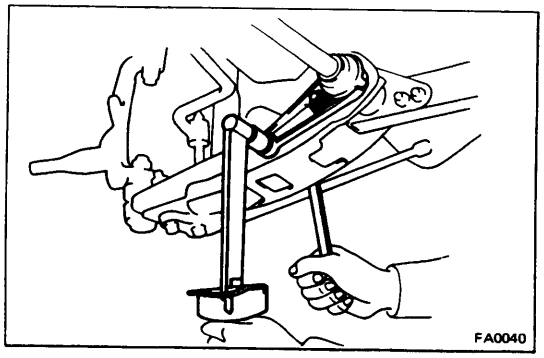

(d) Install the torsion bar spring torque arm side and install the anchor arm to the adjusting bolt.

(e) Torque the torque arm nut.

Torque: 500 kg-cm (36 ft-lb, 49 N·m)

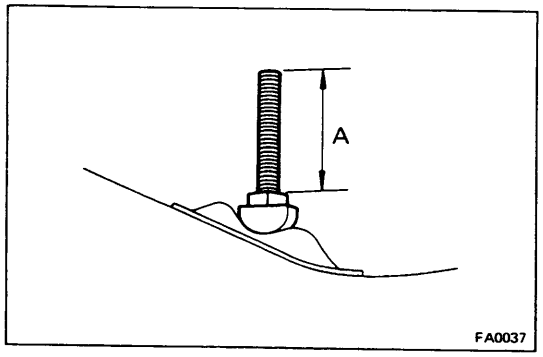

(f) Tighten the adjusting nut so that the bolt protrusion is equal to that before removal.

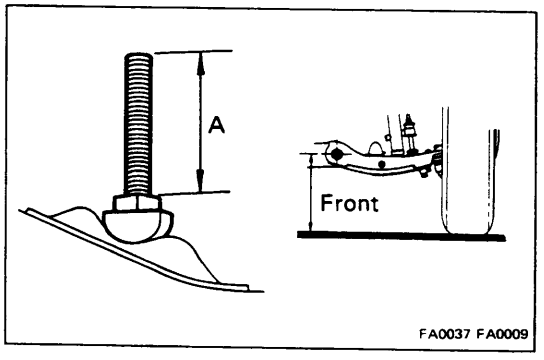

(g) Install the wheel and remove the stands. Bounce the vehicle to settle the suspension.

(h) Adjust the vehicle height by turning the adjusting nut.

Vehicle hight: See page A-21

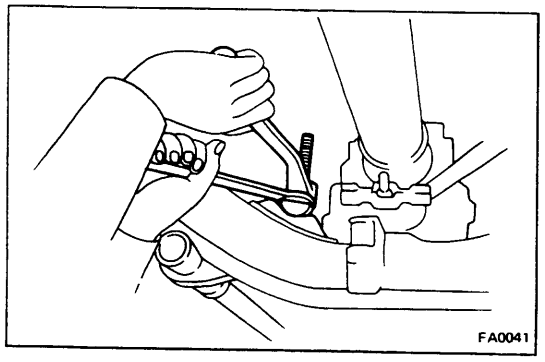

2. TORQUE LOCK NUT

Torque: 850 kg-cm (61 ft-lb, 83 N·m)

3. INSTALL DUST COVER

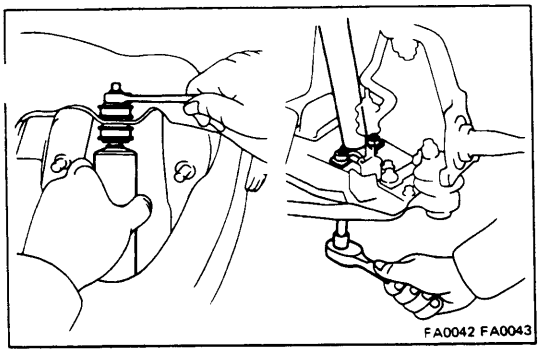

Lower Suspension Arm and Shock Absorber (See page FA-12)

1. **REMOVE TORSION BAR SPRING** **(See page FA-15)**

2. **REMOVE SHOCK ABSORBER**

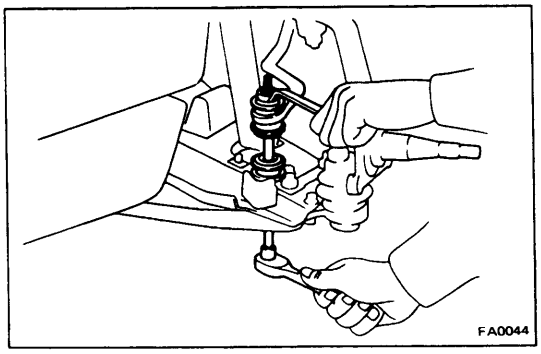

3. **DISCONNECT STABILIZER BAR FROM LOWER ARM**

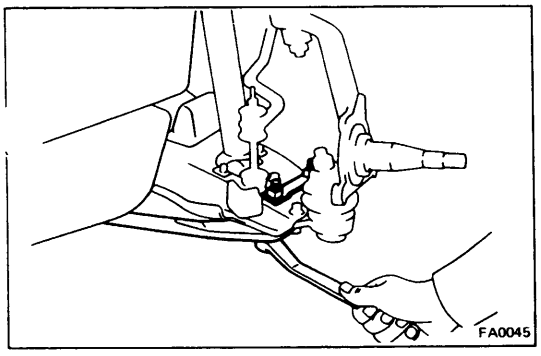

4. **DISCONNECT STRUT BAR FROM LOWER ARM**

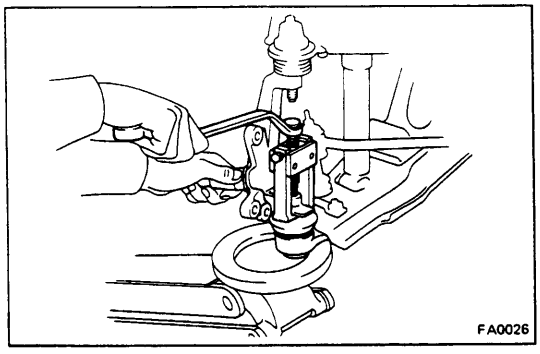

5. **REMOVE LOWER BALL JOINT**
   (a) Remove the cotter pin and nut.
   (b) Using SST, disconnect the ball joint from the steering knuckle and remove it.

   SST 09628-62011

   NOTE: Be careful not to damage the ball joint boot.

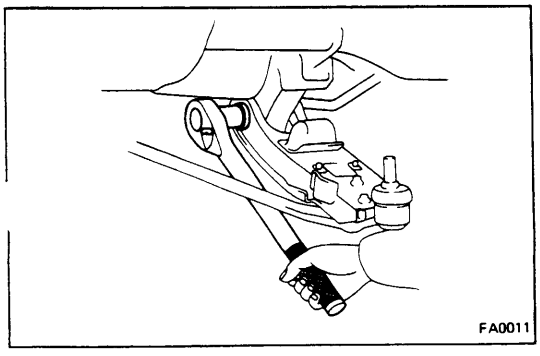

6. **REMOVE LOWER SUSPENSION ARM**
   (a) Remove the lower arm shaft nut and remove the lower arm.

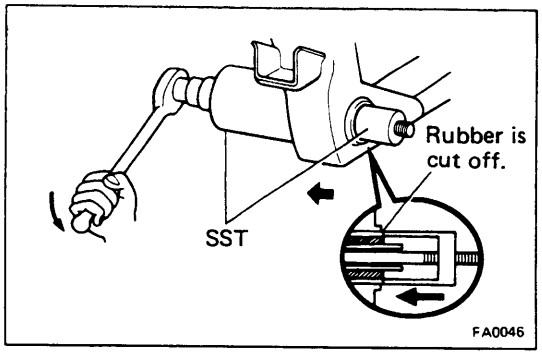

REPLACEMENT OF LOWER ARM BUSHING

1. REMOVE BUSHING

(a) Cut off the bushing rubber as shown in the figure.

(b) Using SST, remove the bushing

SST 09726-35010

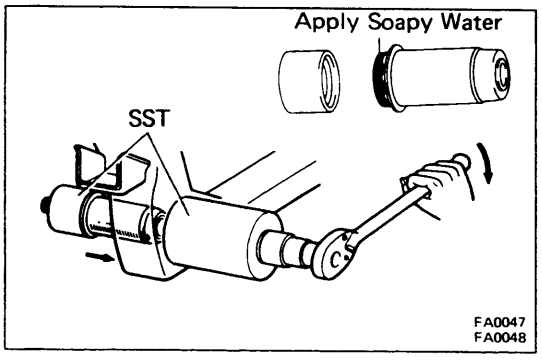

(c) Apply soapy water on the front rubber part of the bushing and fit SST on the new bushing.

(d) Using SST, install the new bushing

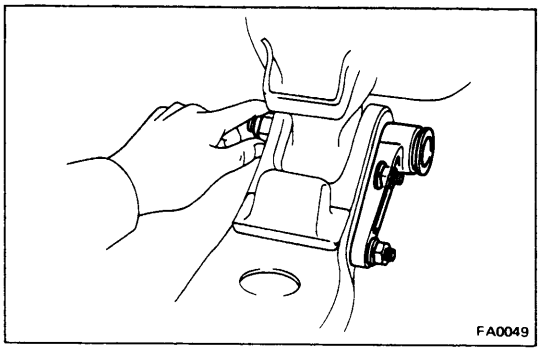

INSTALLATION OF LOWER SUSPENSION ARM AND SHOCK ABSORBER

1. INSTALL LOWER SUSPENSION ARM

(a) Install the torque arm mounting bolts to the lower arm.

(b) Place the torque arm on the lower arm shaft. Set the lower arm in installation position, and insert the lower arm shaft and torque arm.

(c) Temporarily install the torque arm.

(d) Finger tighten the lower arm, and remove the torque arm.

NOTE: Do not torque the nut.

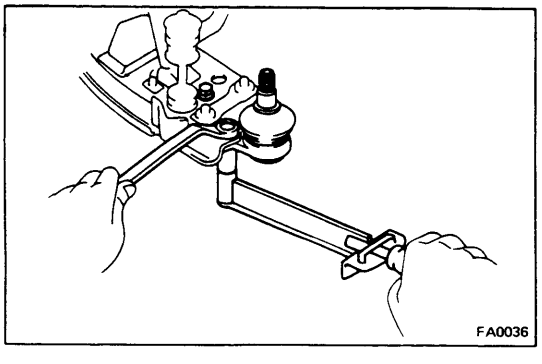

2. INSTALL LOWER BALL JOINT

Install the lower ball joint to the lower arm.

Torque: 700 kg-cm (51 ft-lb, 69 N·m)

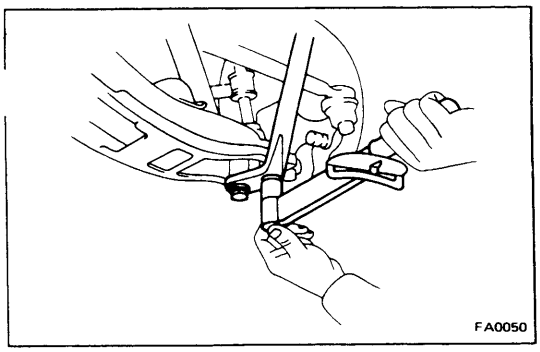

3. **CONNECT STRUT BAR TO LOWER ARM**
   Torque: 970 kg-cm (70 ft-lb, 95 N·m)

4. **CONNECT STABILIZER BAR TO LOWER ARM**
   Torque: 130 kg-cm (9 ft-lb, 13 N·m)

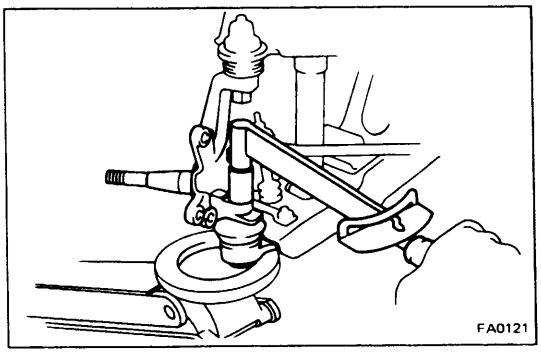

5. **CONNECT BALL JOINT TO STEERING KNUCKLE**
   (a) Support the lower arm with a jack.
   (b) Install the ball joint to the steering knuckle.
   (c) Torque the nut.
   Torque: 1,450 kg-cm (105 ft-lb, 142 N·m)
   (d) Secure the nut with cotter pin.

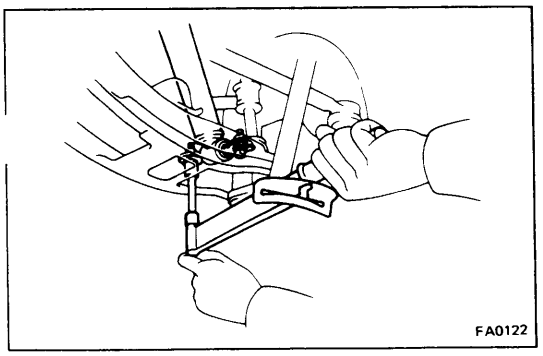

6. **INSTALL SHOCK ABSORBER**
   (a) Install the shock absorber to the lower arm.
   Torque: 185 kg-cm (13 ft-lb, 18 N·m)
   (b) Install the shock absorber to the upper bracket.
   Torque: 250 kg-cm (18 ft-lb, 25 N·m)

7. **INSTALL KNUCKLE ARM, DUST COVER, AXLE HUB AND BRAKE CALIPER**
   (See page FA-10)

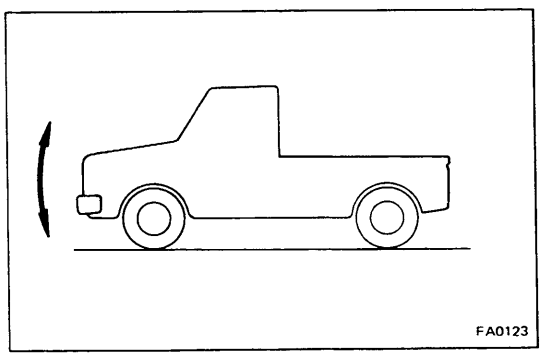

8. **INSTALL TORSION BAR SPRING**
   (See page FA-15)

9. **TORQUE LOWER ARM SHAFT NUT**
   (a) Remove the stands and bounce the vehicle to stabilize the suspension.

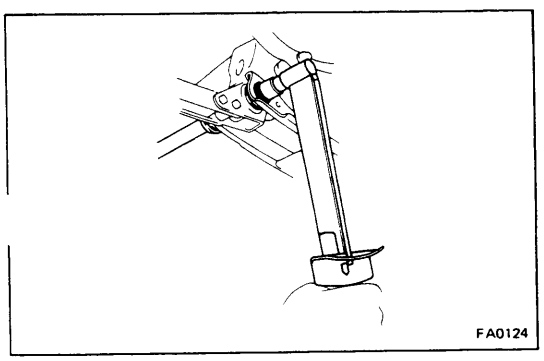

   (b) Torque the nut.
   Torque: 2,750 kg-cm (199 ft-lb, 270 N·m)

10. **CHECK FRONT WHEEL ALIGNMENT**
    (See page FA-3)

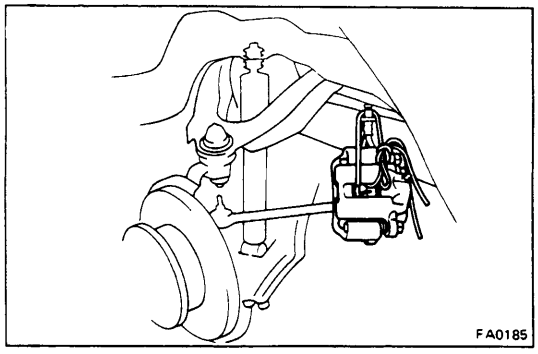

Upper Suspension Arm

(See page FA-12)

REMOVAL OF UPPER SUSPENSION ARM

1. **REMOVE DISC BRAKE CYLINDER**
(See Page FA-7)

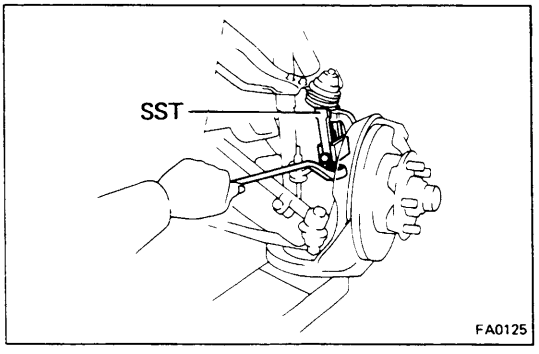

2. **DISCONNECT UPPER BALL JOINT FROM STEERING KNUCKLE**
   (a) Support the lower arm with a jack.
   (b) Using SST, disconnect the ball joint from the steering knuckle.
   SST 09628-62011
   NOTE: Be careful not to damage the ball joint boot.

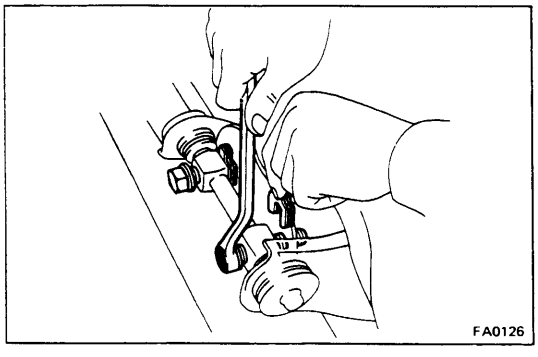

3. **REMOVE UPPER SUSPENSION ARM**
   (a) Remove the bolts and camber adjusting shims.
   (b) Remove the upper arm.
   NOTE: Do not loose the camber adjusting shims. Recc the position, and the thickness of camber adjusting shims so that these can be reinstalled to their original location.

REPLACEMENT OF UPPER ARM BUSHING

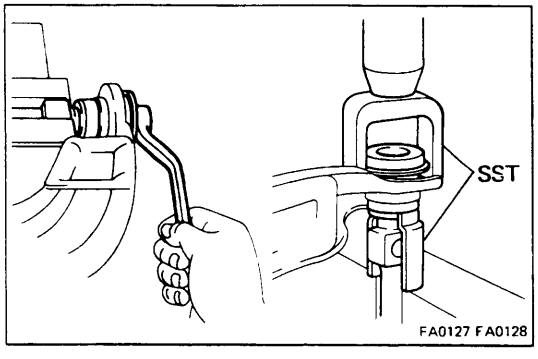

1. **REMOVE BUSHING**
   (a) Remove the bolts and washers.
   (b) Using SST, push out the bushings.
   SST 09710-30020

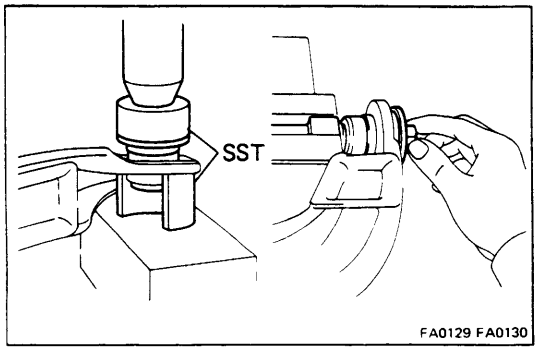

2. **INSTALL BUSHING**
   (a) Using SST, push in the bushings.
   SST 09710-30020
   (b) Install the washers, and finger tighten the bolts.
   NOTE: Do not torque the bolts.

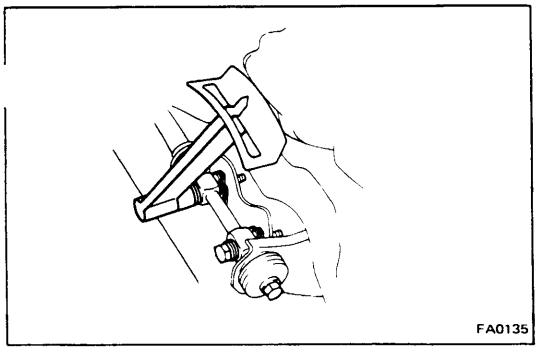
FA0135

INSTALLATION OF UPPER SUSPENSION ARM

1. **INSTALL UPPER ARM**
   (a) Install the upper arm together with the camber adjusting shims.
   (b) Torque the bolts.
   Torque: 1,000 kg-cm (72 ft-lb, 98 N·m)
   NOTE: Install an equal number and thickness of shims in their original position.

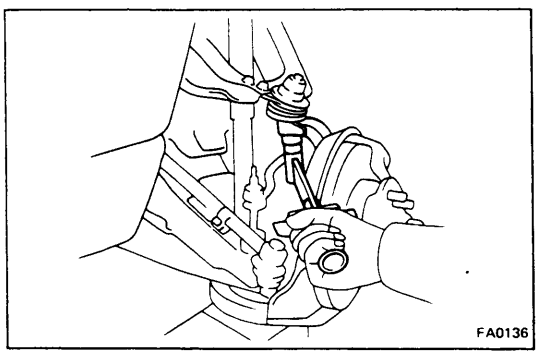
FA0136

2. **INSTALL UPPER BALL JOINT**
   (a) Install the upper ball joint to the upper arm.
   Torque: 270 kg-cm (20 ft-lb, 26 N·m)
   (b) Support the lower arm with a jack and connect the upper ball joint to the steering knuckle.
   Torque: 1,100 kg-cm (80 ft-lb, 108 N·m)
   (c) Secure the nut with a new cotter pin.

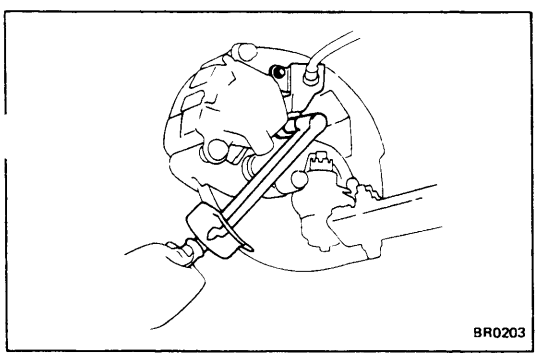
BR0203

3. **CONNECT DISC BRAKE CYLINDER**
   Torque: 900 kg-cm (65 ft-lb, 88 N·m)

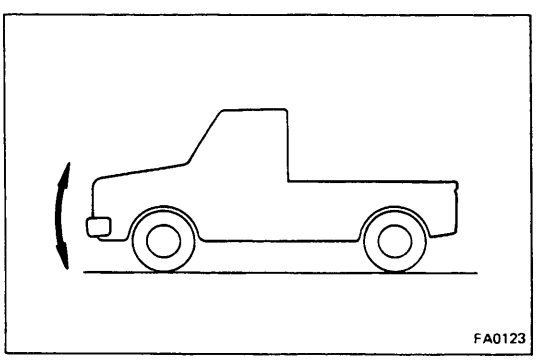
FA0123

4. **TORQUE UPPER ARM SHAFT BOLTS**
   (a) Remove the stands and bounce the vehicle to stabilize the suspension.
   (b) Torque the upper arm shaft bolts.
   Torque: 1,280 kg-cm (93 ft-lb, 126 N·m)

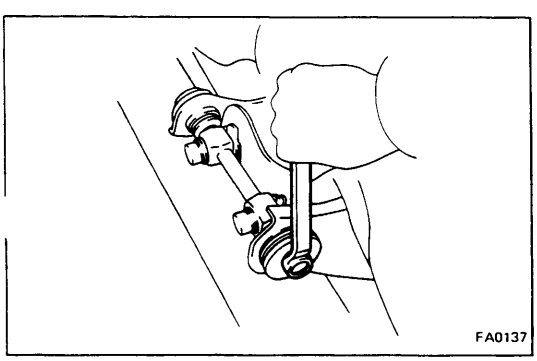
FA0137

5. **CHECK FRONT WHEEL ALIGNMENT**
   (See page FA-3)

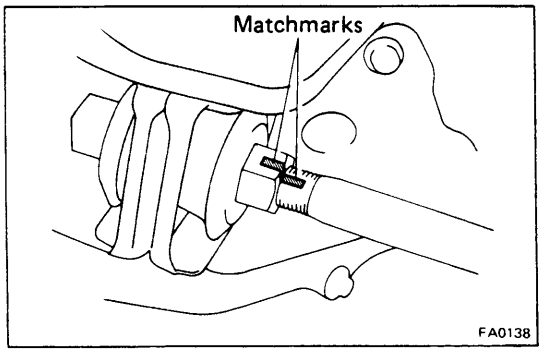

Strut Bar

(See page FA-12)

REMOVAL OF STRUT BAR

1. PLACE MATCHMARKS ON STRUT BAR

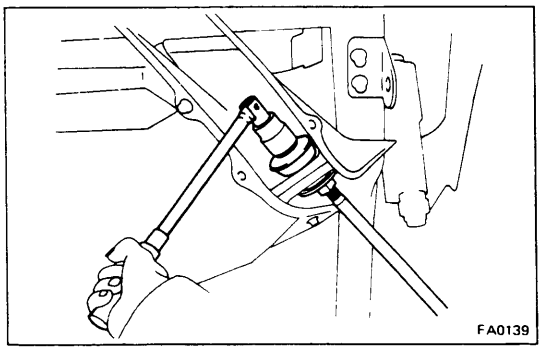

2. REMOVE FRONT NUT FROM STRUT BAR

3. REMOVE STRUT BAR FROM LOWER ARM

Remove the nuts holding the strut bar to the lower arm, and remove the strut bar.

INSTALLATION OF STRUT BAR

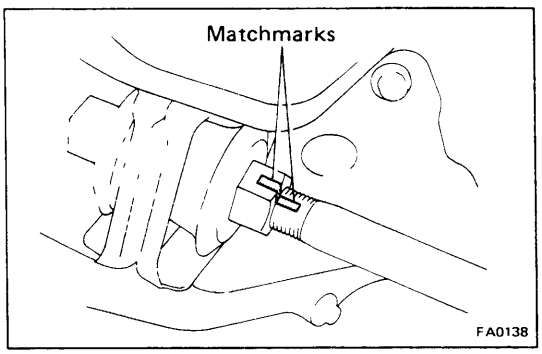

1. INSTALL FRONT NUT

Install the front nut and align the matchmarks on the str bar.

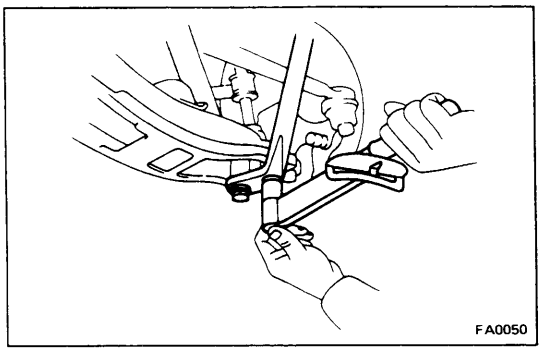

2. INSTALL STRUT BAR TO BRACKET

(a) Install the washer and bushing to the strut bar and install it to the bracket.

(b) Install the collar, bushing and washer to the strut bar.

(c) Finger tighten the front nut.

3. CONNECT STRUT BAR TO LOWER ARM

Torque: 970 kg-cm (70 ft-lb, 95 N·m)

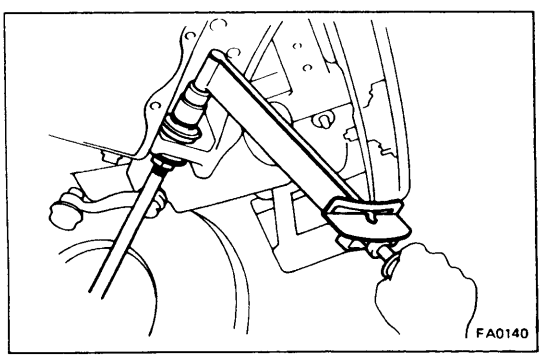

4. TORQUE FRONT NUT

(a) Remove the stands and the vehicle to stabilize the suspension.

(b) Torque the front nut.

Torque: 1,250 kg-cm (90 ft-lb, 123 N·m)

5. CHECK FRONT WHEEL ALIGNMENT

(See page FA-3)

Stabilizer Bar

(See page FA-12)

REMOVAL OF STABILIZER BAR

1. **REMOVE ONE TORSION BAR SPRING**
(See page FA-15)

2. **REMOVE STABILIZER BAR FROM LOWER ARMS**

(a) Remove the nuts and cushions holding both sides of the stabilizer bar from the lower arms, and disconnect the stabilizer bar.

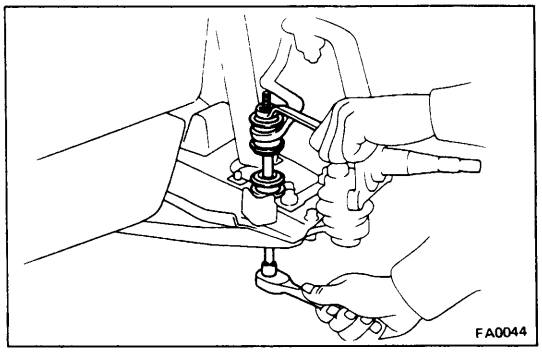

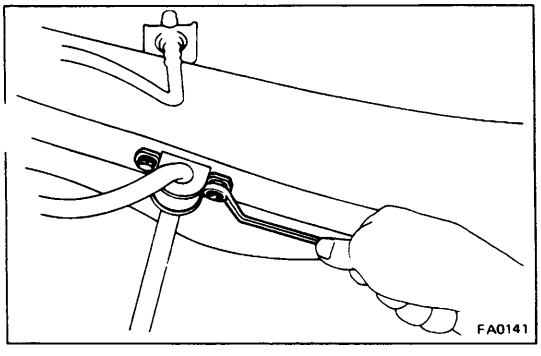

(b) Remove both stabilizer bar bushings and brackets, and remove the stabilizer bar.

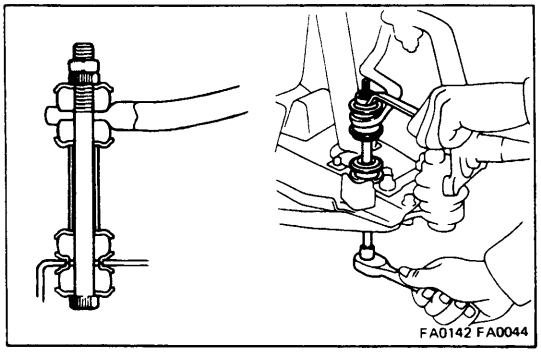

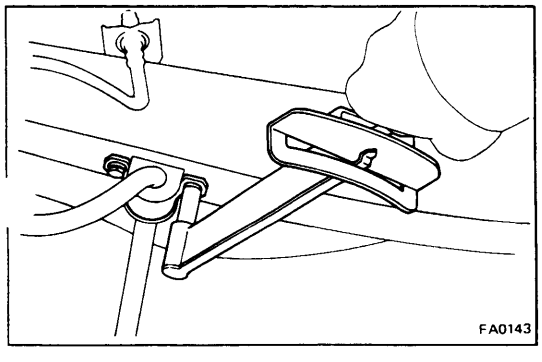

INSTALLATION OF STABILIZER BAR

1. **PLACE STABILIZER BAR TO FRAME**

Place the stabilizer bar in position and install both stabilizer bar bushings and brackets to the frame.
Finger tighten the bolts.

2. **CONNECT STABILIZER BAR TO LOWER ARMS**

Connect the stabilizer bar on both sides to the lower arms with bolts, cushions and new nuts as shown. Torque the nuts.

Torque: 130 kg-cm (9 ft-lb, 13 N·m)

3. **TORQUE BRACKET SET BOLTS**

Torque: 130 kg-cm (9 ft-lb, 13 N·m)

4. **INSTALL TORSION BAR SPRING**
(See page FA-15)

TROUBLESHOOTING (4WD)

Problem	Possible cause	Remedy	Page
Oil leak at front axle	Oil seals damaged or worn	Replace oil seal	FA-49
	Front axle housing cracked	Repair as necessary	
Oil leak at pinion shaft	Oil level too high or wrong grade	Drain and replace oil	A-34
	Oil seal worn or damaged	Replace oil seal	RA-6
	Companion flange loose or damaged	Tighten or replace flange	RA-9
Noises in front axle	Oil level low or wrong grade	Drain and replace oil	A-34
	Excessive backlash between pinion and ring or side gear	Check backlash	RA-8
	Ring, pinion or side gears worn or chipped	Inspect gears	RA-10
	Pinion shaft bearing worn	Replace bearing	RA-10
	Wheel bearing worn	Replace bearing	FA-45
	Differential bearing loose or worn	Tighten or replace bearings	RA-10
Wanders/pulls	Tires worn or improperly inflated	Replace tire or inflate tires to proper pressure	FA-25
	Alignment incorrect	Check front end alignment	FA-25
	Wheel bearing adjusted too tight	Adjust wheel bearing	FA-46
	Front or rear suspension parts loose or broken	Tighten or replace suspension part	FA-60
	Steering linkage loosen or worn	Tighten or replace steering linkage	SR-75
	Steering gear out of adjustment or broken	Adjust or repair steering gear	SR-3
Bottoming	Vehicle overloaded	Check loading	
	Shock absorber worn out	Replace shock absorber	FA-60
	Springs weak	Replace spring	FA-61
Sways/pitches	Tires improperly inflated	Inflate tires to proper pressure	FA-25
	Stabilizer bar bent or broken	Inspect stabilizer bar	FA-65
	Shock absorber worn out	Replace shock absorber	FA-60
Front wheel shimmy	Tires worn or improperly inflated	Replace tire or inflate tires to proper pressure	FA-25
	Wheels out of balance	Balance wheels	
	Steering damper worn out	Replace steering damper	SR-77
	Shock absorber worn out	Replace shock absorber	FA-60
	Alignment incorrect	Check front end alignment	FA-25
	Wheel bearings worn or improperly adjusted	Replace or adjust wheel bearings	FA-45
	Steering knuckle bearing worn	Replace bearing	FA-45
	Steering linkage loosen or worn	Tighten or replace steering linkage	SR-75
	Steering gear out of adjustment or broken	Adjust or repair steering gear	SR-3
Abnormal tire wear	Tires improperly inflated	Inflate tire to proper pressure	FA-25
	Shock absorbers worn out	Replace shock absorber	FA-60
	Alignment incorrect	Check toe-in	FA-26

FRONT WHEEL ALIGNMENT (4WD)

1. MAKE FOLLOWING CHECKS AND CORRECT ANY PROBLEMS

(a) Check the tires for wear and proper inflation.

Correct tire pressure:

kg/cm² (psi, kPa)

Tire size	Front	Rear
P225 / 75R15	1.8 (26,177)	2.0 (28,196)

(b) Check the wheel runout.

Lateral runout: Less than 1.2 mm (0.047 in.)

(c) Check the front wheel bearings for looseness.

(d) Check the front suspension for looseness.

(e) Check the steering linkage for looseness.

(f) Use the standard bounce test to check that the front absorbers work properly.

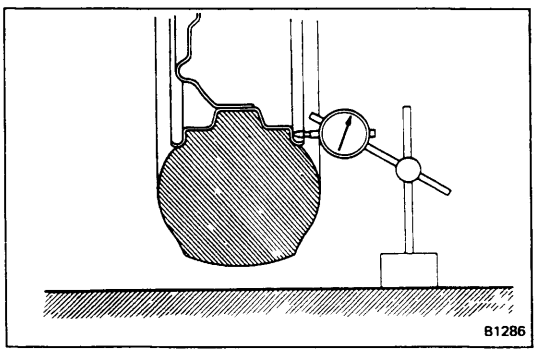

2. INSTALL WHEEL ALIGNMENT EQUIPMENT

Follow the specific instructions of the equipment manufacturer.

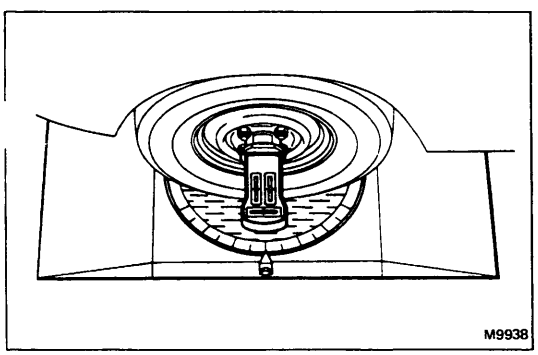

3. CHECK CAMBER AND KING PIN INCLINATION

Camber: 1° ± 45'
King pin inclination: 9°30' ± 45'

If camber or king pin inclination checks are not within specification, rechecks the steering knuckle parts and the front wheel for bending or looseness.

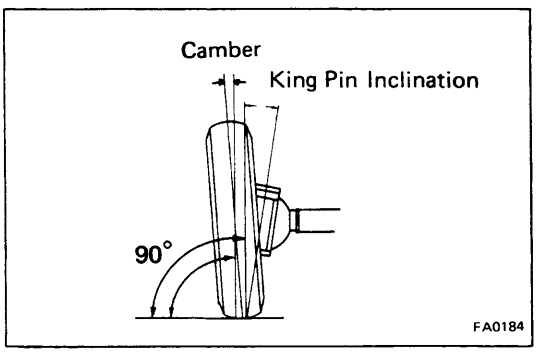

4. CHECK CASTER

Caster (at unloaded):
TRUCK 2°15' ± 1°
4-RUNNER 3°00' ± 1°

If caster is not as specified, inspect and replace damaged or worn leaf spring parts.

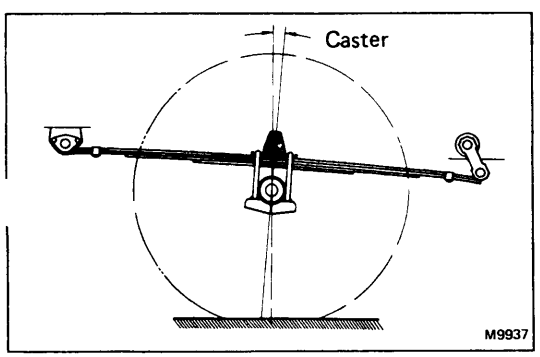

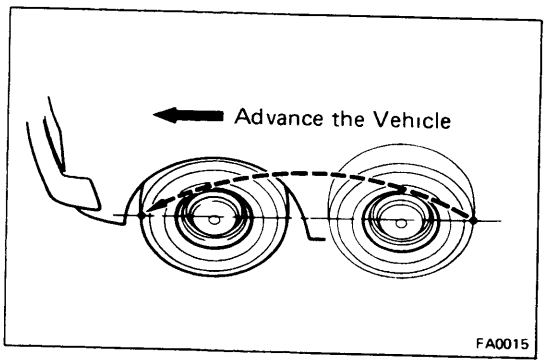

5. ADJUST TOE-IN

(a) Make sure the wheels are positioned straight ahea

(b) Mark the center of each rear tread at spindle heigh and measure the distance between the marks of right and left tires.

(c) Advance the vehicle until the marks on the rear side of the tires come to the front.

NOTE: The toe-in should be measured at the same point on the tire and at the same level.

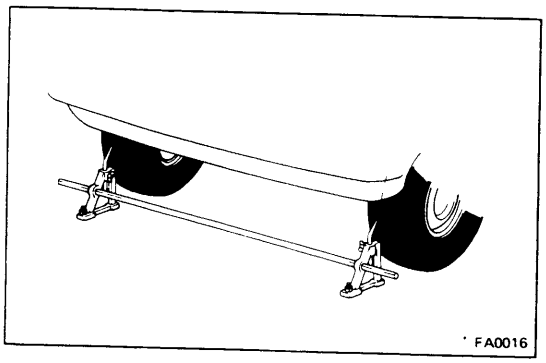

(d) Measure the distance between the marks on the front side of the tires.

Tire	Toe-in mm (in.)	
	Inspection STD	Adjustment STD
Radial	1 ± 4 (0.04 ± 0.16)	1 ± 1 (0.04 ± 0.04)

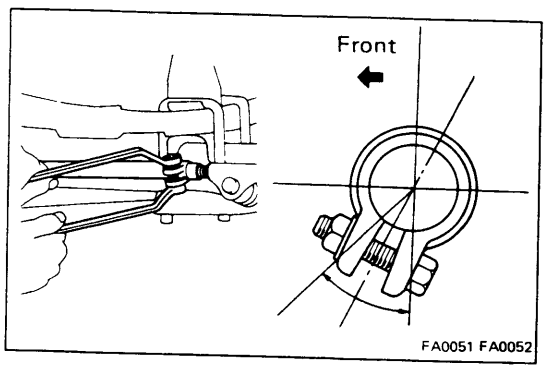

(e) Make sure the steering gear is centered.

(f) Loosen the nuts holding the clamps to the tie rod.

(g) Adjust toe-in to the correct value by turning the tie ro

(h) Torque the nuts holding the clamps.

Torque: 375 kg-cm (27 ft-lb, 37 N·m)

NOTE: The steering damper side clamp opening must be positioned at the front of the tie rod, and face within 45° from straight down as shown in the figure.

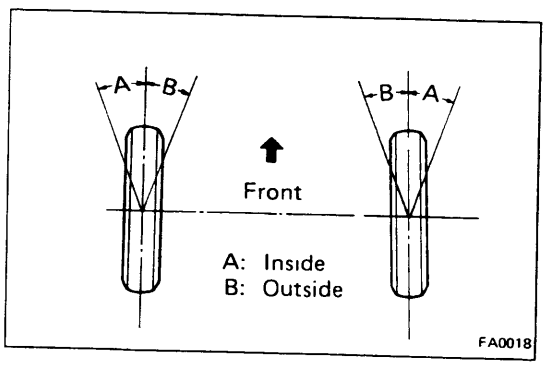

6. ADJUST WHEEL ANGLE

Remove the caps of the knuckle stopper bolts and check the steering angles.

Wheel angle		
Max.	Inside wheel	30°30′ $^{+1°}_{-2°}$
	Outside wheel	29°
at 20°	Inside wheel	20°30′
	Outside wheel	20°

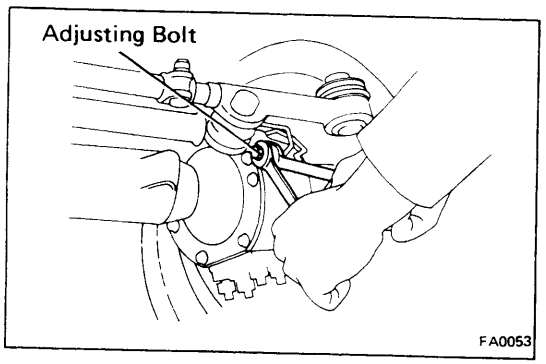

NOTE: When the steering wheel is fully turned, make sure that the wheel is not touching the body or brake flexible hose.

If maximum steering angles differ from the standard value, adjust the wheel angle with the knuckle stopper bolts.

Torque: 480 kg-cm (35 ft-lb, 47 N·m)

If the wheel angle still cannot be adjusted within limits, inspect and replace damaged or worn steering parts.

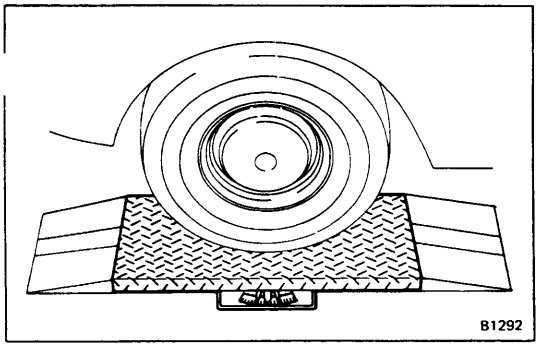

7. INSPECT SIDE SLIP WITH SIDE SLIP TESTER

Side slip limit:

Less than 3.0 mm/m (0.118 in./3.3 ft)

If the side slip exceeds the limit, the toe-in or other front wheel alignment may not be correct.

FREE WHEELING HUB (4WD)

COMPONENTS

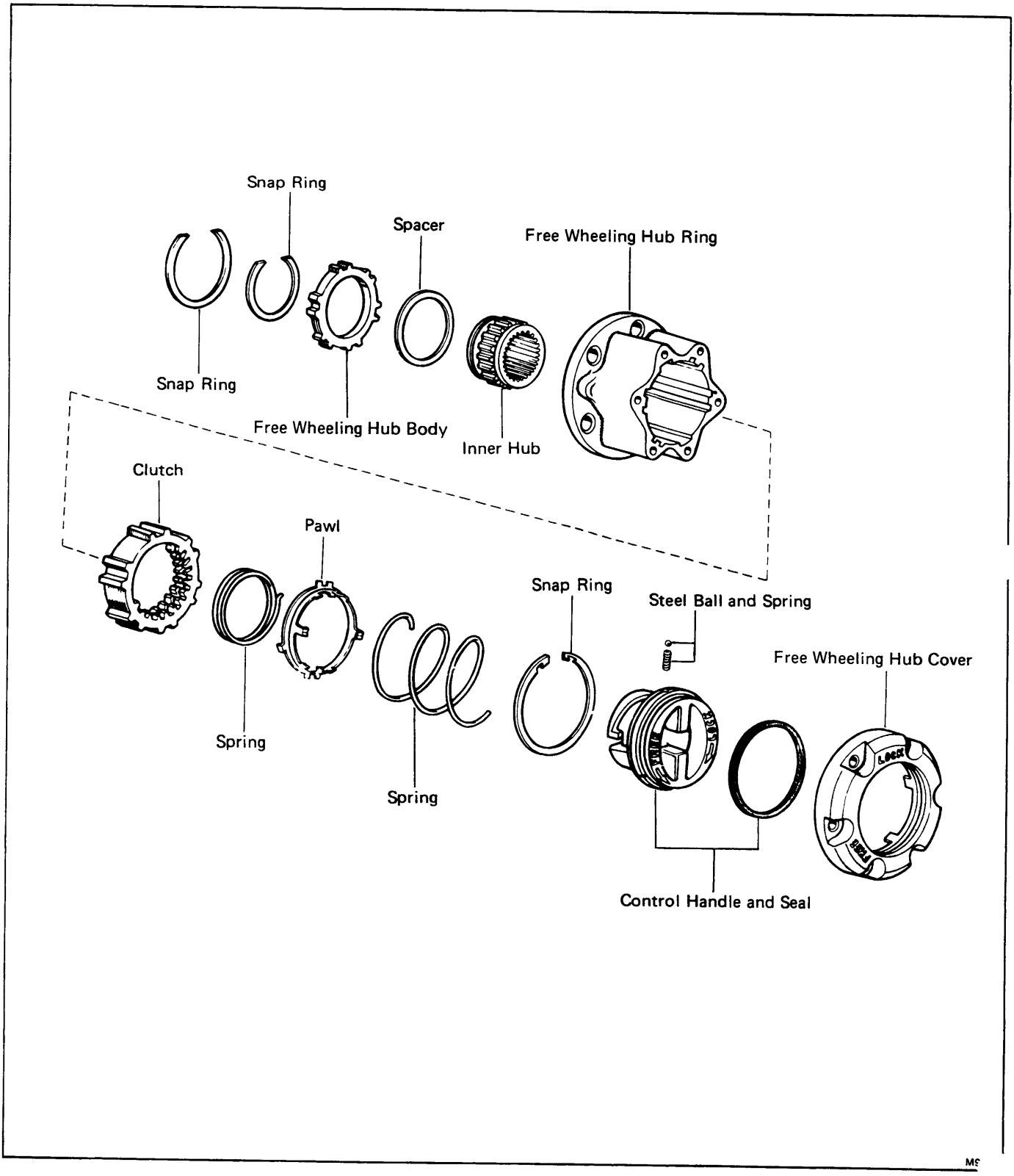

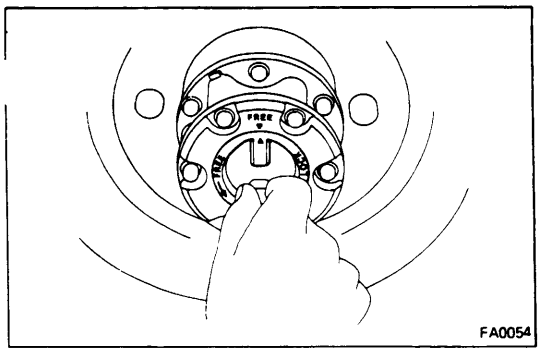

REMOVAL OF FREE WHEELING HUB

1. REMOVE FREE WHEELING HUB COVER

(a) Set the control handle to FREE.

(b) Remove the cover mounting bolts and pull off the cover.

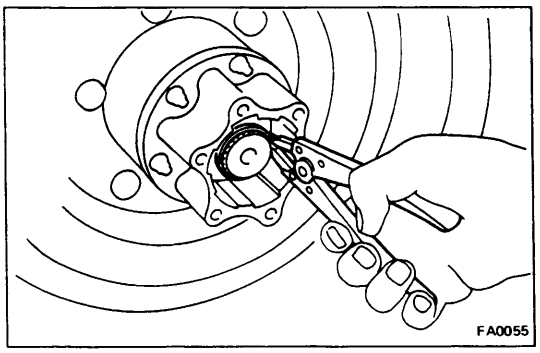

2. REMOVE SNAP RING

Using snap ring pliers, remove the snap ring.

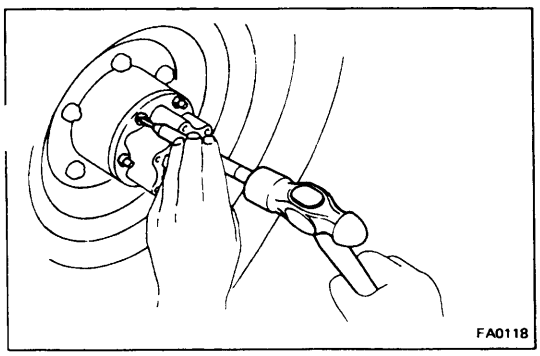

3. REMOVE FREE WHEELING HUB BODY

(a) Remove the mounting nuts.

(b) Using a tapered punch, tap on the slits of the cone washers and remove them.

(c) Pull off the free wheeling hub body.

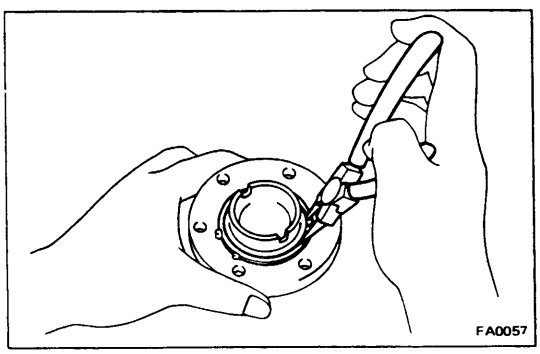

DISASSEMBLY OF FREE WHEELING HUB

1. REMOVE CONTROL HANDLE FROM FREE WHEELING HUB COVER

(a) Using snap ring pliers, remove the snap ring.

(b) Remove the control handle.

(c) Remove the steel ball and spring from the control handle.

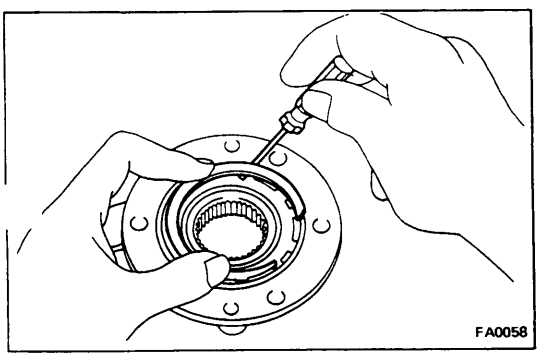

2. REMOVE INNER HUB AND FREE WHEELING HUB RING FROM FREE WHEELING HUB BODY

(a) Using a screwdriver, remove the snap ring.

(b) Remove the inner hub and free wheeling hub ring.

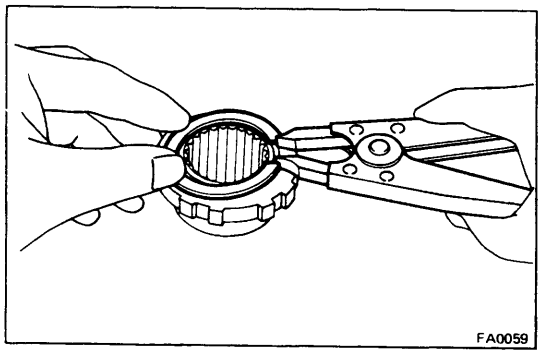
FA0059

3. **REMOVE FREE WHEELING HUB RING FROM INNER HUB**
   (a) Using snap ring pliers, remove the snap ring.
   (b) Remove the free wheeling hub ring and spacer.

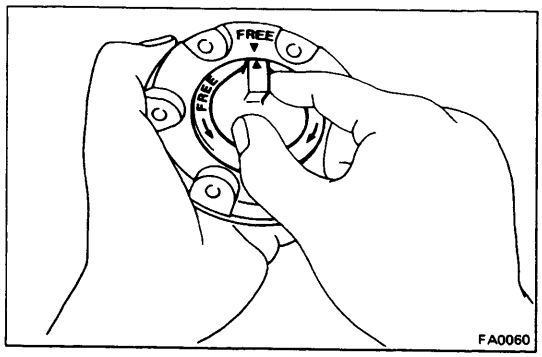

FA0060

INSPECTION OF FREE WHEELING HUB

1. **INSPECT COVER, HANDLE AND SEAL**
   (a) Temporarily install the handle in the cover and check that the handle moves smoothly and freely.

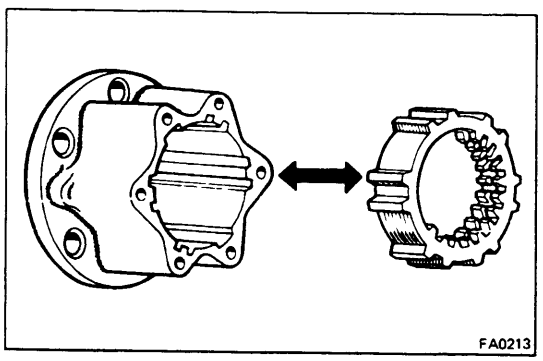
FA0213

2. **INSPECT BODY AND CLUTCH**
   (a) Check that the clutch moves smoothly in the body.

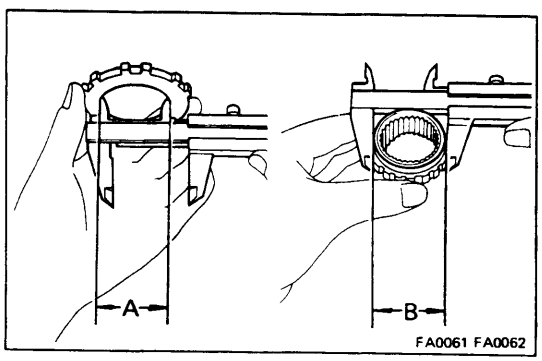

FA0061 FA0062

3. **MEASURE THE OIL CLEARANCE BETWEEN THE INNER HUB AND FREE WHEELING HUB RING**
   Oil clearance (A – B): 0.3 mm (0.012 in.)

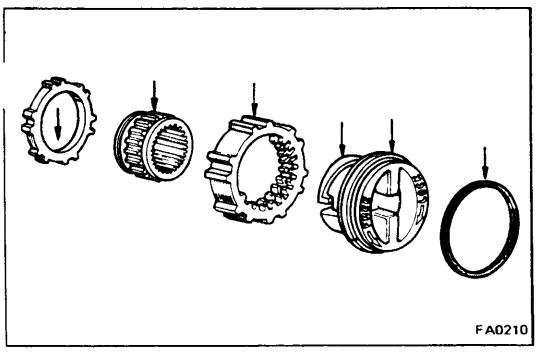

ASSEMBLY OF FREE WHEELING HUB

(See page FA-28)

1. APPLY MP GREASE TO SLIDING SURFACE OF PARTS

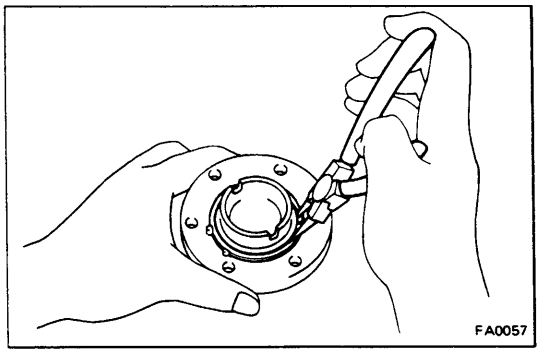

2. INSTALL CONTROL HANDLE TO COVER

(a) Install the seal, spring and steel ball to the handle.

(b) Insert the handle in the cover and install the snap ring with snap ring pliers.

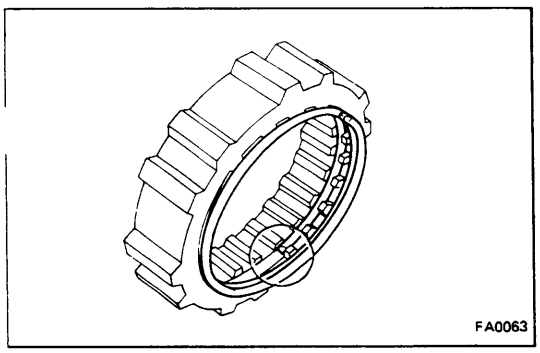

3. INSTALL TENSION SPRING IN CLUTCH

Install the tension spring in the clutch with the spring end aligned with the initial groove.

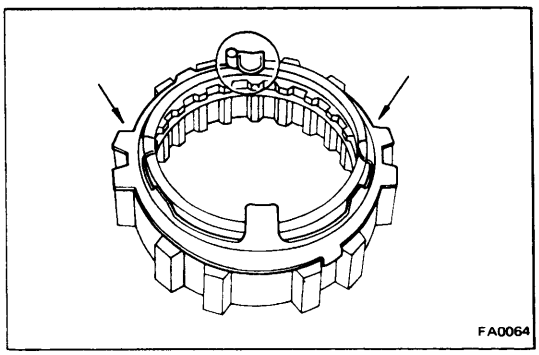

4. INSTALL FOLLOWER PAWL TO CLUTCH

(a) Place the follower pawl on the tension spring with one of the large tabs against the bent spring end.

(b) Place the top ring of the spring on the small tabs.

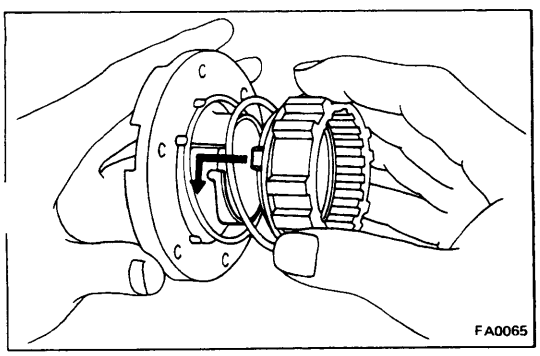

5. INSTALL CLUTCH AND SPRING INTO COVER

(a) Place the spring between the cover and clutch with the large spring end toward the cover.

(b) Compress the spring and install the clutch with the pawl tab fit to the handle cam.

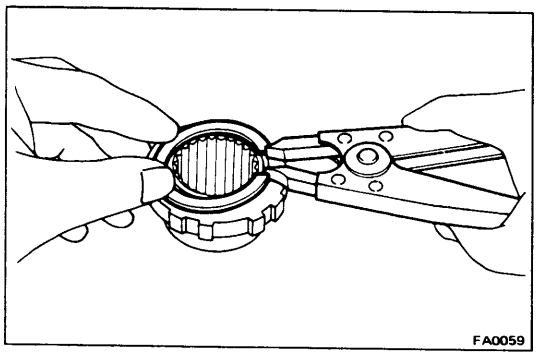

6. INSTALL SPACER AND FREE WHEELING HUB RING TO INNER HUB

(a) Install the spacer and free wheeling hub ring to the inner hub.

(b) Using snap ring pliers, install the snap ring.

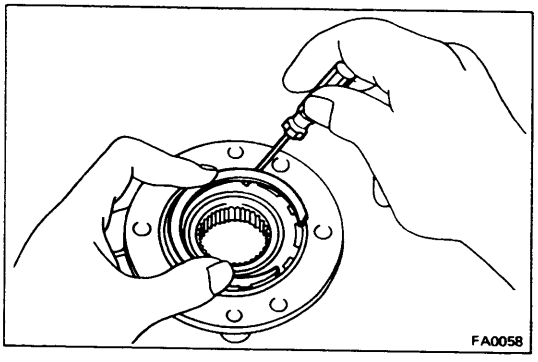

7. INSTALL INNER HUB AND FREE WHEELING HUB RING IN FREE WHEELING HUB BODY

(a) Insert the inner hub and free wheeling hub ring in the body.

(b) Using a screwdriver, install the snap ring.

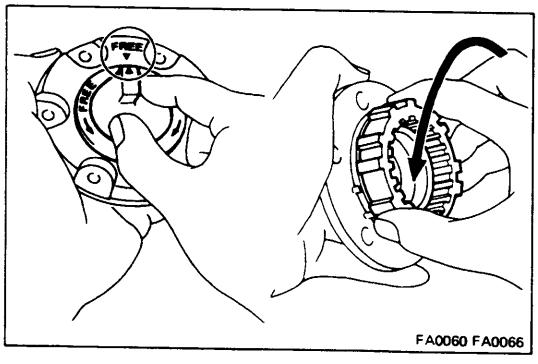

8. TEMPORARILY INSTALL COVER TO BODY AND CHECK FREE WHEELING HUB

(a) Set the control handle and clutch to the free position.

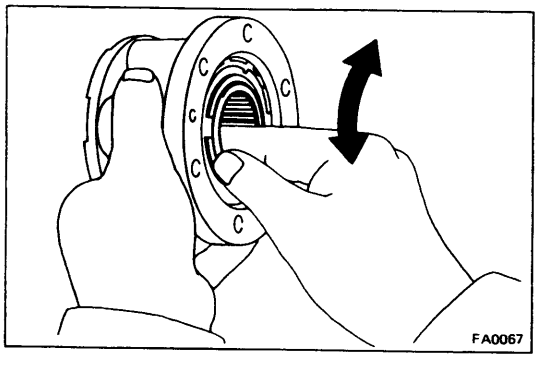

(b) Insert the cover in the body and verify that the inner hub turns smoothly.

(c) Remove the cover from the body.

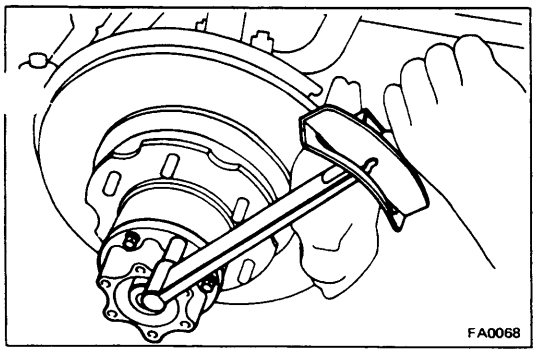

INSTALLATION OF FREE WHEELING HUB

(See page FA-28)

1. INSTALL FREE WHEELING HUB BODY

(a) Place the gasket in position on the front axle hub.

(b) Install the free wheeling hub body with six cone washers and nuts. Tighten the nuts.

Torque: 315 kg-cm (23 ft-lb, 31 N·m)

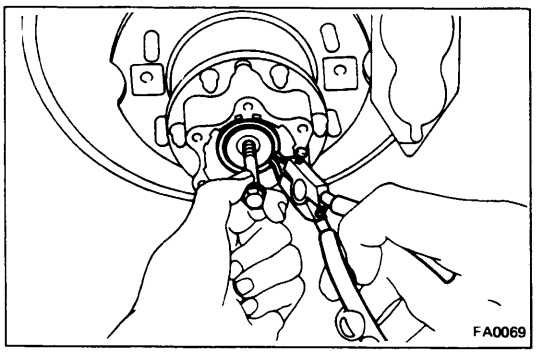

2. INSTALL SNAP RING

(a) Install a bolt in the axle shaft and pull it out.

(b) Using snap ring pliers, install the snap ring.

(c) Remove the bolt.

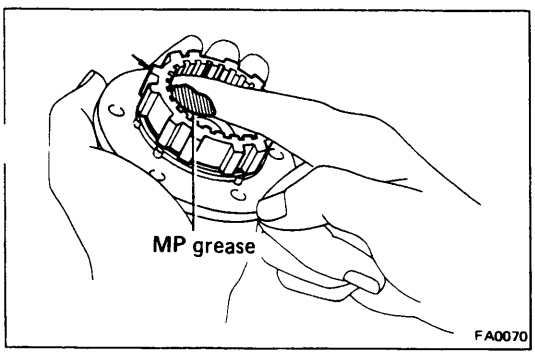

3. APPLY MP GREASE TO INNER HUB SPLINES

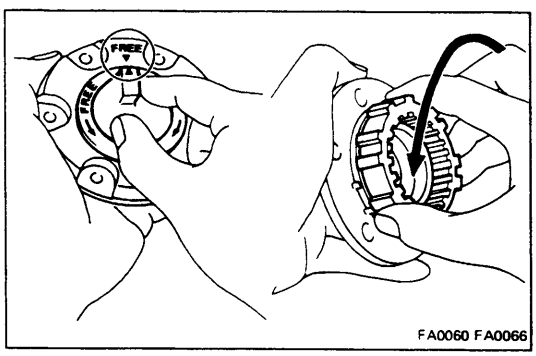

4. INSTALL FREE WHEELING HUB COVER WITH NEW GASKET

(a) Set the control handle and clutch to the free position.

(b) Place a new gasket in position on the cover.

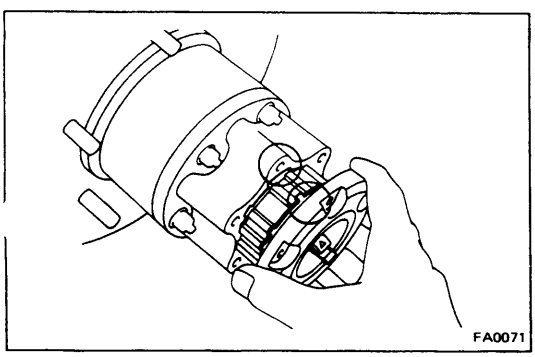

(c) Install the cover to the body with the follower pawl tabs aligned with the non-toothed portions of the body.

(d) Tighten the cover mounting bolts.

Torque: 100 kg-cm (7 ft-lb, 10 N·m)

AUTOMATIC LOCKING HUB (4WD)

TROUBLESHOOTING

Problem	Possible cause	Remedy	Page
Will not lock	Brake shoe worn or damaged	Replace brake assembly	FA-36
Will not unlock	Brake spring weak	Replace brake assembly	FA-36
	Bad rubbing between the inner hub and clutch	Replace hub assembly	FA-36
	Engage and disengage between the clutch and hub body did not go smoothly	Replace hub assembly	FA-36
Abnormal noise	Body and clutch looseness or damage	Replace hub assembly	FA-36
	Looseness of set bolt for axle shaft and inner hub	Tighten or replace hub assembly	FA-36
	Looseness of brake assembly set screw	Replace brake assembly	FA-36
	Needs grease	Apply grease or replace hub assembly	FA-36
Brake drag (ALH)	Outer cam worn or damaged	Replace hub assembly	FA-36
	Front brake dragged	Replace hub assembly	FA-36

COMPONENTS

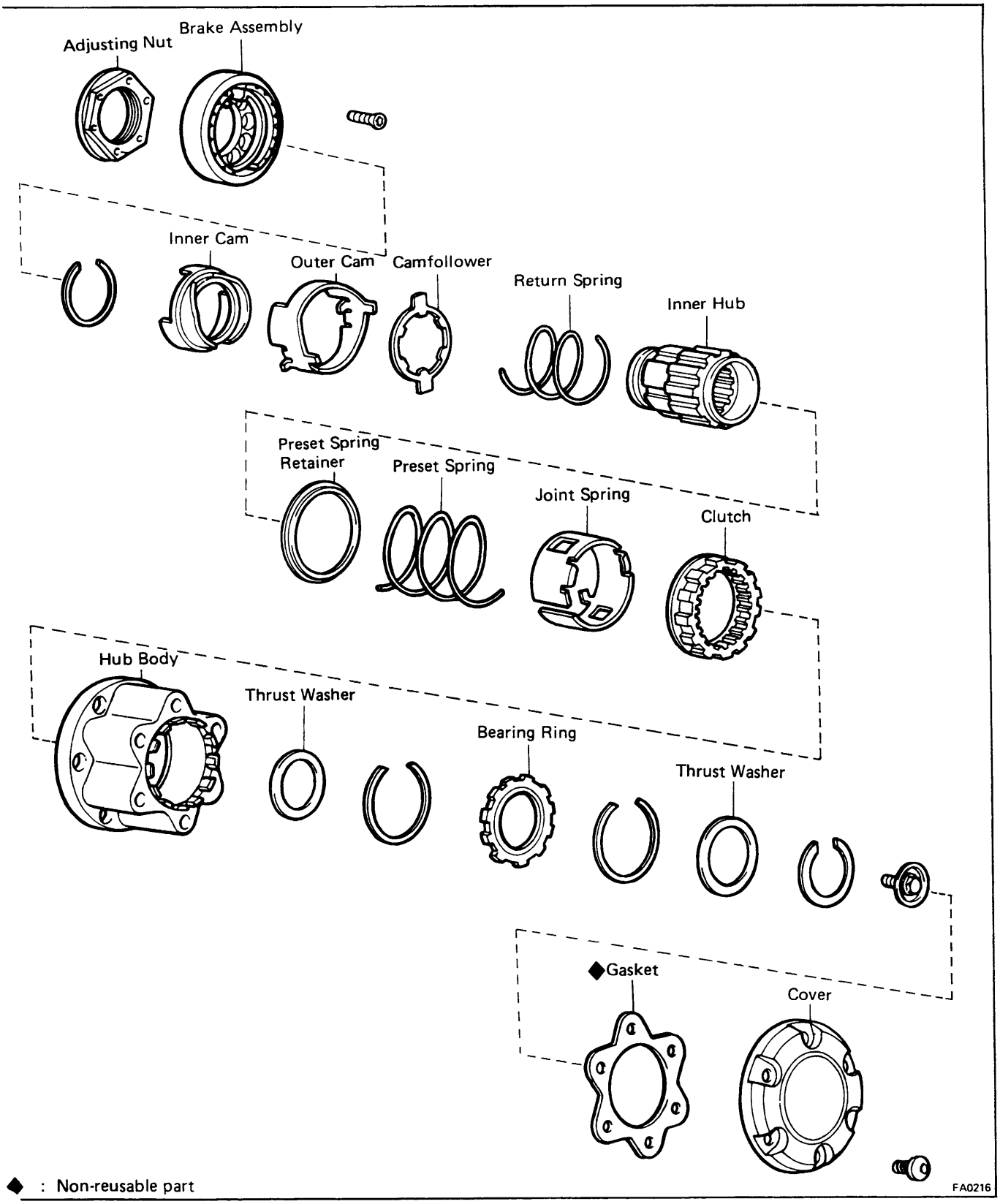
Adjusting Nut
Brake Assembly
Inner Cam
Outer Cam
Camfollower
Return Spring
Inner Hub
Preset Spring Retainer
Preset Spring
Joint Spring
Clutch
Hub Body
Thrust Washer
Bearing Ring
Thrust Washer
◆Gasket
Cover
◆ : Non-reusable part
FA0216

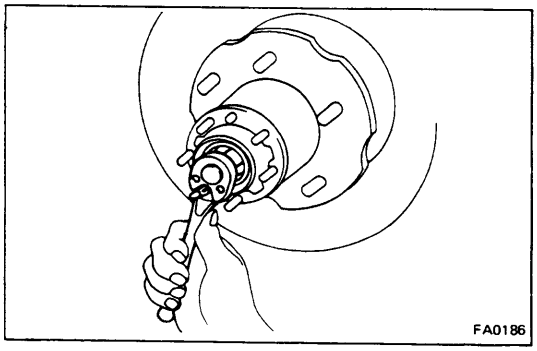

REMOVAL OF AUTOMATIC LOCKING HUB

1. **REMOVE HUB COVER**
2. **REMOVE AXLE BOLT WITH WASHER**

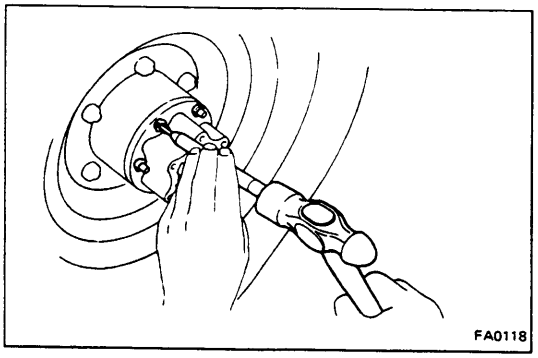

3. **REMOVE HUB BODY**
   (See step 3 of page FA-29)

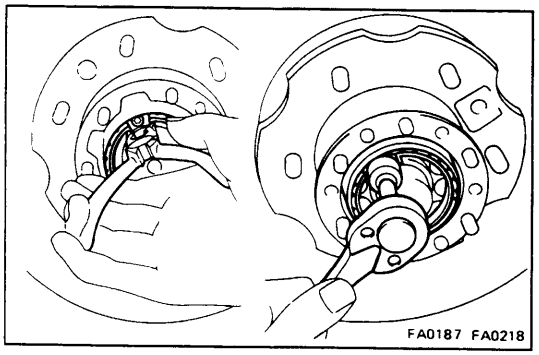

4. **REMOVE BRAKE ASSEMBLY**
   (a) Using needle-nose pliers, compress and turn the brake spring to the position of the screw.

   NOTE: To prevent the spring tension from weakening, not overly compress the spring. Also, do not remove the shoe from the drum.

   (b) Using a torx socket, remove the screw, and also the other two screws in the same manner.
   (c) Remove the brake assembly.

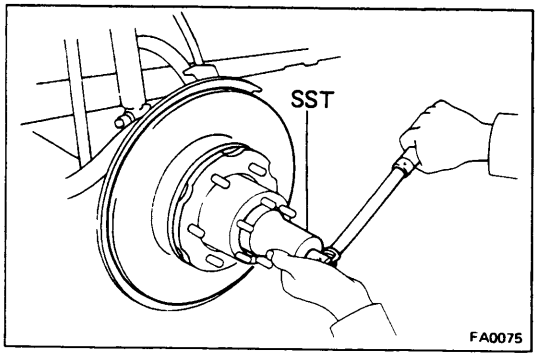

5. **IF NECESSARY REMOVE ADJUSTING NUT**
   (a) Using SST, remove the adjusting nut.

   SST 09607-60020

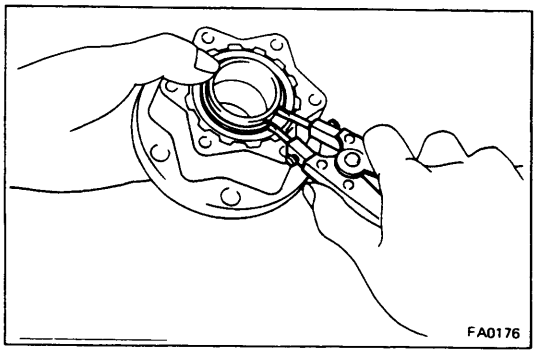

DISASSEMBLY OF AUTOMATIC LOCKING HUB

1. **REMOVE INNER HUB SUBASSEMBLY FROM HUB BODY**
   (a) Using snap ring pliers, remove the snap ring.
   (b) Remove the inner hub subassembly from the hub.

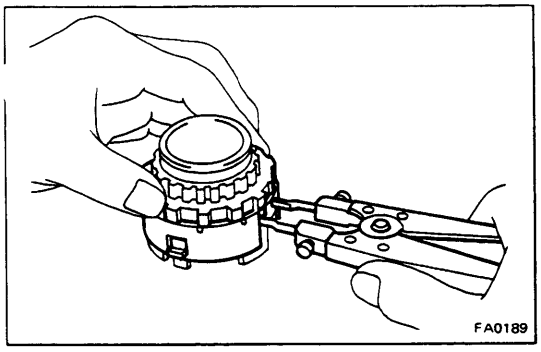

2. **REMOVE CLUTCH WITH JOINT SPRING, PRESET SPRING AND SPRING RETAINER**

(a) Using snap ring pliers, extend the joint spring and release it from the cam follower claw.

NOTE: Be careful not to stretch the spring too much.

(b) Remove the clutch with the joint spring, preset spring and spring retainer.

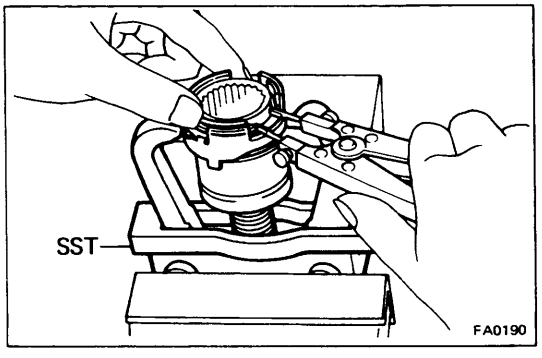

3. **REMOVE OUTER CAM WITH INNER CAM, CAM FOLLOWER AND RETURN SPRING**

(a) Using SST, attach it to the cam follower claw and then compress the return spring.

SST 09950-20015

(b) Using snap ring pliers, remove the snap ring.

(c) Remove the outer cam with the inner cam, cam follower and return spring.

INSPECTION OF AUTOMATIC LOCKING HUB

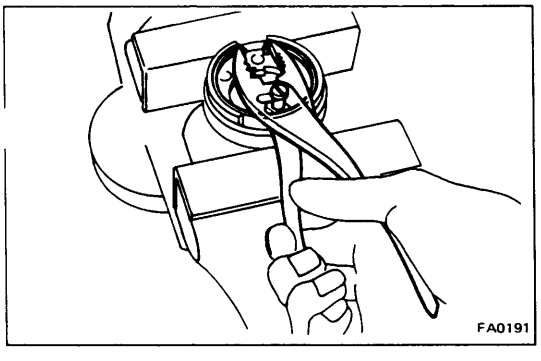

1. **MEASURE BRAKE SHOE THICKNESS**

(a) Using pliers, compress the brake spring and slightly draw it out from the drum.

NOTE: To prevent the spring tension from weakening, do not overly compress the spring. Also, do not remove the shoe from the drum.

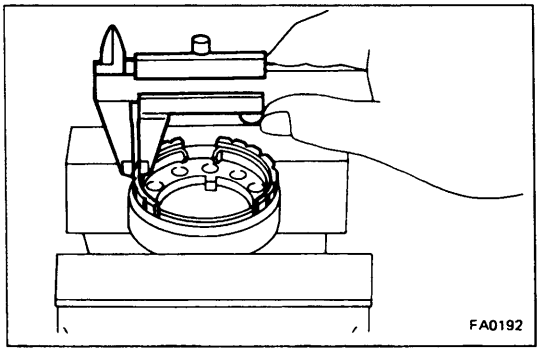

(b) Measure the shoe thickness.

Minimum thickness: 1.0 mm (0.039 in.)

If the shoe thickness is less than minimum, replace the brake assembly.

(c) Using pliers, install the brake shoe all the way back.

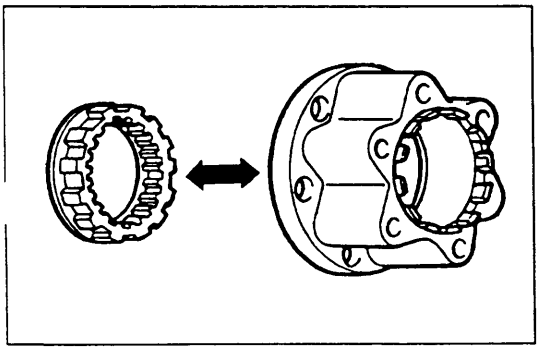

2. **INSPECT HUB BODY AND CLUTCH**

(a) Check to see that the hub body and clutch engage and disengage smoothly.

(b) If engage or disengage are not smooth, replace the hub assembly.

3. **INSPECT OTHER PARTS**

(a) Check for abnormal wear or scratches on each part.

(b) If there are abnormal wear or scratches, replace the hub assembly.

ASSEMBLY OF AUTOMATIC LOCKING HUB

(See page FA-35)

NOTE: The automatic locking hub is maintenance free, and requires no grease except when foreign matter becomes attached or cleaning becomes necessary.

When greasing, use the grease listed below:
BENTON TYPE GREASE "PLUSGUARD SG"
ARCO CALDRON EP2
CASTROL WB or Equivalent

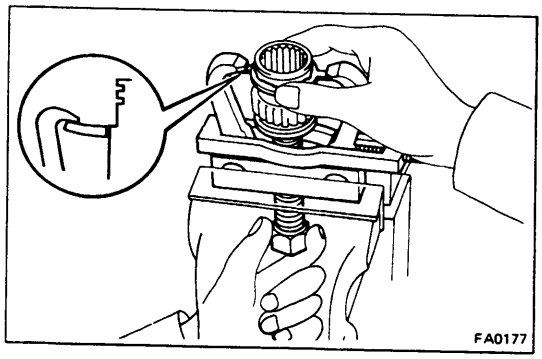

1. ADJUST HEIGHT OF SST

(a) Position SST. Place the clutch hub above it and insert the cam follower.

SST 09950-20015

(b) Adjust the height of SST so the cam follower meshes with the inner hub spline and also so the cam follower claw aligns with the claw of SST.

(c) Remove the cam follower.

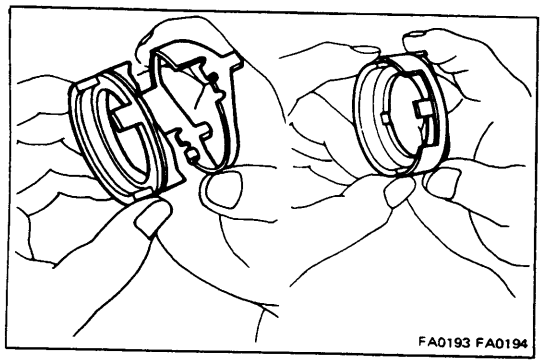

2. ASSEMBLE OUTER CAM, INNER CAM

(a) Align the inner cam notch with the outer cam claw and insert it.

(b) Align the positions of the inner and outer cam.

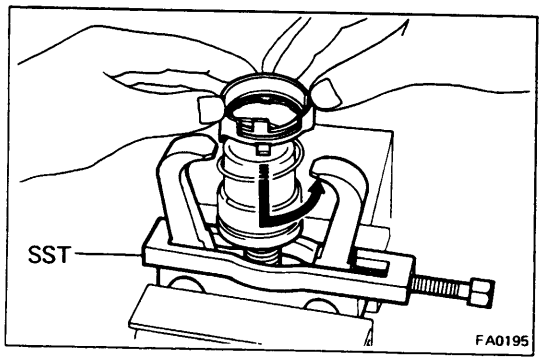

3. ASSEMBLE RETURN SPRING, CAM FOLLOWER, OUTER CAM WITH INNER CAM TO INNER HUB

(a) Install the return spring.

NOTE: Set the follower claw to the spring end of the return spring.

(b) Align the cam follower with the outer cam with inner cam and install it to the inner hub.

(c) Compress the return spring and attach the cam follower claw to SST.

SST 09950-20015

(d) Using snap ring pliers, secure the snap ring.

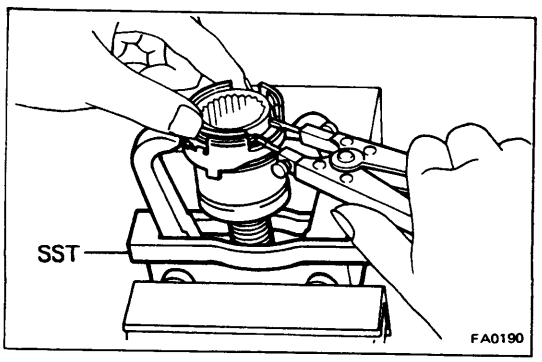

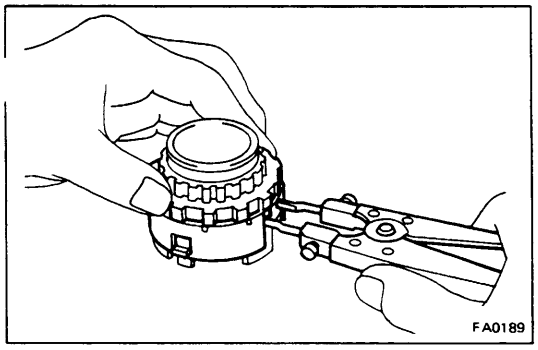

4. INSTALL CLUTCH, JOINT SPRING, PRESET SPRING, SPRING RETAINER TO INNER HUB

(a) Install the joint spring to the clutch.

(b) Install the spring retainer and preset spring to the clutch.

(c) Install the joint spring with the clutch to the inner hub. Using snap ring pliers, expand the spring and attach it to the cam follower.

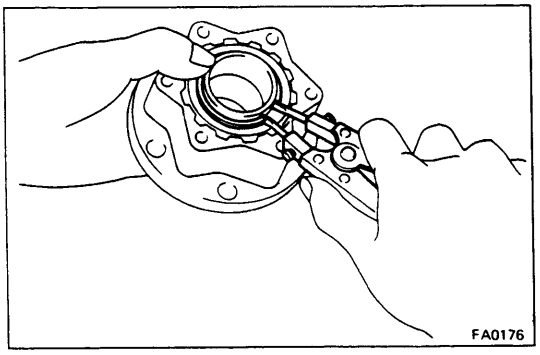

5. INSTALL INNER HUB ASSEMBLY TO HUB BODY

(a) Install the thrust washer to the inner hub.

(b) Install the hub body to the inner hub.

(c) Install the thrust washer.

(d) Using snap ring pliers, secure the snap ring.

INSTALLATION OF AUTOMATIC LOCKING HUB

(See page FA-35)

1. IF NECESSARY, INSTALL ADJUSTING NUT

CAUTION: When converting to an automatic locking type from a type without free wheeling hubs or a manual locking type, a thrust washer must not be installed.

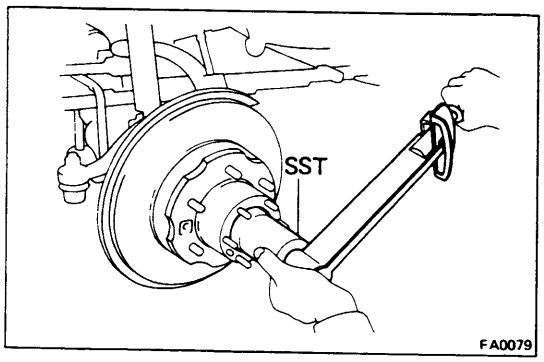

2. ADJUST PRELOAD

(a) Using SST, torque the adjusting nut.

SST 09607-60020

Torque: 600 kg-cm (43 ft-lb, 59 N·m)

(b) Turn the hub right and left two or three times.

(c) Loosen the nut until it can be turned by hand.

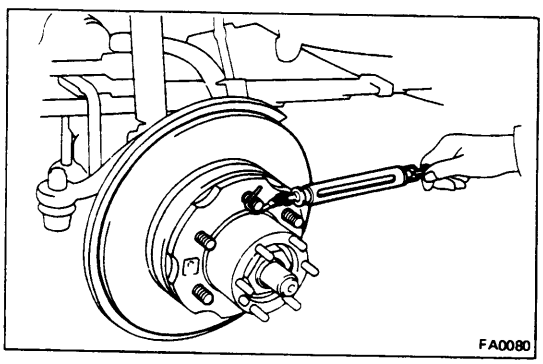

(d) Using a spring tension gauge, measure the frictional force of the oil seal.

(e) Retighten the adjusting nut.

Torque: 250 kg-cm (18 ft-lb, 25 N·m)

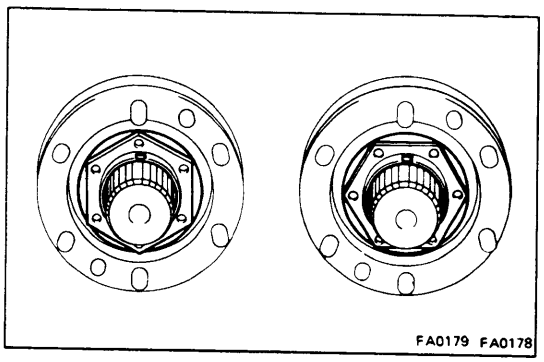

3. INSTALL BRAKE ASSEMBLY

(a) Tighten the adjusting nut by the smallest amount possible and align it in either position shown at left.

(b) Align the brake hub with the spindle groove and fully insert it to where it is up against the adjusting nut. Then confirm that the holes of the brake hub and adjusting nut coincide.

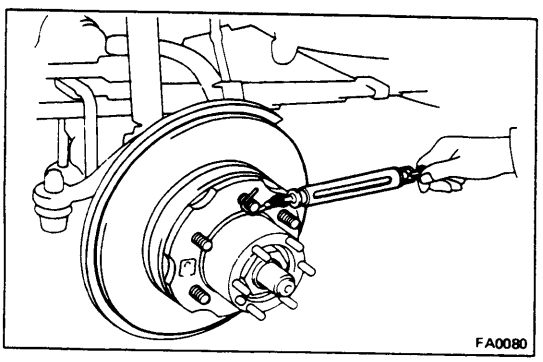

(c) Using a spring tension gauge, check the preload.

Preload (rotating):

Frictional force plus 1.0 — 3.9 kg (2.2 — 8.6 lb, 10 — 38 N)

If not within specification, adjust with the adjusting nut.

(d) Using needle-nose pliers, compress the brake spr by the smallest amount possible and turn it to where the holes of the brake assembly and adjusting nut are aligned.

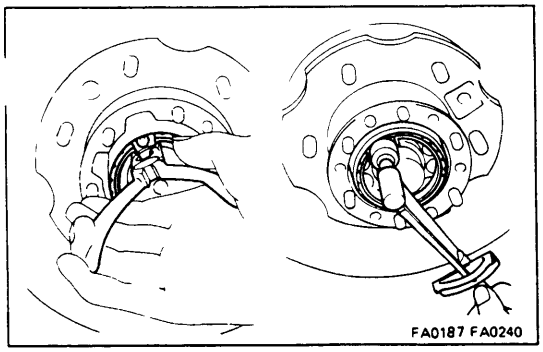
FA0187 FA0240

(e) Using a torx socket, install the screw, and also the other two screws in the same manner and equal distance apart. Torque the screw.

Torque: 70 kg-cm (61 in.-lb, 6.9 N·m)

CAUTION:

1. **Tighten as close to specifications possible.**
2. **Insure that the brake shoe is as far back into the drum as it will go.**

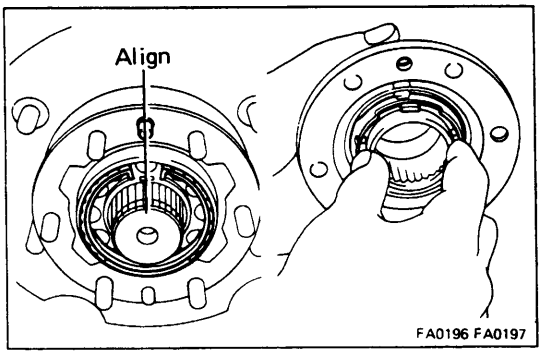

FA0196 FA0197

4. INSTALL AUTOMATIC LOCKING HUB

(a) Align the spring claw of the brake assembly with the knock pin.

(b) Align the inner cam protrusion with the hub body knock pin hole.

(c) Install the hub body. Confirm that the hub body fits perfectly on the axle hub, and then install the six cone washers and nuts.

Torque: 315 kg-cm (23 ft-lb, 31 N·m)

NOTE: If the hub body and axle hub do not fit perfectly, reinstall them.

Spline are not aligned, turn the propeller shaft to align them.

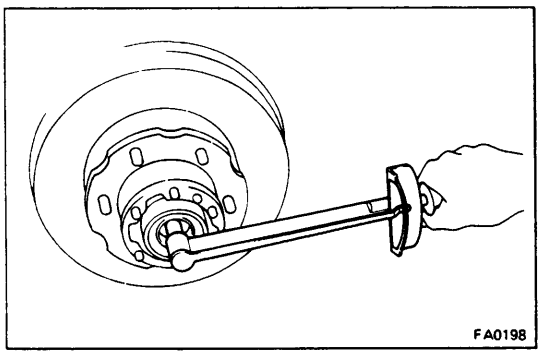
FA0198

5. INSTALL PLATE WASHER WITH NUT

Torque the nut.

Torque: 185 kg-cm (13 ft-lb, 18 N·m)

6. INSTALL COVER

Torque the bolt.

Torque: 100 kg-cm (7 ft-lb, 10 N·m)

CAUTION: When assembling the automatic locking hub, the locking of the left and right hubs may not be identical. So, in the first run after assembly, shift to H4.

OPERATION CHECK

Perform this check with 2 persons.

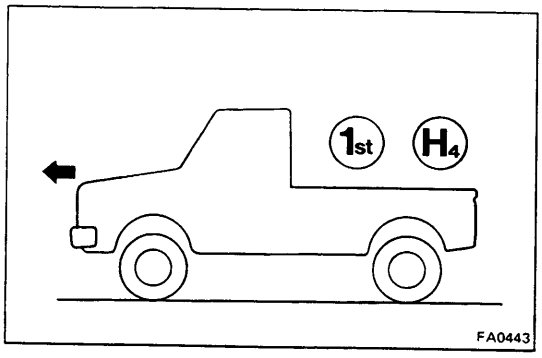

CONFIRMATION OF FORWARD MOTION

1. CHECK LOCK OPERATION

(a) Shift to H4 and 1st position and slowly proceed for several meters.

(b) Stop the vehicle.

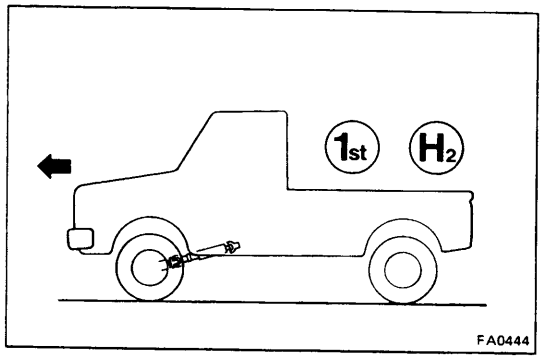

(c) For transfer, shift to H2 and proceed slowly. During this, one person should check under the vehicle to see that the propeller shaft is turning. If turning this means that the automatic locking hub locked.

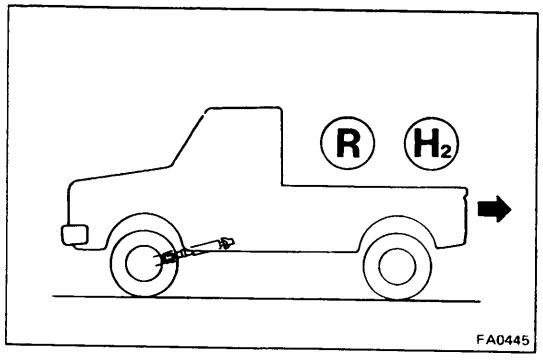

2. CHECK-FREE OPERATION

(a) Transfer is done in H2, shifting to reverse position and backing up several meters.

During this one person should check under the vehicle to see that the propeller shaft is not turning.

CONFIRMATION OF REVERSE MOTION

Reverse is checked in the same manner.

If the event that checking reveals abnormalities, re-confirm the assembly and/or installation.

FRONT AXLE HUB (4WD)

COMPONENTS

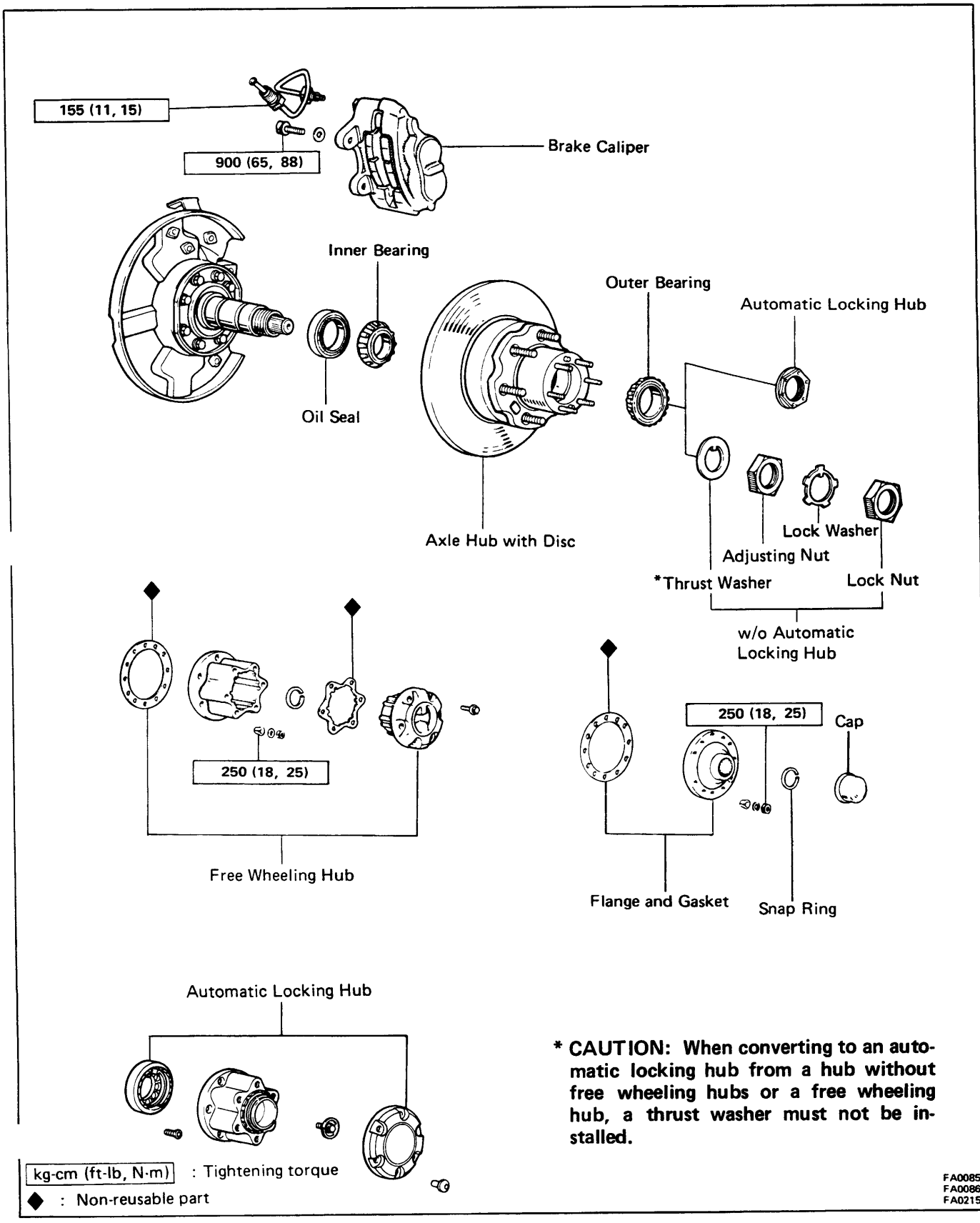

*** CAUTION: When converting to an automatic locking hub from a hub without free wheeling hubs or a free wheeling hub, a thrust washer must not be installed.**

FA0085
FA0086
FA0215

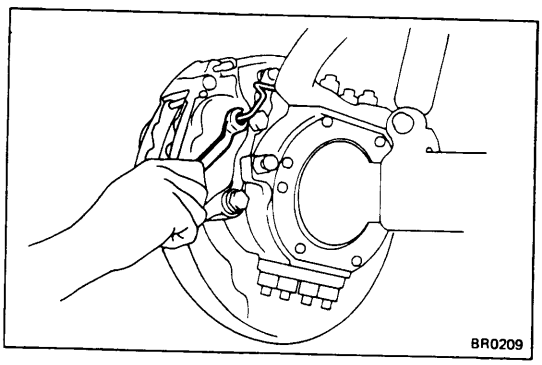

Front Axle Hub

DISASSEMBLY OF FRONT AXLE HUB

1. REMOVE DISC BRAKE CYLINDER

(a) Using SST, disconnect the brake tube.

SST 09751-36011

(b) Remove the disc brake cylinder.

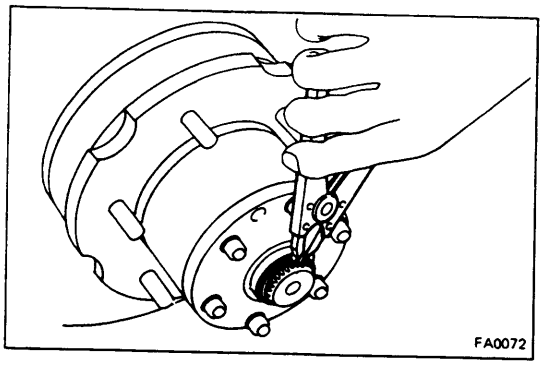

2. REMOVE FLANGE, FREE WHEELING HUB OR AUTOMATIC LOCKING HUB

NOTE: For the free wheeling hub. (See page FA-29)
For the automatic locking hub. (See page FA-36)

(a) Remove the cap from the flange.

(b) Using snap ring pliers, remove the snap ring.

(c) Remove the mounting nuts.

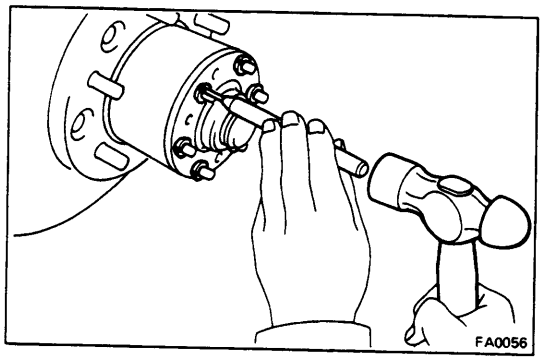

(d) Using a tapered punch, tap the slits of the cone washers and remove them.

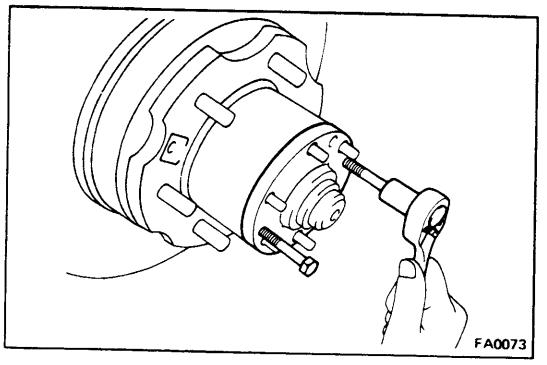

(e) Install and tighten the two bolts, and remove the flange.

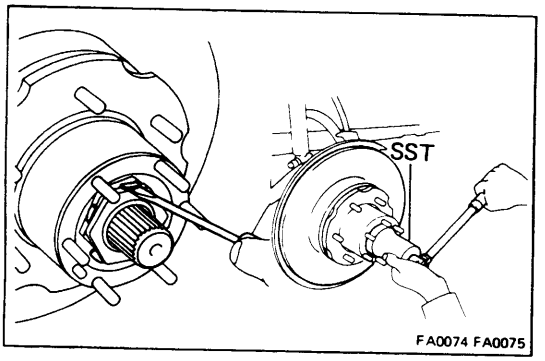

3. REMOVE AXLE HUB WITH DISC

(a) Using a screwdriver, release the lock washer.

(b) Using SST, remove the lock nut.

SST 09607-60020

(c) Remove the lock washer and adjusting nut.

(d) Remove the axle hub with the disc.

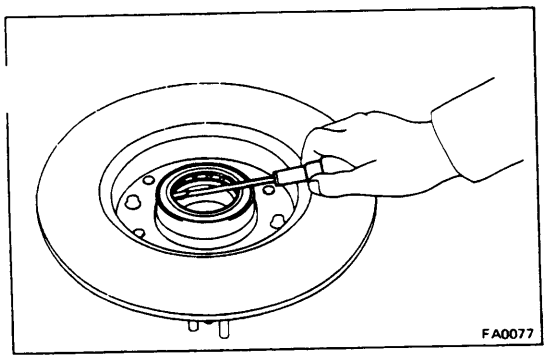

4. **REMOVE INNER BEARING AND OIL SEAL**
   (a) Using a screwdriver, pry out the oil seal.
   (b) Remove the inner bearing from the hub.

INSPECTION AND REPAIR OF FRONT AXLE HUB

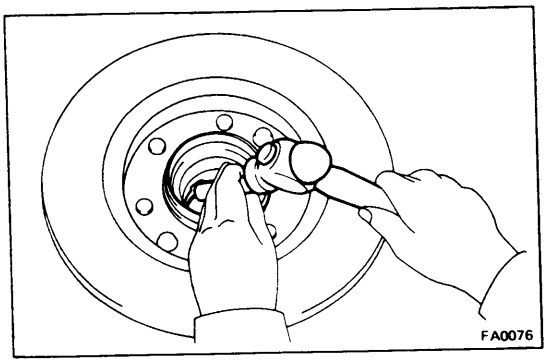

1. **INSPECT BEARING**
   Clean the bearings and outer races and inspect them for wear or damage.

2. **REPLACE BEARING OUTER RACE**
   (a) Using a brass bar and hammer, drive out the bearing outer race.

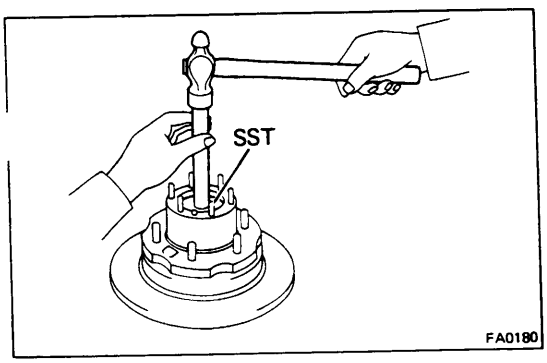

   (b) Using SST, carefully drive in the new bearing outer race.
   SST 09608-35013

ASSEMBLY OF FRONT AXLE HUB

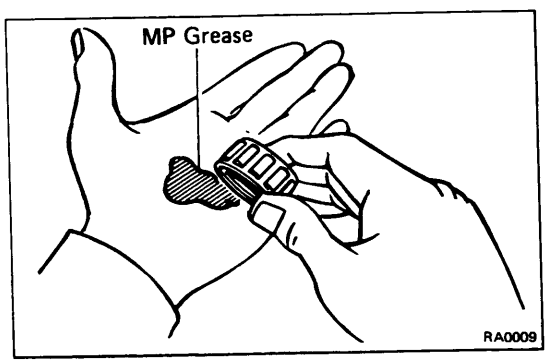

1. **PACK BEARINGS WITH MP GREASE**
   (a) Place MP grease in the palm of your hand.
   (b) Pack grease into the bearing, continuing until the grease oozes out from the other side.
   (c) Do the same around the bearing circumference.

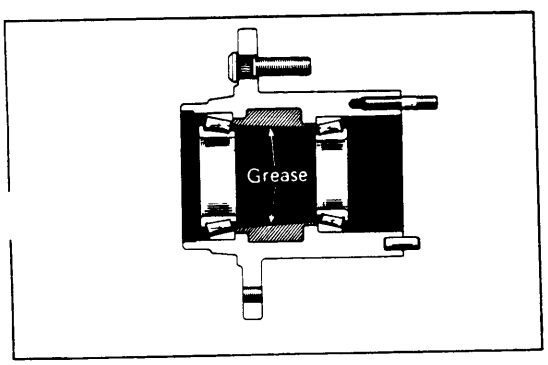

2. **COAT INSIDE OF HUB AND CAP WITH MP GREASE**

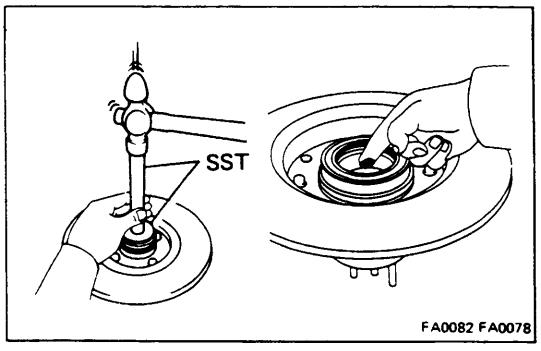

3. INSTALL INNER BEARING AND OIL SEAL

Place inner bearing into the hub. Using SST, drive the oil seal into the hub. Coat the oil seal with MP grease.

SST 09608-35013

4. INSTALL AXLE HUB ON SPINDLE

(a) Place the axle hub on the spindle.

(b) Install the outer bearing and thrust washer.

CAUTION: When converting to an automatic locking hub from a hub without free wheeling hubs or a free wheeling hub, a thrust washer must not be installed.

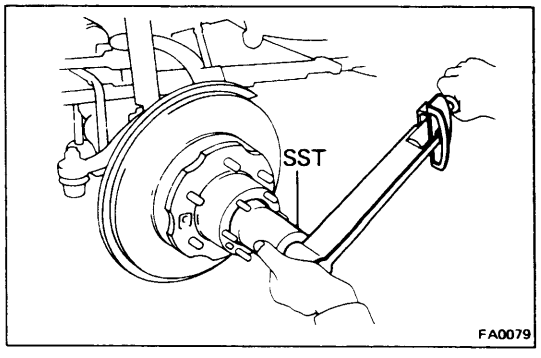

5. ADJUST PRELOAD

(a) Using SST, install and torque the nut.

SST 09607-60020

Torque: 600 kg-cm (43 ft-lb, 59 N·m)

(b) Turn the hub right and left two or three times.

(c) Loosen the nut until it can be turned by hand.

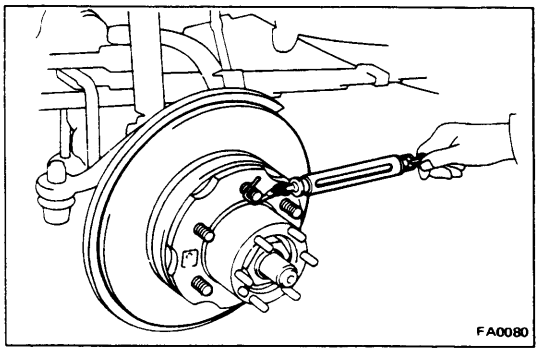

(d) Using a spring tension gauge, measure the frictional force of the oil seal.

(e) Retighten the adjusting nut.

Torque: 250 kg-cm (18 ft-lb, 25 N·m)

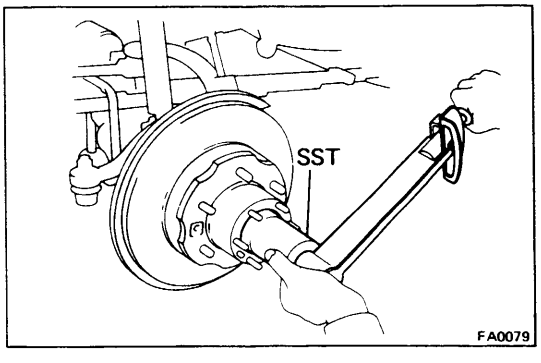

6. INSTALL LOCK WASHER AND LOCK NUT (Ex. AUTOMATIC LOCKING HUB)

(a) Install the lock washer and lock nut.

(b) Using SST, torque the lock nut.

SST 09607-60020

Torque: 450 kg-cm (33 ft-lb, 44 N·m)

(c) Check that the bearing has no play.

(d) Using a spring tension gauge, check the preload.

Preload (rotating):
Frictional force plus 2.8 — 5.6 kg
(6.2 — 12.3 lb, 27 — 55 N·m)

If not within specification, adjust with the adjusting nut.

(e) Secure the lock nut by bending one of the lock washer teeth inward and another lock washer teeth outward.

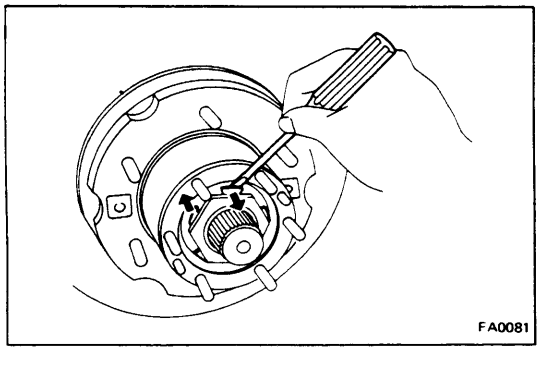

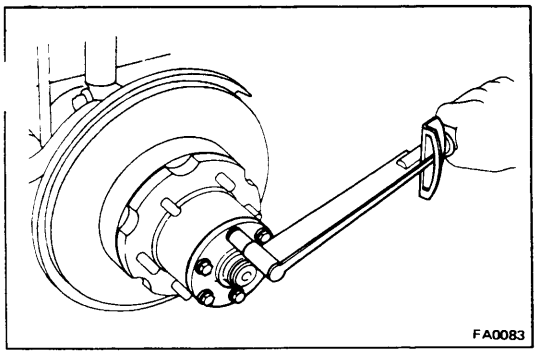

7. **INSTALL FLANGE, FREE WHEELING HUB OR AUTOMATIC LOCKING HUB**

NOTE: In case of the free wheeling hub. (See page FA-33)
In case of the automatic locking hub. (See page FA-40)

(a) Place the gasket in position on the axle hub.

(b) Install the flange to the axle hub.

(c) Install six cone washers and nuts.
Torque the nuts.

Torque: 315 kg-cm (23 ft-lb, 31 N·m)

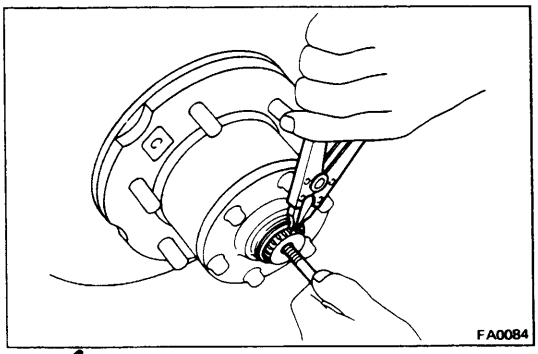

(d) Install a bolt in the axle shaft and pull it out.

(e) Using snap ring pliers, install the snap ring.

(f) Remove the bolt.

(g) Install the cap to the flange.

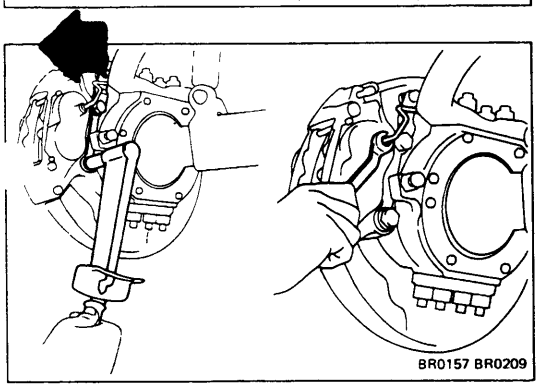

8. **INSTALL BRAKE CALIPER**

(a) Install the brake caliper to the steering knuckle.
Torque the mounting bolts.

Torque: 900 kg-cm (65 ft-lb, 88 N·m)

(b) Using SST, connect the brake tube.

SST 09751-36011

Torque: 155 kg-cm (11 ft-lb, 15 N·m)

STEERING KNUCKLE AND AXLE SHAFT (4WD)

COMPONENTS

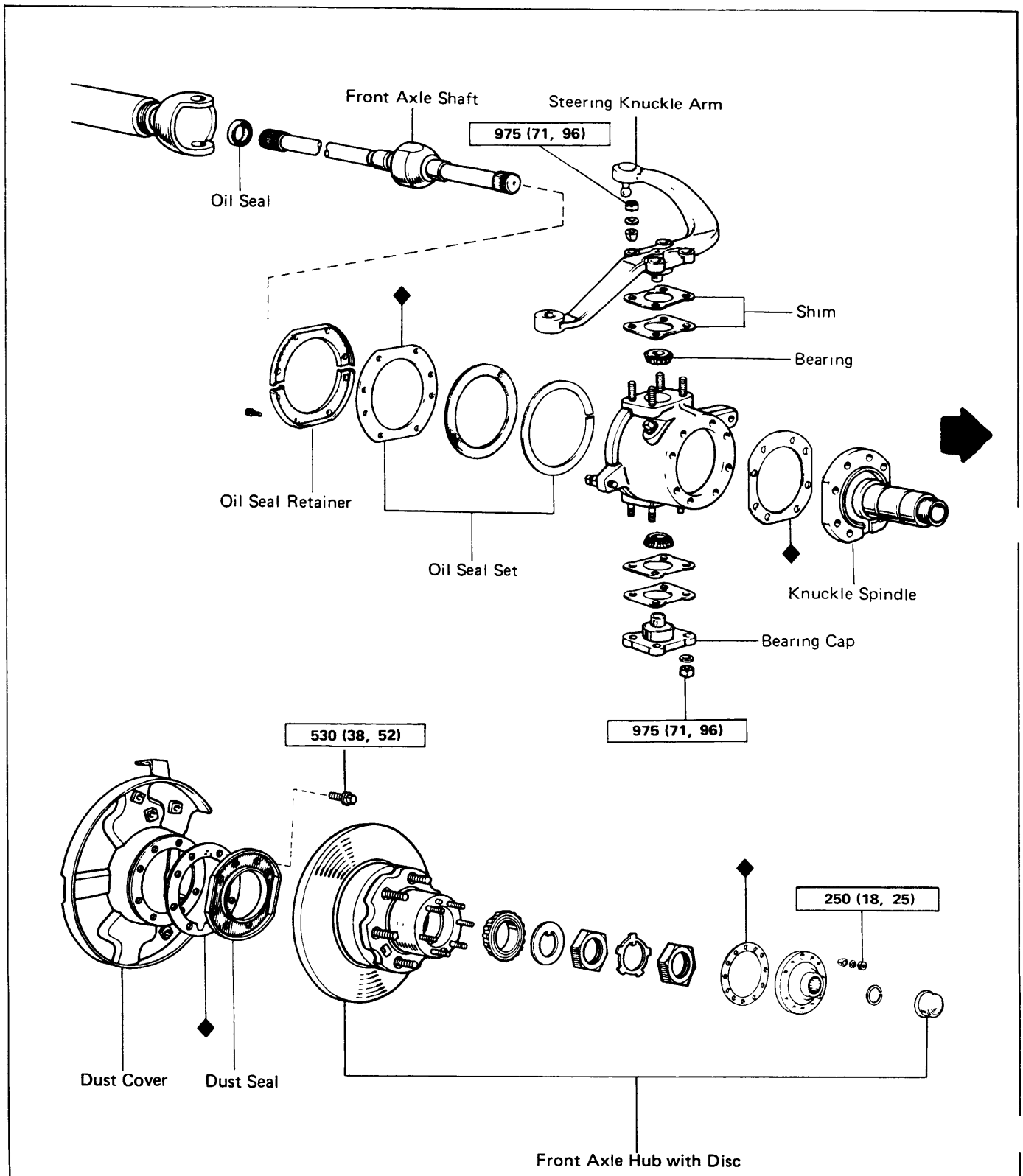

kg-cm (ft-lb, N·m) : Tightening torque

◆ : Non-reusable part

FA0087
FA0231

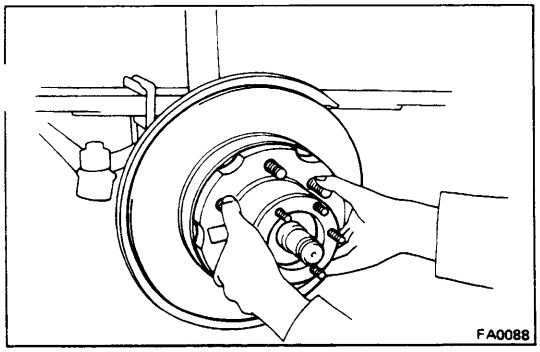

DISASSEMBLY OF STEERING KNUCKLE AND AXLE SHAFT

1. **REMOVE FRONT AXLE HUB**
   (See page FA-44)

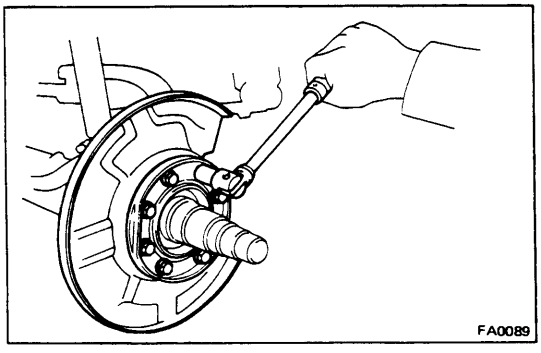

2. **REMOVE KNUCKLE SPINDLE MOUNTING BOLTS**

3. **REMOVE DUST SEAL AND DUST COVER**

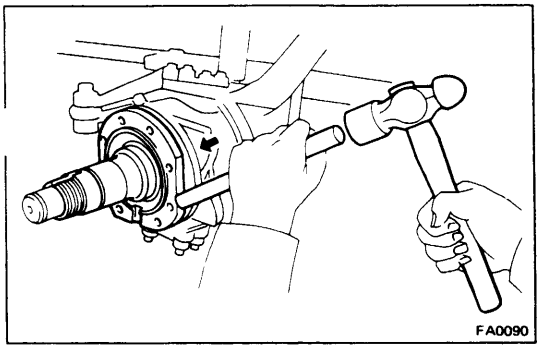

4. **REMOVE KNUCKLE SPINDLE**
   Using a brass bar, tap the knuckle spindle off of the steering knuckle.

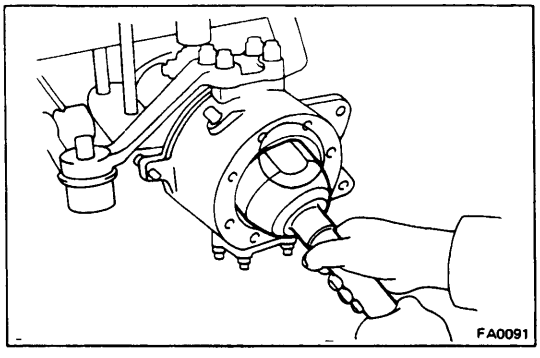

5. **REMOVE AXLE SHAFT**
   Position one flat part of the outer shaft upward and pull out the axle shaft.

6. **REMOVE OIL SEAL SET RETAINER**

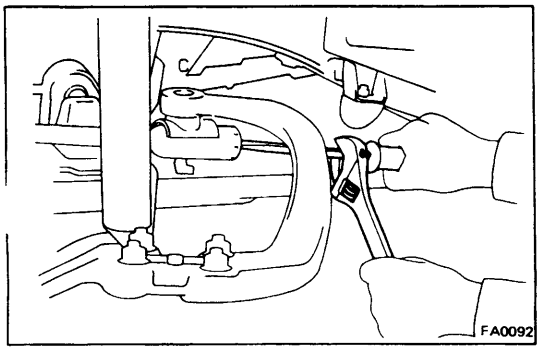

7. **DISCONNECT DRAG LINK FROM KNUCKLE ARM**
   (a) Remove the cotter pin from the drag link end.
   (b) Using a screwdriver, remove the plug.
   (c) Disconnect the drag link from the knuckle arm.

B02215

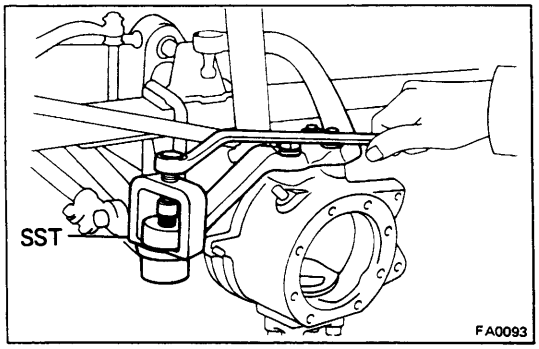

8. DISCONNECT TIE ROD FROM KNUCKLE ARM

Using SST, disconnect the tie rod from the knuckle arm.

SST 09611-22012

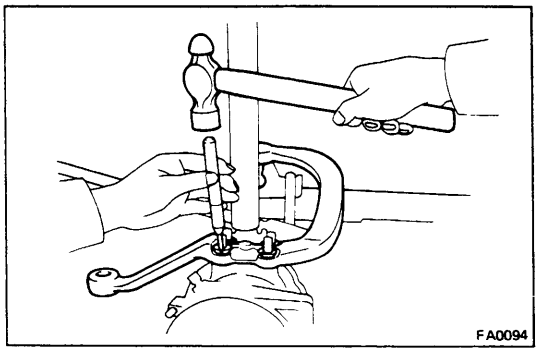

9. REMOVE KNUCKLE ARM AND BEARING CAP

(a) Remove the knuckle arm and bearing cap mounting nuts.

(b) Using a tapered punch, tap the slits of the cone washers and remove them from the knuckle arm.

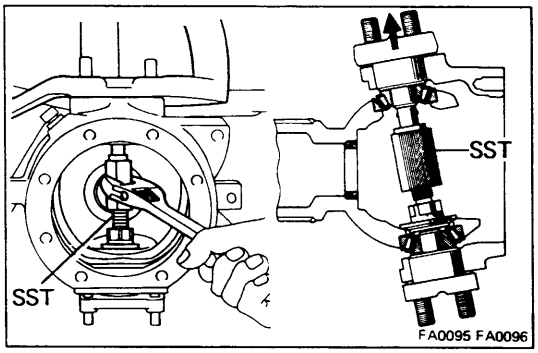

(c) Using SST, push out the knuckle arm and shims from the steering knuckle.

SST 09606-60020

NOTE: Use the SST without a collar.

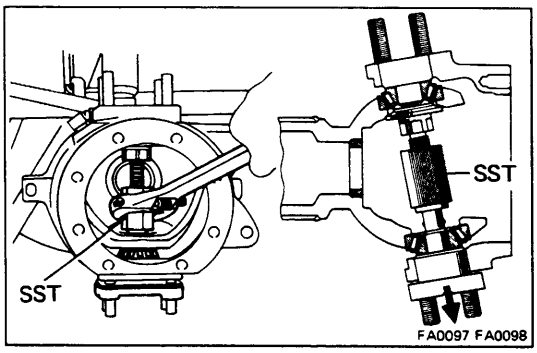

(d) Using SST, push out the bearing cap and shims from the steering knuckle.

SST 09606-60020

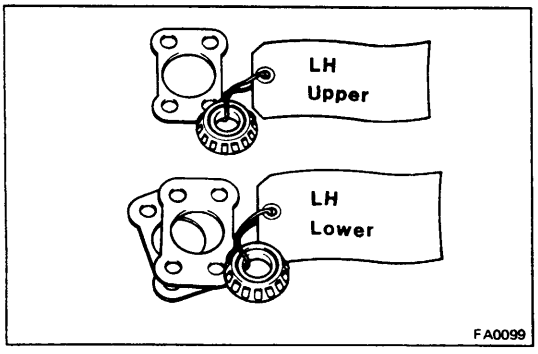

10. REMOVE STEERING KNUCKLE AND BEARINGS

NOTE: Mark the removed adjusting shims and bearings so as to enable reassembling them to their proper positions.

INSPECTION AND REPAIR OF STEERING KNUCKLE AND AXLE SHAFT

1. INSPECT KNUCKLE SPINDLE

Clean the knuckle spindle and inspect the bushing for wear or damage.

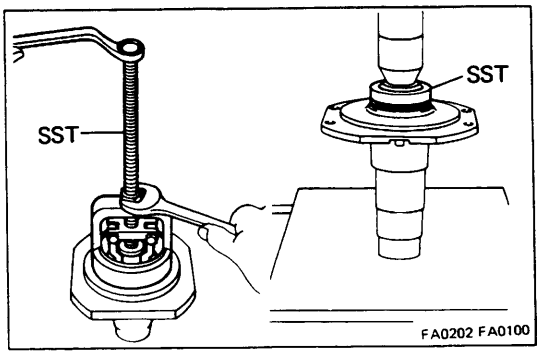

2. REPLACE BUSHING

(a) Using SST, remove the bushing.

SST 09612-65013

(b) Using SST, press a new bushing into the spindle.

SST 09608-35013

3. INSPECT BEARING

Clean the bearings and outer races and inspect them for wear or damage.

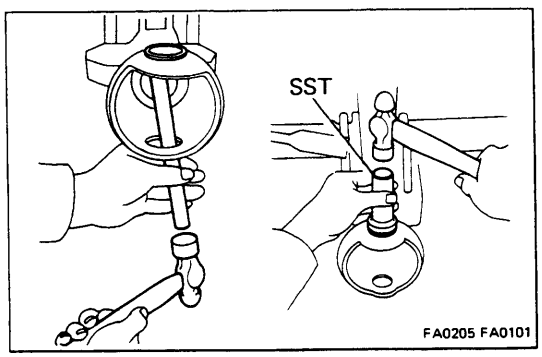

4. IF NECESSARY, REPLACE BEARING OUTER RACE

(a) Using a brass bar, drive out the bearing outer race.

(b) Using SST, carefully drive in a new bearing outer race.

SST 09605-60010

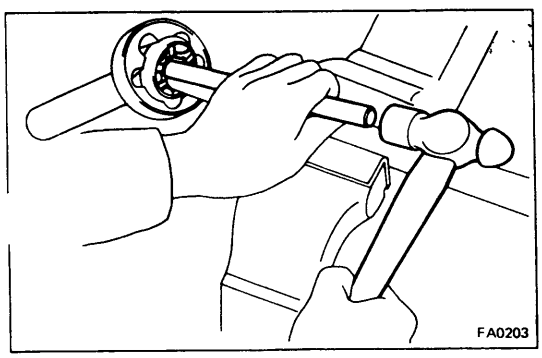

5. INSPECT BIRFIELD JOINT INNER PARTS

(a) Hold the inner shaft in a vise.

(b) Place a brass bar against the joint inner race and drive out the outer shaft.

B02217

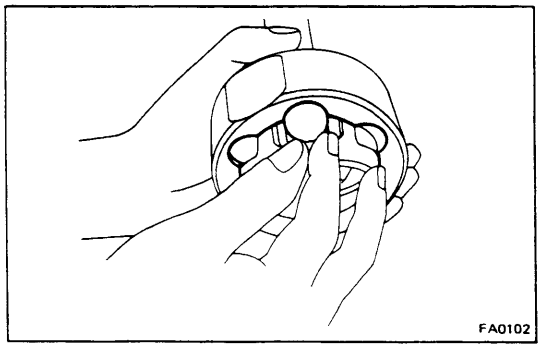

(c) Tilt the inner race and cage and take out the bearing balls one by one.

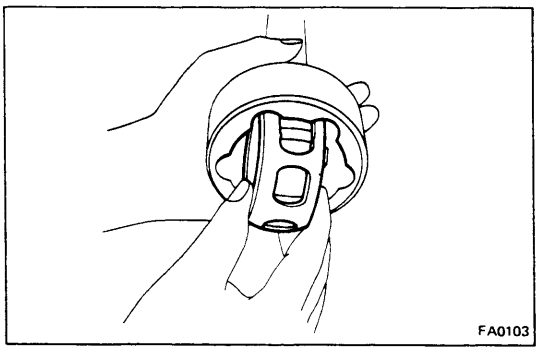

(d) Fit the two large openings in the cage against the protruding parts of the outer shaft, and pull out the cage and inner race.

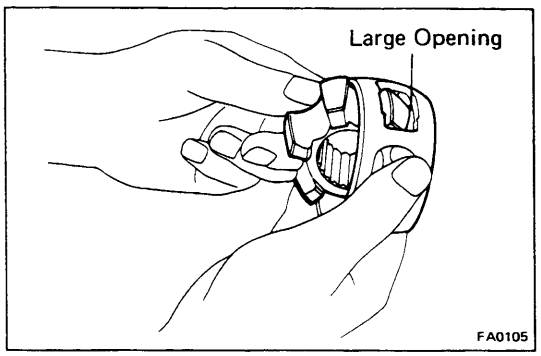

(e) Take out the inner race from the cage through the large opening.

(f) Clean and inspect the joint inner parts for wear or damage.

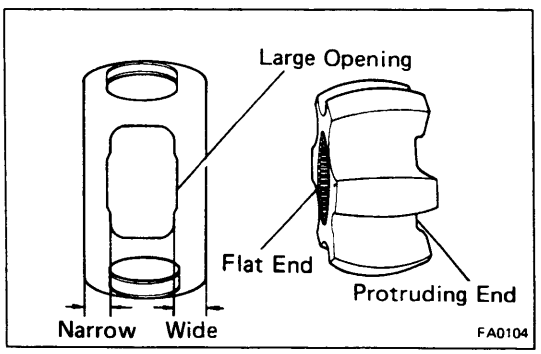

(g) Coat the joint inner parts and outer shaft inside with molybdenum disulplaide lithium base grease.

(h) Insert the inner race in the cage through the large opening.

(i) Position the protruding end the inner race toward the wide side of the cage.

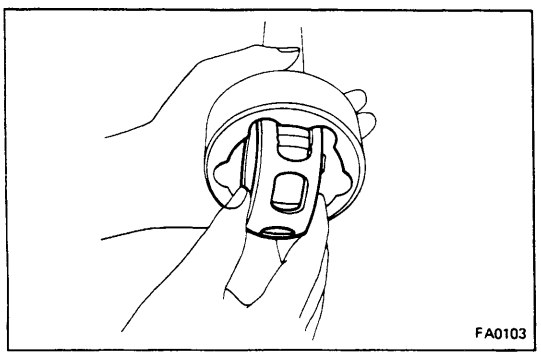

(j) Assemble the cage and inner race to the outer shaft by fitting the two large openings in the cage against the protruding parts of the outer shaft.

B02218

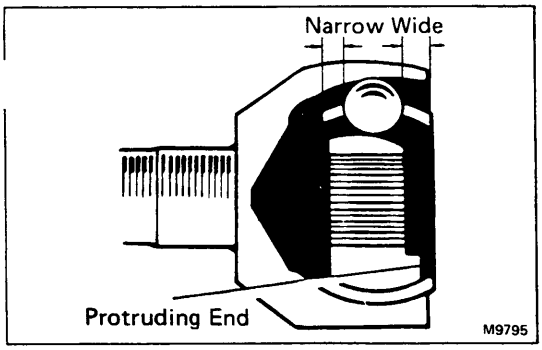

(k) Make sure to position the wide side of the cage and the inner race protruding end outward.

(l) Fit in the inner race and cage, and install the six bearing balls in the outer shaft. (See step (C))

(m) Pack molybdenum disulphide lithium base grease in the outer shaft.

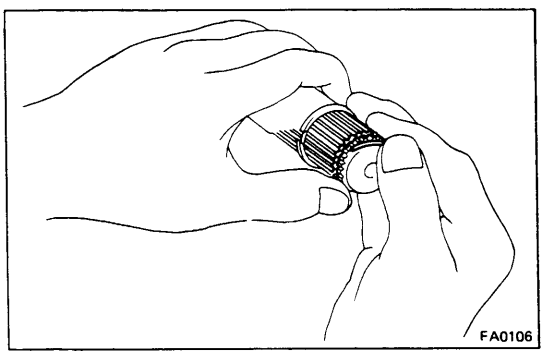

(n) Install the new snap rings on the inner shaft.

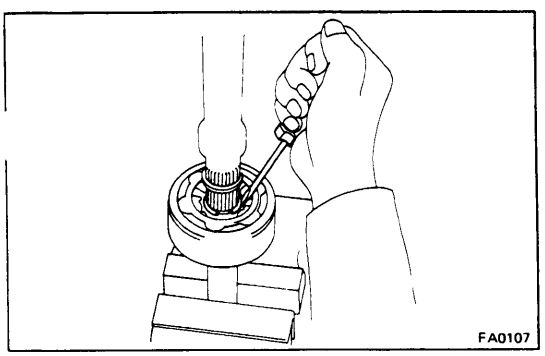

(o) Hold the outer shaft in a vise and, while compressing the snap inner ring, install the inner shaft to the outer shaft.

(p) Verify that the inner shaft cannot be pulled out.

B02219

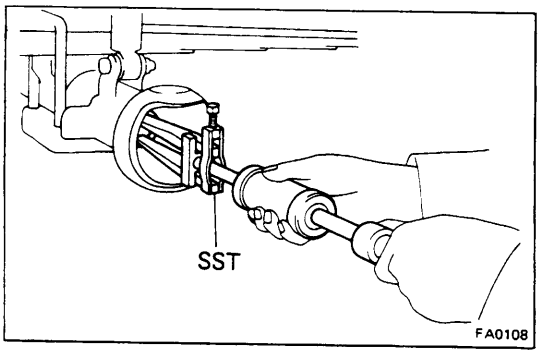

ADJUSTMENT OF STEERING KNUCKLE ALIGNMENT AND BEARING PRELOAD

NOTE: Whenever the axle housing or the steering knuckle is replaced, the steering knuckle alignment and knuckle bearing preload are to be adjusted with the SST.

SST 09634-60013

1. ADJUST BEARING PRELOAD

(a) Using SST, remove the oil seal.

SST 09308-00010

(b) Coat the knuckle bearings lightly with MP grease.

(c) Mount the SST on the housing with the bearings.

SST 09634-60013

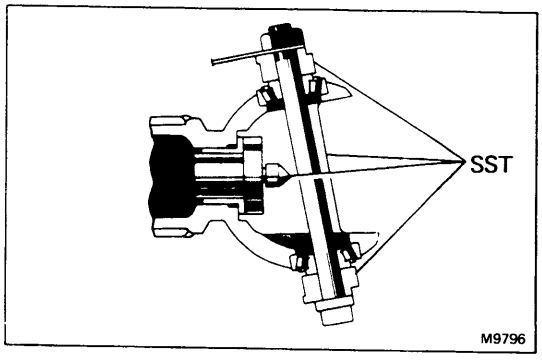

(d) Add preload to the bearings by tightening nut F.

Using a spring tension gauge, measure the preload.

Preload (rotating): 3.0 — 6.0 kg (6.6 — 13.2 lb, 29 — 59 N)

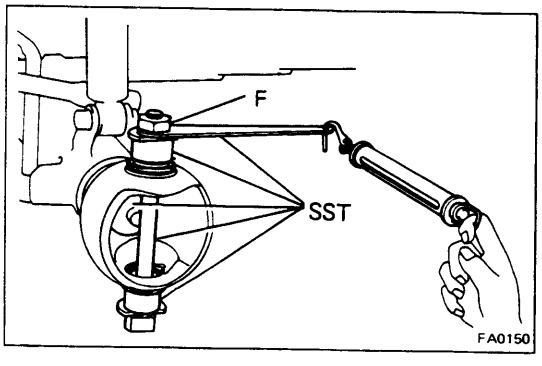

(e) Measure distance "A".

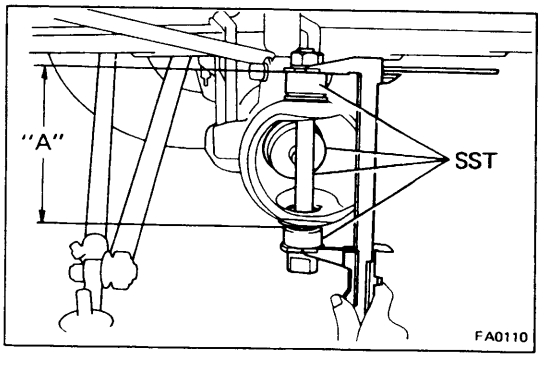

(f) Measure distance "B".

The difference between "A" and "B" is the total adjusting shim thickness that is required to maintain the correct bearing preload.

TOTAL SHIM THICKNESS "C"

"C" = "A" — "B"

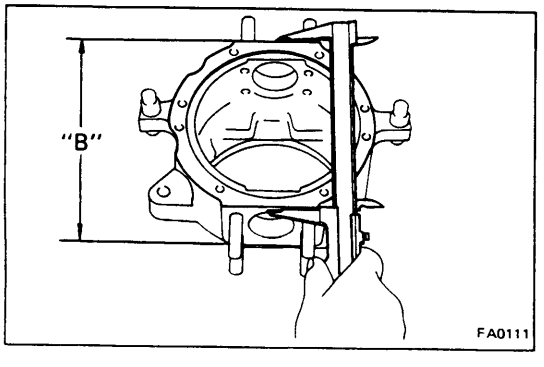

B02220

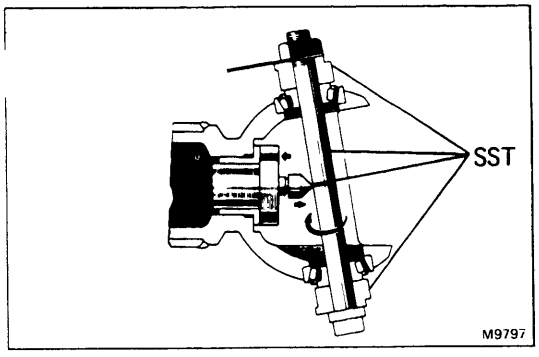

2. ADJUST STEERING KNUCKLE ALIGNMENT

(a) Apply a light coat of red lead on the center part of rod D.

(b) Press adapters A and B against the housing, press plug C against the rod D, and turn lever G so that a line will be scribed on rod D.

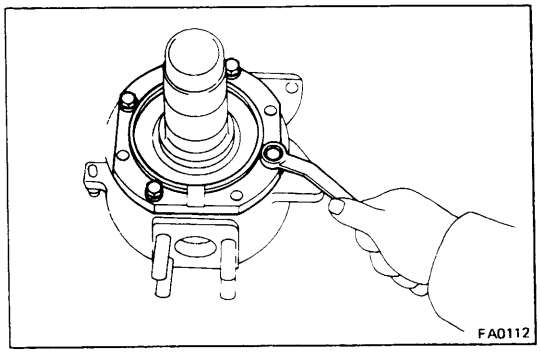

(c) Temporarily install the spindle to the knuckle. Tighten the bolt with two washers.

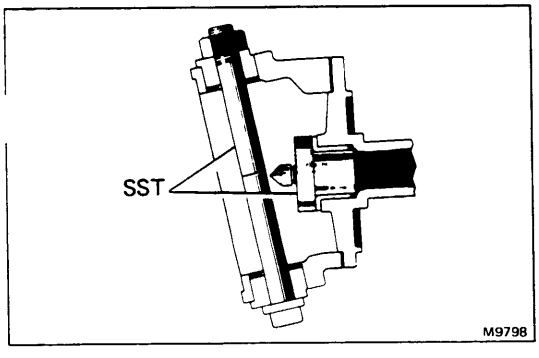

(d) Dismount the SST from the housing , and mount it on the knuckle.

SST 09634-60013

NOTE: Use care not to erase the scribed line when dismounting and remounting the SST.

Make sure that rod D is in the same vertical direction that it was when mounted on the housing.

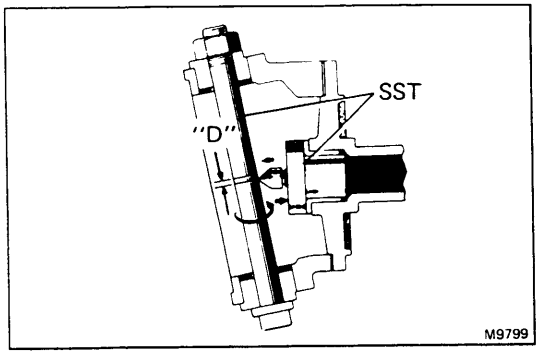

(e) Turn rod D and scribe another line on it.
Measure distance "D" between the two scribed lines.

The thickness of the steering knuckle lower bearing shim "E" will be the distance "D" less 3 mm (0.12 in.).

LOWER SHIM THICKNESS "E"

"E" = "D" − 3 mm

The thickness of the steering knuckle upper bearing shim "F" will be the difference between the total adjusting shim thickness "C" and shim thickness "E".

UPPER SHIM THICKNESS "F"

"F" = "C" − "E"

NOTE: Compare "E" and "F" with the thicknesses of the shims removed at disassembly. If there is considerable difference, remeasure "E" and "F".

Adjusting shim thickness mm (in.)

Thickness
0.1 (0.004)
0.2 (0.008)
0.5 (0.020)
1.0 (0.039)

B02221

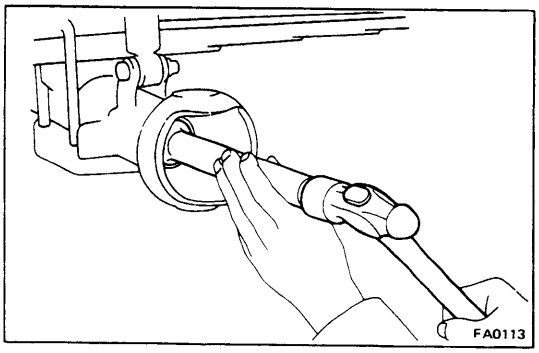

ASSEMBLY OF STEERING KNUCKLE AND AXLE SHAFT

(See page FA-48)

1. INSTALL OIL SEAL TO AXLE HOUSING

Using SST, drive the oil seal into the axle housing.

SST 09618-60010

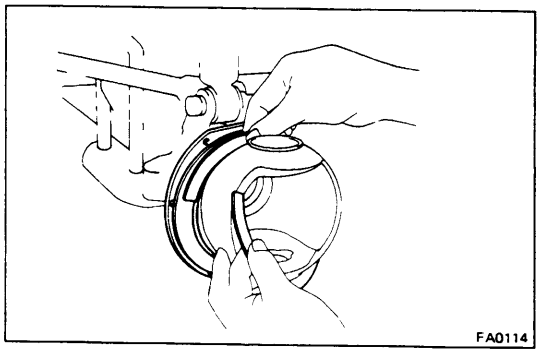

2. INSTALL OIL SEAL SET

Install the parts in the following order:

(a) Felt dust seal

(b) Rubber seal

(c) Steel ring

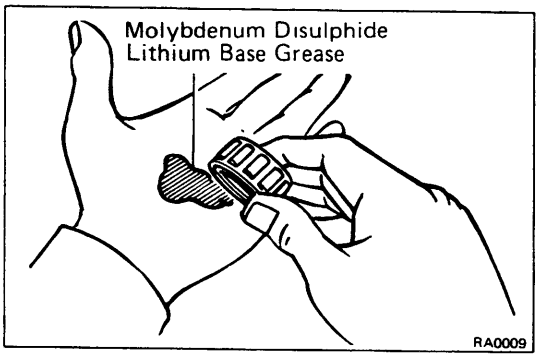

3. PACK BEARINGS WITH MP GREASE

(a) Place Molybdenum disulphide lithium base grease in the palm of your hand.

(b) Pack grease into the bearing, continuing until th grease oozes out from the other side.

(c) Do the same around the bearing circumference.

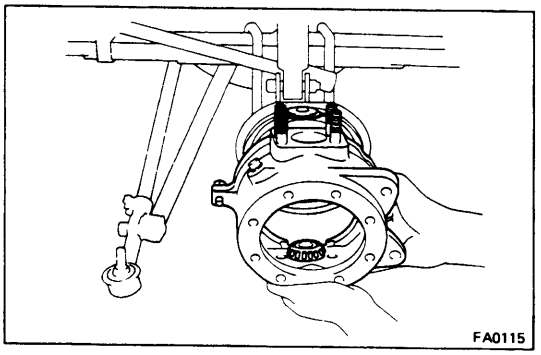

4. INSTALL STEERING KNUCKLE AND BEARINGS

(a) Place the bearings in positions on the knuckle and axle housing.

(b) Insert the knuckle on the axle housing.

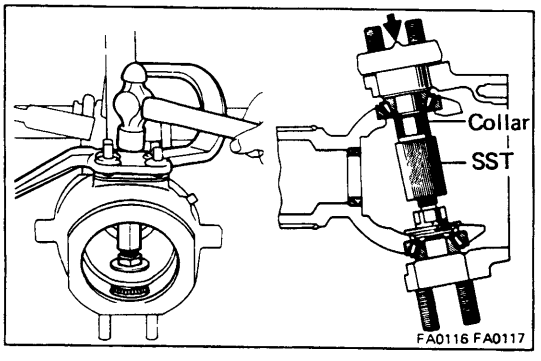

5. INSTALL KNUCKLE ARM AND BEARING CAP

(a) Using SST, support the upper bearing inner race.

SST 09606-60020

NOTE: Use SST with a collar.

(b) Install the knuckle arm over the shims that were ori nally used or were selected as described in adjustme operations.

(c) Using a hammer, tap the knuckle arm into the bearing inner race.

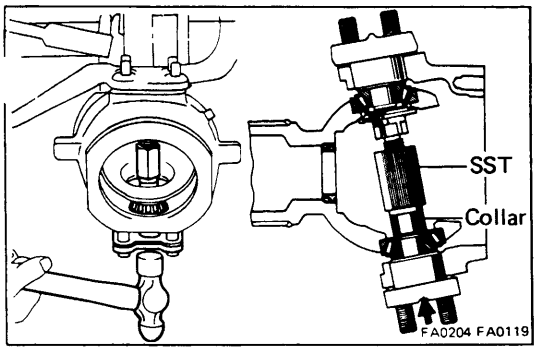

(d) Using SST, support the lower bearing inner race.

SST 09606-60020

NOTE: Use SST with a collar.

(e) Install the bearing cap over the shims that were originally used or were selected as described in adjustment operations.

(f) Using a hammer, tap the bearing cap into the bearing inner race.

(g) Remove SST from the knuckle.

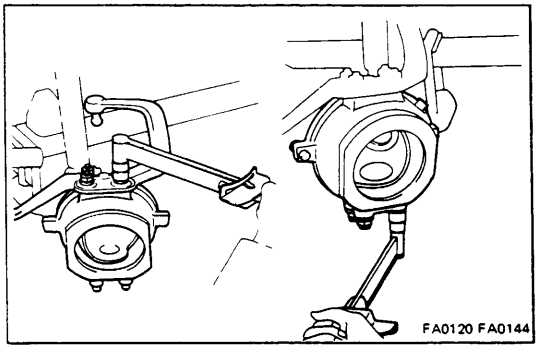

(h) Install the cone washers to the knuckle arm and torque the nuts.

Torque: 975 kg-cm (71 ft-lb, 96 N·m)

(i) Install and torque the bearing cap mounting nuts.

Torque: 975 kg-cm (71 ft-lb, 96 N·m)

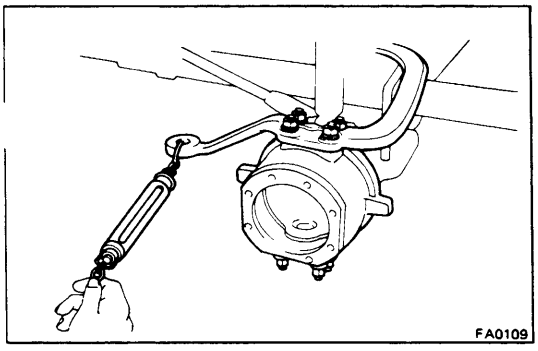

6. MEASURE BEARING PRELOAD

Using a spring tension gauge, measure the preload.

Preload (rotating): 3.0 — 6.0 kg (6.6 — 13.2 lb, 29 — 59N)

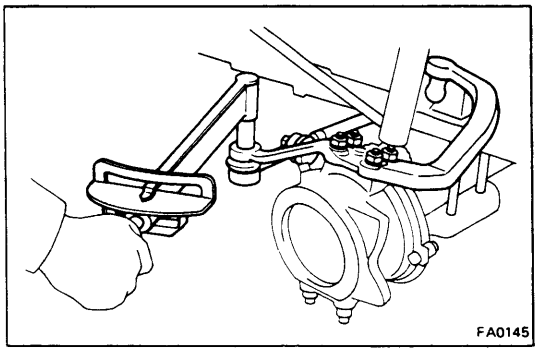

7. CONNECT TIE ROD TO KNUCKLE ARM

Torque the castle nut and secure it with a cotter pin.

Torque: 930 kg-cm (67 ft-lb, 91 N·m)

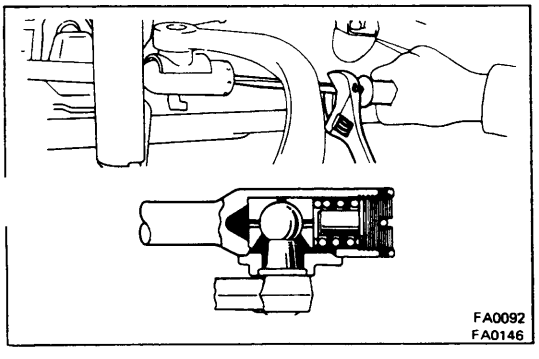

8. CONNECT DRAG LINK TO KNUCKLE ARM

(a) Insert the drag link on the knuckle arm.

(b) Install the ball stud seat, spring, spring seat and plug in the drag link end.

(c) Torque the plug completely and then loosen 1-1/3 turns.

(d) Secure the plug with a cotter pin.

B02223

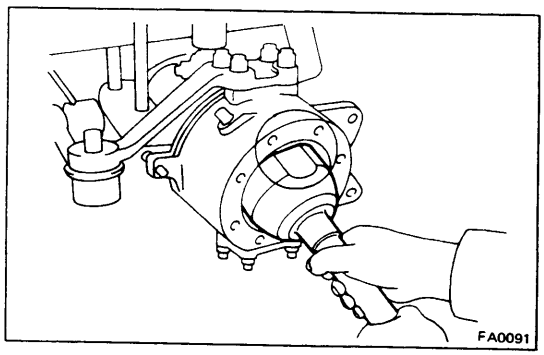

9. INSTALL OIL SEAL SET RETAINER TO KNUCKLE

10. INSTALL AXLE SHAFT

Position one flat part of the outer shaft upward, and install the shaft.

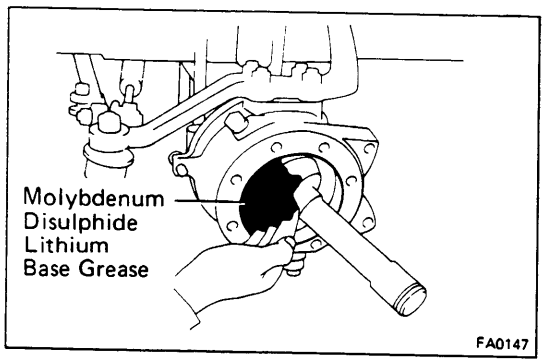

11. PACK MOLYBDENUM DISULPHIDE LITHIUM BASE GREASE IN KNUCKLE

Pack Molybdenum disulphide lithium base grease into the knuckle to about three fourths of the knuckle volume.

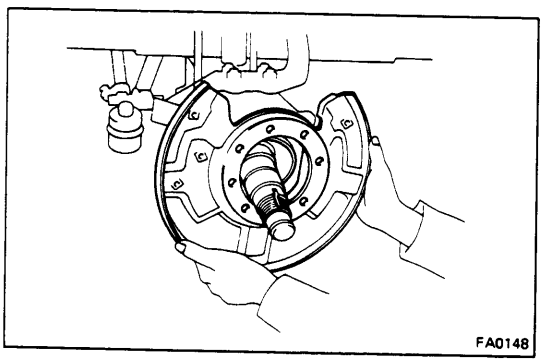

12. INSTALL KNUCKLE SPINDLE, DUST COVER AND DUST SEAL WITH NEW GASKETS

(a) Place the gasket in position on the knuckle and install the spindle.

(b) Place the dust cover, gasket and dust seal on the spindle.

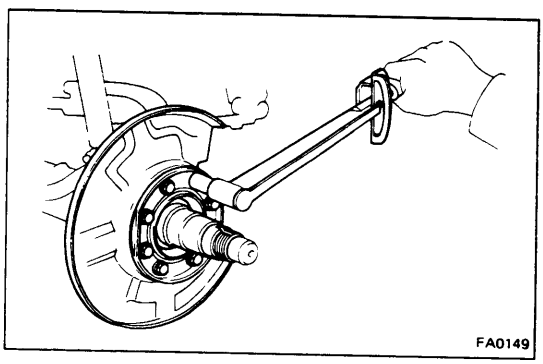

(c) Torque the spindle mounting bolts.

Torque: 530 kg-cm (38 ft-lb, 52 N·m)

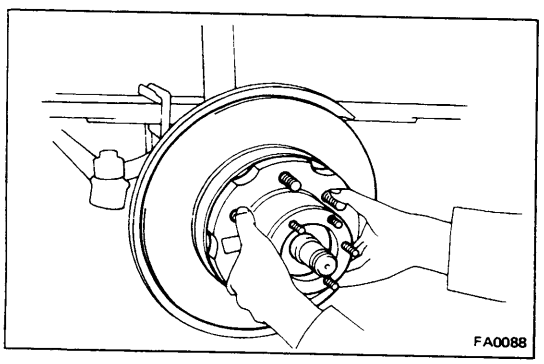

13. INSTALL AXLE HUB (See page FA-45)

B02224

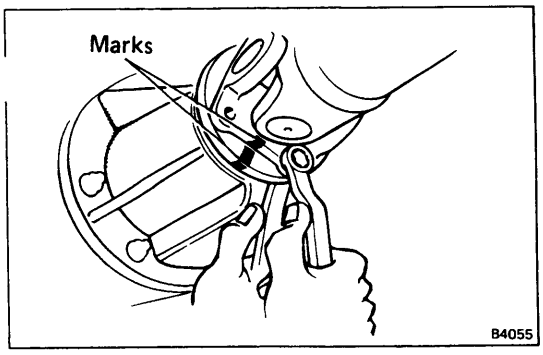

FRONT DIFFERENTIAL (4WD)

REMOVAL OF DIFFERENTIAL

(See page RA-7)

1. **REMOVE DRAIN PLUG AND DRAIN DIFFERENTIAL OIL**
2. **REMOVE FRONT AXLE SHAFT (See page FA-49)**
3. **DISCONNECT PROPELLER SHAFT FROM DIFFERENTIAL (See page RA-6)**
4. **REMOVE DIFFERENTIAL CARRIER ASSEMBLY**

DISASSEMBLY OF DIFFERENTIAL

(See page RA-8)

INSTALLATION OF DIFFERENTIAL

(See page RA-19)

1. **INSTALL A NEW GASKET**
2. **INSTALL DIFFERENTIAL CARRIER ASSEMBLY**

   Install the differential carrier assembly in the axle and install the ten nuts.

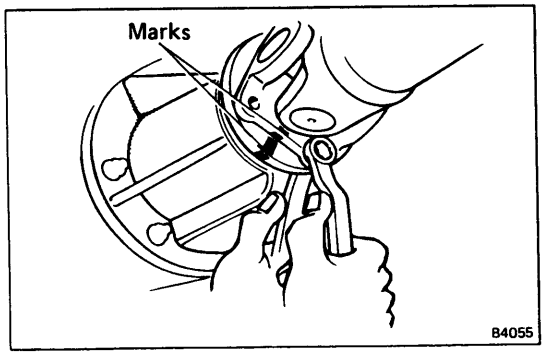

3. **CONNECT PROPELLER SHAFT FLANGE TO COMPANION FLANGE**

   (a) Align the marks on the flanges and connect the flanges with four bolts and nuts.

   (b) Torque the bolts and nuts.

   Torque: 750 Kg-cm (54 ft-lb, 74 N·m)

4. **INSTALL FRONT AXLE SHAFT (See page FA-56)**

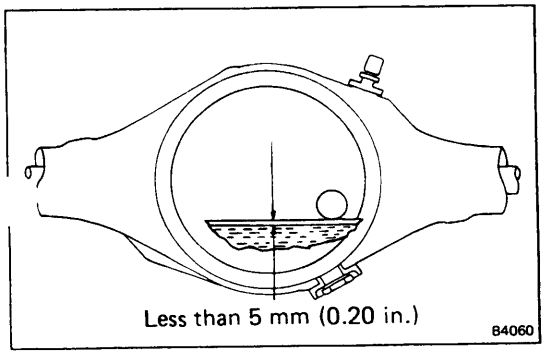

5. **INSTALL DRAIN PLUG AND FILL DIFFERENTIAL WITH GEAR OIL**

   Differential oil:
   API GL-5 hypoid gear oil
   SAE 90 above — 18°C (0°F)
   SAE 80W or 80W-90 below — 18°C (0°F)

   Capacity: 2.3 liters (2.4 US qts, 2.0 Imp. qts)

   Install a filler plug.

FRONT SUSPENTION (4WD)

COMPONENTS

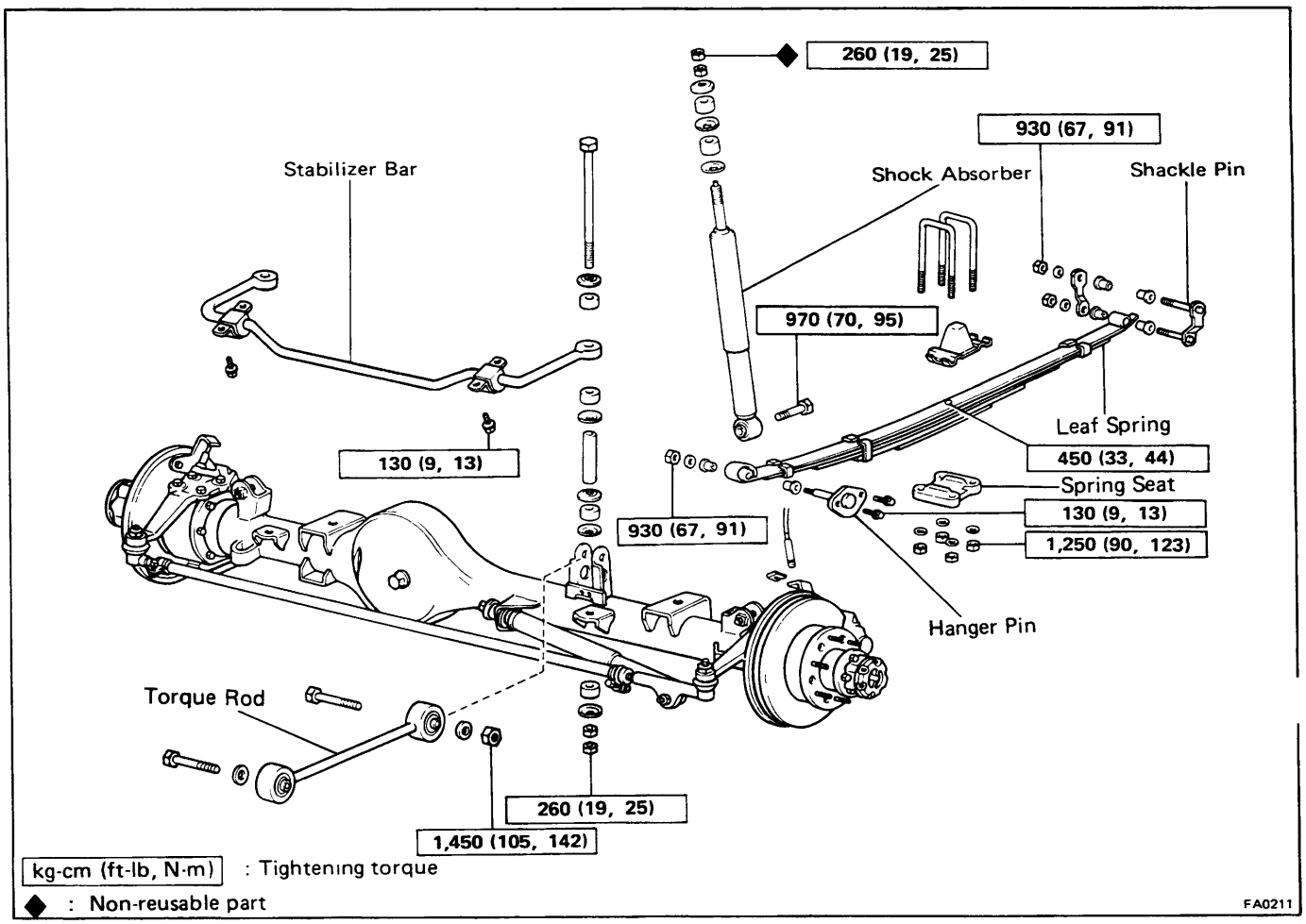

Leaf Spring and Shock Absorber

REMOVAL OF LEAF SPRING AND SHOCK ABSORBER

1. JACK UP AND SUPPORT BODY

(a) Jack up and support the body on the stands.

(b) Lower the axle housing until the leaf spring tension is free, and keep it at this position.

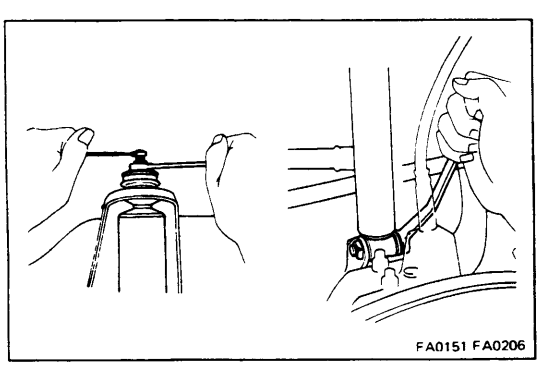

2. REMOVE SHOCK ABSORBER

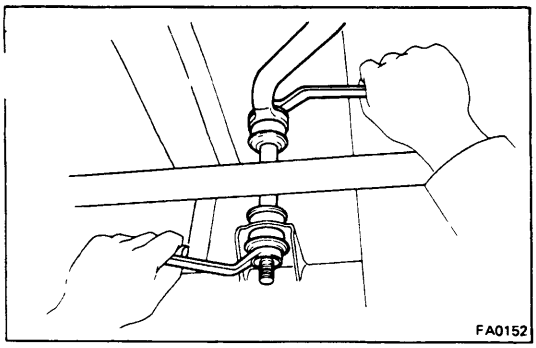

3. DISCONNECT STABILIZER BAR FROM AXLE HOUSING

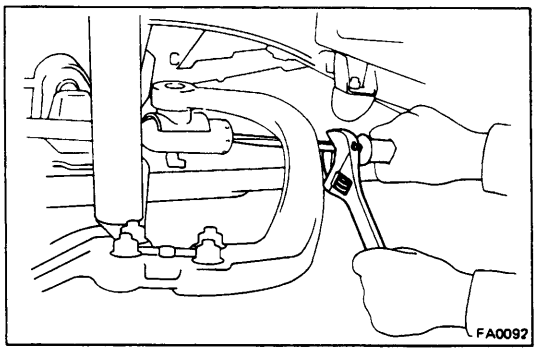

4. DISCONNECT DRAG LINK FROM KNUCKLE ARM

(a) Remove the cotter pin.
(b) Using a screwdriver, remove the plug.
(c) Disconnect the drag link from the knuckle arm.

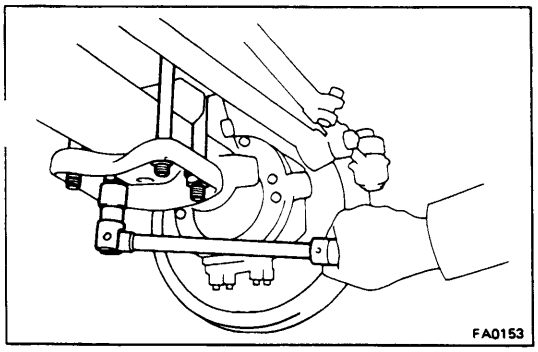

5. REMOVE U-BOLTS

(a) Remove the U-bolt mounting nuts.
(b) Remove the spring lower seat.
(c) Remove the U-bolt.
(d) Remove the spring bumper.

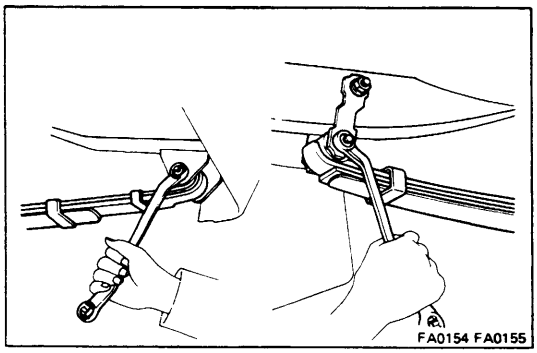

6. REMOVE LEAF SPRING

(a) Remove the hanger pin mounting nut.
(b) Remove the shackle pin mounting nut.
(c) Remove the hanger pin.
(d) Remove the shackle pin.
(e) Remove the leaf spring.

REPLACEMENT OF LEAF SPRING

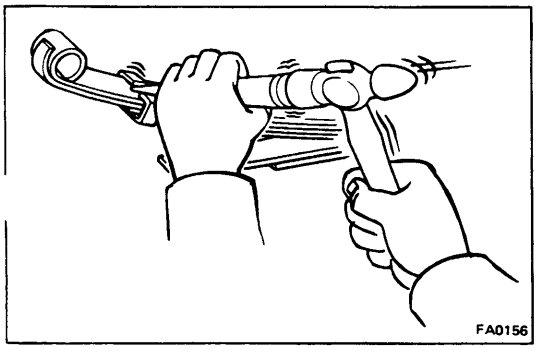

1. BEND OPEN SPRING CLIP

Using a chisel, pry up the spring clip.

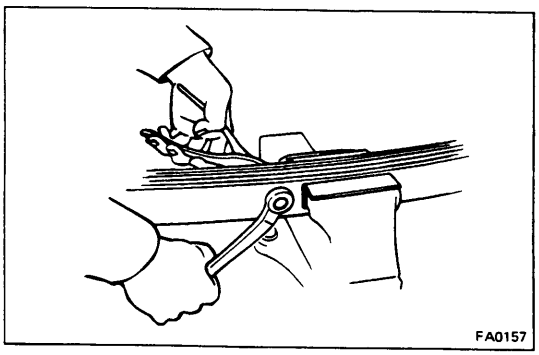

2. REMOVE CENTER BOLT

Hold the spring near the center bolt in a vise and remo the center bolt.

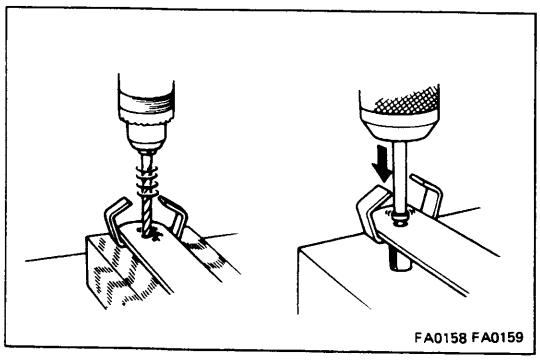

3. IF NECESSARY, REPLACE SPRING CLIP

(a) Drill off the head of the rivet, and drive it out.

(b) Install a new rivet into the holes of the spring leaf and clip. Then rivet with a press.

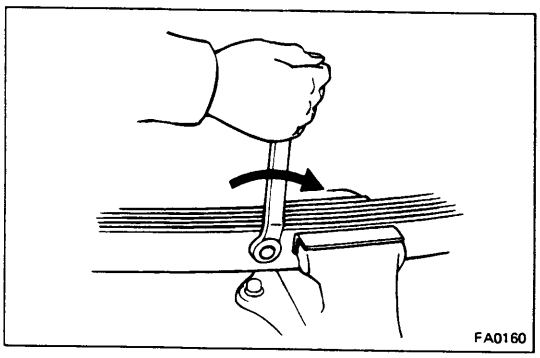

4. INSTALL SPRING CENTER BOLT

(a) Attach the spring silencer.

(b) Align the leaf holes and secure the leaves with a vis

(c) Install and tighten the spring center bolt.

Torque: 450 kg-cm (33 ft-lb, 44 N·m)

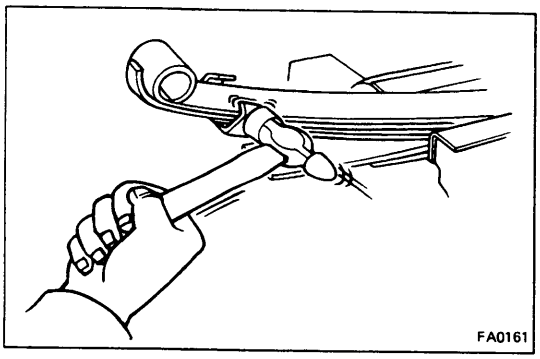

5. BEND SPRING CLIP

Using a hammer, bend the spring clip into position.

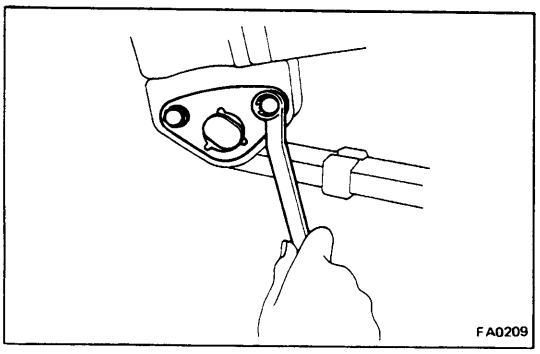

INSTALLATION OF LEAF SPRING

(See page FA-60)

1. INSTALL LEAF SPRING

(a) Insert the bushings into the frame and into both ends of the leaf spring.

(b) Place the leaf spring in position.

(c) Install the hanger pin and tighten the bolt.

Torque: 130 kg-cm (9 ft-lb, 13 N·m)

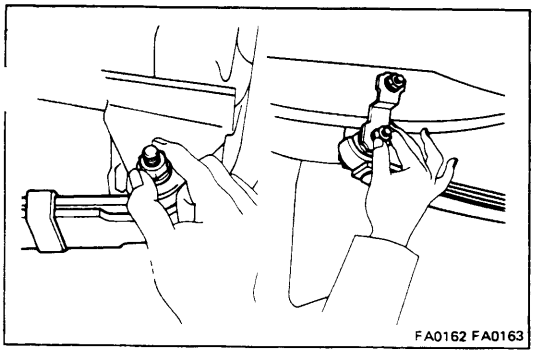
FA0162 FA0163

(d) Finger tighten the hanger pin nut.

(e) Install the shackle pin.

(f) Install the plate and finger tighten the nuts.

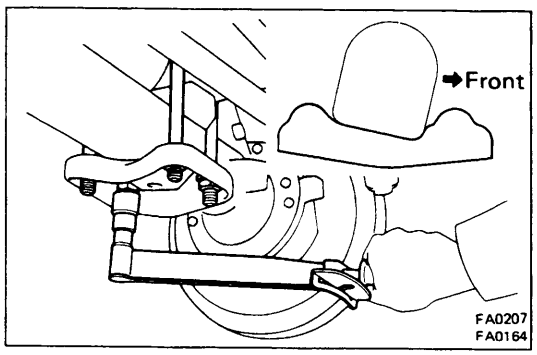

FA0207
FA0164

2. INSTALL U-BOLTS

(a) Install the spring bumper and U-bolts onto the leaf spring.

(b) Install the spring seat and nuts.

NOTE: Be careful of the installation direction of the LH spring seat.

(c) Tighten the U-bolt mounting nuts.

Torque: 1,250 kg-cm (90 ft-lb, 123 N·m)

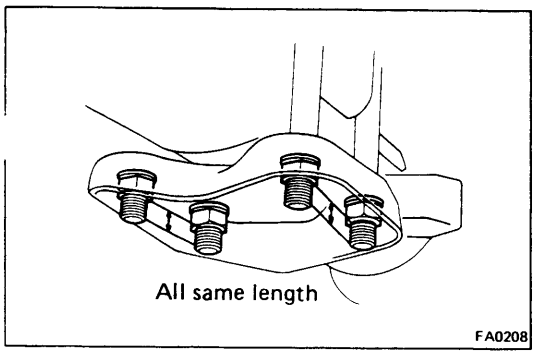

FA0208

NOTE: Tighten the U-bolts, so that the length of all the U-bolts under the spring seat are the same.

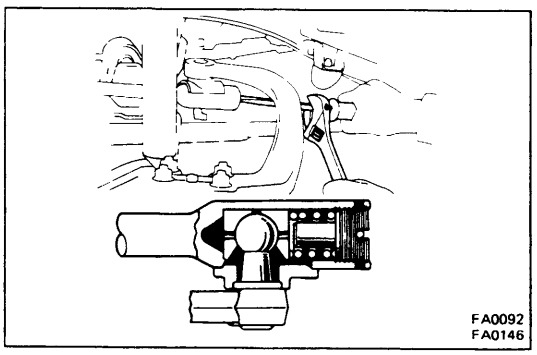
FA0092
FA0146

3. CONNECT DRAG LINK TO KNUCKLE ARM
(See page SR-78)

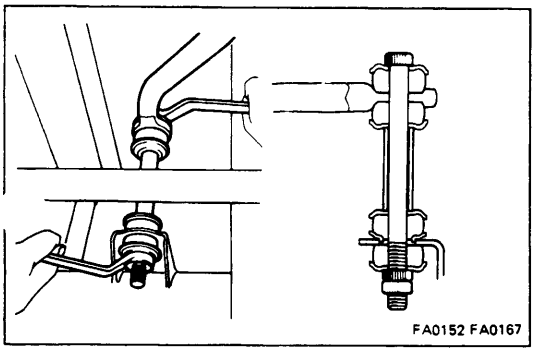
FA0152 FA0167

4. CONNECT STABILIZER BAR TO AXLE HOUSING

Tighten the mounting nuts.

Torque: 260 kg-cm (19 ft-lb, 25 N·m)

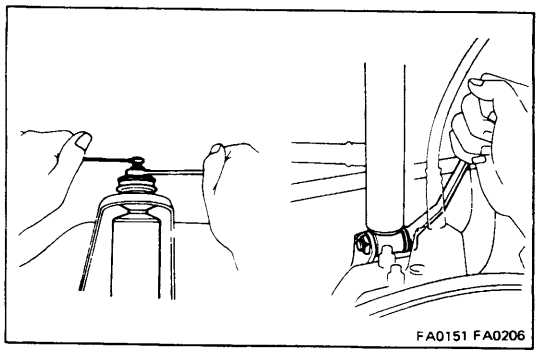

5. INSTALL SHOCK ABSORBER

(a) Position the shock absorber and install the bushings retainers and nut.

Torque: 260 kg-cm (19 ft-lb, 25 N·m)

(b) Install the lower mounting bolt.

Torque: 970 kg-cm (70 ft-lb, 95 N·m)

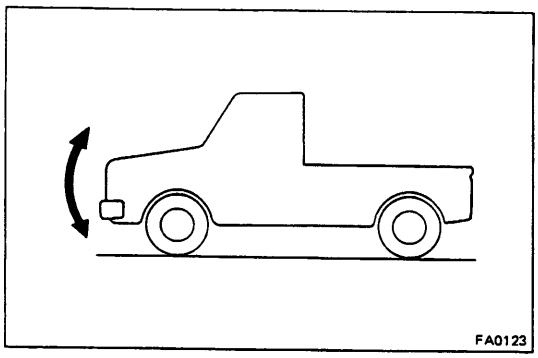

6. STABILIZE SUSPENSION

Remove the stands and bounce the car to stabilize the suspension.

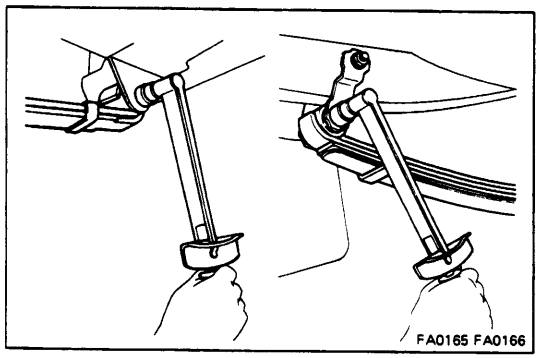

7. TIGHTEN HANGER PIN AND SHACKLE PIN

Tighten the hanger pin nut.

Torque: 930 kg-cm (67 ft-lb, 91 N·m)

Tighten the shackle pin nut.

Torque: 930 kg-cm (67 ft-lb, 91 N·m)

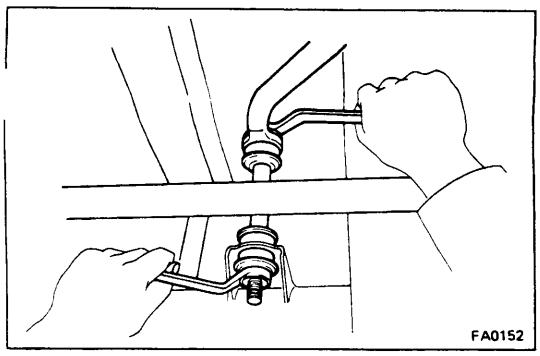

Stabilizer Bar

REMOVAL OF STABILIZER BAR

(See page FA-60)

1. **DISCONNECT STABILIZER BAR FROM FRONT AXLE HOUSING**

   Remove the nuts, cushions and bolts holding both sides of the stabilizer bar to the axle housing.

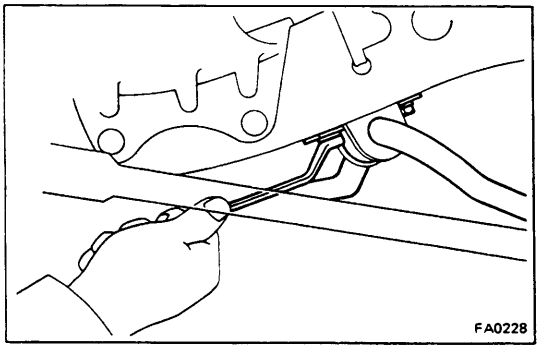

2. **DISCONNECT STABILIZER BAR FROM FRAME**

   Remove both stabilizer bar brackets from the frame, and remove the stabilizer bar.

INSTALLATION OF STABILIZER BAR

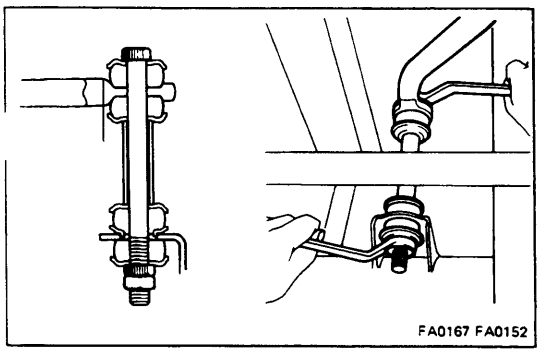

1. **PLACE STABILIZER BAR**

   Place the stabilizer bar in position and install both stabilizer bar bushings and brackets to the frame.
   Finger tighten the bolts.

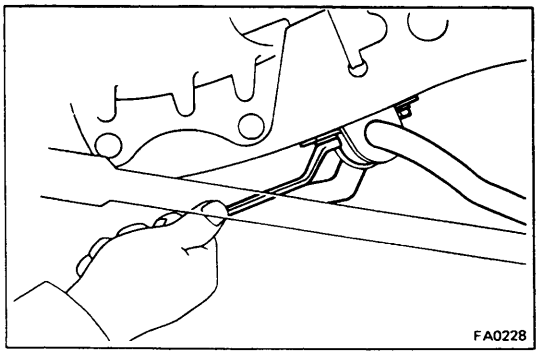

2. **CONNECT STABILIZER BAR TO AXLE HOUSING**

   Connect the stabilizer bar on both sides to the axle housing with bolts.

   Cushions and nuts as shown.

   Torque: 260 kg-cm (19 ft-lb, 25 N·m)

3. **TORQUE BRACKET SET BOLTS**

   Torque: 130 kg-cm (9 ft-lb, 13 N·m)

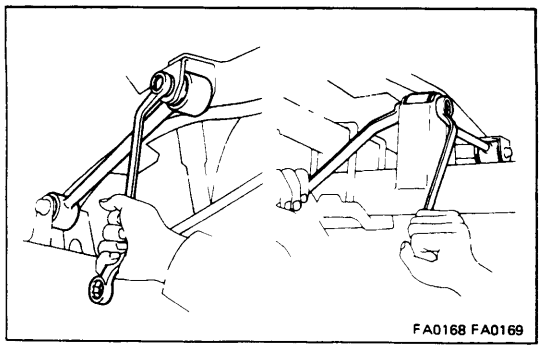
FA0168 FA0169

Torque Rod

REMOVAL OF TORQUE ROD

(See page FA-60)

1. DISCONNECT TORQUE ROD FROM AXLE HOUSING
2. DISCONNECT TORQUE ROD FROM FRAME

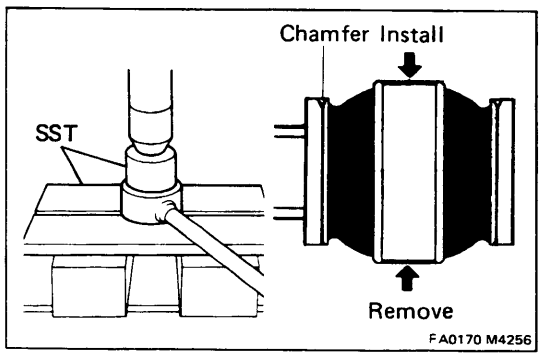

FA0170 M4256

REPLACEMENT OF TORQUE ROD BUSHING

1. REMOVE BUSHING

   Using SST, press out the bushing

   SST 09726-35010 and 09527-10010

   NOTE: When inserting and removing the bushing, press or pull from the chamfered side as shown in the figure.

2. INSTALL BUSHING

   Using SST, press in the new bushing

   NOTE: Do not use a lubricant when pressing in the bushing.

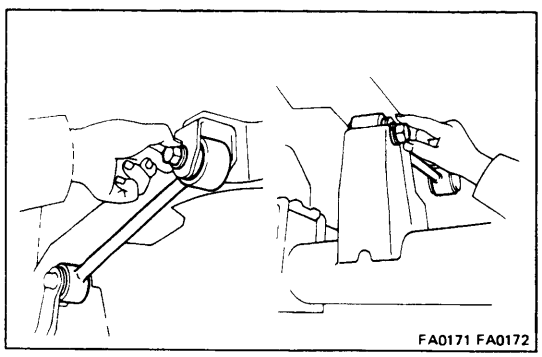
FA0171 FA0172

INSTALLATION OF TORQUE ROD

(See page FA-60)

1. INSTALL TORQUE ROD

   Finger tighten the mounting bolts.

2. STABILIZE SUSPENSION

   Bounce the car to stabilize the suspension.

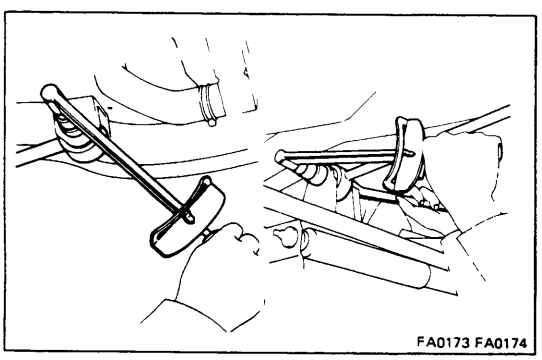
FA0173 FA0174

3. TIGHTEN TORQUE ROD MOUNTING BOLTS

   Torque: 1,450 kg-cm (105 ft-lb, 142 N·m)

REAR AXLE AND SUSPENSION

	Page
TROUBLESHOOTING	RA-2
REAR AXLE SHAFT	RA-3
DIFFERENTIAL	RA-6
LEAF SPRING TYPE REAR SUSPENSION	RA-20
Leaf Spring and Shock Absorber	RA-20

TROUBLESHOOTING

Problem	Possible cause	Remedy	Page
Oil leak from rear axle	Oil seals worn or damaged	Replace oil seal	RA-3
	Bearing retainer loose	Replace retainer	RA-3
	Rear axle housing cracked	Repair as necessary	
Oil leak from pinion shaft	Oil level too high or wrong grade	Drain and replace oil	RA-7
	Oil seal worn or damaged	Replace oil seal	RA-6
	Companion flange loose or damaged	Tighten or replace flange	RA-6
Noises in rear axle	Oil level low or wrong grade	Drain and replace oil	
	Excessive backlash between pinion and ring or side gear	Check backlash	RA-8
	Ring, pinion or side gears worn or chipped	Inspect gears	RA-8
	Pinion shaft bearing worn	Replace bearing	RA-9
	Axle shaft bearing worn	Replace bearing	RA-3
	Differential bearing loose or worn	Tighten or replace bearings	RA-10
Bottoming	Vehicle overloaded	Check loading	
	Shock absorber worn out	Replace shock absorber	RA-20
	Springs weak	Replace spring	RA-20

A01289

REAR AXLE SHAFT

COMPONENTS

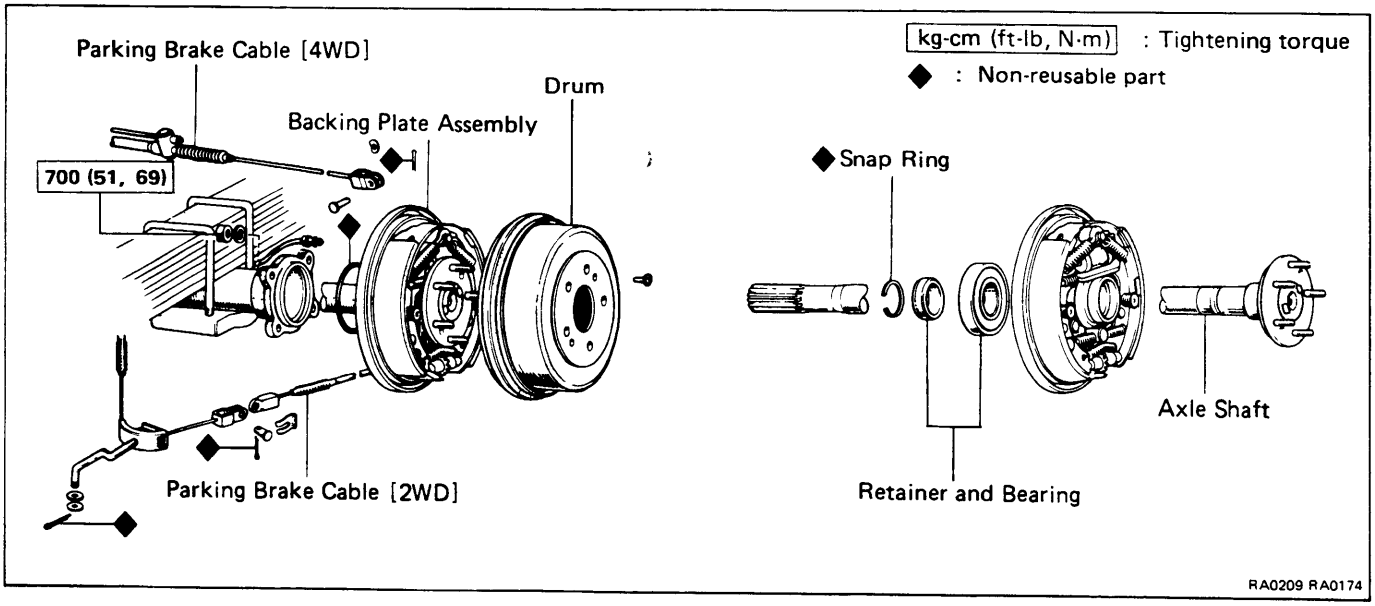

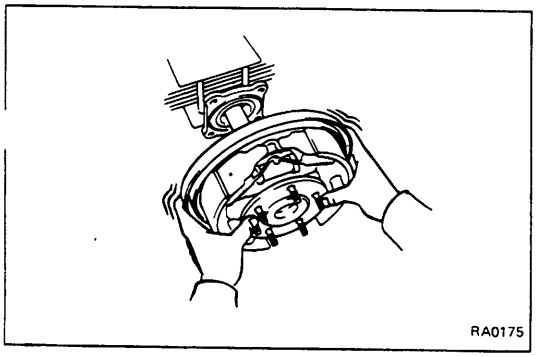

REMOVAL OF REAR AXLE SHAFT

1. **REMOVE WHEEL AND BRAKE DRUM**
2. **DISCONNECT BRAKE TUBE AND PARKING BRAKE CABLE**
3. **REMOVE FOUR BACKING PLATE MOUTING NUTS**
4. **REMOVE SNAP RING**

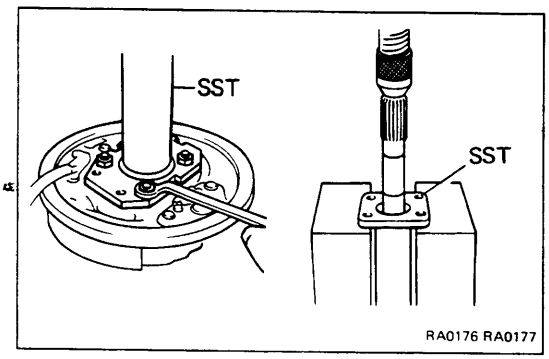

5. **REMOVE REAR AXLE SHAFT FROM BACKING PLATE**
   (a) Attach SST to the backing plate.
   SST 09521-25011
   (b) Press out the rear axle shaft from the backing plate.
   CAUTION: When pulling out the rear axie, be careful not to damage the oil seal.

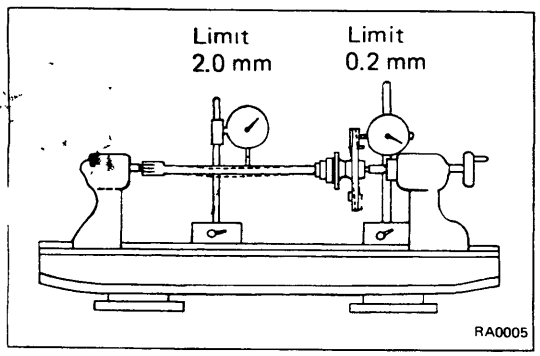

INSPECTION AND REPAIR OF REAR AXLE SHAFT COMPONENTS

1. **INSPECT REAR AXLE SHAFT AND FLANGE FOR WEAR, DAMAGE OR RUNOUT**
   Maximum shaft runout: 2.0 mm (0.079 in.)
   Maximum flange runout: 0.2 mm (0.008 in.)
   If the rear axle shaft or flange is damaged or worn, or if runout is greater than maximum, replace the rear axle shaft.

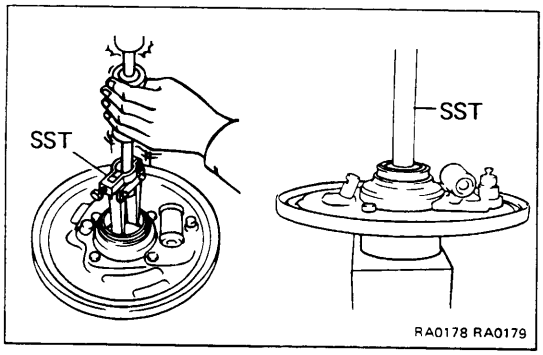

2. **INSPECT OUTER OIL SEAL**
   (a) Check for damage.
   (b) Check the oil seal lip for wear or damage.

3. **IF NECESSARY, REPLACE OUTER OIL SEAL**
   (a) Using SST, remove the oil seal.
   SST 09308-00010
   (b) Using SST, install a new oil seal.
   SST 09608-30011

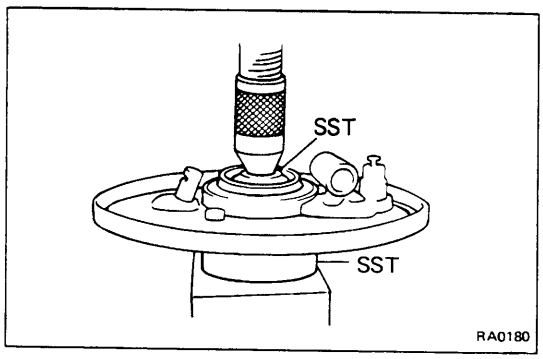

4. **INSPECT REAR AXLE BEARING**
   Check for wear or damage.

5. **IF NECESSARY, REPLACE REAR AXLE BEARING**
   (a) Remove the bearing oil seal.
   (b) Using SST, press out the bearing.
   SST 09228-44010 and 09608-30011

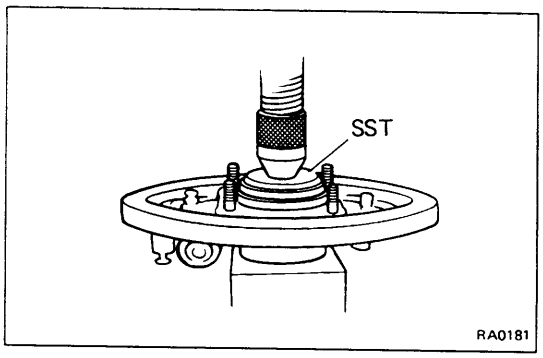

   (c) Using SST, press in a new bearing.
   SST 09515-30010 and 09608-35013
   (d) Install a new oil seal.

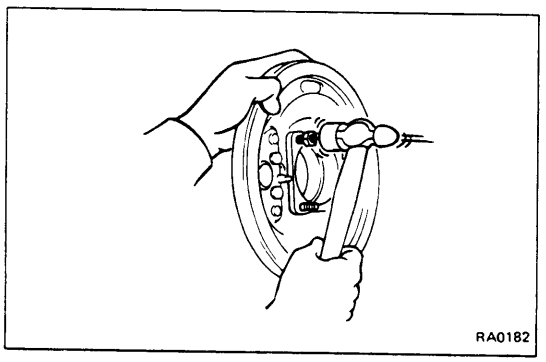

6. **INSPECT BEARING CASE**
   Check for wear or damage.

7. **IF NECESSARY, REPLACE BEARING CASE**
   (a) Remove the oil seal and bearing.
   (b) Install nuts to the serration bolts.
   (c) Using a hammer, tap out the serration bolts and remove the bearing case.

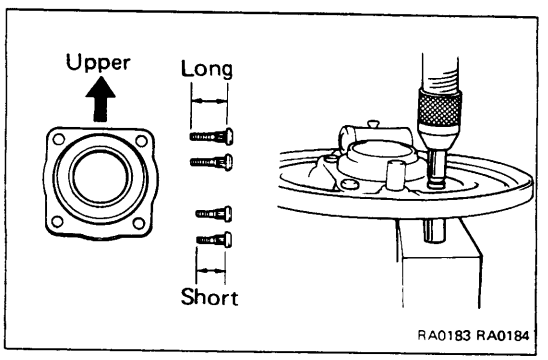

   (d) Position the backing plate on the new bearing case and, using two sockets, press in the serration bolts.
   NOTE: Position the flat side of the bearing case and the two long serration bolts at the upper side of the backing plate.
   (e) Install a new bearing and oil seal.

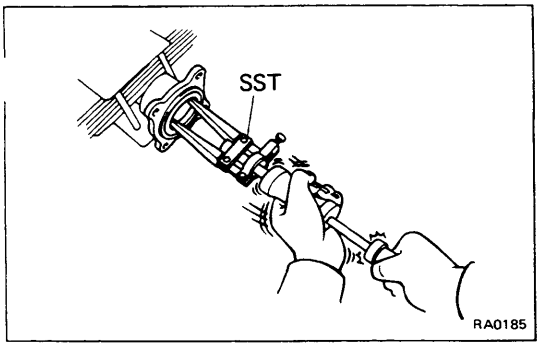

8. INSPECT OIL SEAL FOR WEAR OR DAMAGE

If the seal is damaged or worn, replace it.

9. IF NECESSARY, REPLACE OIL SEAL FROM AXLE HOUSING

(a) Using SST, remove the oil seal.

SST 09308-00010

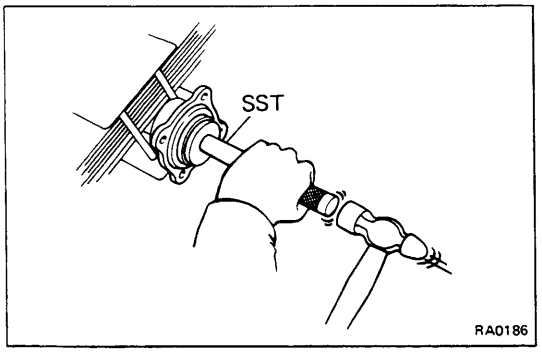

(b) Apply MP grease to the oil seal.

(c) Using SST, drive in a new oil seal.

SST 09608-30011

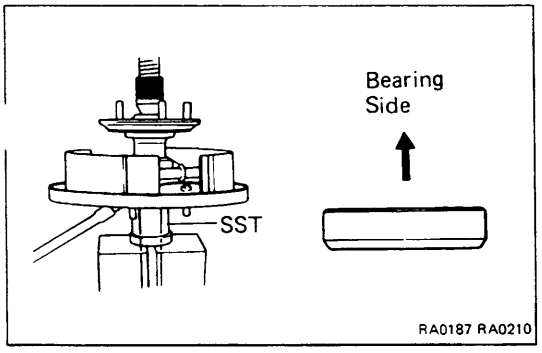

INSTALLATION OF REAR AXLE SHAFT

(See page RA-3)

1. INSTALL REAR AXLE SHAFT IN BACKING PLATE

(a) Apply MP grease to the oil seal.

(b) Insert the backing plate and bearing retainer on the rear axle shaft.

(c) Using SST, press the rear axle shaft into the backing plate.

SST 09515-30010

(d) Using snap ring pliers, install the snap ring.

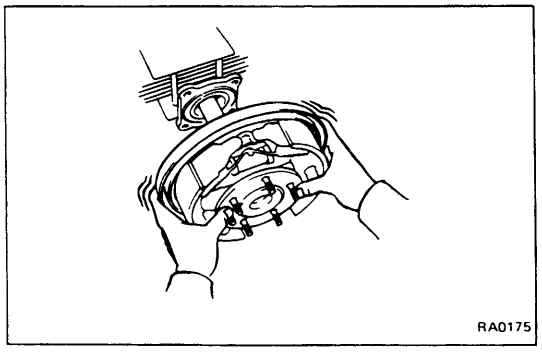

2. INSTALL REAR AXLE IN HOUSING

Install the rear axle with four nuts.

Torque: 700 kg-cm (51 ft-lb, 69 N·m)

NOTE:

- Be careful not to damage the oil seal.
- When inserting the axle shaft, be careful not to hit or deform the oil deflector inside the axle housing.

3. CONNECT BRAKE TUBE AND PARKING BRAKE CABLE

4. INSTALL BRAKE DRUM AND WHEEL

DIFFERENTIAL

COMPONENTS

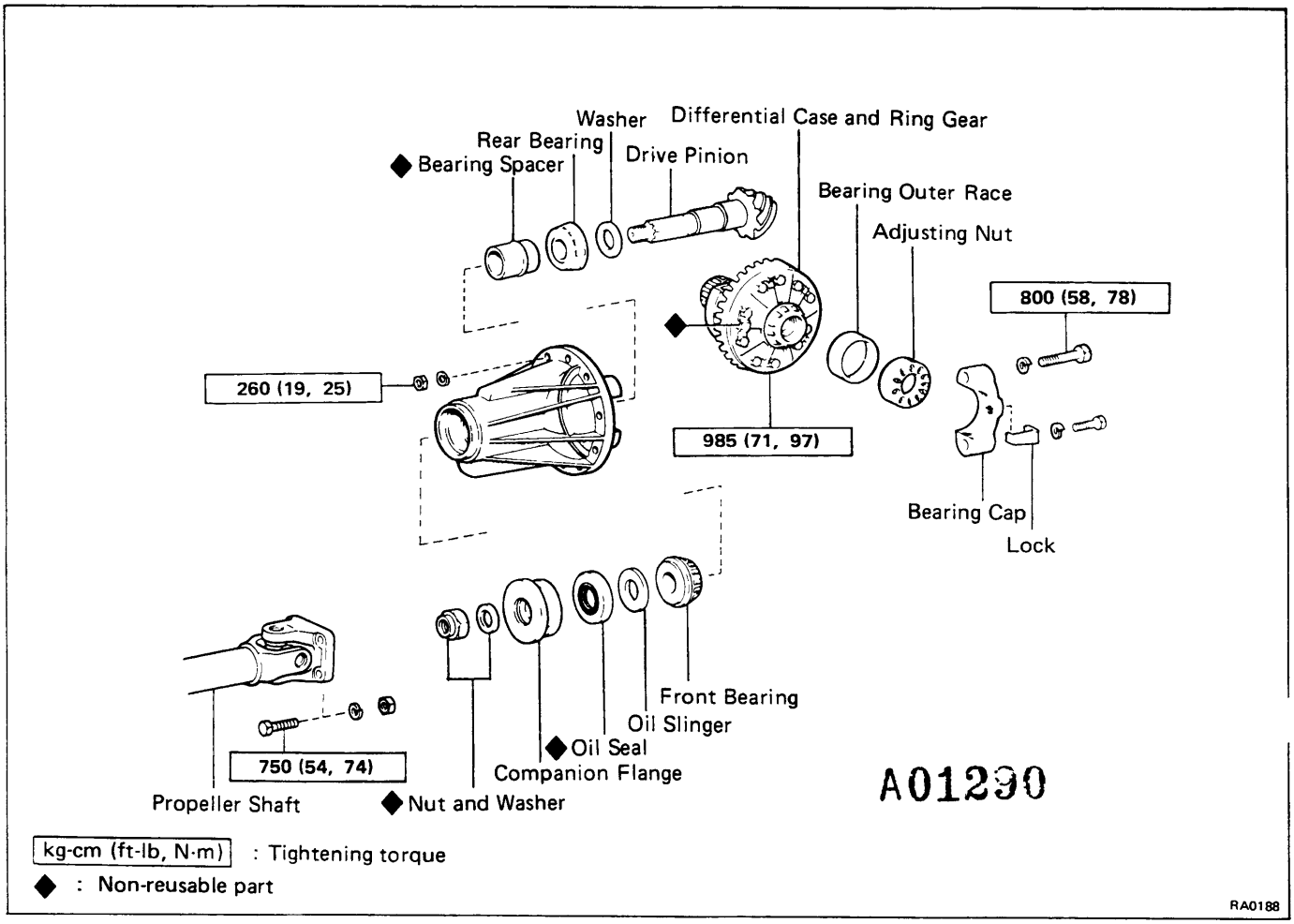

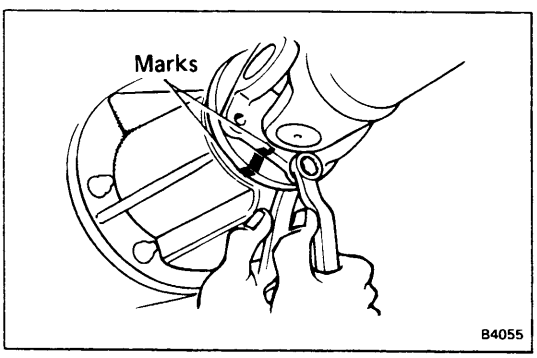

ON-VEHICLE REPLACEMENT OF OIL SEAL

1. **DISCONNECT PROPELLER SHAFT FROM DIFFERENTIAL**
   (a) Place alignment marks on the flanges.
   (b) Remove the four bolts and nuts.

2. **REMOVE COMPANION FLANGE**
   (See step 7 on page RA-9)

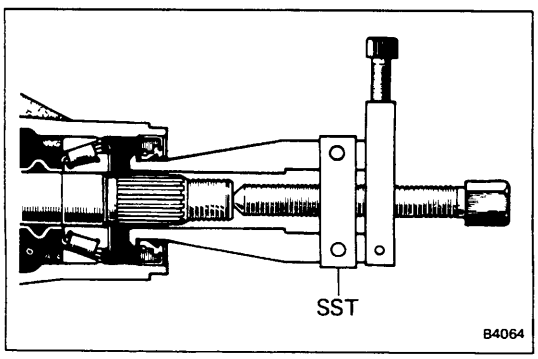

3. **REMOVE OIL SEAL AND OIL SLINGER**
   (a) Using SST, remove the oil seal from the housing.
   SST 09308-10010
   (b) Remove the oil slinger.

4. **REMOVE FRONT BEARING AND BEARING SPACER**
   (See step 9 on page RA-9)

5. **INSTALL NEW BEARING SPACER AND FRONT BEARING (See step 9 on page RA-17)**

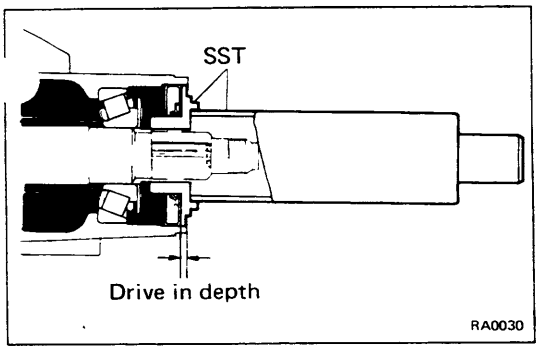

6. **INSTALL OIL SLINGER AND NEW OIL SEAL**
   (a) Install the oil slinger facing as shown.
   (b) Using SST, drive in a new oil seal as shown.
   SST 09554-30011
   Oil seal drive in depth:

1/2 ton	**1.5 mm (0.059 in.)**
1 ton, C&C and 4WD	**1.0 mm (0.039 in.)**

   (c) Apply MP grease to the oil seal lip.

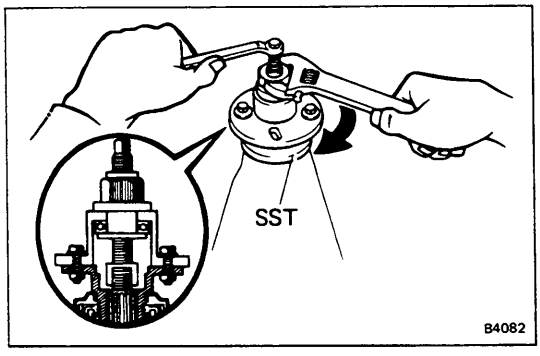

7. **INSTALL COMPANION FLANGE**
   (See step 11 on page RA-17)

8. **ADJUST FRONT BEARING PRELOAD**
   (See step 12 on page RA-18)

9. **STAKE DRIVE PINION NUT**

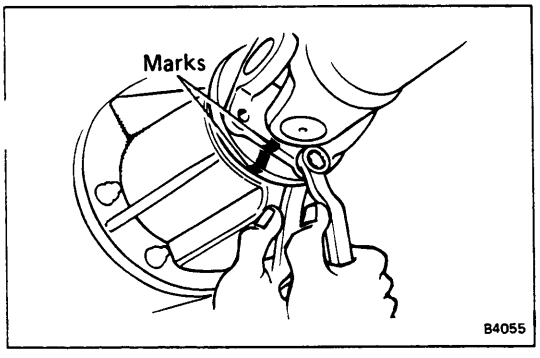

10. **CONNECT PROPELLER SHAFT FLANGE TO COMPANION FLANGE**
    (a) Aligh the marks on the flanges and connect the flanges with four bolts and nuts.
    (b) Torque the four bolts and nuts.
    Torque: 750 kg-cm (54 ft-lb, 74 N·m)

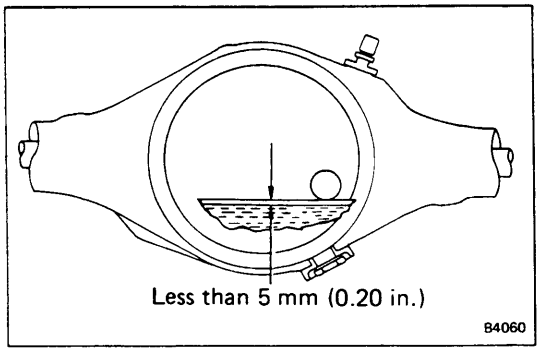

11. **CHECK DIFFERENTIAL OIL LEVEL**
    Fill with hypoid gear oil if necessary.

Hypoid gear oil:	**API GL-5**
	Above −18°C (0°F) SAE 90
	Below −18°C (0°F) SAE 80W or 80W-90

Capacity:	
1/2 ton	**1.7 liters (1.8 US qts, 1.5 Imp. qts)**
1 ton and C&C	**1.8 liters (1.9 US qts, 1.6 Imp. qts)**
4WD	**2.2 liters (2.3 US qts, 1.9 Imp. qts)**

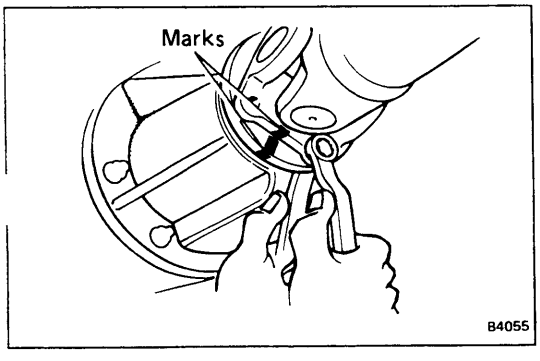

REMOVAL OF DIFFERENTIAL

(See page RA-6)

1. **REMOVE DRAIN PLUG AND DRAIN DIFFERENTIAL OIL**
2. **REMOVE REAR AXLE SHAFT (See page RA-3)**
3. **DISCONNECT PROPELLER SHAFT FROM DIFFERENTIAL (See page RA-6)**
4. **REMOVE DIFFERENTIAL CARRIER ASSEMBLY**

DISASSEMBLY OF DIFFERENTIAL

(See page RA-6)

NOTE: If the differential is noisy, perform the following pre-inspection before disassembly to determine the cause of the noise.

If the differential has severe problems, disassemble and repair it as necessary.

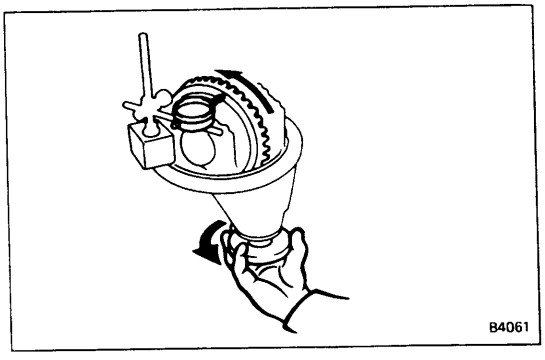

1. **CHECK RING GEAR RUNOUT**

If the runout is greater than maximum, install a new ring gear.

Maximum runout:

1/2 ton	0.07 mm (0.0028 in.)
1 ton, C&C and 4WD	0.10 mm (0.0039 in.)

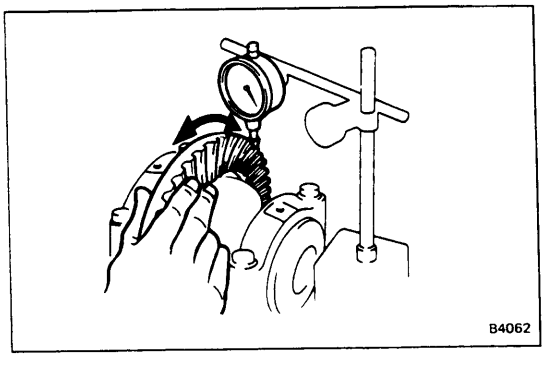

2. **CHECK RING GEAR BACKLASH**

If the backlash is not within specifications, adjust the side bearing preload or repair as necessary. (See step 5 on page RA-14)

Backlash: 0.13 — 0.18 mm (0.0051 — 0.0071 in.)

3. **INSPECT TOOTH CONTACT BETWEEN RING GEAR AND DRIVE PINION (See step 6 on page RA-16)**

Note the tooth contacting position.

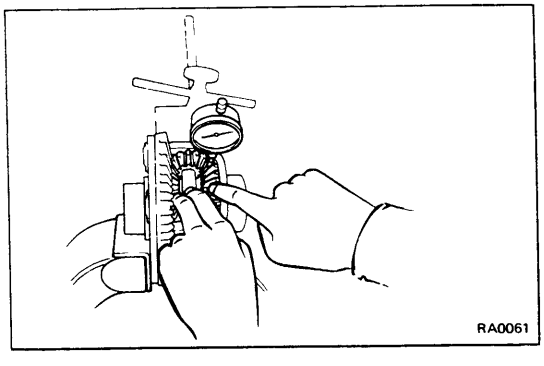

4. **CHECK SIDE GEAR BACKLASH**

Measure the side gear backlash while holding one pinion gear toward the case.

Standard backlash:
0.05 — 0.20 mm (0.0020 — 0.0079 in.)

If the backlash is not within specification, install the proper thrust washers.

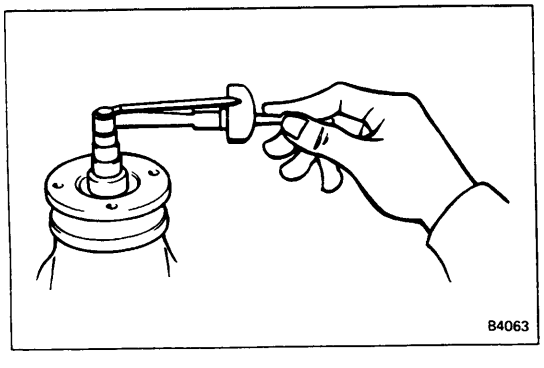

5. **MEASURE DRIVE PINION PRELOAD**

Using a torque meter, measure the preload of backlash between the drive pinion and ring gear.

Preload:
1/2 ton
6 — 10 kg-cm (5.2 — 8.7 in.-lb, 0.6 — 1.0 N·m)
1 ton, C&C and 4WD
9 — 13 kg-cm (7.8 — 11.3 in.-lb, 0.9 — 1.3 N·m)

6. **CHECK TOTAL PRELOAD**

Using a torque meter, measure the total preload.

Total preload: In addition to drive pinion preload
4 — 6 kg-cm
(3.5 — 5.2 in.-lb, 0.4 — 0.6 N·m)

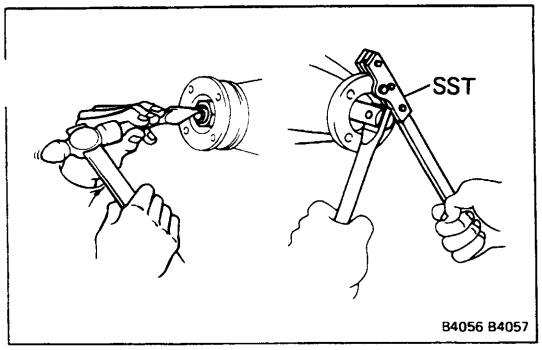

7. REMOVE COMPANION FLANGE

(a) Using a hammer and chisel, loosen the staked part of the nut.

(b) Using SST to hold the flange, remove the nut.

SST 09330-00020

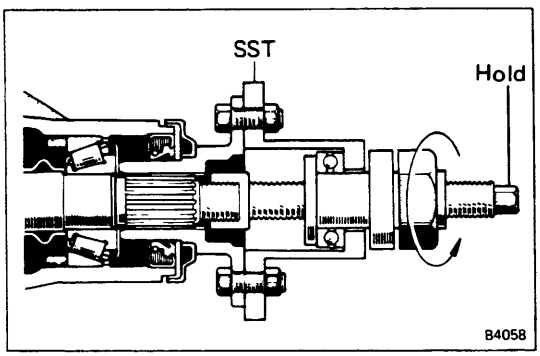

(c) Using SST, remove the companion flange.

SST 09557-22022

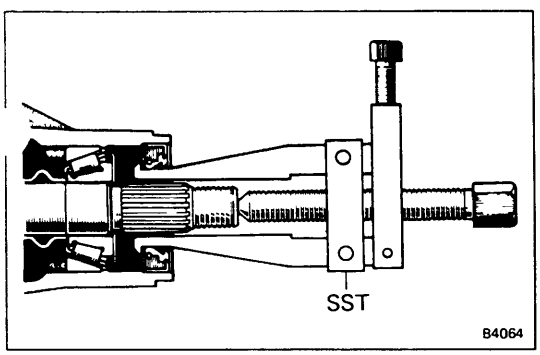

8. REMOVE OIL SEAL AND OIL SLINGER

(a) Using SST, remove the oil seal from the housing.

SST 09308-10010

(b) Remove the oil slinger.

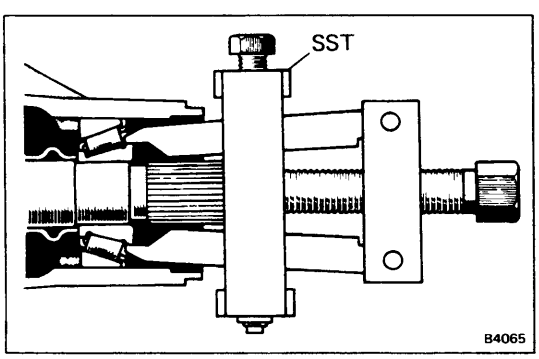

9. REMOVE FRONT BEARING AND BEARING SPACER

(a) Using SST, remove the front bearing from the drive pinion.

SST 09556-30010

(b) Remove the bearing spacer.

If the front bearing is damaged or worn, replace the bearing.

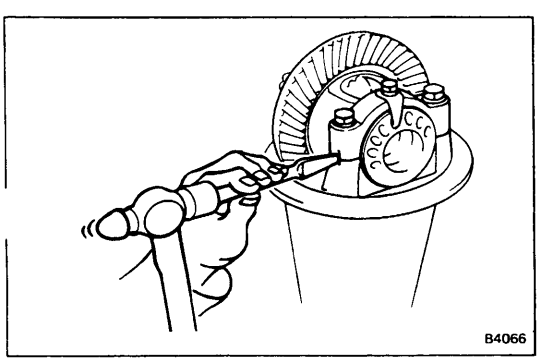

10. REMOVE DIFFERENTIAL CASE AND RING GEAR

(a) Place alignment marks on the bearing cap and differential carrier.

(b) Remove the two adjusting nut locks.

(c) Remove the two bearing caps and two adjusting nuts.

(d) Remove the bearing outer races.

(e) Remove the differential case from the carrier.

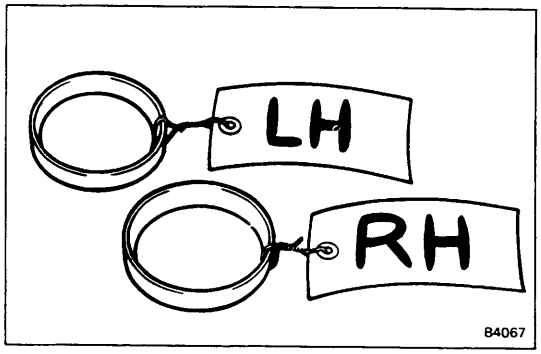

NOTE: Tag the disassembled parts to show the location for reassembly.

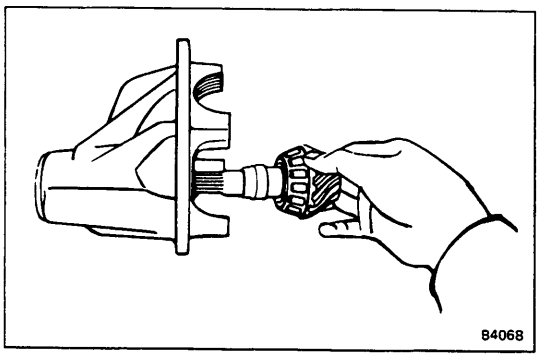

11. REMOVE DRIVE PINION FROM DIFFERENTIAL CARRIER

INSPECTION AND REPLACEMENT OF DIFFERENTIAL COMPONENTS

1. REPLACE DRIVE PINION REAR BEARING

(a) Using a press and SST, pull out the rear bearing from the drive pinion.

SST 09950-00020

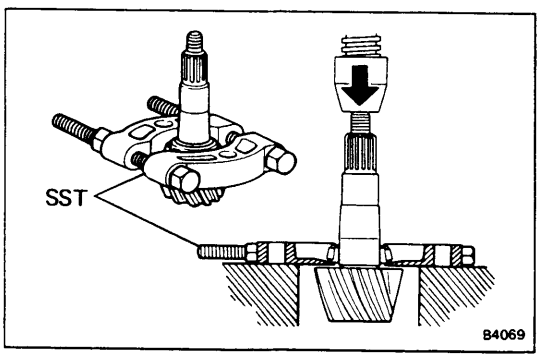

(b) Install the washer on the drive pinion with the chamfered end facing the pinion gear.

(c) Using a press and SST, press the reused washer and new rear bearing on the drive pinion.

SST 09506-30011

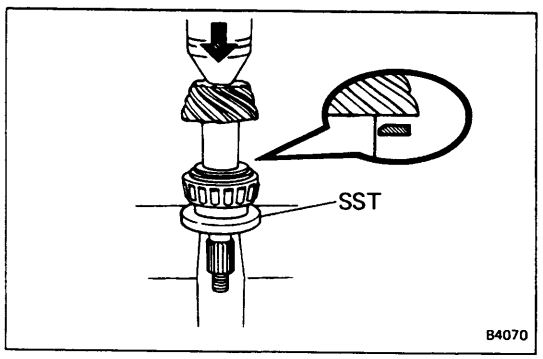

2. REPLACE DRIVE PINION FRONT AND REAR BEARING OUTER RACE

(a) Using a hammer and driver, drive out the outer race.

(b) Using a press and SST, drive in a new outer race.

SST 09608-30011

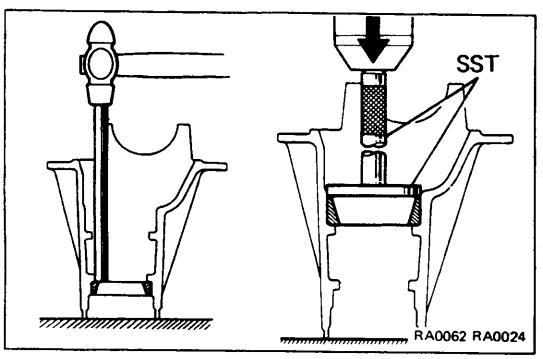

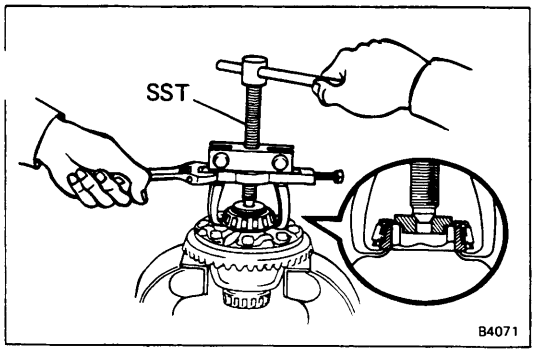

3. REMOVE SIDE BEARINGS FROM DIFFERENTIAL CASE

Using SST, pull the side bearing from the differential case.

SST 09950-20015

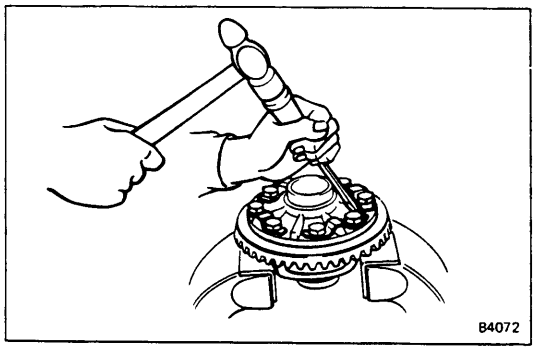

4. REMOVE RING GEAR

(a) Remove the ring gear set bolts and lock plates.

(b) Place alignment marks on the ring gear and differential case.

(c) Using plastic or copper hammer, tap on the ring gear to separate it from the differential case.

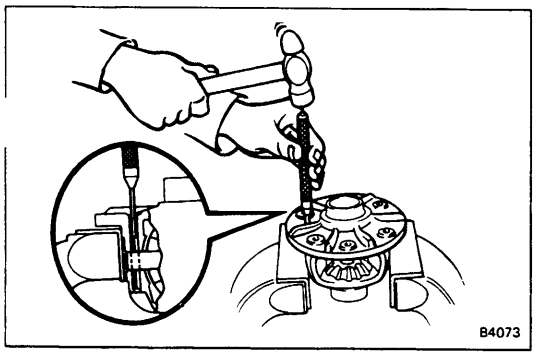

5. DISASSEMBLE DIFFERENTIAL CASE

Using a hammer and punch, drive out the straight pin. Remove the pinion shaft, two pinion gears, two side gears and two thrust washers.

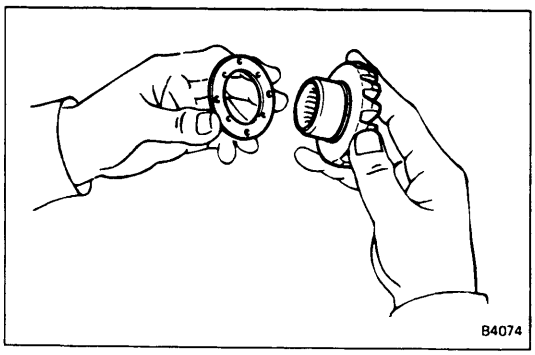

6. ASSEMBLE DIFFERENTIAL CASE

(a) Install the proper thrust washers and side gears.

Using the table below, select thrust washers which will ensure that the backlash is within specification.
Try to select washers of the same size for both sides.

Standard backlash: 0.05 — 0.20 mm (0.0020 — 0.0079 in.)

Thrust washer thickness

1/2 ton		1 ton, C & C and 4WD	
Thickness	mm (in.)	Thickness	mm (in.)
1.0	(0.039)	1.6	(0.063)
1.1	(0.043)	1.7	(0.067)
1.2	(0.047)	1.8	(0.071)
1.3	(0.051)		

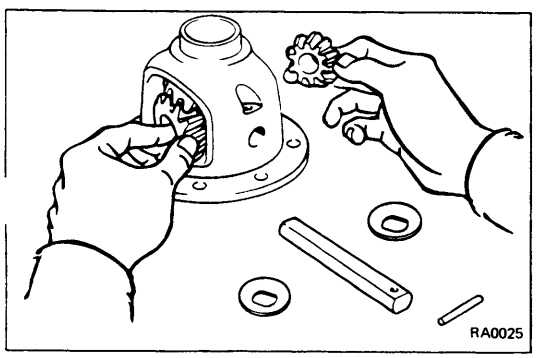

Install thrust washers and side gears in the differential case.

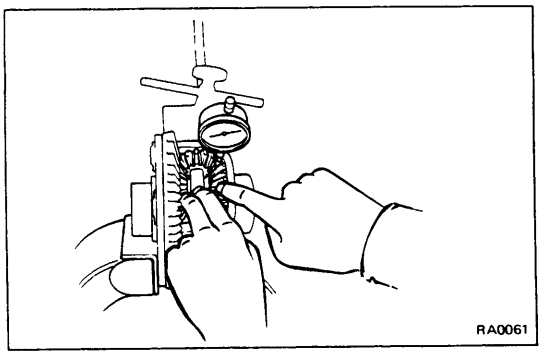

(b) Check the side gear backlash.
Measure the side gear backlash while holding one pinion gear toward the case.

Standard backlash: 0.05 — 0.20 mm (0.0020 — 0.0079 in.)

If the backlash is not within specification, install a thrust washer of different thickness.

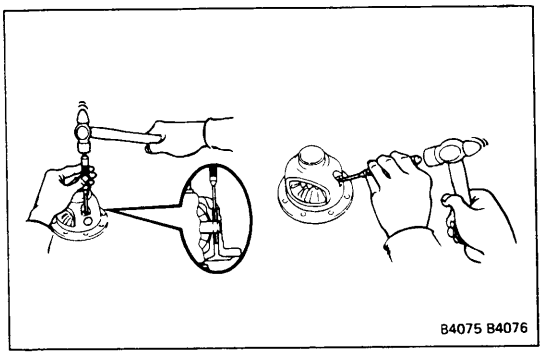

(c) Install the straight pin.
- Using the hammer and punch, drive the straight pin through the case and hole in the pinion shaft.
- Stake the pin and differential case.

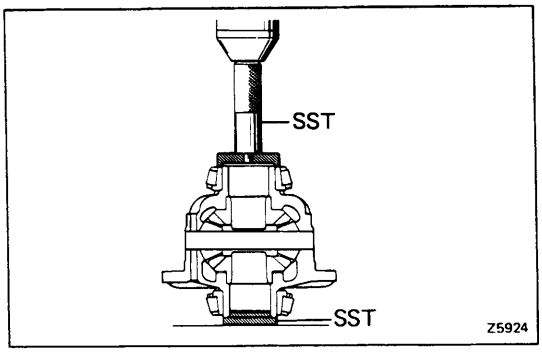

7. INSTALL SIDE BEARINGS

Using a press and SST, press the side bearings on the differential case.

SST 09608-30011

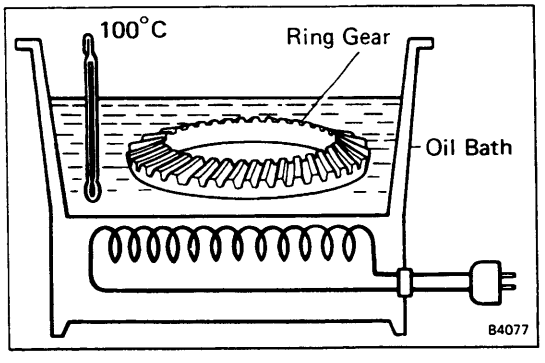

8. INSTALL RING GEAR ON DIFFERENTIAL CASE

(a) Clean the contact surface of the differential case.

(b) Heat the ring gear to about 100°C (212°F) in an oil bath.

CAUTION: Do not heat the ring gear above 110°C (230°F).

(c) Clean the contact surface of the ring gear with cleaning solvent.

(d) Then quickly install the ring gear on the differential case.

(e) Align the marks on the ring gear and differential case.

(f) Coat the ring gear set bolts with gear oil.

(g) Install the lock plates and set bolts. Tighten the set bolts uniformly and a little at a time. Torque the bolts.

Torque: 985 kg-cm (71 ft-lb, 97 N·m)

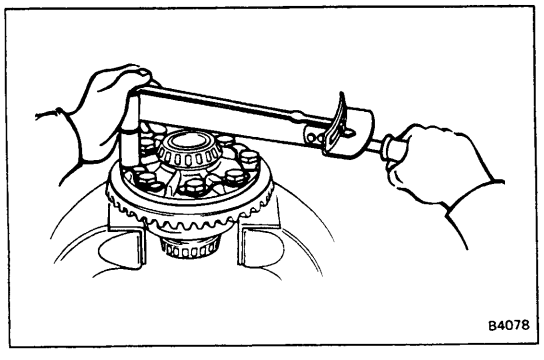

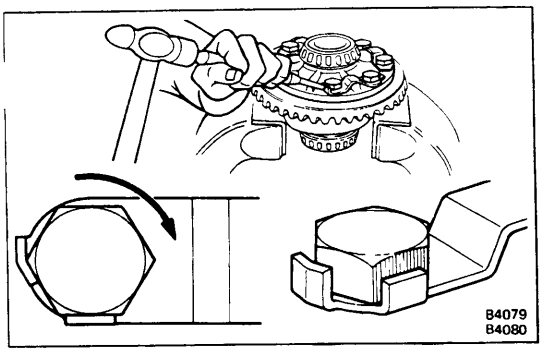

(h) Using a hammer and drift punch, stake the lock plates.

NOTE: Stake one claw flush with the flat surface of the nut. For the claw contacting the protruding portion of the nut, stake only the half on the tightening side.

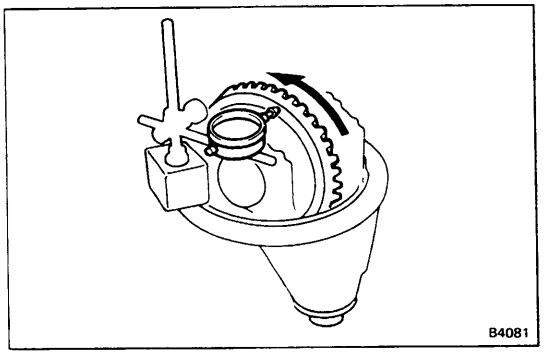

(i) Check the ring gear runout.

Maximum runout:

1/2 ton	**0.07 mm (0.0028 in.)**
1 ton, C&C and 4WD	**0.10 mm (0.0039 in.)**

Install the differential case onto the carrier and tighten the adjusting nut just to where there is no play in the bearing.

ASSEMBLY OF DIFFERENTIAL

(See page RA-6)

1. TEMPORARILY ADJUST DRIVE PINION PRELOAD

(a) Install the following parts.

- Drive pinion
- Front bearing

NOTE: Assemble the spacer, oil slinger and oil seal after adjusting the gear contact pattern.

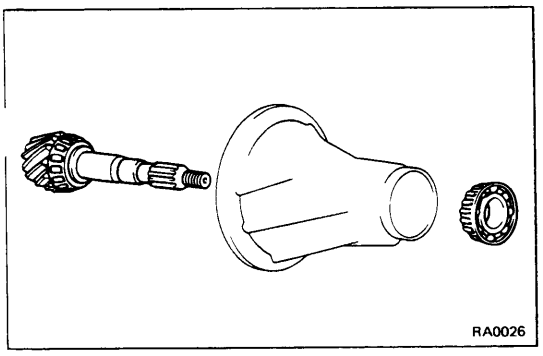

(b) Install the companion flange with SST.

SST 09557-22022

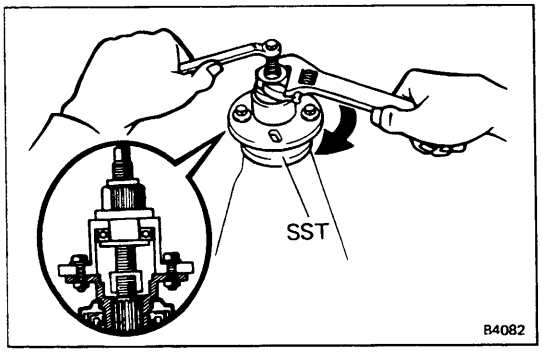

(c) Adjust the drive pinion preload by tightening the companion flange nut.

Using SST to hold the flange, tighten the nut.

SST 09330-00020

CAUTION: As there is no spacer, tighten a little at a time, being careful not to overtighten.

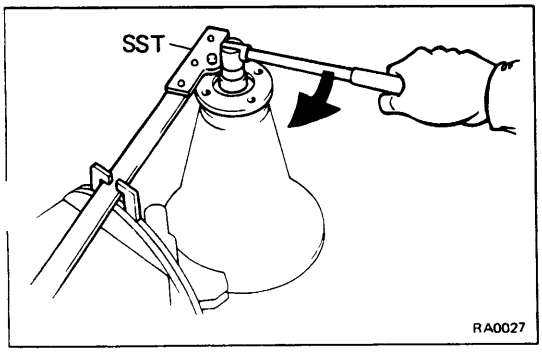

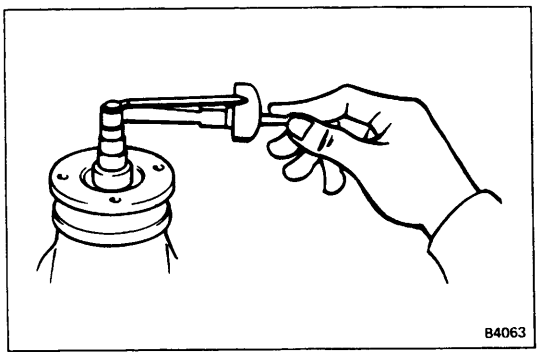

(d) Using a torque meter, measure the preload.

Preload:
New bearing
1/2 ton
12 — 19 kg-cm (10.4 — 16.5 in.-lb, 1.2 — 1.9 N·m)
1 ton, C&C and 4WD
19 — 26 kg-cm (16.5 — 22.6 in.-lb, 1.9 — 2.5 N·m)
Reused bearing
1/2 ton
6 — 10 kg-cm (5.2 — 8.7 in.-lb, 0.6 — 1.0 N·m)
1 ton, C&C and 4WD
9 — 13 kg-cm (7.8 — 11.3 in.-lb, 0.9 — 1.3 N·m)

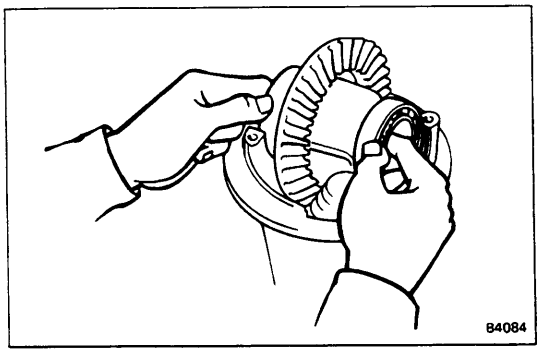

2. INSTALL DIFFERENTIAL CASE IN CARRIER

(a) Place the bearing outer races on their respective bearings. Make sure the left and right outer races are not interchanged.

(b) Install the case in the carrier.

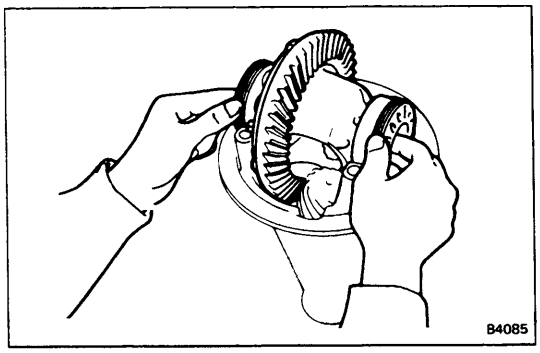

3. INSTALL ADJUSTING NUTS

Install the adjusting nuts on their respective carrier, making sure the nuts are threaded properly.

NOTE: Make sure that there is backlash between the ri gear and drive pinion.

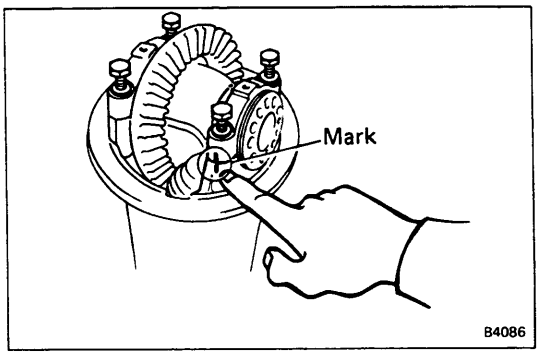

4. INSTALL BEARING CAPS

Align the marks on the cap and carrier. Screw in the two bearing cap bolts two or three turns and press down the bearing cap by hand.

NOTE: If the bearing cap does not fit tightly on the carrier, the adjusting nuts is not threaded properly. Reinstall the adjusting nuts if necessary.

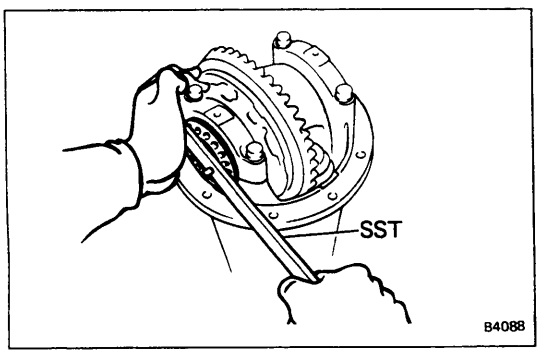

5. ADJUST SIDE BEARING PRELOAD

(a) Tighten the bearing cap bolts until the spring washers are slightly compressed.

(b) Using SST, tighten the adjusting nut on the ring gear side until the ring gear has a backlash of about 0.2 mm (0.008 in.).

SST 09504-00011

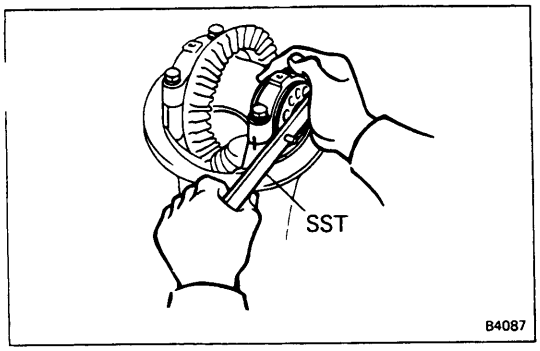

(c) Using SST, firmly tighten the adjusting nut on the drive pinion side.

(d) Check the ring gear backlash.

If tightening the adjusting nut creates ring gear backlash, loosen the nut so that backlash is eliminated.

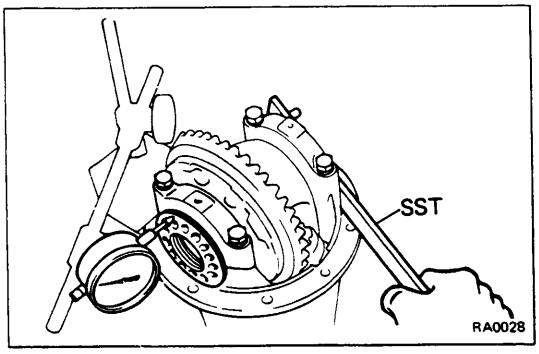

(e) Place a dial indicator on the top of the bearing cap on the ring gear side.

(f) Adjust the side bearing for zero preload by tightening the other adjusting nut until the pointer on the indicator begins to move.

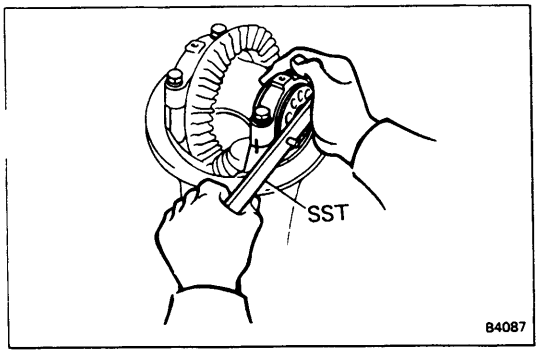

(g) Tighten the adjusting nut 1 — 1 1/2 notches from the zero preload position.

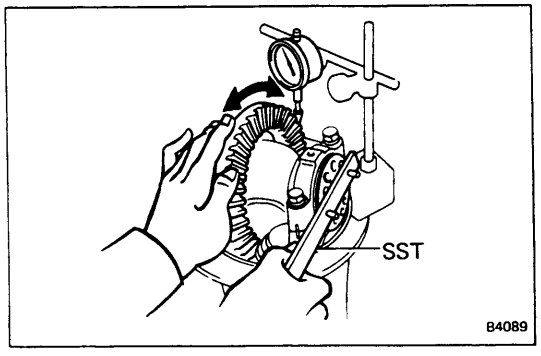

(h) Using a dial indicator, adjust the ring gear backlash until it is within specification.

Backlash: 0.13 — 0.18 mm (0.0051 — 0.0071 in.)

NOTE: The backlash is adjusted by turning the left and right adjusting nuts equal amounts. For example, loosen the nut on the left side one notch and tighten the nut on the right side one notch.

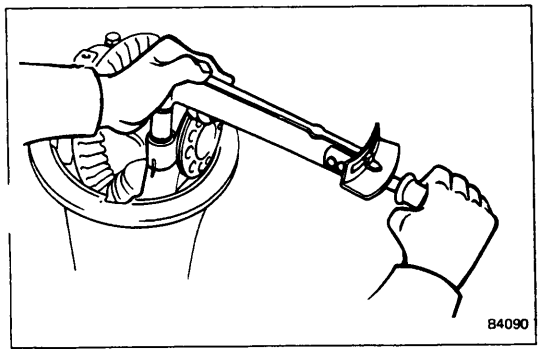

(i) Torque the bearing cap bolts.

Torque: 800 kg-cm (58 ft-lb, 78 N·m)

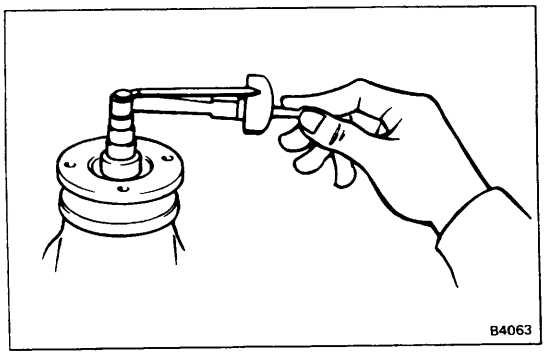

(j) Recheck the ring gear backlash.

(k) Using a torque meter, measure the total preload.

Total preload:
In addition to drive pinion preload
4 – 6 kg-cm (3.5 – 5.2 in.-lb, 0.4 – 0.6 N·m)
Backlash: 0.13 – 0.18 mm (0.0051 – 0.0071 in.)

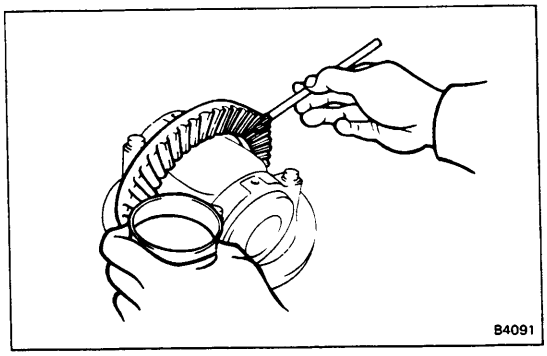

6. INSPECT TOOTH CONTACT BETWEEN RING GEAR AND DRIVE PINION

(a) Coat 3 or 4 teeth at three different positions on the ring gear with red lead.

(b) Hold the companion flange firmly and rotate the ring gear in both directions.

(c) Inspect the tooth pattern.

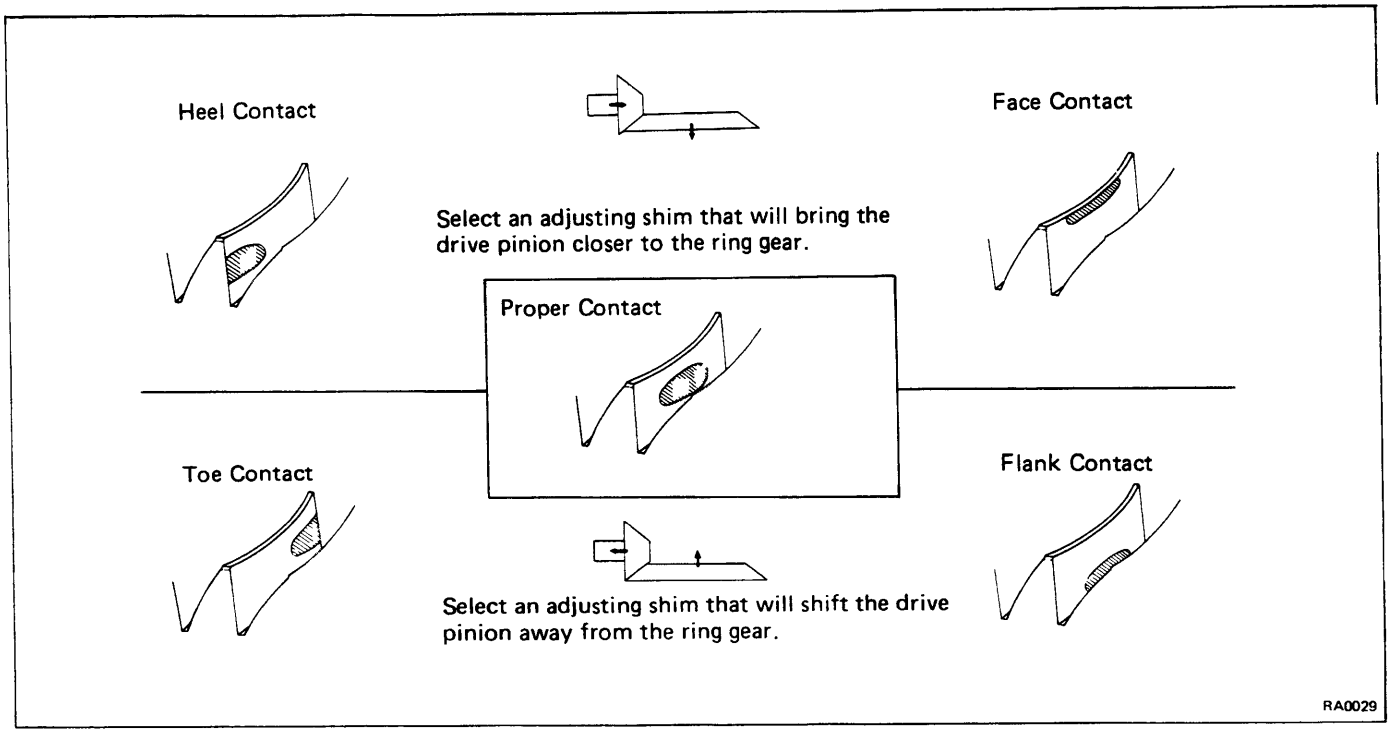

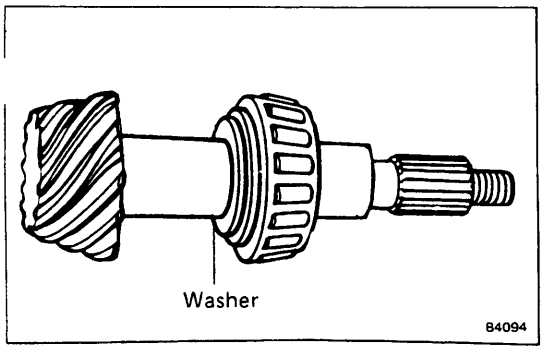

If the teeth are not contacting properly, use the following chart to select a proper washer for correction.

Washer thickness

1/2 ton		1 ton, C&C and 4WD	
Thickness	mm (in.)	Thickness	mm (in.)
2.24	(0.0882)	1.70	(0.0669)
2.27	(0.0894)	1.73	(0.0681)
2.30	(0.0906)	1.76	(0.0693)
2.33	(0.0917)	1.79	(0.0705)
2.36	(0.0929)	1.82	(0.0717)
2.39	(0.0941)	1.85	(0.0728)
2.42	(0.0953)	1.88	(0.0740)
2.45	(0.0965)	1.91	(0.0752)
2.48	(0.0976)	1.94	(0.0764)
2.51	(0.0988)	1.97	(0.0776)
2.54	(0.1000)	2.00	(0.0787)
2.57	(0.1012)	2.03	(0.0799)
2.60	(0.1024)	2.06	(0.0811)
2.63	(0.1035)	2.09	(0.0823)
2.66	(0.1047)	2.12	(0.0835)
2.69	(0.1059)	2.15	(0.0846)
2.72	(0.1071)	2.18	(0.0858)
		2.21	(0.0870)
		2.24	(0.0882)
		2.27	(0.0894)
		2.30	(0.0906)
		2.33	(0.0917)

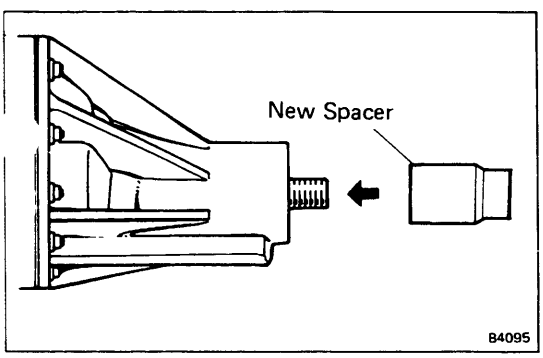

7. REMOVE COMPANION FLANGE
(See step 7 on page RA-9)

8. REMOVE FRONT BEARING
(See step 9 on page RA-9)

9. INSTALL NEW BEARING SPACER AND FRONT BEARING

(a) Install a new bearing spacer on the shaft.

(b) Install the front bearing on the shaft.

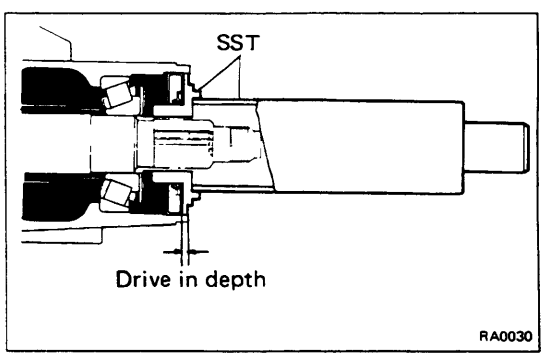

10. INSTALL OIL SLINGER AND NEW OIL SEAL

(a) Install the oil slinger facing as shown.

(b) Using SST, drive in a new oil seal as shown.

SST 09554-30011

Oil seal drive in depth:

1/2 ton	**1.5 mm (0.059 in.)**
1 ton, C&C and 4WD	**1.0 mm (0.039 in.)**

(c) Apply MP grease to the oil seal lip.

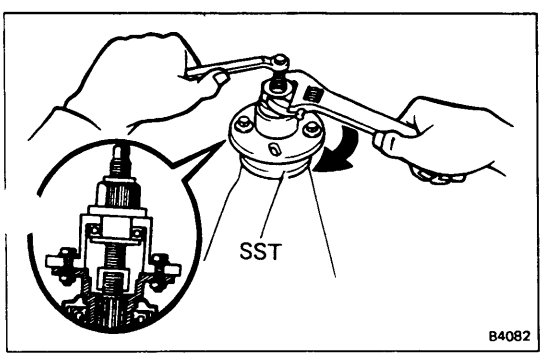

11. INSTALL COMPANION FLANGE

(a) Install the companion flange with SST.

SST 09557-22022

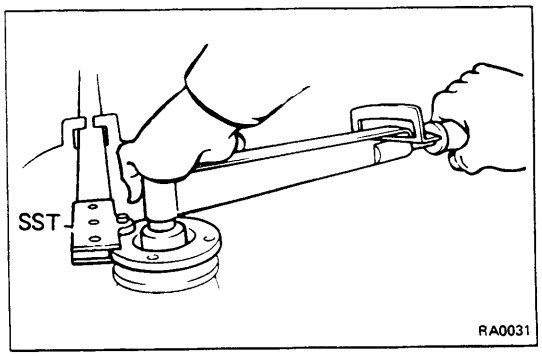

(b) Coat the threads of a new nut with MP grease.

(c) Using SST to hold the flange, tighten the nut.

SST 09330-00020

Torque:
1/2 ton
1,100–2,400 kg-cm (80–173 ft-lb, 108–235 N·m)
1 ton, C&C and 4WD
2,000–3,500 kg-cm (145–253 ft-lb, 197–343 N·m)

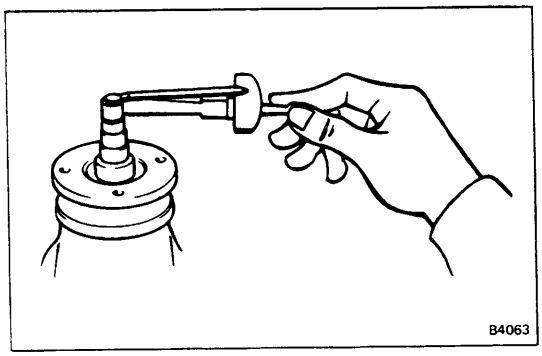

12. ADJUST DRIVE PINION PRELOAD

Using a torque meter, measure the preload of the backlash between the drive pinion and ring gear.

Preload:
New bearing
1/2 ton
12 – 19 kg-cm (10.4 – 16.5 in.-lb. 1.2 – 1.9 N·m)
1 ton, C&C and 4WD
19 – 26 kg-cm (16.5 – 22.6 in.-lb, 1.9 – 2.5 N·m)
Reused bearing
1/2 ton
6 – 10 kg-cm (5.2 – 8.7 in.-lb, 0.6 – 1.0 N·m)
1 ton, C&C and 4WD
9 – 13 kg-cm (7.8 – 11.3 in.-lb, 0.9 – 1.3 N·m)

(a) If preload is greater than specification, replace the bearing spacer.

(b) If preload is less than specification, retighten the nut 130 kg-cm (9 ft-lb, 13 N·m) at a time until the specified preload is reached.

If the maximum torque is exceeded while retightening the nut, replace the bearing spacer and repeat the preload procedure. Do not back off the pinion nut to reduce the preload.

Maximum torque:
1/2 ton
2,400 kg-cm (174 ft-lb, 235 N·m)
1 ton, C&C and 4WD
3,500 kg-cm (253 ft-lb, 343 N·m)

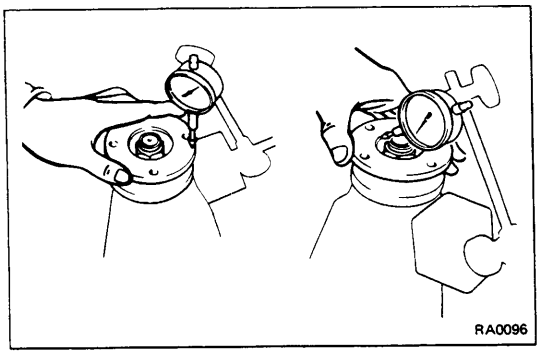

13. CHECK DEVIATION OF COMPANION FLANGE

Maximum longitudinal deviation:
0.10 mm (0.0039 in.)
Maximum latitudinal deviation:
0.10 mm (0.0039 in.)

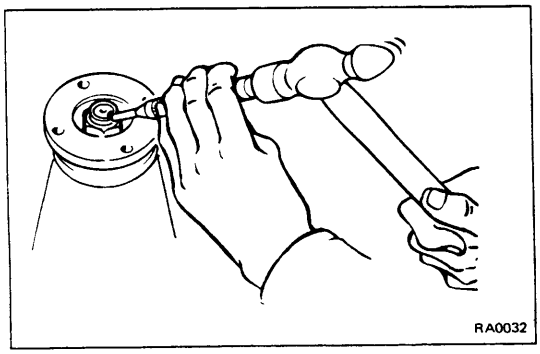

14. STAKE DRIVE PINION NUT

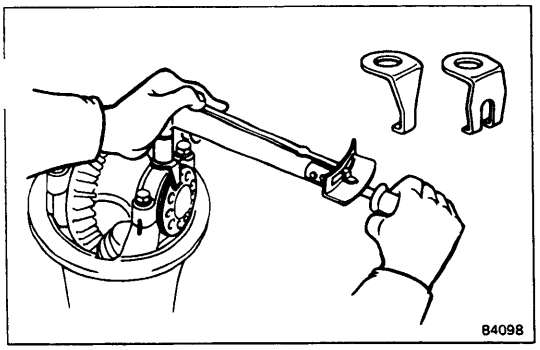

15. INSTALL ADJUSTING NUT LOCKS

(a) Select either a lock No.1 or No.2 whichever will fit the adjusting nuts.

(b) Install the lock on the bearing caps.

Torque: 130 kg-cm (9 ft-lb, 13 N·m)

INSTALLATION OF DIFFERENTIAL

(See page RA-6)

1. INSTALL A NEW GASKET

2. INSTALL DIFFERENTIAL CARRIER ASSEMBLY

Install the differential carrier assembly in the axle and install the 10 nuts. Torque the nuts.

Torque: 260 kg-cm (19 ft-lb, 25 N·m)

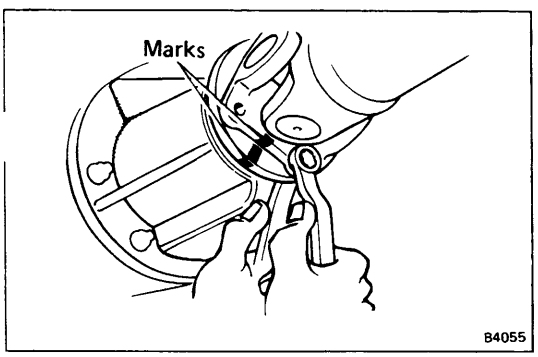

3. CONNECT PROPELLER SHAFT FLANGE TO COMPANION FLANGE

(a) Align the marks on the flanges and connect the flanges with four bolts and nuts.

(b) Torque the bolts and nuts.

Torque: 750 kg-cm (54 ft-lb, 74 N·m)

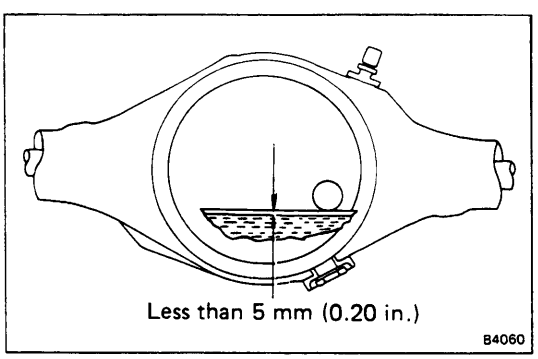

4. INSTALL DRAIN PLUG AND FILL DIFFERENTIAL WITH GEAR OIL

Hypoid gear oil:	**API GL-5**
	Above −18°C (0°F) SAE 90
	Below −18°C (0°F) SAE 80W or 80W-90
Capacity:	
1/2 ton	**1.7 liters (1.8 US qts, 1.5 Imp.qts)**
1 ton and C&C	**1.8 liters (1.9 US qts, 1.6 Imp.qts)**
4WD	**2.2 liters (2.3 US qts, 1.9 Imp.qts)**

Install a filler plug.

LEAF SPRING TYPE REAR SUSPENSION

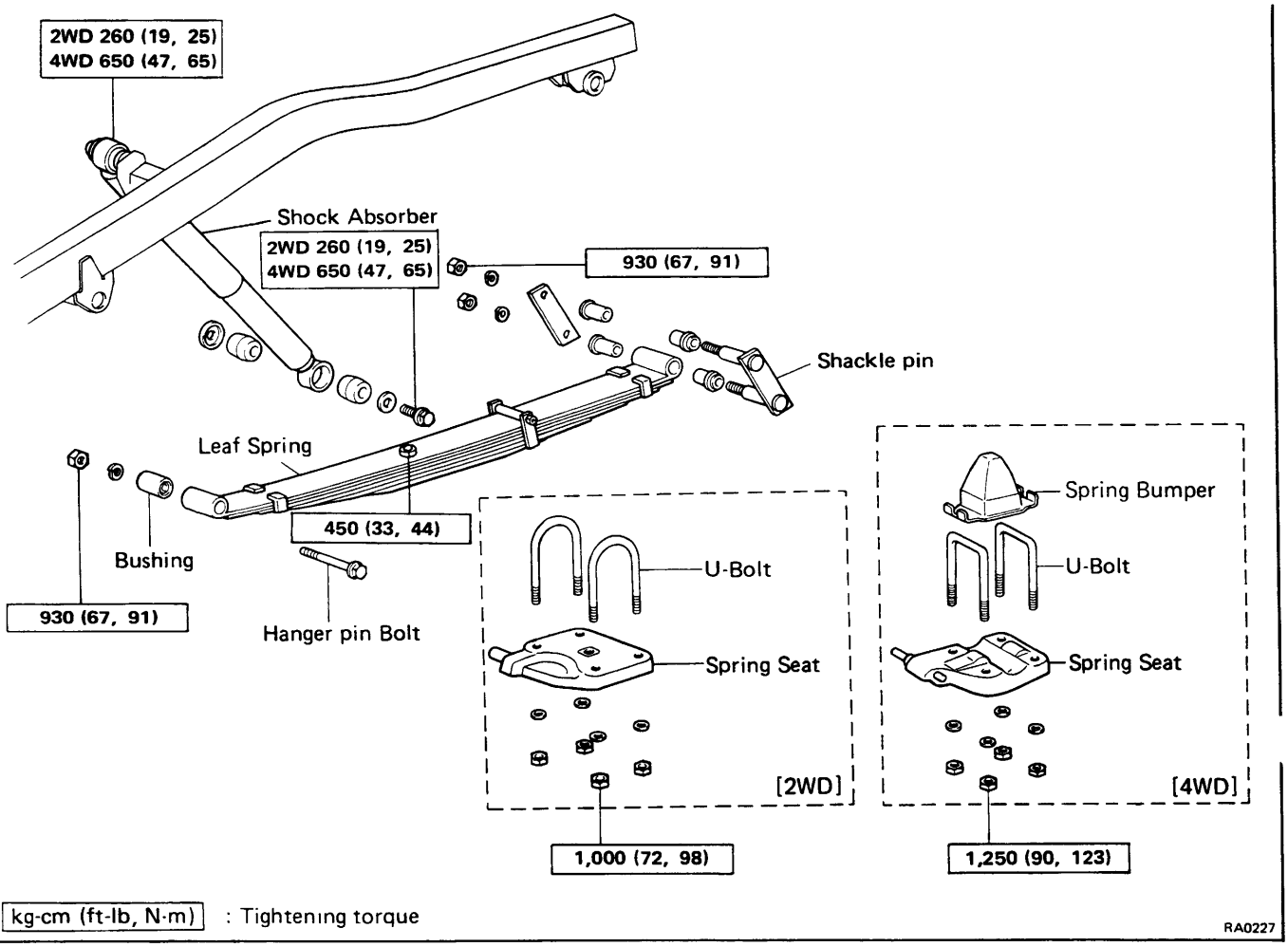

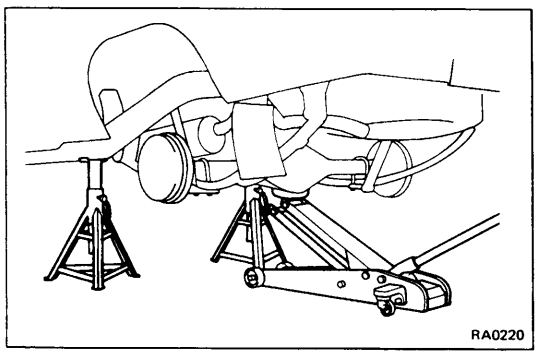

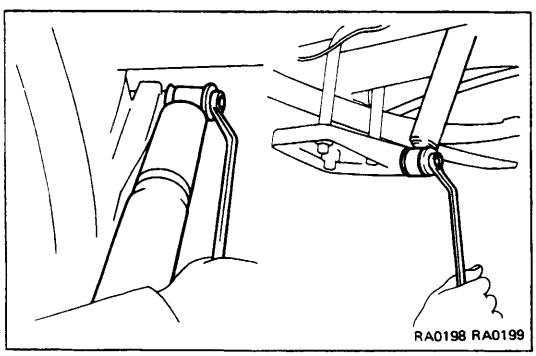

Leaf Spring and Shock Absorber

REMOVAL OF LEAF SPRING AND SHOCK ABSORBER

1. JACK UP AND SUPPORT BODY

(a) Jack up and support the body on the stands.

(b) Lower the axle housing until the leaf spring tension is free, and keep it at this position.

2. REMOVE SHOCK ABSORBER

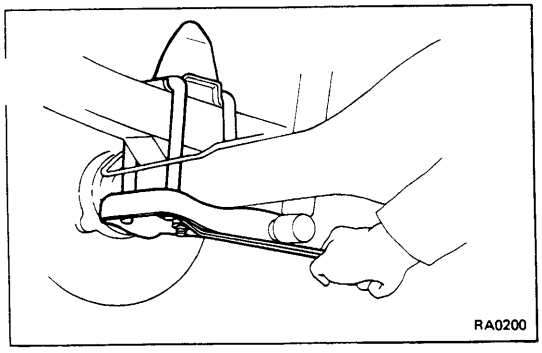

3. REMOVE U-BOLTS

(a) Remove the U-bolt mounting nuts.

(b) Remove the spring lower seat and pad.

(c) Remove the U-bolt.

(d) Remove the spring bumper. (4WD only)

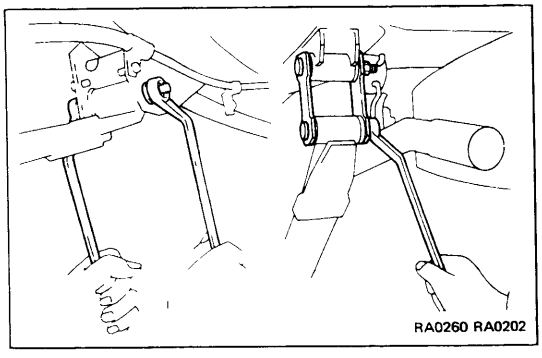

4. REMOVE LEAF SPRING

(a) Remove the hanger pin bolt.

(b) Disconnect the leaf from the bracket.

(c) Remove the shackle pin mounting nuts.

(d) Remove the shackle pin and plate and remove the leaf spring.

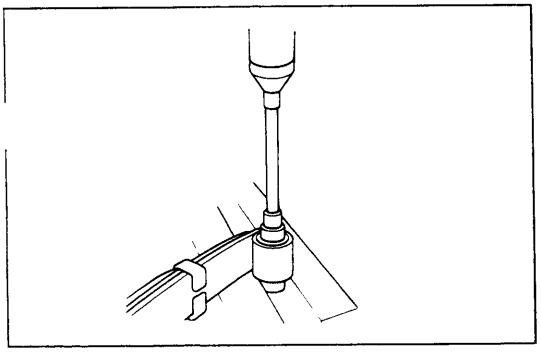

REPLACEMENT OF EYE BUSHING

REPLACE EYE BUSHINGS WITH PRESS

Using a press and socket wrench, replace the eye bushings.

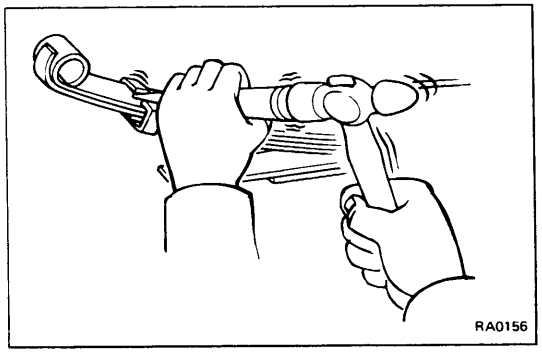

REPLACEMENT OF LEAF SPRING

1. BEND OPEN SPRING CLIP

Using a chisel, pry up the spring clip.

2. REMOVE CLIP BOLT (4 WD only)

Remove the clip bolt and collar from the clip

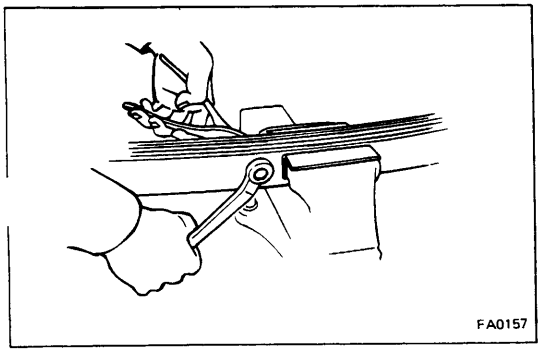

3. REMOVE CENTER BOLT

Hold the spring near the center bolt in a vise and remove the center bolt.

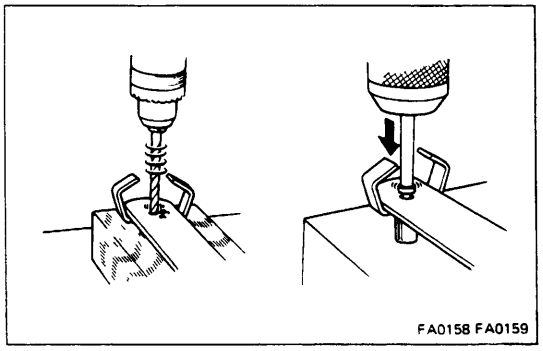
FA0158 FA0159

4. IF NECESSARY, REPLACE SPRING CLIP

(a) Drill off the head of the rivet, and drive it out.

(b) Install a new rivet into the holes of the spring leaf and clip. Then rivet with a press.

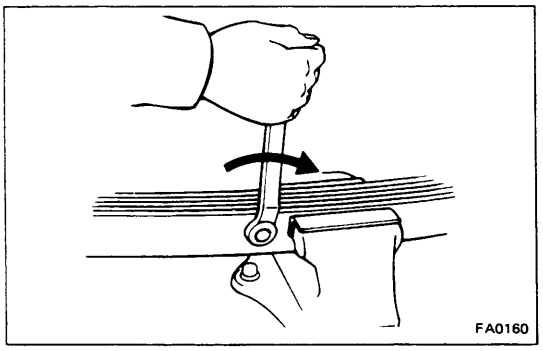
FA0160

5. INSTALL SPRING CENTER BOLT

(a) Align the leaf holes and secure the leaves with a vise.

(b) Install and tighten the spring center bolt.

Torque: 450 kg-cm (33 ft-lb, 44 N·m)

6. INSTALL CLIP BOLT (4WD only)

Position the collar and install the clip bolt.
Torque the bolt.

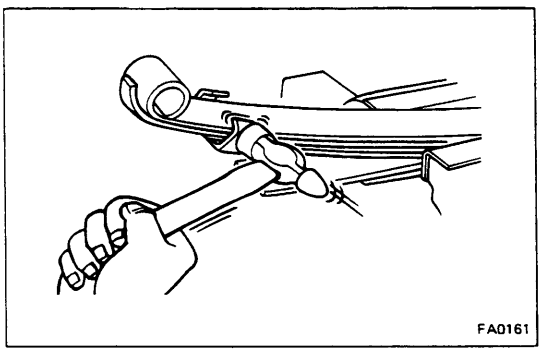
FA0161

7. BEND SPRING CLIP

Using a hammer, bend the spring clip into position.

INSTALLATION OF LEAF SPRING

(See page RA-20)

1. INSTALL LEAF SPRING

(a) Place the front end of leaf spring in the front bracket and install the hanger pin bolt.

(b) Finger tighten the hanger pin nut.

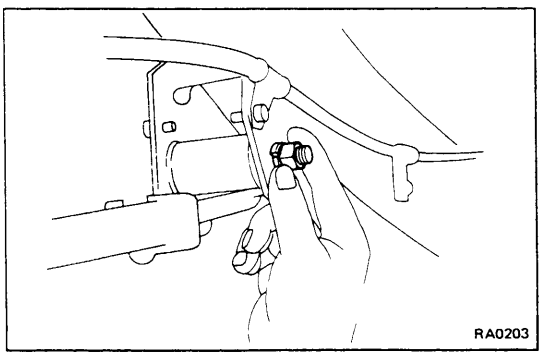
RA0203

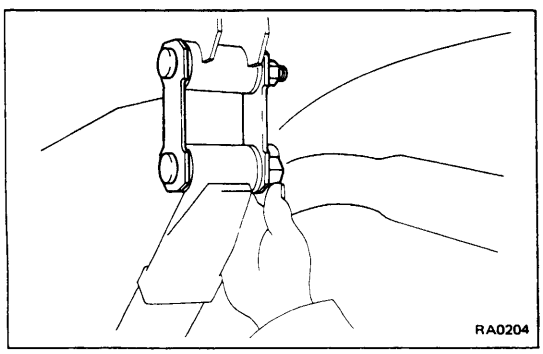
RA0204

(c) Place the rear end of leaf spring in the rear bracket, and install the shackle pin.

(d) Install the plate and finger tighten the nuts.

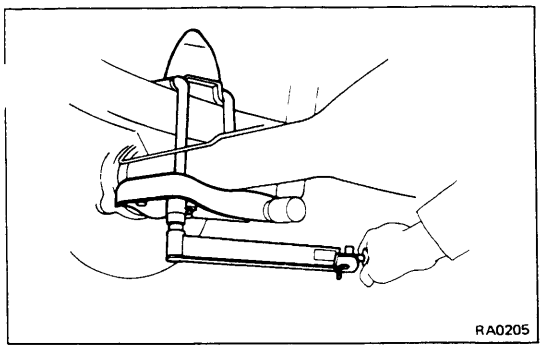
RA0205

2. INSTALL U-BOLTS

(a) Install the spring bumper onto the leaf spring. (4WD only)

(b) Install the U-bolts onto the axle housing or leaf spring.

(c) Install the spring seat and nuts under the leaf spring or axle housing.

(d) Tighten the U-bolt mounting nuts.

Torque: 2WD 1,000 kg-cm (72 ft-lb, 98 N·m)
4WD 1,250 kg-cm (90 ft-lb, 123 N·m)

NOTE: Tighten the U-bolts so that the lengh of all the U-bolts under the spring seat are the same.

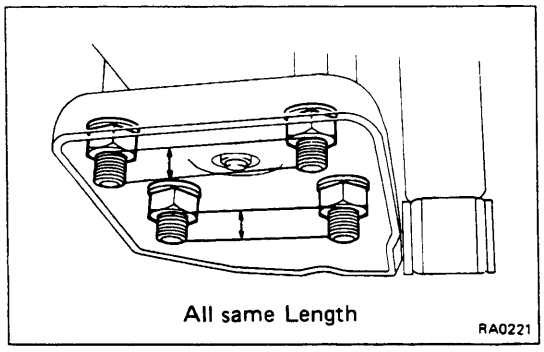

RA0221

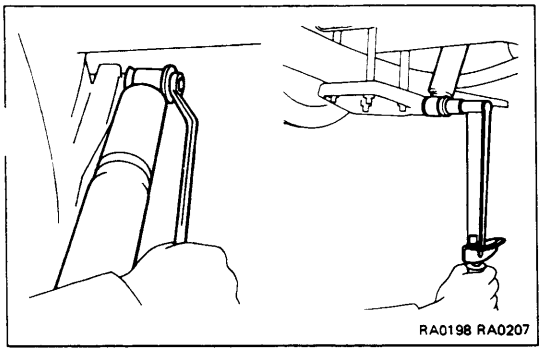
RA0198 RA0207

3. INSTALL REAR SHOCK ABSORBER

(a) Connect the shock absorber to the frame with the bolt. Tighten the bolt.

Torque: 2WD 260 kg-cm (19 ft-lb, 25 N·m)
4WD 650 kg-cm (47 ft-lb, 64 N·m)

(b) Connect the shock absorber to the spring seat with the bolt. Tighten the bolt.

Torque: 2WD 260 kg-cm (19 ft-lb, 25 N·m)
4WD 650 kg-cm (47 ft-lb, 64 N·m)

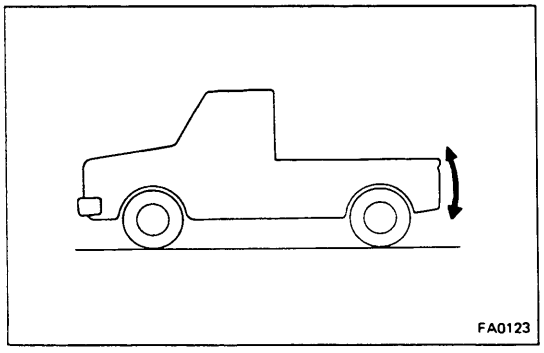
FA0123

4. STABILIZE SUSPENSION

Remove the stands and bounce the car to stabilize the suspension.

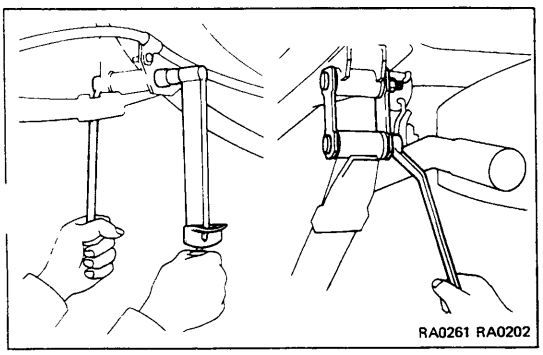
RA0261 RA0202

5. TIGHTEN HANGER PIN AND SHACKLE PIN

Tighten the hanger pin nut.

Torque: 930 kg-cm (67 ft-lb, 91 N·m)

Tighten the shackle pin nuts.

Torque: 930 kg-cm (67 ft-lb, 91 N·m)

BRAKE SYSTEM

	Page
PRECAUTIONS	BR-2
TROUBLESHOOTING	BR-2
CHECKS AND ADJUSTMENTS	BR-5
MASTER CYLINDER	BR-8
BRAKE BOOSTER	BR-11
FRONT BRAKE	BR-13
2WD	BR-13
4WD	BR-25
REAR BRAKE	BR-30
2WD	BR-30
4WD	BR-43
LOAD SENSING PROPORTIONING AND BY-PASS VALVE (LSP & BV)	BR-50
BRAKE HOSES AND TUBES	BR-55

PRECAUTIONS

1. **Care must be taken to replace each part properly as it co affect the performance of the brake system and result in a driving hazard. Replace the parts with parts of the same part number or equivalent.**

2. **It is very important to keep parts and area clean when repairing the brake system.**

TROUBLESHOOTING

Problem	Possible cause	Remedy	Page
Low or spongy pedal	Linings worn	Replace brake linings	BR-30,37,43
	Drums worn	Replace drums	BR-30,37,43
	Leak in brake system	Repair leak	
	Master cylinder faulty	Repair or replace master cylinder	BR-8
	Air in brake system	Bleed brake system	BR-6
	Wheel cylinder faulty	Repair wheel cylinder	BR-30,37,43
Brakes drag	Parking brake out of adjustment	Adjust parking brake	BR-7
	Binding parking brake wire	Repair as necessary	
	Booster push rod out of adjustment	Adjust push rod	BR-10
	Return spring faulty	Replace spring	
	Brake line restricted	Repair as necessary	
	Lining cracked or distorted	Replace brake linings	BR-30,37,
	Wheel cylinder sticking	Repair as necessary	BR-30,37,43
	Master cylinder faulty	Repair or replace master cylinder	BR-8
Brakes pull	Incorrect front wheel alignment	Adjust front wheel alignment	FA-3
	Unmatched tires on same axle	Correct	
	Tires improperly inflated	Inflate tires to proper pressure	
	Oil or grease on linings	Check for cause. Replace linings	BR-30,37,43
	Brake shoes distorted	Replace brake shoes	BR-30,37,43
	Linings worn or glazed	Replace linings	BR-30,37,43
	Drum out of round	Replace drums	BR-30,37,43
	Return spring faulty	Replace spring	
	Wheel cylinder faulty	Repair wheel cylinder	BR-30,37,43
Brakes grab/chatter	Drums out of round	Replace drums	BR-30,37,43
	Scored brake drums	Replace drums	BR-30,37,43
	Scored brake drums	Replace drums	BR-30,37,43
	Brake shoes distorted	Replace brake shoes	BR-30,37,43
	Linings worn or glazed	Replace linings	BR-30,37,43
	Oil or grease on linings	Check for cause. Replace linings	BR-30,37,43
	Wheel cylinder faulty	Repair wheel cylinder	BR-30,37,43
	Brake booster faulty	Repair booster	BR-11

TROUBLESHOOTING (Cont'd)

Problem	Possible cause	Remedy	Page
Hard pedal but brakes inefficient	Oil or grease on linings	Check for cause. Replace linings	BR-30,37,43
	Brake shoes distorted	Replace brake shoes	BR-30,37,43
	Linings worn or glazed	Replace linings	BR-30,37,43
	Brake booster faulty	Repair booster	BR-11
	Brake line restricted	Repair as necessary	
Snapping or clicking noise when brakes are applied ledges worn	Drum brakes in 3 places — brake shoes binding at backing plate ledges	Lubricate	BR-30,37,43
	Drum brakes in 3 places — backing plate	Replace and lubricate ledges	BR-30,37,43
	Drum braks—loose or missing or clip	Replace	BR-30,37,43
	Drum brakes—looseness of set bolt at backing plate	Tighten	BR-30,37,43
Scraping or grinding noise when brakes are applied	Worn brake lining	Replace refinish drums if heavily scored	BR-30,37,43
	Dust cover to drum interference	Correct or replace	
	Other brake system components: Warped or bent brake backing plate cracked drums	Inspect or service	BR-30,37,43
	Tires rubbing against chassis and body	Inspect or service	
Squeaking, squealing groaning or chattering noise when brakes are applied Note: Brake friction materials inherently generate noise and heat in order to dissipate energy. As a result, occasional squeal is normal and is aggravated by severe environmental conditions such as cold, heat, wetness, snow, salt, mud, etc. This occasional squeal is not a functional problem and does not indicate any loss of brake effectiveness	Brake drums and linings worn or scored	Inspect, service or replace	BR-30,37,43
	Dirty, greasy, contaminated or glazed linings	Clean or replace	BR-30,37,43
	Improper lining parts	Inspect for correct usage replace	BR-30,37,43
	Maladjustment of brake pedal or booster push-rod	Inspect and adjust	BR-5, 12
	Drum brakes—weak damaged or incorrect shoe retracting springs, loose or damaged shoe retaining pins, springs and clips and grooved backing plate ledges	Inspect, service or replace	BR-30,37,43

TROUBLESHOOTING (Cont'd)

Problem	Possible cause	Remedy	Page
Squealing and squeaking noise when brakes are not applied	Bent or warped backing plate causing interference with drum	Service or replace	BR-30,37,43
	Improper machining of drum causing interference with backing plate or shoe	Replace drum	BR-30,37,43
	Maladjustment of brake pedal or booster push-rod	Inspect and adjust	BR-5, 12
	Poor return of brake booster or master cylinder or wheel cylinder	Inspect, service or replace	BR-8,11,30 37,43
	Other brake system components: Loose or extra parts in brakes Drum adjustment too tight causing lining to glaze Worn, damaged or insufficiently lubricated wheel bearings	Inspect, service, replace as required	
	Drum brakes—weak, damaged or incorrect shoe reracting springs		
	Drum brakes—grooved backing plate ledges		
Groaning, clicking or rattling noise when brakes are not applied	Loose wheel lug nuts	Tighten to correct torque. Replace if stud holes are elongated	
	Maladjustment of brake pedal or booster push-rod	Inspect and adjust	BR-5, 12
	Drum brakes—loose or extra parts	Inspect, remove or service	BR-30,37,43
	Worn, damaged or dry wheel bearings	Inspect, lubricate or replace	

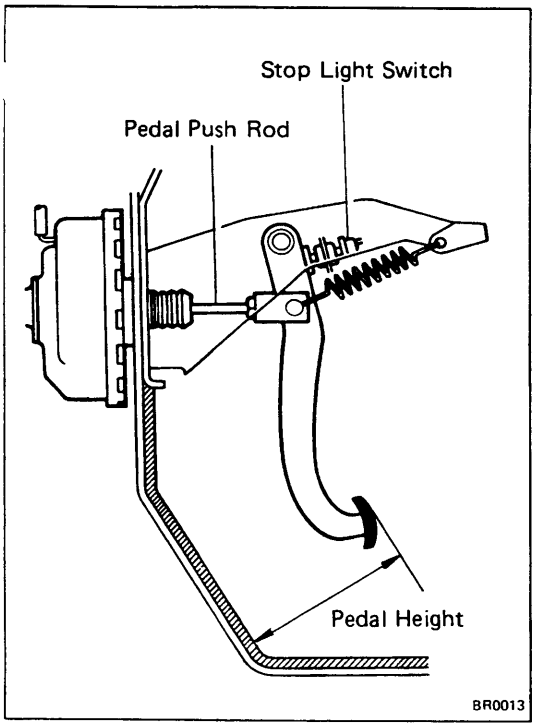

CHECKS AND ADJUSTMENTS

CHECK AND ADJUSTMENT OF BRAKE PEDAL

1. CHECK THAT PEDAL HEIGHT IS CORRECT

Pedal height: 144 — 149 mm (5.67 — 5.87 in.)

If incorrect, adjust the pedal height.

2. IF NECESSARY, ADJUST PEDAL HEIGHT

(a) Sufficiently loosen the stop light switch.

(b) Adjust the pedal height by turning the pedal push rod.

(c) Return the stop light switch until its body lightly contacts the pedal stopper.

NOTE: After adjusting the pedal height, check and adjust the pedal freeplay.

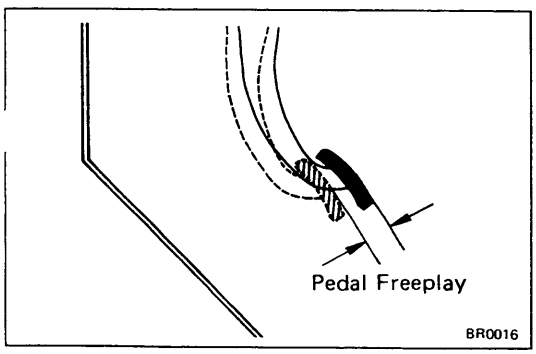

3. CHECK AND ADJUST PEDAL FREEPLAY

(a) Stop the engine and depress the brake pedal several times until there is no more vacuum left in the booster.

(b) Push in the pedal until the beginning of resistance is felt. Measure the distance, as shown.

Pedal freeplay: 3 — 6 mm (0.12 — 0.24 in.)

NOTE: The pedal freeplay is the amount of the stroke until the booster air valve is moved by the pedal push rod.

(c) If incorrect, adjust the pedal freeplay by turning the pedal push rod.

(d) Start the engine and confirm that the pedal freeplay exists.

NOTE: Afer adjusting the pedal freeplay, check the pedal height.

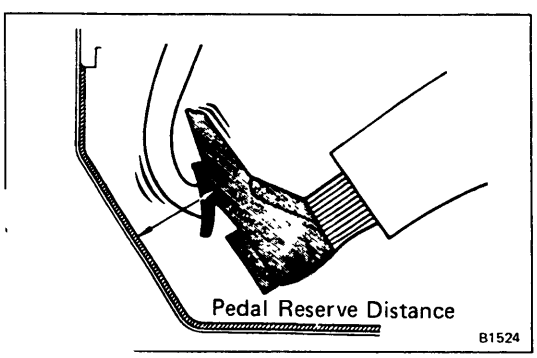

4. CHECK THAT PEDAL RESERVE DISTANCE IS CORRECT

Depress the pedal and measure the pedal reserve distance, as shown.

Pedal reserve distance from asphalt sheet at 50 kg (110.2 lb, 490 N):

2WD	**1/2 ton**	**More than 65 mm (2.56 in.)**
	1 ton, C&C	**More than 55 mm (2.17 in.)**
4WD		**More than 60 mm (2.36 in.)**

If incorrect, troubleshoot the brake system.

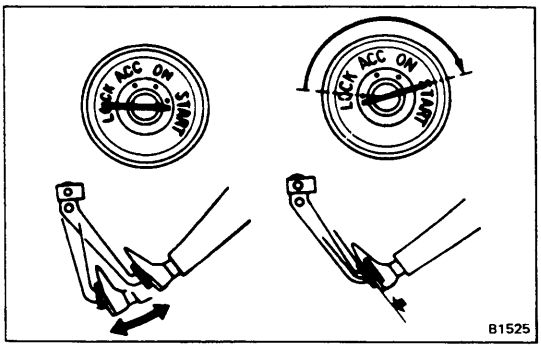

OPERATIONAL TEST OF BRAKE BOOSTER

NOTE: If there is leakage or lack of vacuum, repair ' fore testing.

1. OPERATING CHECK

(a) Depress the brake pedal several times with the engine off, and check that there is no change in the pedal reserve distance.

(b) Depress the brake pedal and start the engine. If the pedal goes down slightly, operation is normal.

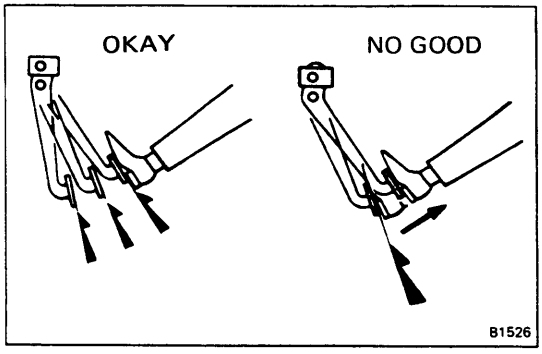

2. AIR TIGHTNESS

(a) Start the engine and stop it after one or two minutes. Depress the brake pedal several times slowly. If the pedal goes down fartherest the first time, but gradually rises after the second or third time, the booster is air tight.

(b) Depress the brake pedal while the engine is running, and stop it with the pedal depressed. If there is no change in pedal reserve travel after holding the pedal for thirty seconds, the booster is air tight.

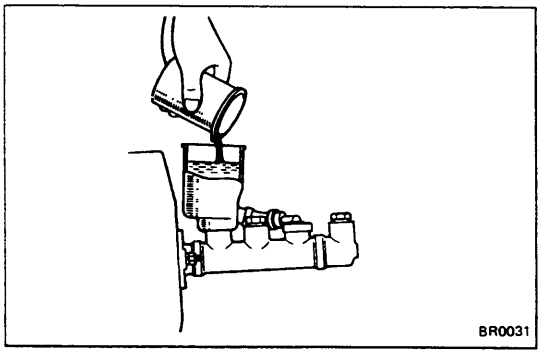

BLEEDING OF BRAKE SYSTEM

NOTE: If any work is done on the brake system or if air is suspected in the brake lines, bleed the system of air

CAUTION: Do not let brake fluid remain on a painted s face. Wash it off immediately.

1. FILL BRAKE RESERVOIRS WITH BRAKE FLUID

Check the reservoir after bleeding each wheel. Add fluid, if necessary.

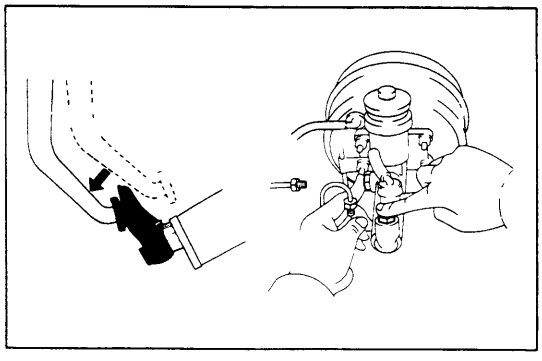

2. BLEED MASTER CYLINDER (FOR 1/2 TON)

NOTE: If the master cylinder was disassembled or if the reservoir tank becomes empty, bleed the air from the master cylinder.

(a) Disconnect the brake tubes from the master cylinder.

(b) Depress the brake pedal and hold it.

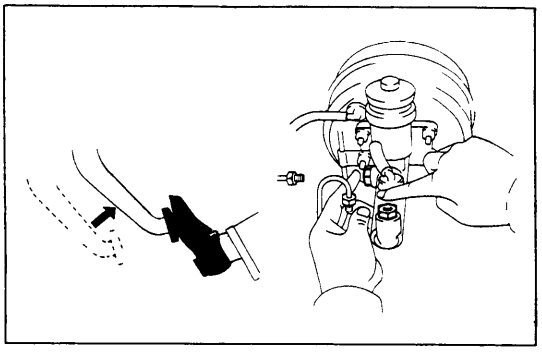

(c) Block off the outlet plug with your finger, and release the brake pedal.

(d) Repeat (b) and (c) three or four times.

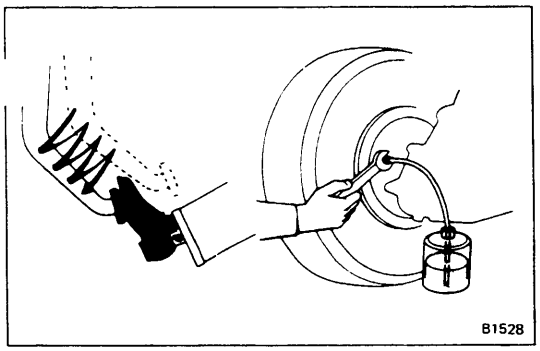
B1528

3. **CONNECT VINYL TUBE TO WHEEL CYLINDER BLEEDER PLUG**

Insert the other end of the tube in a half-full container of brake fluid.

NOTE: Begin air bleeding from the wheel cylinder with the longest hydraulic line.

4. **BLEED BRAKE LINE**

(a) Slowly pump the brake pedal several times.

(b) While having an assistant press on the pedal, loosen the bleeder plug until fluid starts to runout. Then close the bleeder plug.

(c) Repeat this procedure until there are no more air bubbles in the fluid.

Bleeder plug tightening torque:
110 kg-cm (8 ft-lb, 11 N·m)

5. **REPEAT PROCEDURE FOR EACH WHEEL**

6. **BLEED LSP AND BV**

NOTE: The bleeder plug on 4WD vehicles is shaped like a regular bolt.

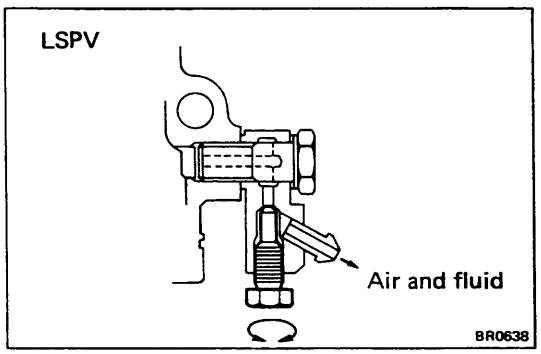

CHECK AND ADJUSTMENT OF PARKING BRAKE

1. **CHECK THAT PARKING BRAKE LEVER TRAVEL IS CORRECT**

Pull the parking brake lever all the way, and count the notches of lever travel.

Lever travel at 20 kg (44.1 lb, 196 N):
2WD 10 — 16 clicks
4WD 7 — 15 clicks

If incorrect, adjust the parking brake.

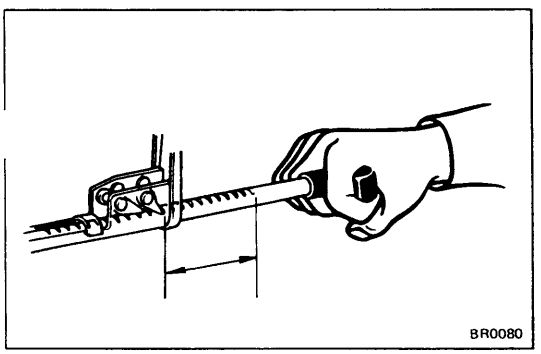
BR0080

2. **IF NECESSARY, ADJUST PARKING BRAKE**

NOTE: Before adjusting the parking brake, make sure that the rear brake shoe clearance has been adjusted.

(2WD)

(a) Tighten the adjusting nut until the travel is correct.

(b) After adjusting the parking brake, confirm that the rear brakes are not dragging.

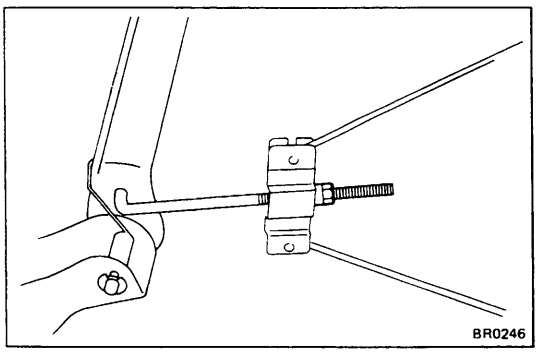
BR0246

(4WD)

(a) Tighten the bellcrank stopper screw until the play of the rear brake links become zero, and then loosen the screw one turn. Tighten the screw lock nut.

(b) Tighten one of the adjusting nuts of the intermediate lever while loosening the other one until the travel is correct. Tighten the two adjusting nuts.

(c) After adjusting the parking brake, confirm that the bellcrank stopper screw comes in contact with the backing plate.

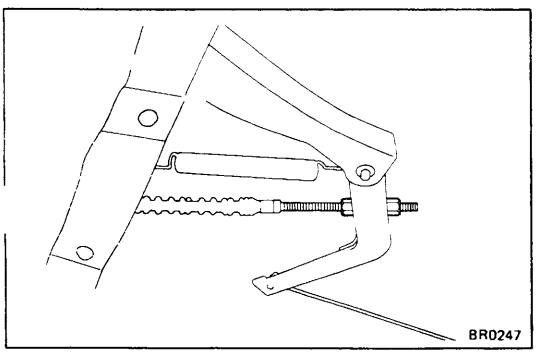
BR0247

MASTER CYLINDER

COMPONENTS

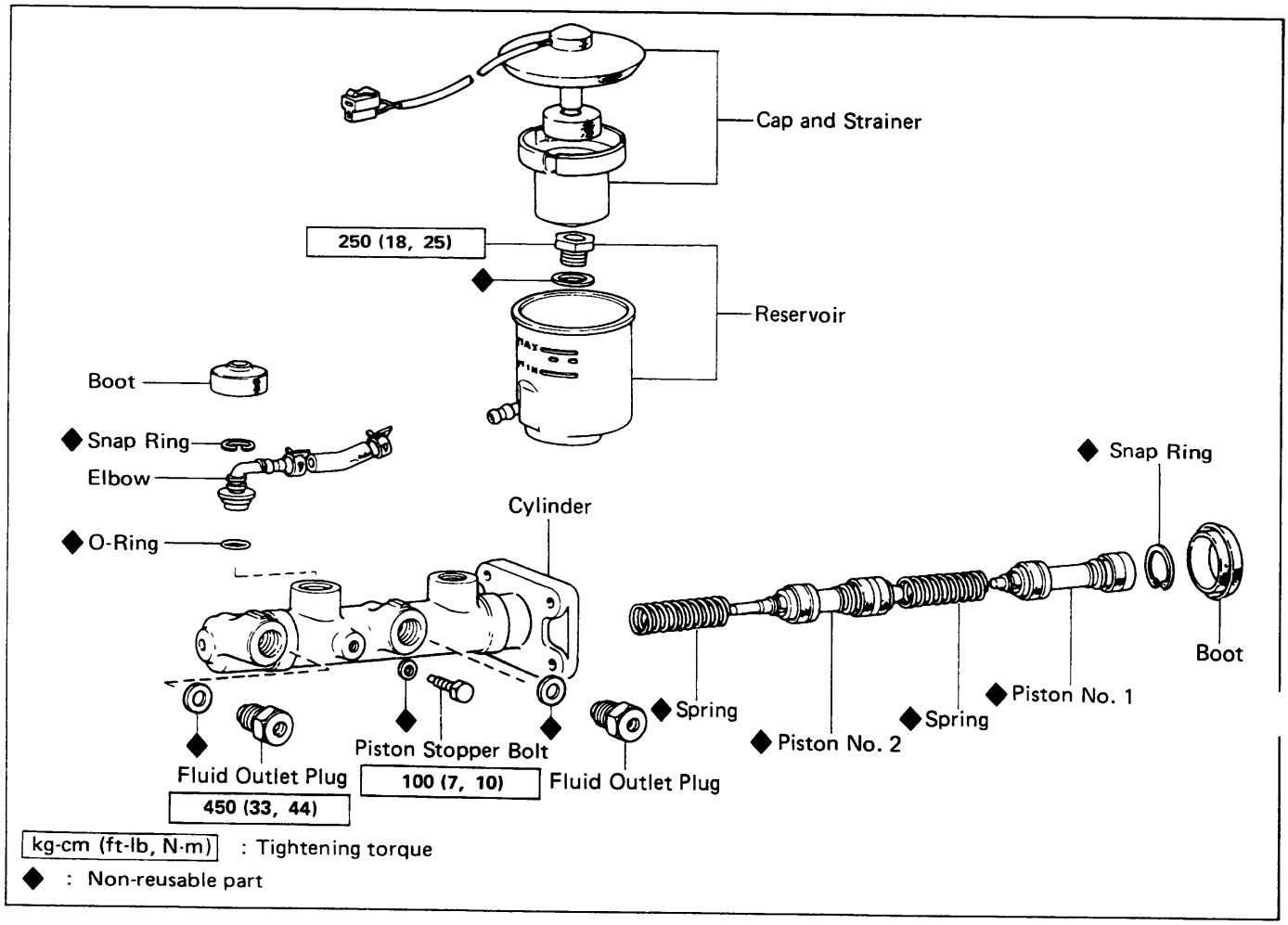

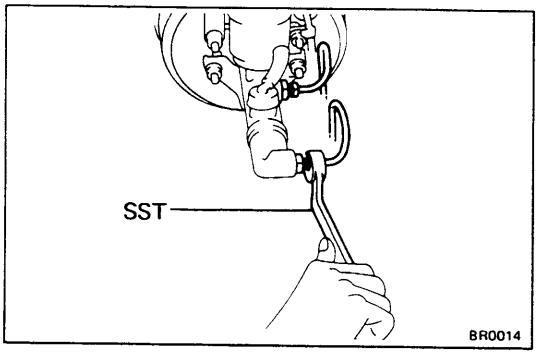

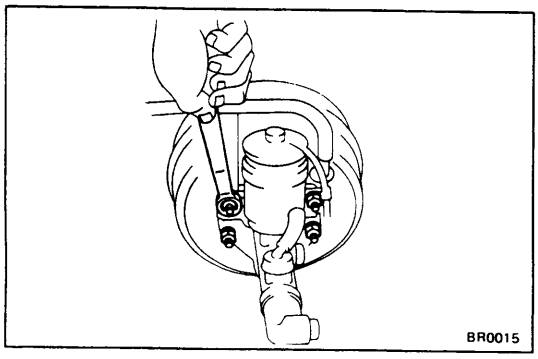

REMOVAL OF MASTER CYLINDER

CAUTION: Do not let brake fluid remain on a painted surface. Wash it off immediately.

1. **DISCONNECT LEVEL WARNING SWITCH CONNECTOR**

2. **DISCONNECT TWO BRAKE TUBES**

   Using SST, disconnect the two brake tubes from the master cylinder.

   SST 09751-36011

3. **REMOVE MASTER CYLINDER**

   (a) Remove the four nuts.

   (b) Remove the master cylinder and gasket from the brake booster.

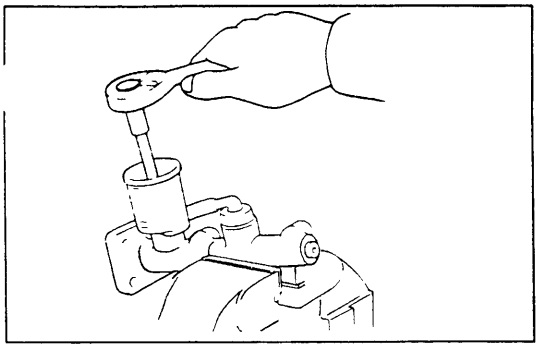

DISASSEMBLY OF MASTER CYLINDER

1. **PLACE CYLINDER IN VISE**
2. **DISCONNECT RESERVOIR AND HOSE**
   Remove the cap, strainer, bolt and hose.
3. **REMOVE SNAP RING AND ELBOW**
4. **REMOVE TWO FLUID OUTLET PLUGS**

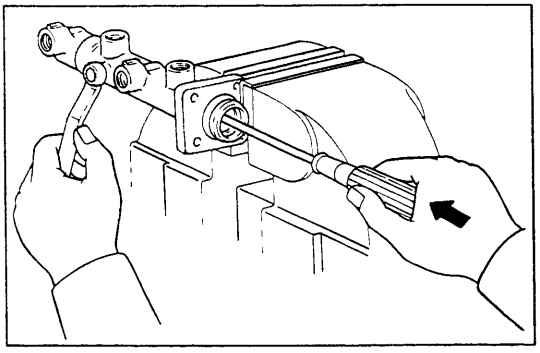

5. **REMOVE PISTON STOPPER BOLT**
   Using a screwdriver, push the pistons in all the way and remove the piston stopper bolt.

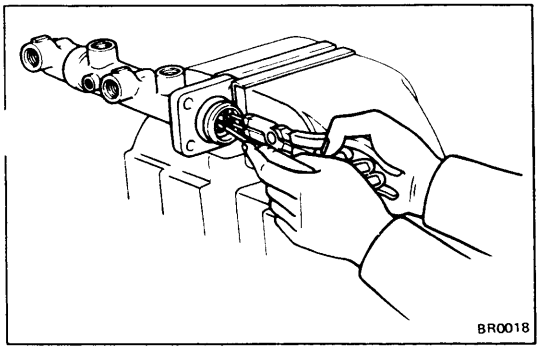

6. **REMOVE TWO PISTONS AND SPRINGS**
   (a) Using snap ring pliers, remove the snap ring.
   (b) Remove the two pistons and springs from the master cylinder.

   NOTE: It may be necessary to inject compressed air in the check valve hole to force out the No. 2 piston.

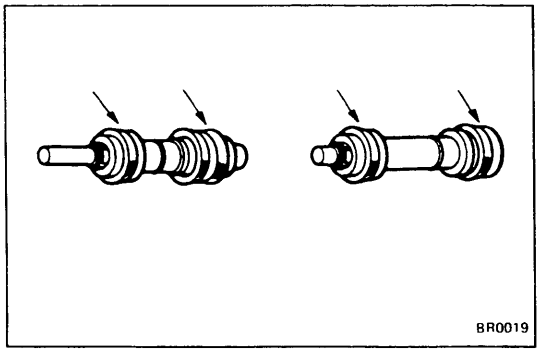

ASSEMBLY OF MASTER CYLINDER

(See page BR-8)

1. **APPLY LITHIUM SOAP BASE GLYCOL GREASE TO RUBBER PARTS OF PISTON**

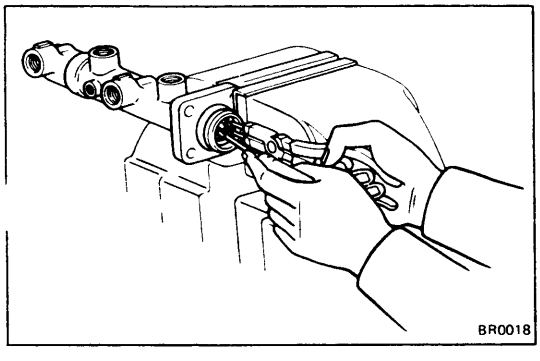

2. **INSTALL TWO SPRINGS AND PISTONS**

   CAUTION: Be careful not to damage the rubber lips on the pistons.

   (a) Insert the two springs and pistons in the master cylinder housing as shown.
   (b) Using snap ring pliers, install the snap ring.

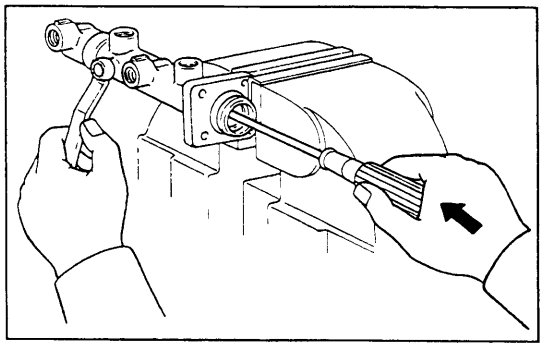

3. **INSTALL PISTON STOPPER BOLT**

Using a screwdriver, push the pistons in all the way and install the piston stopper bolt. Torque the bolt.

Torque: 100 kg-cm (7 ft-lb, 10 N·m)

4. **INSTALL TWO FLUID OUTLET PLUGS**

Torque two plugs.

Torque: 16 mm plug 450 kg-cm (33 ft-lb, 44 N·m)
18 mm plug 685 kg-cm (50 ft-lb, 67 N·m)

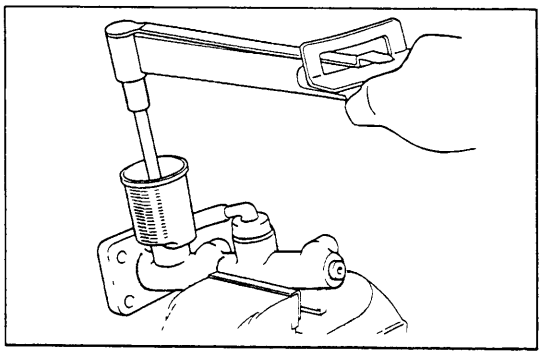

5. **INSTALL RESERVOIR**

(a) Install the reservoir on the master cylinder. Torque the bolt.

Torque: 250 kg-cm (18 ft-lb, 25 N·m)

(b) Install the strainer and cap.

6. **INSTALL ELBOW AND SNAP RING**

7. **CONNECT RESERVOIR HOSE**

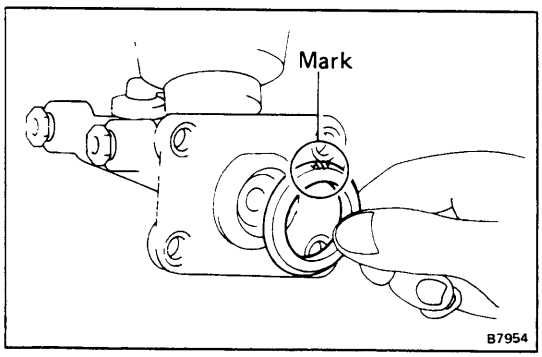

INSTALLATION OF MASTER CYLINDER

(See page BR-8)

1. **CLEAN OUT GROOVE ON LOWER INSTALLATION SURFACE OF MASTER CYLINDER**

2. **CONFIRM THAT "UP" MARK ON MASTER CYLINDER BOOT IS IN CORRECT POSITION**

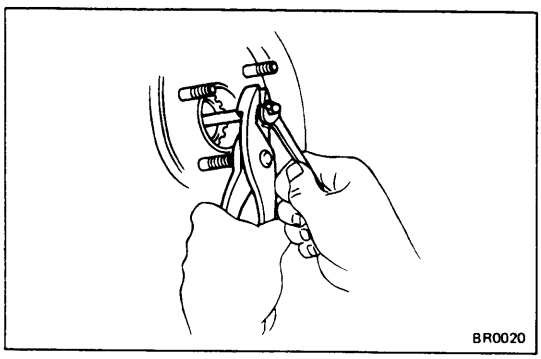

3. **ADJUST LENGTH OF BRAKE BOOSTER PUSH ROD BEFORE INSTALLING MASTER CYLINDER**
(See page BR-12)

4. **INSTALL MASTER CYLINDER**

Install the master cylinder and gasket on the brake booster with four nuts.

Torque: 130 kg-cm (9 ft-lb, 13 N·m)

5. **CONNECT TWO BRAKE TUBES**

Using SST, connect the two brake tubes to the check valves. Torque the nuts.

SST 09751-36011

Torque: 155 kg-cm (11 ft-lb, 15 N·m)

6. **CONNECT LEVEL WARNING SWITCH CONNECTOR**

7. **ADJUST BRAKE PEDAL (See page BR-5)**

8. **FILL BRAKE RESERVOIR WITH BRAKE FLUID AND BLEED BRAKE SYSTEM (See page BR-6)**

BRAKE BOOSTER

REMOVAL OF BRAKE BOOSTER

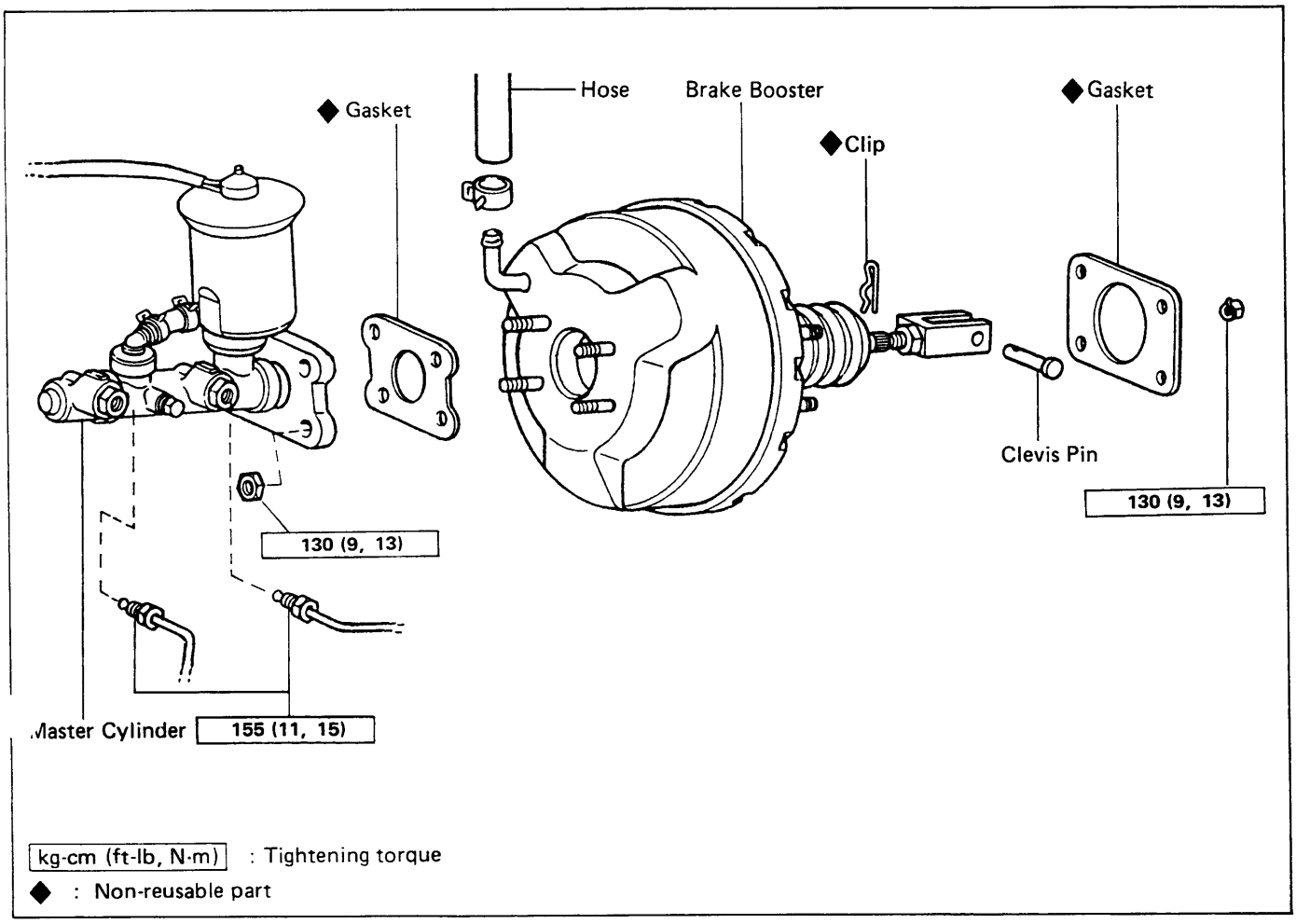

1. **REMOVE MASTER CYLINDER (See page BR-8)**
2. **DISCONNECT VACUUM HOSE FROM BRAKE BOOSTER**
3. **DISCONNECT STOP LIGHT SWITCH CONNECTOR**
4. **REMOVE PEDAL RETURN SPRING**
5. **REMOVE CLIP AND CLEVIS PIN**

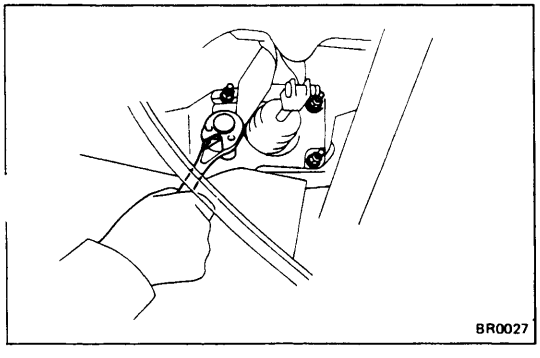

6. **REMOVE BRAKE BOOSTER AND GASKET**

   Remove the four nuts, and pull out the brake booster and gasket.

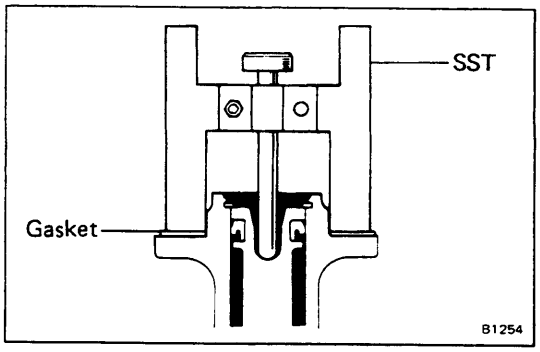

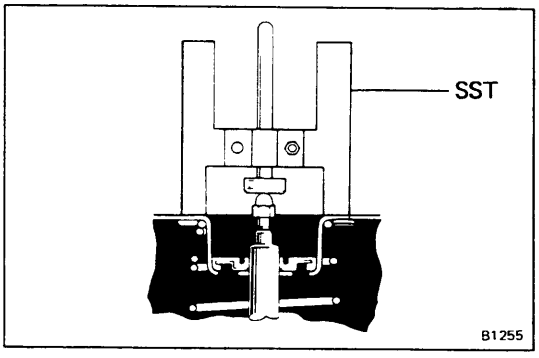

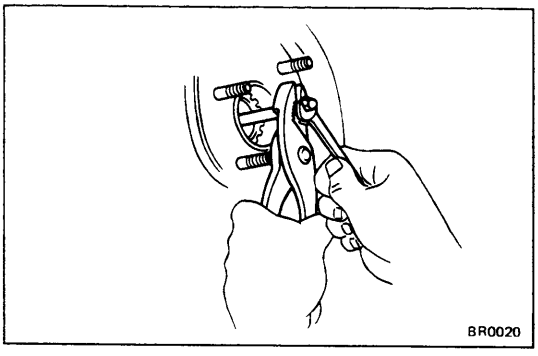

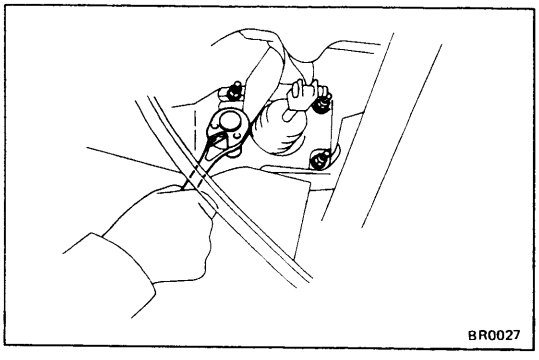

INSTALLATION OF BRAKE BOOSTER

(See page BR-11)

1. **ADJUST LENGTH OF BOOSTER PUSH ROD**

   (a) Set SST on the master cylinder, and lower the pin until its tip slightly touches the piston.

   SST 09737-00010

   NOTE: Take the measurement with the gasket in place.

   (b) Turn SST upside down, and set it on the booster.

   SST 09737-00010

   (c) Adjust the booster push rod length until the push rod lightly touches the pin head.

   Clearance: 0 mm (0 in.)

2. **INSTALL BRAKE BOOSTER AND GASKET**

   Torque: 130 kg-cm (9 ft-lb, 13 N·m)

3. **CONNECT CLEVIS TO BRAKE PEDAL**

   Insert the push rod pin into the clevis and brake pedal and install the clip to the pin.

4. **INSTALL PEDAL RETURN SPRING**

5. **CONNECT STOP LIGHT SWITCH CONNECTOR**

6. **INSTALL MASTER CYLINDER**
   (See page BR-10)

7. **CONNECT HOSE TO BRAKE BOOSTER**

8. **FILL BRAKE RESERVOIR WITH BRAKE FLUID AND BLEED BRAKE SYSTEM** **(See page BR-6)**

9. **CHECK FLUID LEAKAGE**

10. **CHECK AND ADJUST BRAKE PEDAL**
    (See page BR-5)

11. **PERFORM OPERATIONAL CHECK**
    (See page BR-6)

FRONT BRAKE — 2WD (PD60 Type Disc)

COMPONENTS

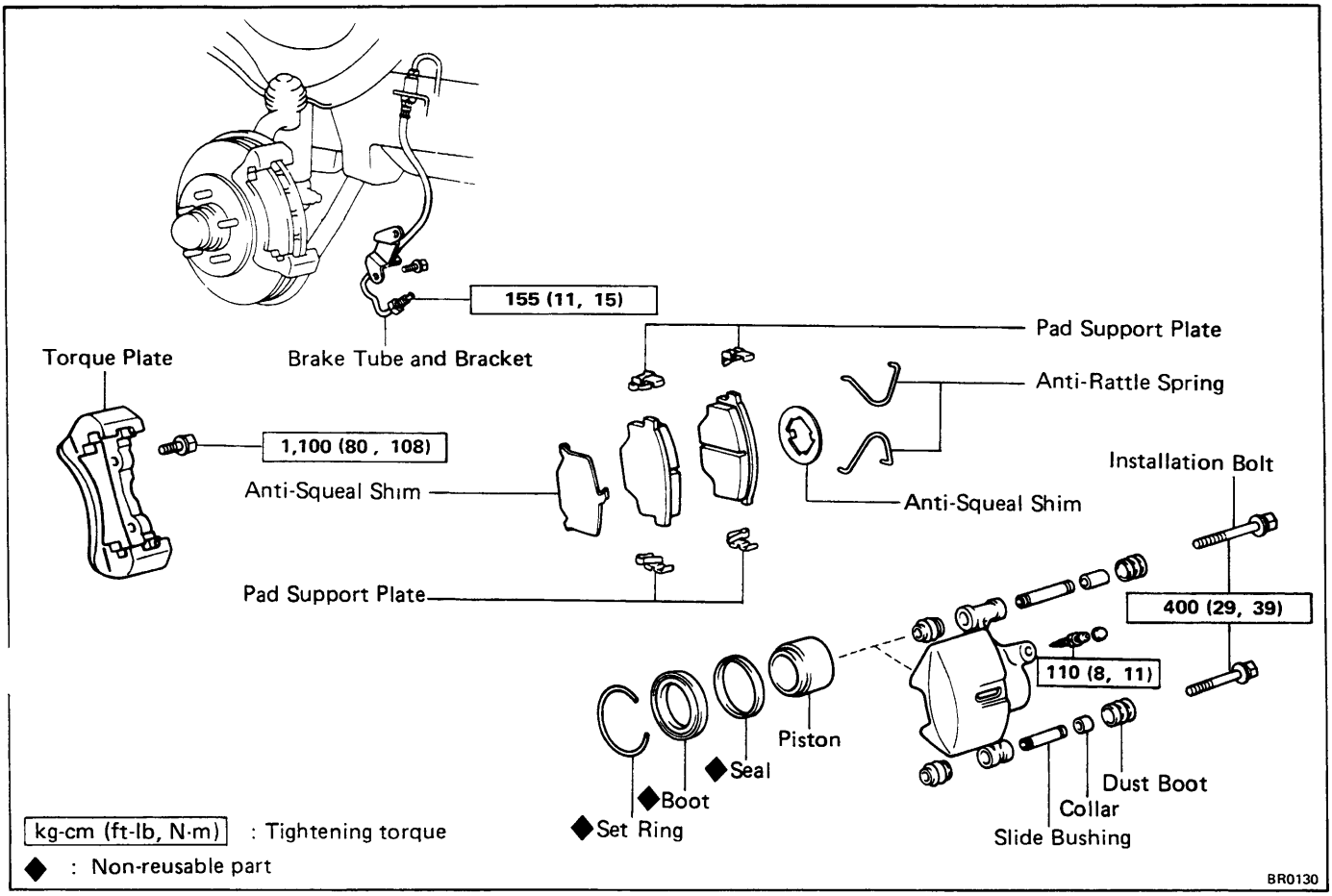

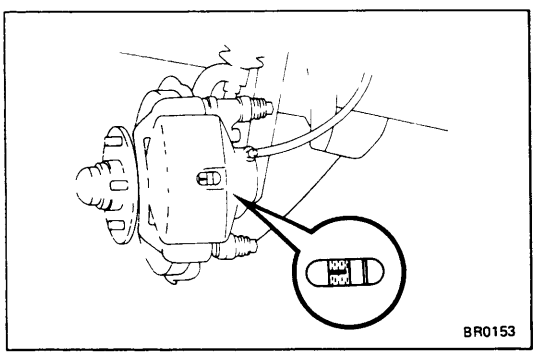

REPLACEMENT OF BRAKE PADS

1. INSPECT PAD LINING THICKNESS

Check the pad thickness through the cylinder inspection hole and replace pads if not within specification.

Minimum thickness: 1.0 mm (0.039 in.)
Standard thickness: 10.0 mm (0.394 in.)

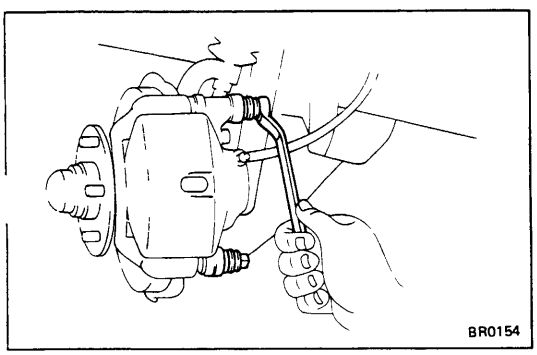

2. REMOVE CYLINDER FROM TORQUE PLATE

(a) Remove the two installation bolts from the torque plate.

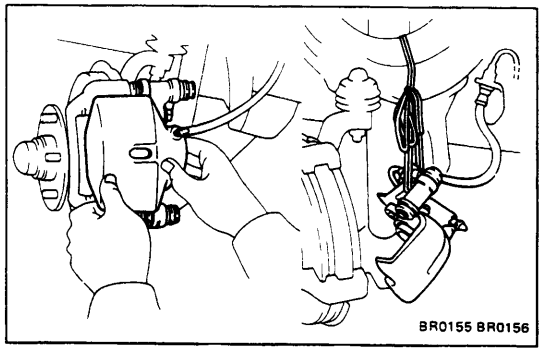
BR0155 BR0156

(b) Remove the brake cylinder and suspend it so the hose is not stretched.

NOTE: Do not disconnect the brake hose.

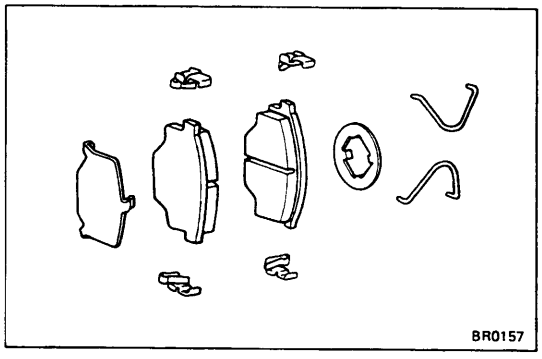
BR0157

3. REMOVE FOLLOWING PARTS:

(a) Two anti-rattle springs
(b) Two brake pads
(c) Anti-squeal shims
(d) Four support plates

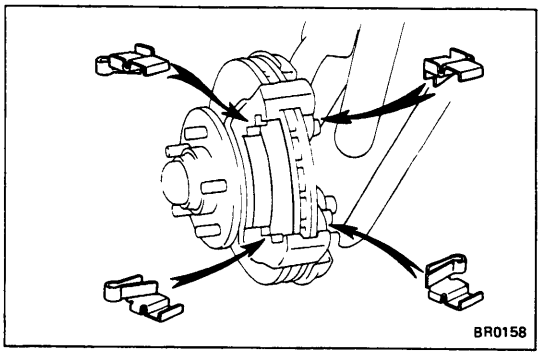
BR0158

4. CHECK ROTOR DISC THICKNESS
(See step 2 on page BR-16)

5. CHECK ROTOR DISC RUNOUT
(See step 3 on page BR-17)

6. INSTALL NEW PAD SUPPORT PLATES

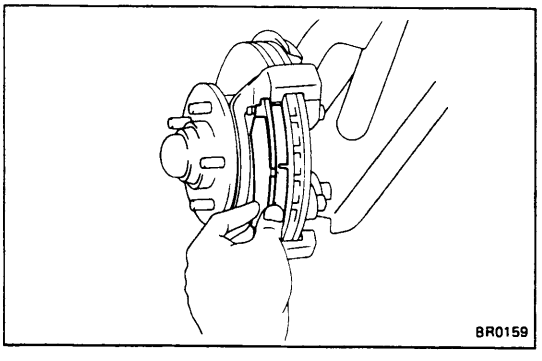
BR0159

7. INSTALL NEW PADS

CAUTION: Do not allow oil or grease to get on the rubbing face.

(a) Install a new anti-squeal shim toward the backside of the outside pad.
(b) Install the pads onto each support plate.

8. INSTALL ANTI-RATTLE SPRINGS

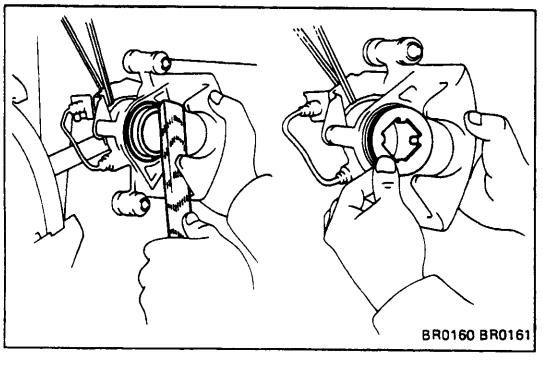
BR0160 BR0161

9. INSTALL CYLINDER

(a) Draw out a small amount of brake fluid from the reservoir.
(b) Press in piston with a hammer handle or such.

NOTE: Always change the pad on one wheel at a time as there is possibility of the opposite piston flying out.

(c) Assemble the anti-squeal shim to the piston.

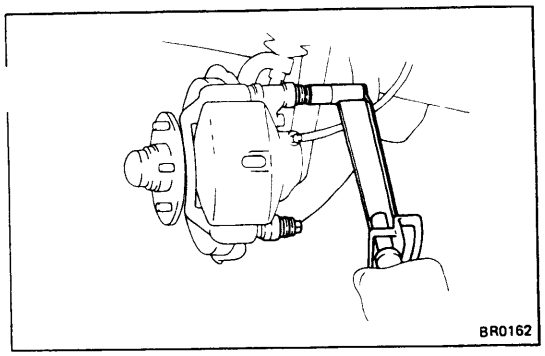

(d) Insert the brake cylinder carefully so the dust boot is not wedged.

(e) Install and torque the two mount bolts.

Torque: 400 kg-cm (29 ft-lb, 39 N·m)

10. CHECK THAT FLUID LEVEL IS MAX AT LINE

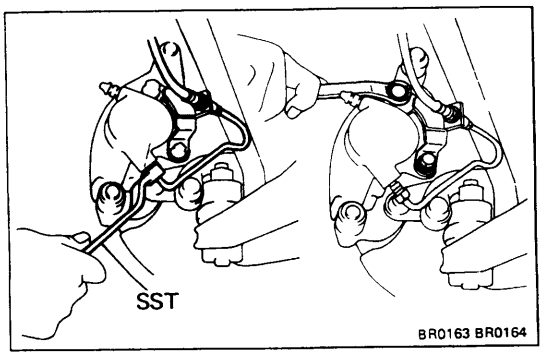

REMOVAL OF CYLINDER

(See page BR-13)

1. DISCONNECT BRAKE LINE

(a) Using SST, disconnect the brake line. Use a container to catch the brake fluid.

SST 09751-36011

(b) Remove the bracket from the cylinder.

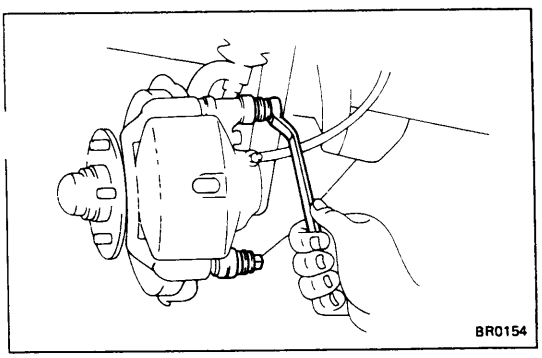

2. REMOVE CYLINDER

Remove the two installation bolts and cylinder.

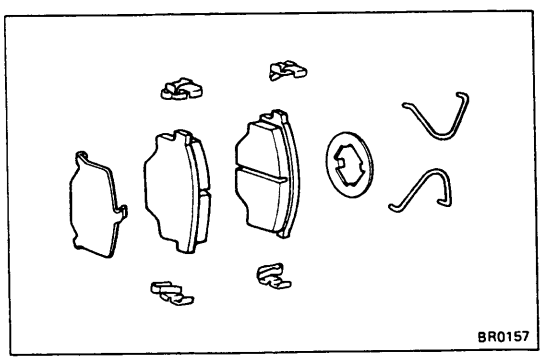

3. REMOVE ANTI-RATTLE SPRINGS

4. REMOVE BRAKE PADS

5. REMOVE ANTI-SQUEAL SHIMS

6. REMOVE SUPPORT PLATES

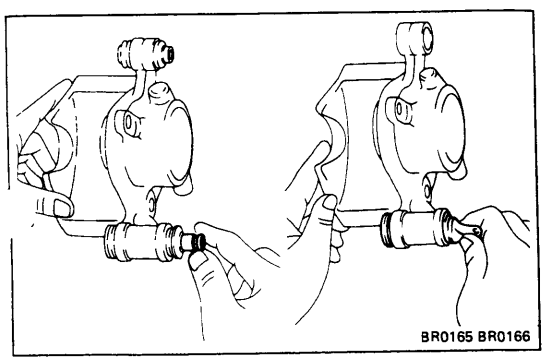

DISASSEMBLY OF CYLINDER

(See page BR-13)

1. REMOVE FOLLOWING PARTS:

(a) Two cylinder slide bushings

(b) Four dust boots

(c) Two collars

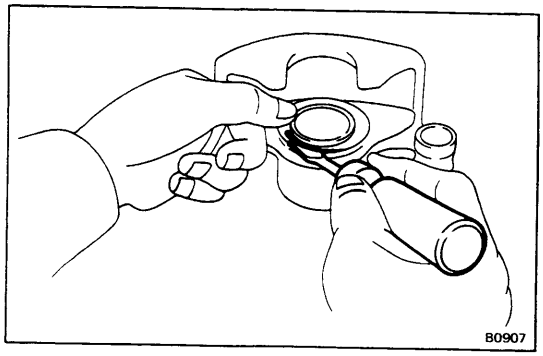

2. REMOVE CYLINDER BOOT SET RING AND BOOT

Using a screwdriver, remove the cylinder boot set ring and boot.

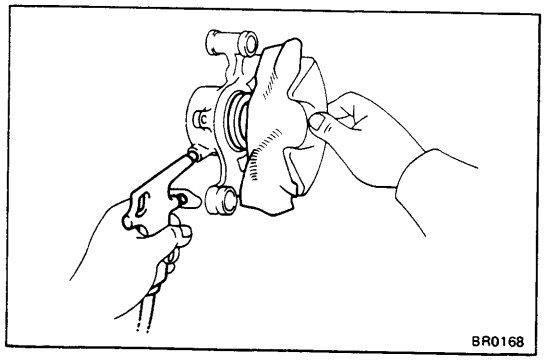

3. REMOVE PISTON FROM CYLINDER

(a) Put a piece of cloth or such between the piston and cylinder.

(b) Use compressed air to remove the piston from the cylinder.

WARNING: Do not place your fingers in front of the piston when using compressed air.

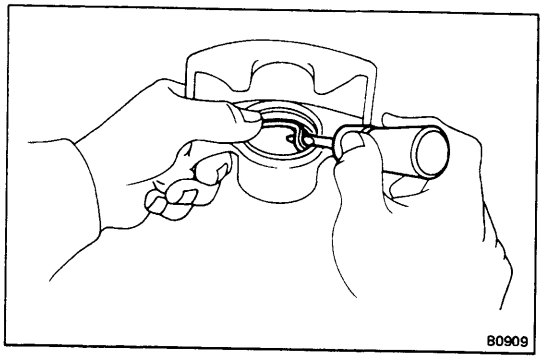

4. REMOVE PISTON SEAL FROM BRAKE CYLINDER

Using a screwdriver, remove the piston seal.

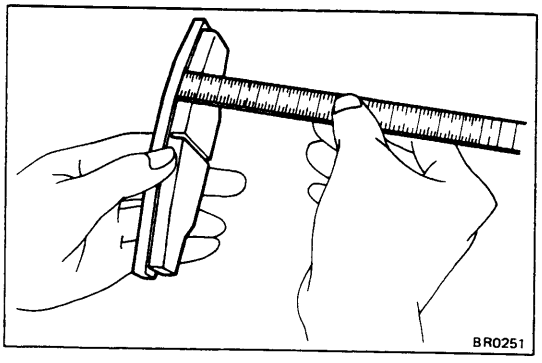

INSPECTION AND REPAIR OF FRONT BRAKE COMPONENTS

1. MEASURE PAD LINING THICKNESS

Minimum thickness: 1.0 mm (0.039 in.)
Standard thickness: 10.0 mm (0.394 in.)

Replace the pad if the thickness is less than the minimum (the 1.0 mm slit is no longer visible)or if it shows sign of uneven wear.

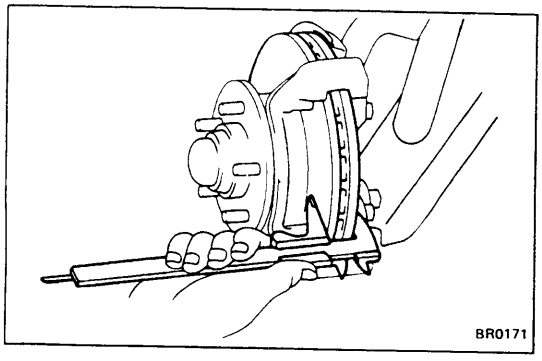

2. MEASURE ROTOR DISC THICKNESS

Minimum thickness: 24.0 mm (0.945 in.)
Standard thickness: 25.0 mm (0.984 in.)

If the disc is scored or worn, or if thickness is less than minimum, repair or replace the disc.

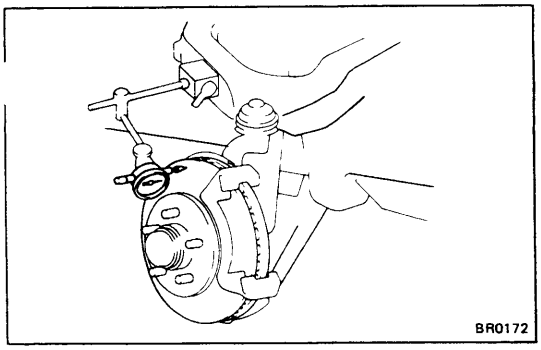

3. MEASURE ROTOR DISC RUNOUT

Measure the rotor disc runout at 10 mm (0.39 in.) from the outer edge of the rotor disc.

Maximum disc runout: 0.15 mm (0.0059 in.)

If the runout is greater than the maximum, replace the disc.

NOTE: Before measuring the runout, confirm that the front bearing play is within specification.

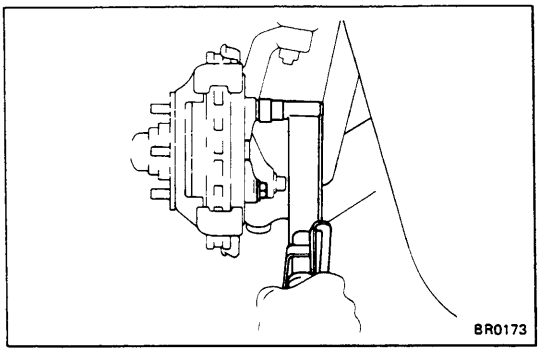

4. IF NECESSARY, REPLACE ROTOR DISC

(a) Remove the torque plate from the knuckle.

(b) Remove the axle hub. (See page FA-7)

(c) Remove the disc from the axle hub.

(d) Install a new rotor disc. Torque the bolts.

Torque: 650 kg-cm (47 ft-lb, 64 N·m)

(e) Install the axle hub and adjust the front bearing preload. (See page FA-8)

(f) Install the torque plate onto the knuckle.

Torque: 1,100 kg-cm (80 ft-lb, 108 N·m)

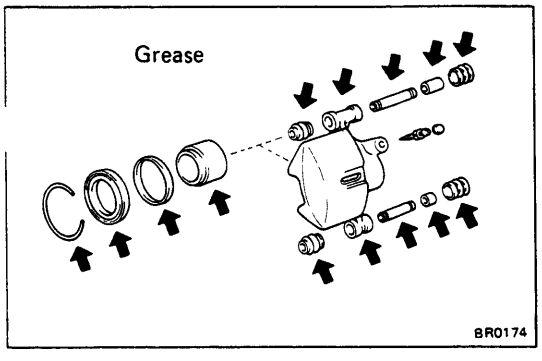

ASSEMBLY OF CYLINDER

(See page BR-13)

1. APPLY LITHIUM SOAP BASE GLYCOL GREASE TO PARTS INDICATED BY ARROWS

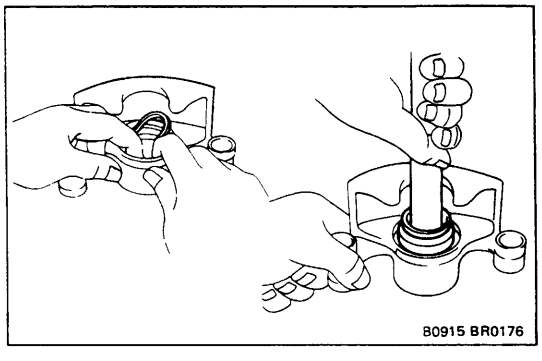

2. INSTALL PISTON SEAL AND PISTON IN CYLINDER

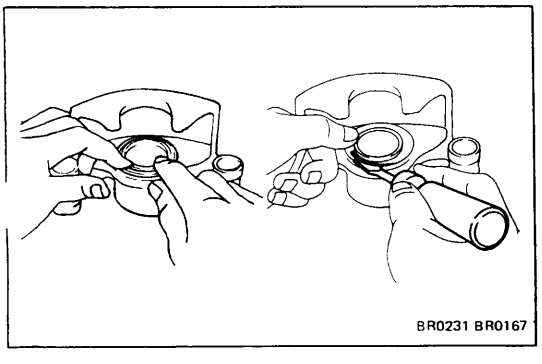

3. INSTALL CYLINDER BOOT AND SET RING IN CYLINDER

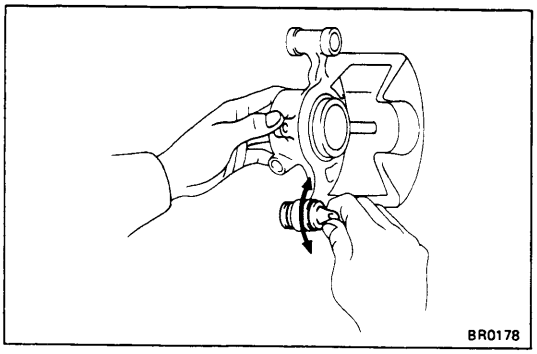

4. **INSTALL COLLAR, DUST BOOT AND CYLINDER SLIDE BUSHING**
   (a) Install the collar and dust boots to the brake cylind.
   (b) Insure that the boots are secured firmly to each brake cylinder groove.

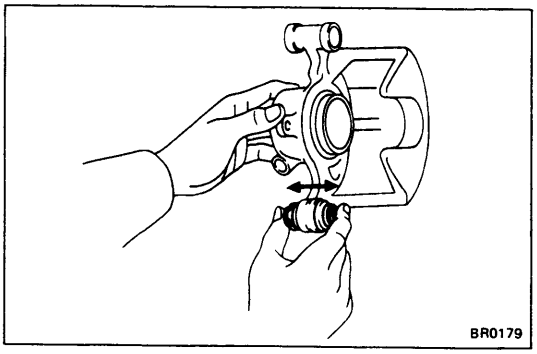

   (c) Install the bushing into the boots.
   (d) Insure that the boots are secured firmly to each bushing groove.

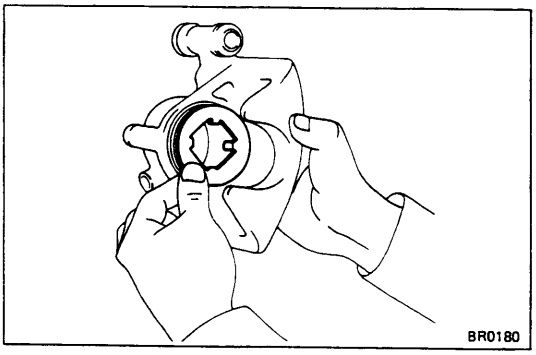

INSTALLATION OF CYLINDER

(See page BR-13)

1. **INSTALL ANTI-SQUEAL SHIM TO PISTON**
2. **INSTALL PADS ANTI-RATTLE SPRINGS AND PAD SUPPORT PLATES (See steps 6 to 8 on page BR-14)**
3. INSTALL CYLINDER
   (See step 9 on pages BR-14, 15)

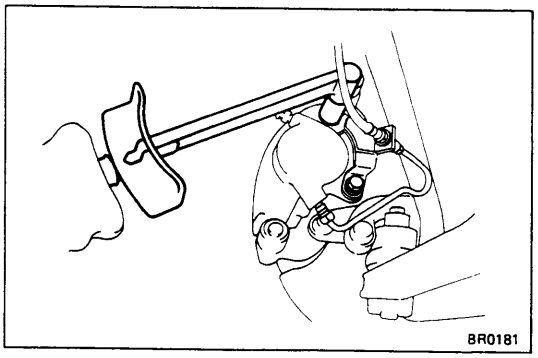

4. **INSTALL BRACKET TO CYLINDER**
   Torque: 185 kg-cm (13 ft-lb, 18 N·m)

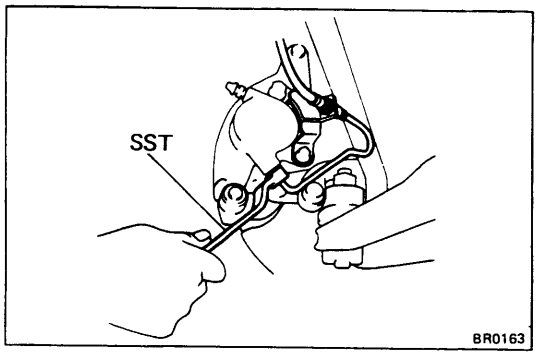

5. **CONNECT BRAKE LINE**
   Using SST, connect the brake line.
   SST 09751-36011
   Torque: 155 kg-cm (11 ft-lb, 15 N·m)
6. **FILL BRAKE RESERVOIR WITH BRAKE FLUID AND BLEED BRAKE SYSTEM (See page BR-6)**
7. **CHECK FOR FLUID LEAKAGE**

FRONT BRAKE—2WD (FS17 Type Disc)

COMPONENTS

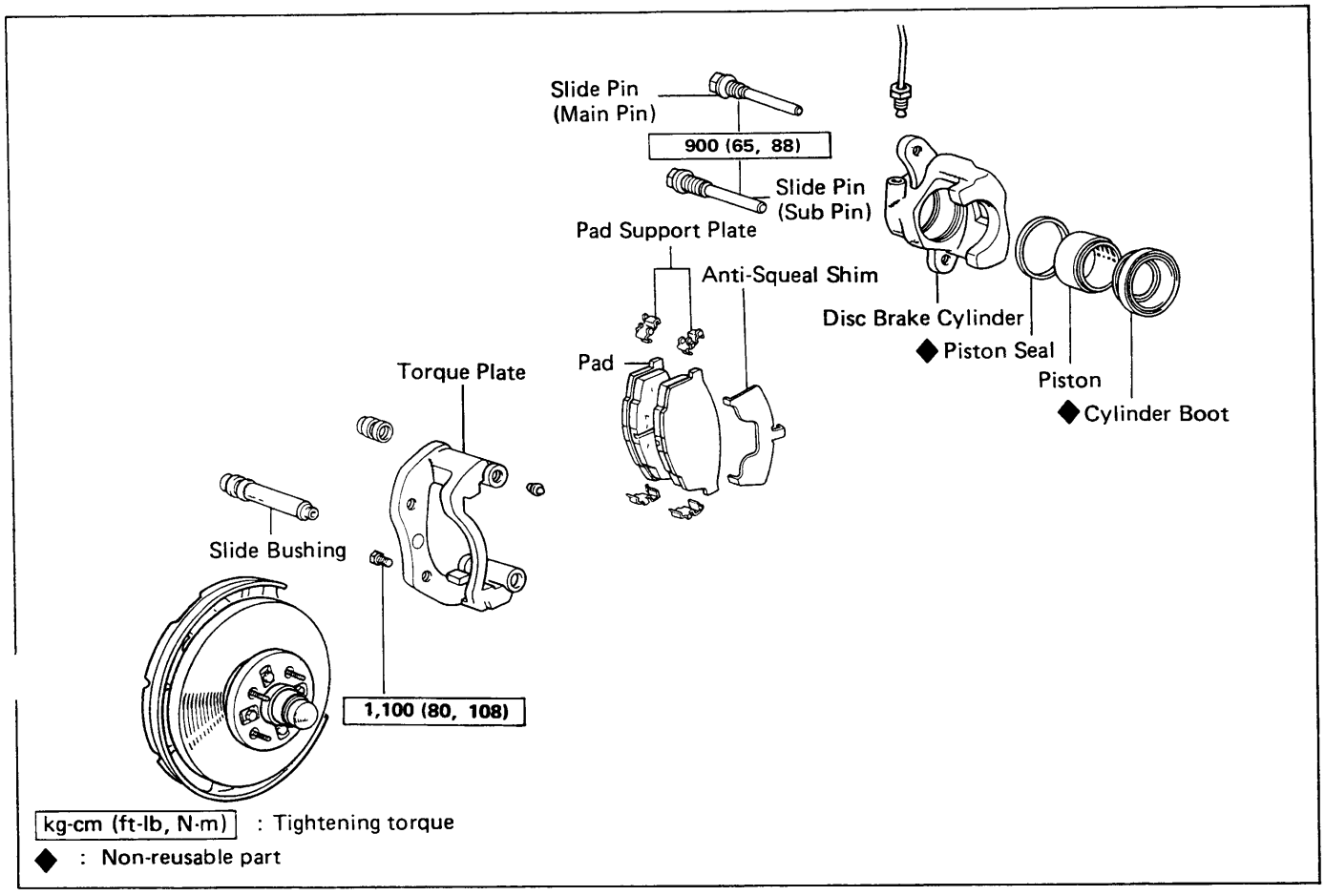

REPLACEMENT OF BRAKE PADS

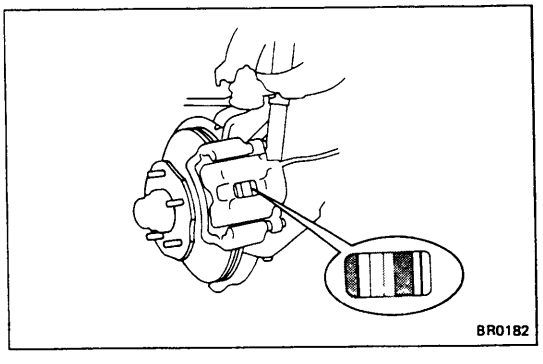

1. INSPECT PAD LINING THICKNESS

Check the pad thickness through the cylinder inspection hole and replace the pads if not within specification.

Minimum thickness: 1.0 mm (0.039 in.)
Standard thickness: 10.0 mm (0.394 in.)

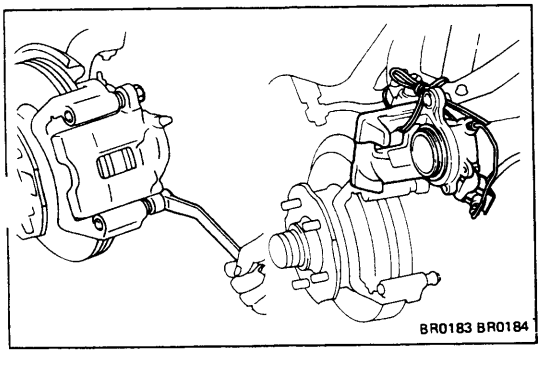

2. REMOVE CYLINDER SLIDE PIN ON SUB PIN SIDE

(a) Remove the cylinder slide pin on the sub pin side.

(b) Lift up the cylinder and support it.

NOTE:

(1) Do not remove the cylinder slide pin on the main side unless necessary.

(2) Do not disconnect the brake hose.

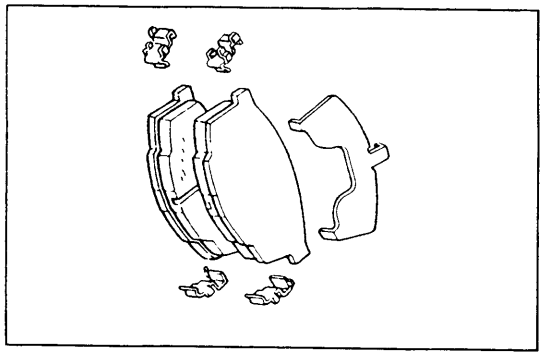

3. **REMOVE FOLLOWING PARTS:**
   (a) Two brake pads
   (b) Anti-squeal shim
   (c) Four support plates

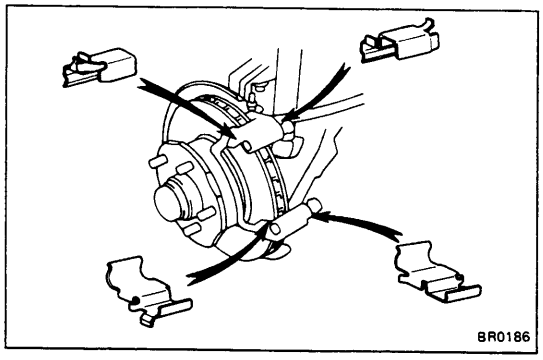

4. **CHECK ROTOR DISC THICKNESS**
   (See step 2 on page BR-22)

5. **CHECK ROTOR DISC RUNOUT**
   (See step 3 on page BR-22)

6. **INSTALL NEW PAD SUPPORT PLATES**

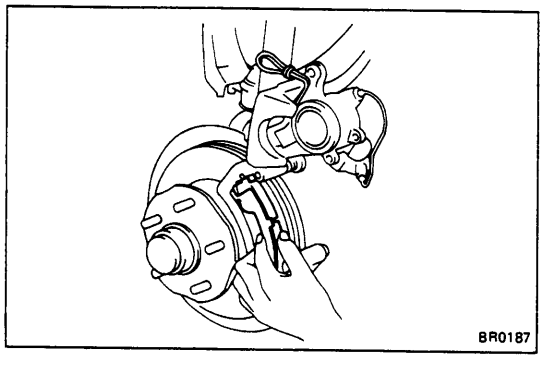

7. **INSTALL NEW PADS**

   CAUTION: Do not allow oil or grease to get on the rubbing face.

   (a) Install a new anti-squeal shim toward the backside the outside pad.
   (b) Install the pads onto each support plate.

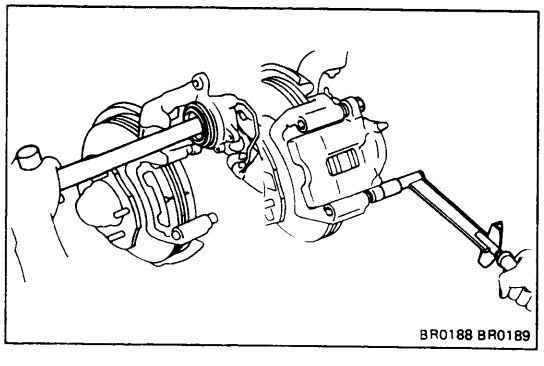

8. **INSTALL CYLINDER**
   (a) Draw out a small amount of brake fluid from the reservoir.
   (b) Press in piston with a hammer handle or such.

   NOTE: Always change the pad on one wheel at a time as there is possibility of the opposite piston flying out.

   (c) Insert the brake cylinder carefully so the dust boot is not wedged.
   (d) Install and torque the slide pin on the sub pin side.

   Torque: 900 kg-cm (65 ft-lb, 88 N·m)

   NOTE:
   (1) Confirm the condition of the cylinder side bushing boot and pull on the boot to relieve the air from the cylinder side pin mounting area.
   (2) Confirm that the hole plug on the main pin side is installed and push on the center of the plug to relieve the air from the inner portion of the main pin.

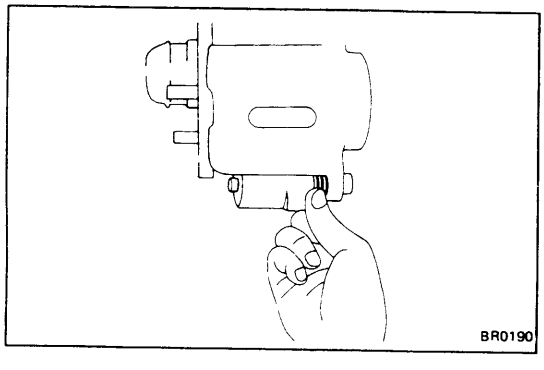

9. **CHECK THAT FLUID LEVEL IS AT MAX LINE**

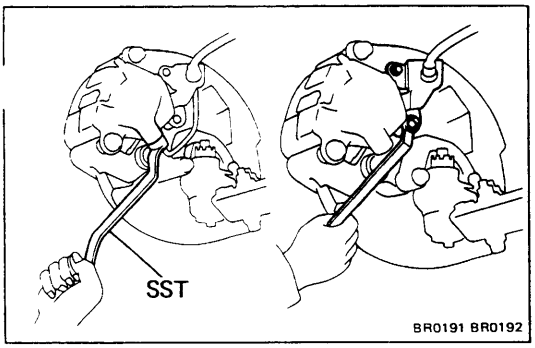

REMOVAL OF CYLINDER

(See page BR-19)

1. **DISCONNECT BRAKE LINE**
   (a) Using SST, disconnect the brake line.
   Use a container to catch the brake fluid.
   SST 09751-36011
   (b) Remove the bracket from the cylinder.

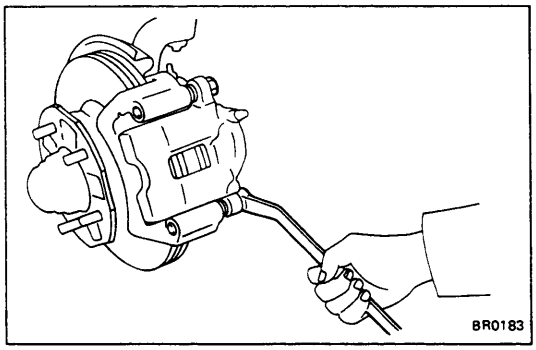

2. **REMOVE CYLINDER**
   Remove the two slide pins and cylinder.

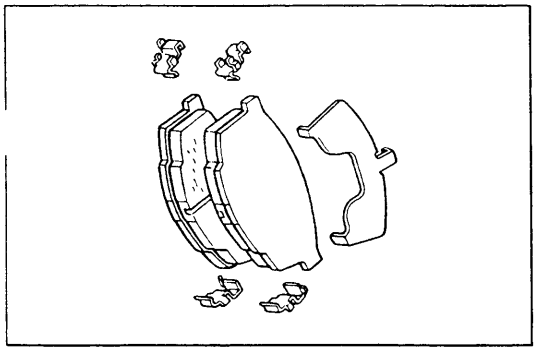

3. **REMOVE BRAKE PADS**
4. **REMOVE ANTI-SQUEAL SHIM**
5. **REMOVE SUPPORT PLATES**

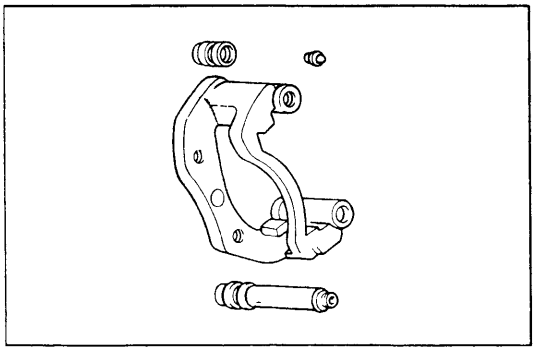

6. **IF NECESSARY, REMOVE FOLLOWING PARTS:**
   (a) Slide bushing
   (b) Pin boots

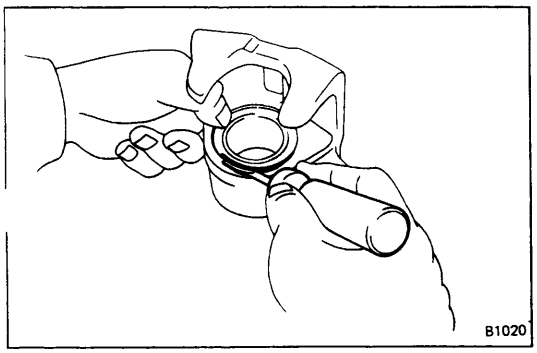

DISASSEMBLY OF CYLINDER

(See page BR-19)

1. **REMOVE CYLINDER BOOT SET RING AND BOOT**
   Using a screwdriver, remove the cylinder boot set ring and boot.

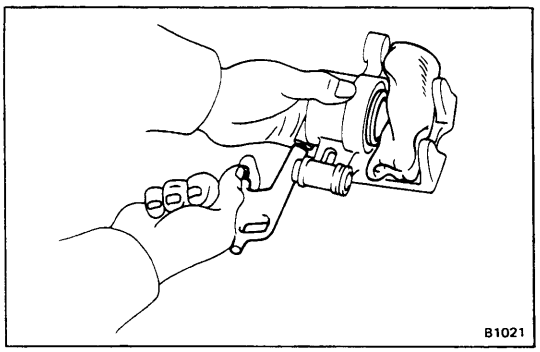

2. REMOVE PISTON FROM CYLINDER

(a) Put a piece of cloth or such between the piston and cylinder.

(b) Use compressed air to remove the piston from the cylinder.

WARNING: Do not place your fingers in front of the piston when using compressed air.

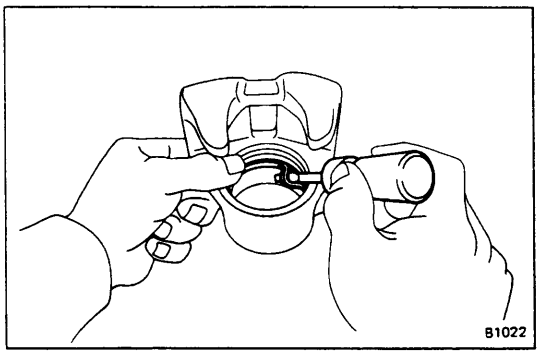

3. REMOVE PISTON SEAL FROM BRAKE CYLINDER

Using a screwdriver, remove the piston seal.

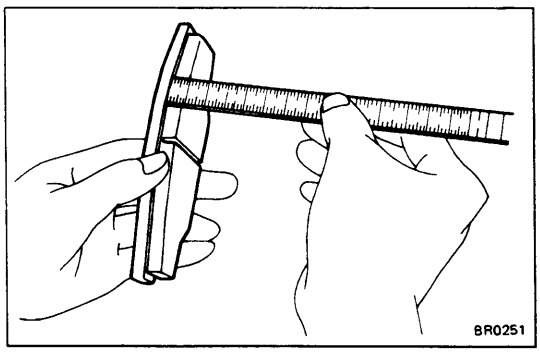

INSPECTION AND REPAIR OF FRONT BRAKE COMPONENTS

1. MEASURE PAD LINING THICKNESS

Minimum thickness: 1.0 mm (0.039 in.)
Standard thickness: 10.0 mm (0.394 in.)

Replace the pad if the thickness is less than the minimum (the 1.0 mm slit is no longer visible) or if it shows sign of uneven wear.

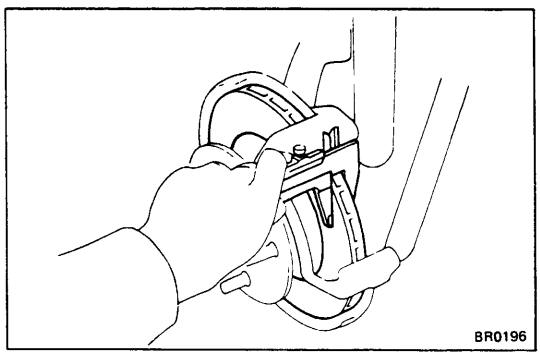

2. MEASURE ROTOR DISC THICKNESS

Minimum thickness: 21.0 mm (0.827 in.)
Standard thickness: 22.0 mm (0.866 in.)

If the disc thickness is less than minimum, replace the disc.

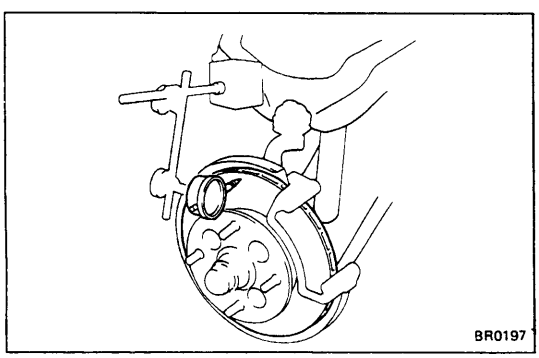

3. MEASURE ROTOR DISC RUNOUT

Measure the rotor disc runout at 10 mm (0.39 in.) from the outer edge of rotor disc.

Maximum disc runout: 0.15 mm (0.0059 in.)

If the runout is greater than the maximum, replace the disc.

NOTE: Make sure the front bearing is adjusted correc before measuring the slit.

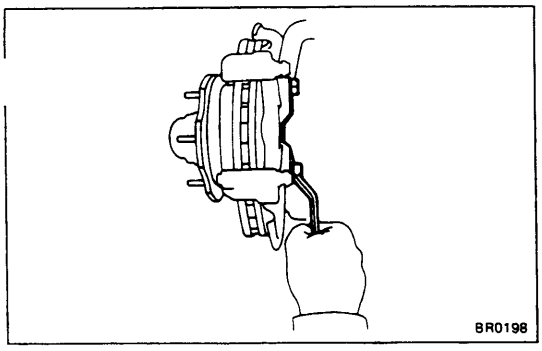

4. IF NECESSARY, REPLACE ROTOR DISC

(a) Remove the torque plate from the knuckle.

(b) Remove the axle hub. (See page FA-7)

(c) Remove the disc from the axle hub.

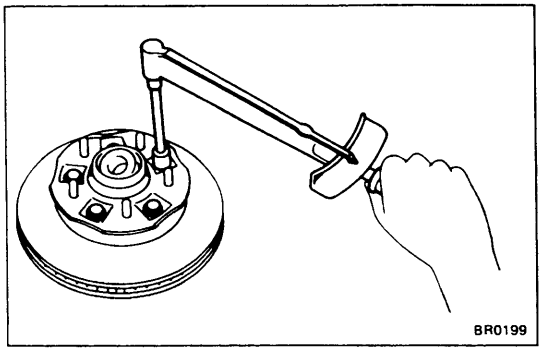

(d) Install a new rotor disc. Torque the bolts.

Torque: 650 kg-cm (47 ft-lb, 64 N·m)

(e) Install the axle hub and adjust the front bearing preload. (See page FA-8)

(f) Install the torque plate onto the knuckle.

Torque: 1,100 kg-cm (80 ft-lb, 108 N·m)

ASSEMBLY OF CYLINDER

(See page BR-19)

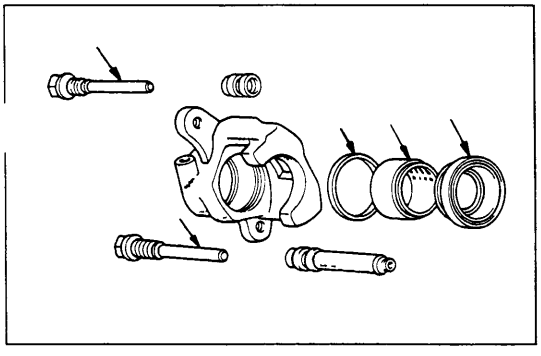

1. APPLY LITHIUM SOAP BASE GLYCOL GREASE TO PARTS INDICATED BY ARROWS

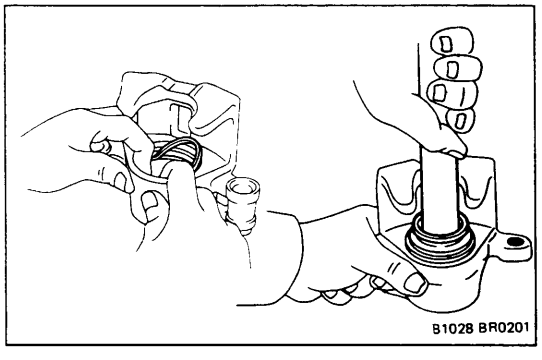

2. INSTALL PISTON SEAL AND PISTON IN CYLINDER

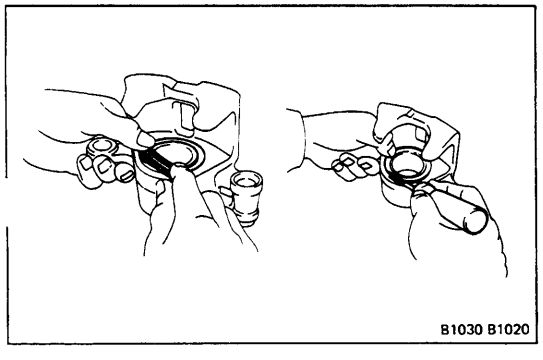

3. INSTALL CYLINDER BOOT AND SET RING IN CYLINDER

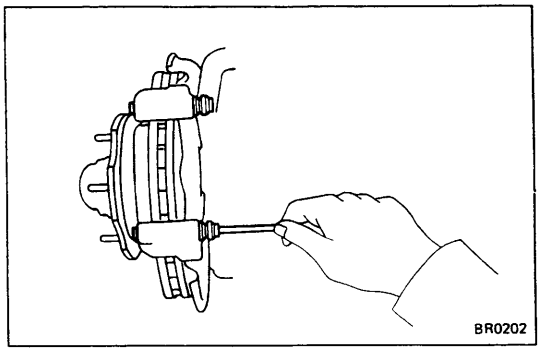

4. **INSTALL PIN BOOTS AND SLIDE BUSHING**
   (a) Install the pin boots to the torque plate of the main pin side.
   (b) Using a plastic bar, install the slide bushing into the torque plate of the sub pin side.

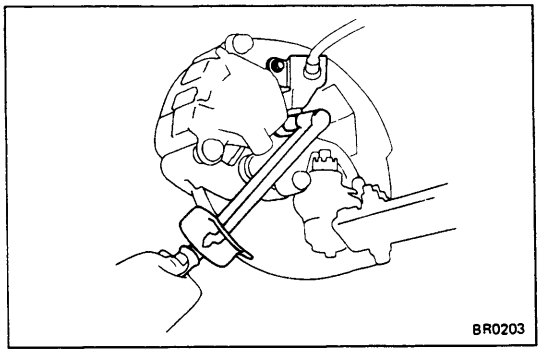

INSTALLATION OF CYLINDER

(See page BR-13)

1. **INSTALL PADS (See step 7 on page BR-20)**
2. **INSTALL CYLINDER**
   (See step 8 on page BR-20)
3. **INSTALL BRACKET TO CYLINDER**
   Torque: 185 kg-cm (13 ft-lb, 18 N·m)

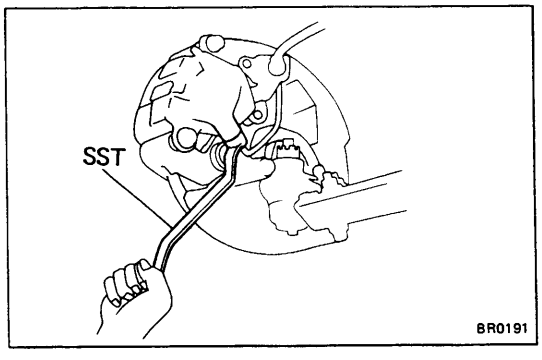

4. **CONNECT BRAKE LINE**
   Using SST, connect the brake line.
   SST 09751-36011
   Torque: 155 kg-cm (11 ft-lb, 15 N·m)
5. **FILL BRAKE RESERVOIR WITH BRAKE FLUID AND BLEED BRAKE SYSTEM (See page BR-6)**
6. **CHECK FOR FLUID LEAKAGE**

FRONT BRAKE—4WD (S12+8 Type Disc)

COMPONENTS

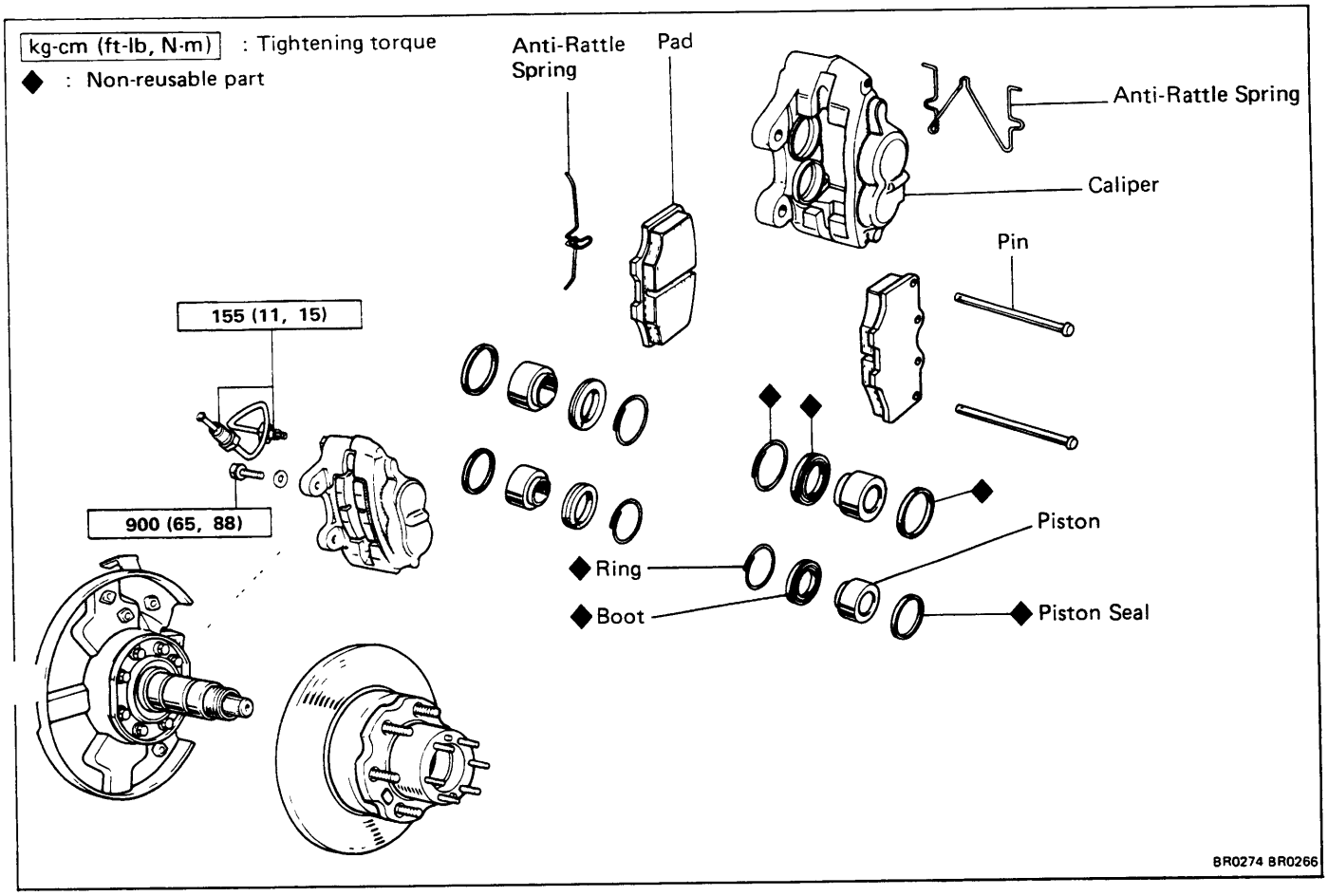

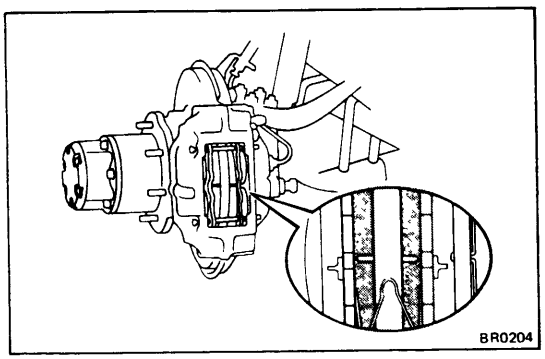

REPLACEMENT OF BRAKE PADS

1. INSPECT PAD LINING THICKNESS

Check the pad thickness through the cylinder inspection hole and replace pads if not within specification.

Minimum thickness: 1.0 mm (0.039 in.)
Standard thickness: 9.7 mm (0.382 in.)

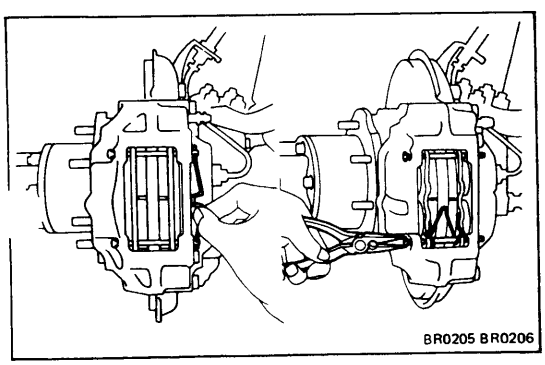

2. REMOVE FOLLOWING PARTS:

(a) Anti-rattle clip
(b) Two anti-rattle pins
(c) Anti-rattle spring
(d) Two pads

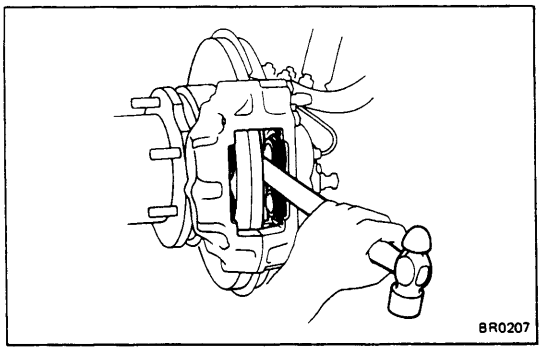

3. **CHECK ROTOR DISC THICKNESS**
(See step 2 on page BR-28)

4. **CHECK ROTOR DISC RUNOUT**
(See step 3 on page BR-28)

5. **INSTALL NEW PADS**

CAUTION: Do not allow oil or grease to get on the rubbing face.

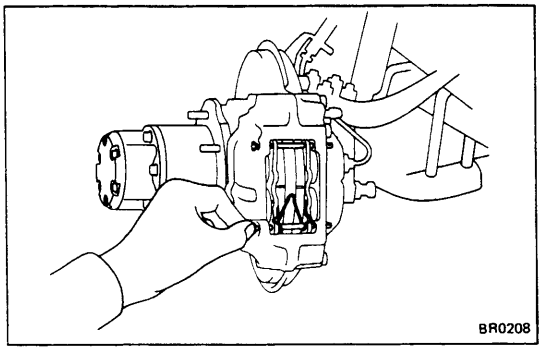

6. **INSTALL ANTI-RATTLE SPRING**

7. **INSTALL TWO ANTI-RATTLE SPRING PINS**

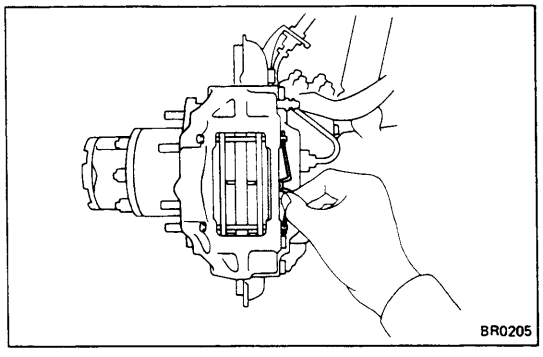

8. **INSTALL ANTI-RATTLE SPRING**

REMOVAL OF CYLINDER

(See page BR-25)

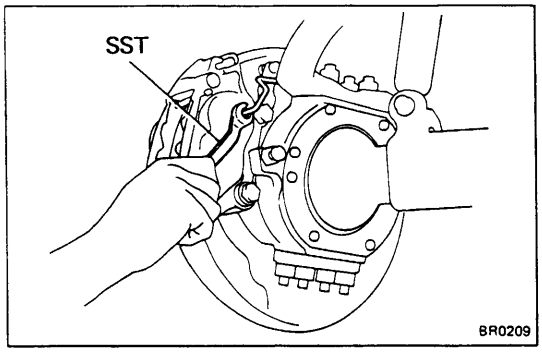

1. **DISCONNECT BRAKE LINE**

Using SST, disconnect the brake line.
Use a container to catch the brake fluid.
SST 09751-36011

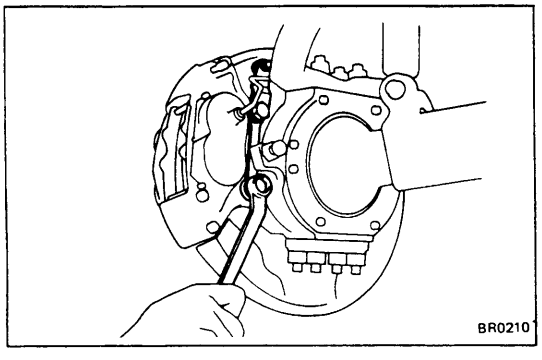

2. **REMOVE CYLINDER**

Remove the two mounting bolts and cylinder.

3. REMOVE ANTI-RATTLE SPRING
4. REMOVE ANTI-RATTLE SPRING PINS
5. REMOVE ANTI-RATTLE SPRING
6. REMOVE BRAKE PADS

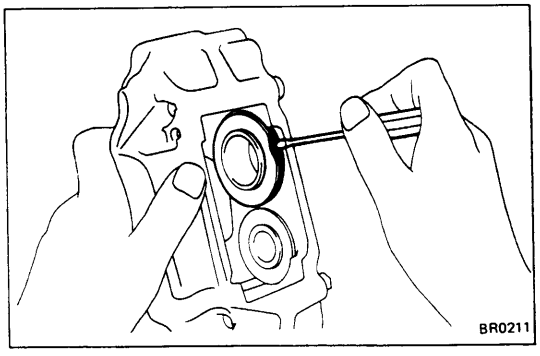

DISASSEMBLY OF CYLINDER

1. REMOVE CYLINDER BOOT SET RING AND BOOT

Using a screwdriver, remove the cylinder boot set ring and boot.

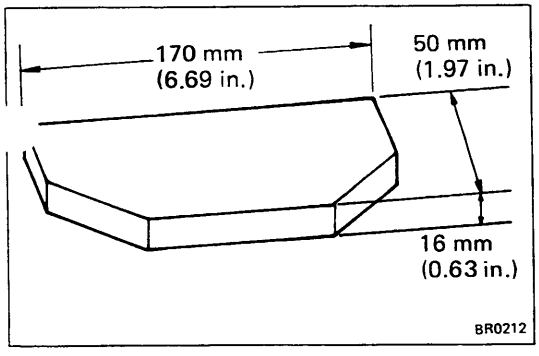

2. REMOVE PISTON FROM CYLINDER

(a) Prepare the wooden plate as shown in the figure to hold the piston.

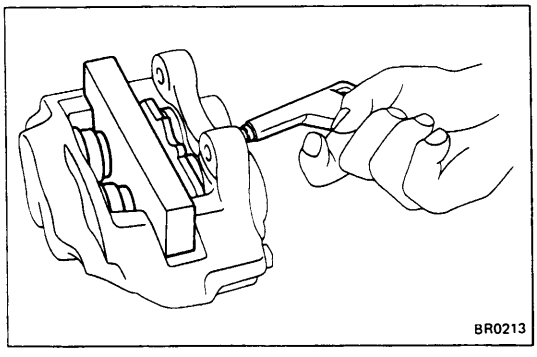

(b) Place the plate between the pistons and insert a pad at one side.

(c) Use compressed air to remove the pistons alternately from the cylinder.

WARNING: Do not place your fingers in front of the piston when using compressed air.

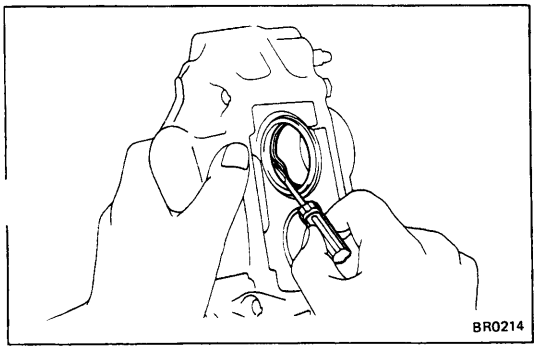

3. REMOVE PISTON SEAL

Using a screwdriver, remove the seal from the cylinder.

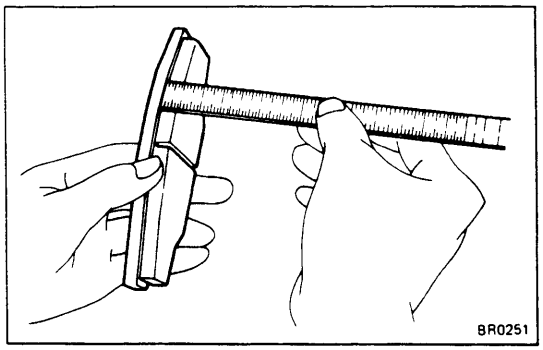

INSPECTION AND REPAIR OF FRONT BRAKE COMPONENTS

1. MEASURE PAD LINING THICKNESS

Minimum thickness: 1.0 mm (0.039 in.)
Standard thickness: 9.7 mm (0.382 in.)

Replace the pad if the thickness is less than the minimum (the 1.0 mm slit is no longer visible) or if it shows sign of uneven wear.

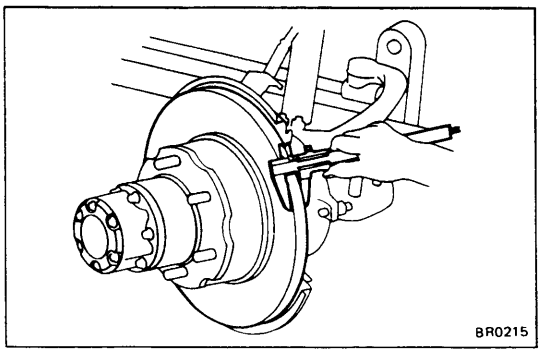

2. MEASURE ROTOR DISC THICKNESS

Minimum thickness: 11.5 mm (0.453 in.)
Standard thickness: 12.5 mm (0.492 in.)

If the disc is scored or worn, or if thickness is less than minimum, repair or replace the disc.

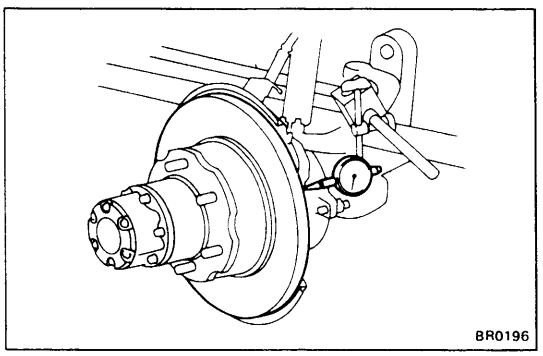

3. MEASURE ROTOR DISC RUNOUT

Measure the rotor disc runout at 10 mm (0.39 in.) from the outer edge of the rotor disc.

Maximum disc runout: 0.15 mm (0.0059 in.)

If the runout is greater than the maximum, replace the disc.

NOTE: Before measuring the runout, confirm that the front bearing play is within specification.

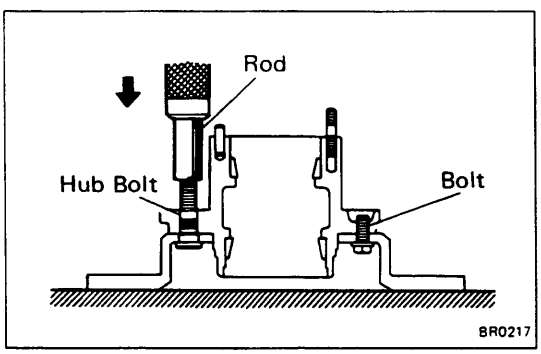

4. IF NECESSARY, REPLACE DISC

(a) Remove the axle hub. (See page FA-45)

(b) Using rod, press the hub bolts out of the axle hub.

(c) Remove the two bolts and separate the disc and hub.

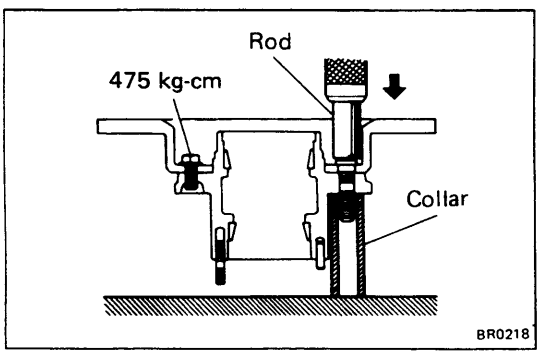

(d) Install a new disc to the axle hub and tighten the two bolts.

Torque: 475 kg-cm (34 ft-lb, 47 N·m)

(e) Using a collar and rod, press the hub bolts into the hub.

(f) Install the axle hub and adjust the front bear[illegible] preload. (See page FA-46)

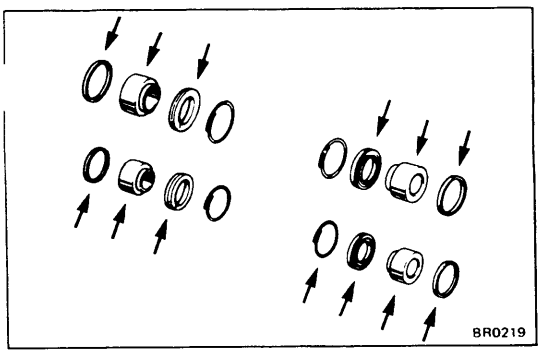

ASSEMBLY OF CYLINDER

(See page BR-25)

1. **APPLY LITHIUM SOAP BASE GLYCOL GREASE TO PARTS INDICATED BY ARROWS**

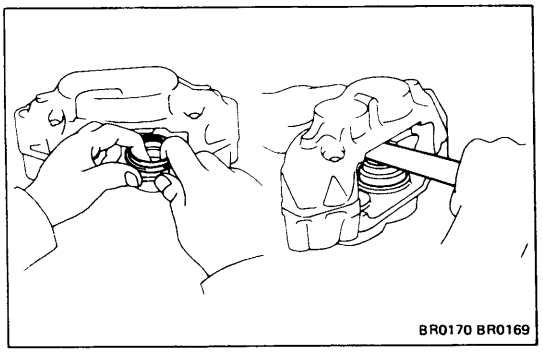

2. **INSTALL PISTON SEAL AND PISTON IN CYLINDER**

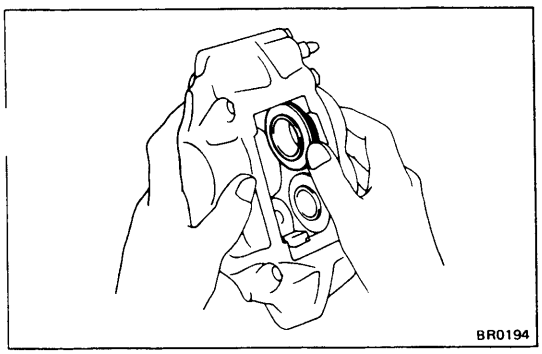

3. **INSTALL CYLINDER BOOT AND SET RING IN CYLINDER**

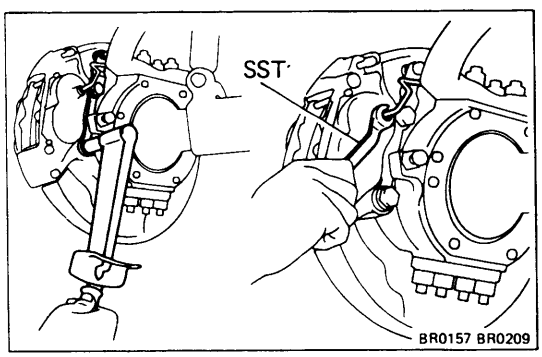

INSTALLATION OF CYLINDER

(See page BR-25)

1. **INSTALL PADS, ANTI-RATTLE SPRING PINS AND ANTI-RATTLE SPRINGS**
   (See steps 5 to 8 on page BR-26)

2. **INSTALL CYLINDER**
   Install and torque the mounting bolts.
   Torque: 900 kg-cm (65 ft-lb, 88 N·m)

3. **CONNECT BRAKE LINE**
   Using SST, connect the brake line.
   SST 09751-36011
   Torque: 155 kg-cm (11 ft-lb, 15 N·m)

4. **FILL BRAKE RESERVOIR WITH BRAKE FLUID AND BLEED BRAKE SYSTEM**
   (See page BR-6)

5. **CHECK FOR FLUID LEAKAGE**

REAR BRAKE—2WD (Duo-Servo Type)

COMPONENTS

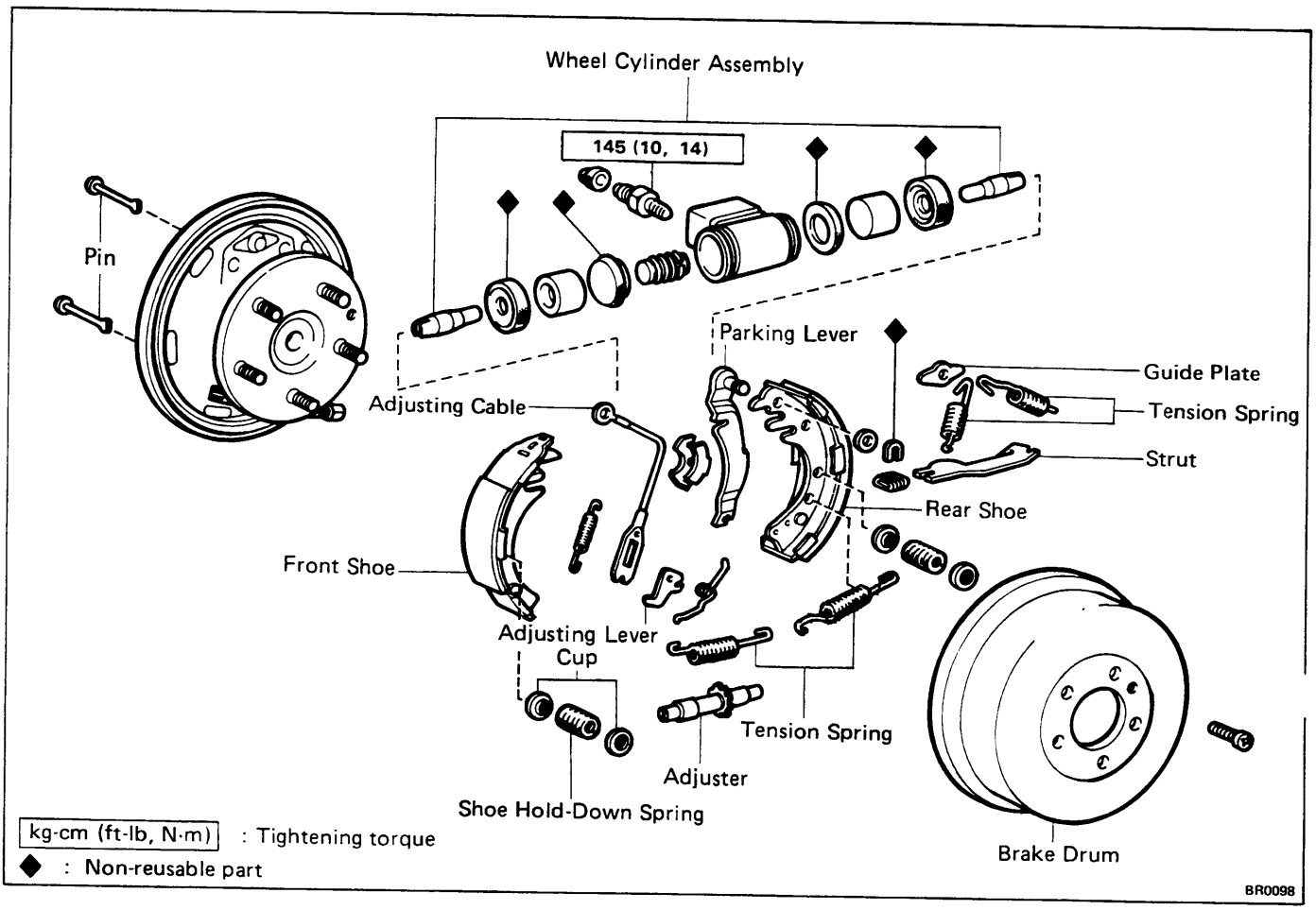

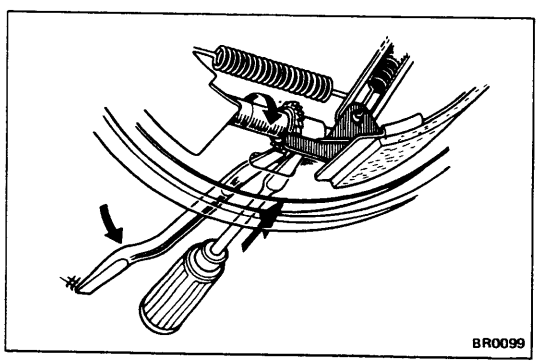

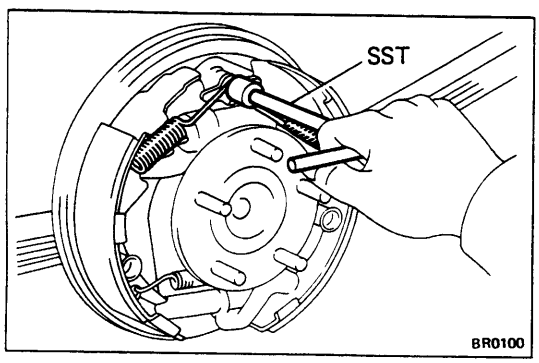

REMOVAL OF REAR BRAKE

1. REMOVE REAR WHEEL AND BRAKE DRUM

NOTE: If the brake drum cannot be removed easily, perform the following steps:

(a) Insert a screwdriver through the hole in the backing plate, and hold the adjuster lever away from the adjuster.

(b) Using another screwdriver, reduce the brake shoe adjustment by turning the adjusting bolt.

2. REMOVE TWO SHOE RETURN SPRINGS

Using SST, remove the two return springs.

SST 09717-20010

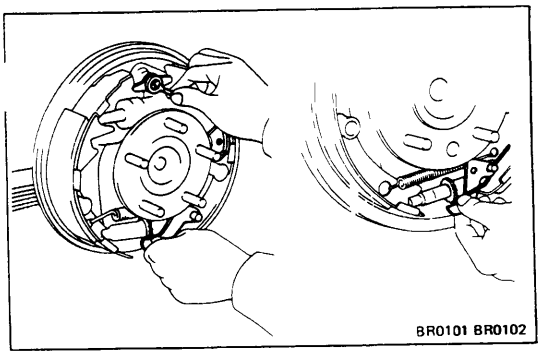

3. REMOVE ADJUSTING CABLE, SHOE GUIDE PLATE, CABLE GUIDE AND ADJUSTING LEVER

(a) Push up the lever and remove the cable, shoe guide plate and cable guide.

(b) Take off the spring from the lever and remove the lever and spring.

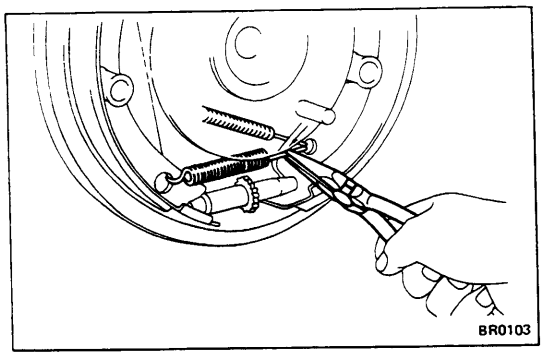

4. REMOVE TWO TENSION SPRINGS

Using pliers, remove the two tension springs.

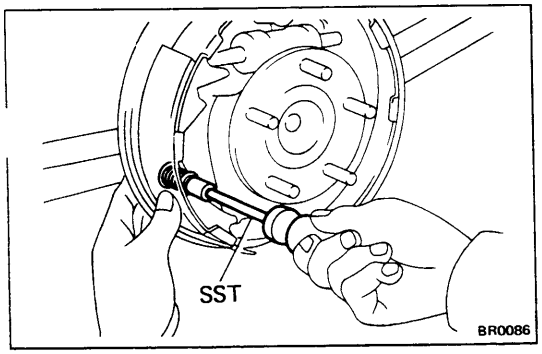

5. REMOVE SHOES, ADJUSTER AND STRUT

(a) Using SST, remove the shoe hold-down springs and pins.

SST 09718-00010

(b) Remove the shoes, adjuster and strut.

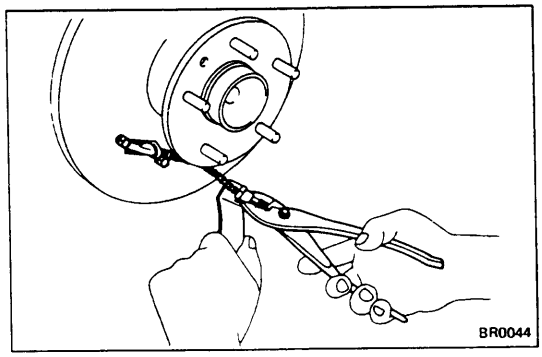

(c) Disconnect the parking brake cable from the parking brake lever.

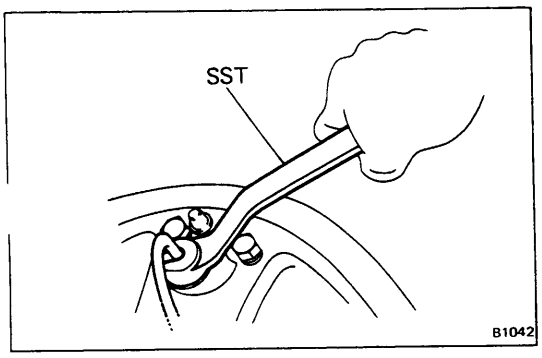

6. IF NECESSARY, REMOVE AND DISASSEMBLE WHEEL CYLINDER

(a) Using SST, disconnect the line.
Use a container to catch the brake fluid.

SST 09751-36011

(b) Remove the two bolts and the wheel cylinder.

(c) Remove the two rods, boots, pistons, piston cups and one spring from the cylinder.

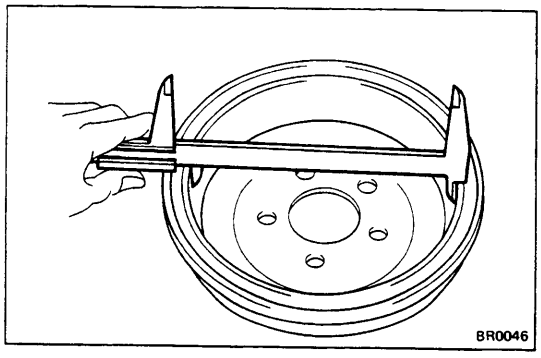

INSPECTION OF REAR BRAKE COMPONENTS

1. MEASURE BRAKE DRUM INSIDE DIAMETER

Maximum inside diameter: 256.0 mm (10.079 in.)
Standard inside diameter: 254.0 mm (10.000 in.)

If the drum is scored or worn, the brake drum may be lathed to the maximum inside diameter.

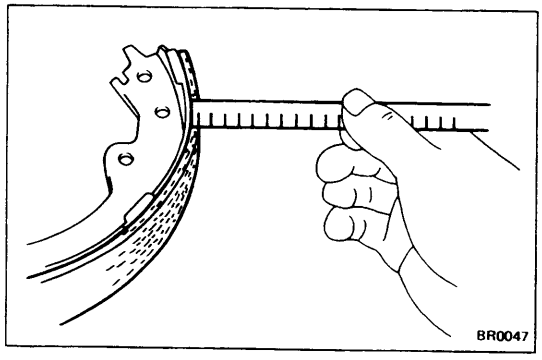

2. MEASURE BRAKE SHOE LINING THICKNESS

Minimum thickness: 1.0 mm (0.039 in.)
Standard thickness: 5.0 mm (0.197 in.)

If the shoe lining is less than minimum or shows signs of uneven wear, replace the brake shoes.

NOTE: If any brake shoe has to be replaced, replace all the rear brake shoes to maintain effective brakes.

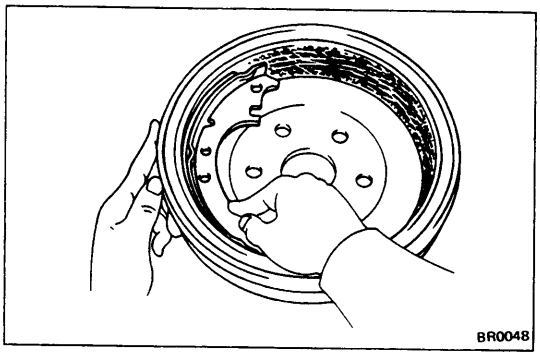

3. INSPECT BRAKE LINING AND DRUM FOR PROPER CONTACT

Replace the brake shoe or turn the brake drum, as necessary.

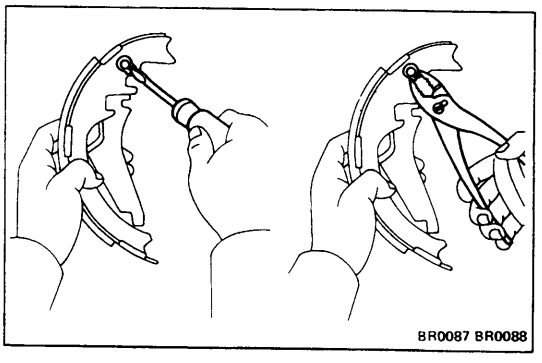

4. IF NECESSARY, REPLACE BRAKE SHOES

(a) Using a screwdriver, remove the parking brake lever from the front shoe.

(b) Using pliers, install the parking brake lever with a new C-washer.

5. INSPECT WHEEL CYLINDER FOR CORROSION OR DAMAGE

6. INSPECT BACKING PLATE FOR WEAR OR DAMAGE

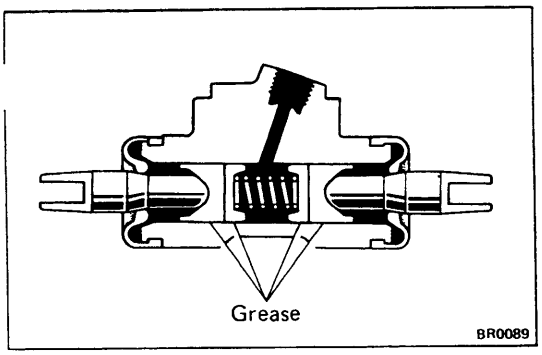

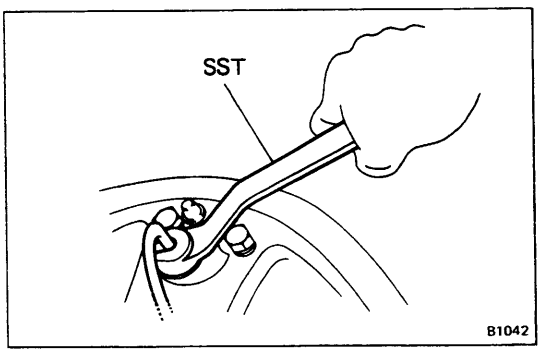

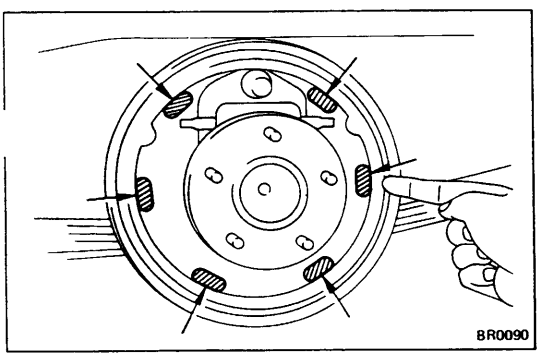

ASSEMBLY OF REAR BRAKES

(See page BR-30)

1. IF NECESSARY, ASSEMBLE AND INSTALL WHEEL CYLINDER

(a) Apply lithium soap base glycol grease to the piston cups and piston.
Install the spring and two piston cups in the wheel cylinder.
Make sure flanges of the cups are pointed inward.

(b) Install the two pistons, boots and rods in the cylinder.

(c) Install the wheel cylinder on the backing plate with two bolts.

(d) Using SST, connect the brake line.

SST 09751-36011

2. APPLY GREASE ON BACKING PLATE, AS SHOWN

Use high-temperature type grease.

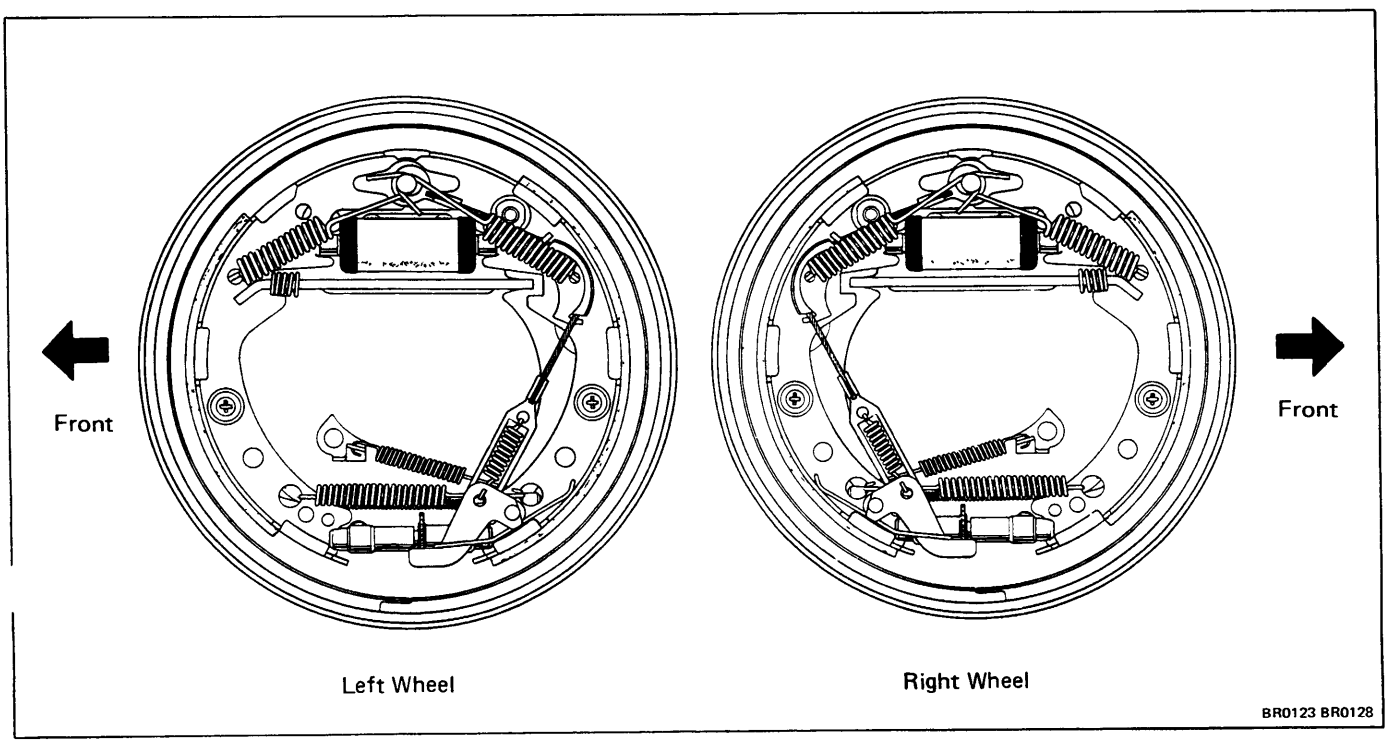

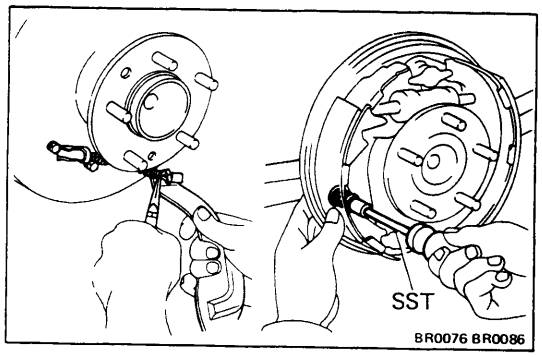

3. INSTALL REAR SHOE

(a) Install the parking brake cable to the parking brake lever.

(b) Set the rear brake shoe in place with the end of the shoe inserted in the piston rod.
Using SST, install the shoe hold-down spring and pin.

SST 09718-00010

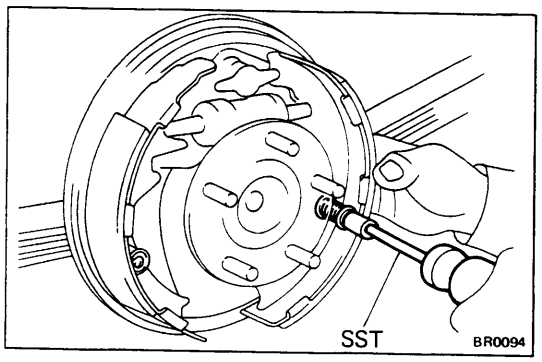

4. INSTALL STRUT AND FRONT SHOE

(a) Install the strut with the spring rearward.

(b) Set the front brake shoe in place with the end of the shoe inserted in the piston rod and the strut in place.
Using SST, install the shoe hold-down spring and pin.

SST 09718-00010

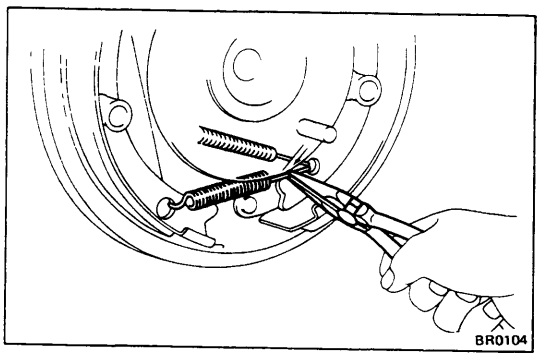

5. INSTALL TWO TENSION SPRINGS

Using pliers, install the two tension springs.

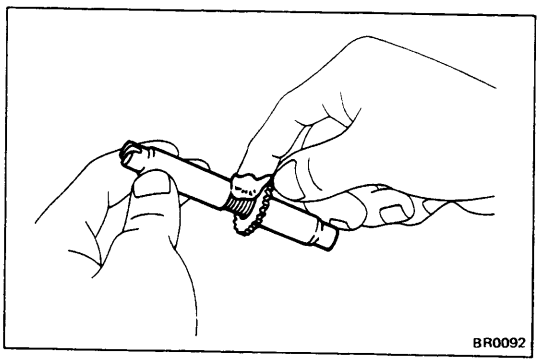

6. APPLY GREASE TO ADJUSTER BOLT THREADS AND END

Use high-temperature type grease.

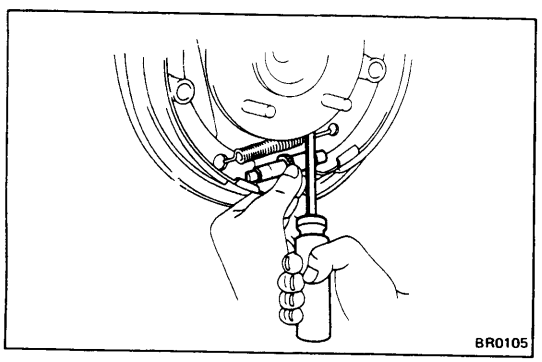

7. INSTALL ADJUSTER

Using a screwdriver, open the shoes and install the adjuster.

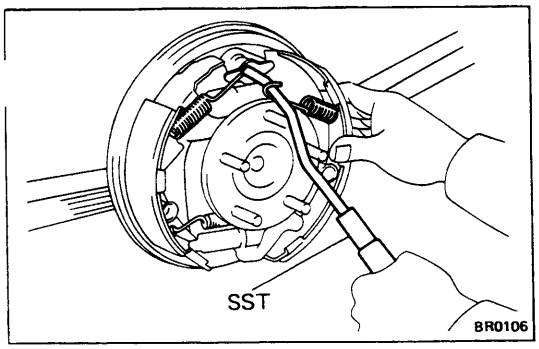

8. INSTALL SHOE GUIDE PLATE, CABLE GUIDE, ADJUSTING CABLE AND RETURN SPRINGS

(a) Install the shoe guide plate, cable guide and adjusting cable.

(b) Using SST, install the front return spring and then install the rear return spring.

SST 09718-20010

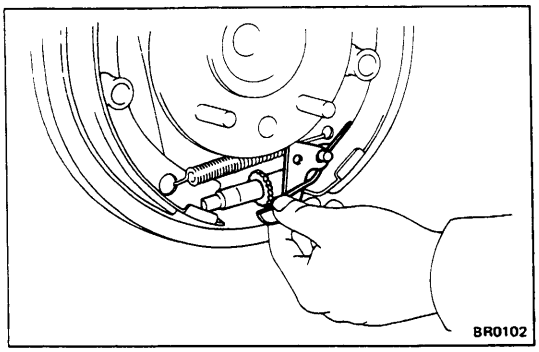

9. INSTALL ADJUSTING LEVER

(a) Install the tension spring to the rear shoe.

(b) Hook the adjusting lever with the cable and install the lever.

(c) Hold the adjusting lever with the tension spring.

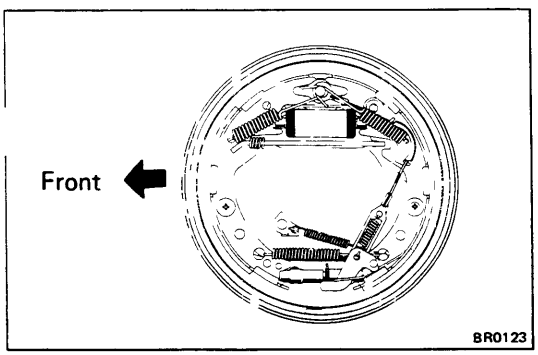

10. CHECK OPERATION OF AUTOMATIC ADJUSTER MECHANISM

(a) Pull the adjusting cable backward as shown, and release.
Check that the adjusting bolt turns.

If the bolt does not turn, check for incorrect installation of the rear brakes.

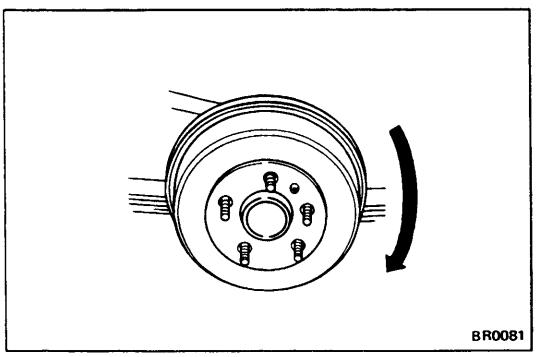

(b) Adjust the strut to the shortest possible length.

(c) Install the drum.

(d) Turn the brake drum in reverse direction and depress the brake pedal. Repeat this procedure several times.

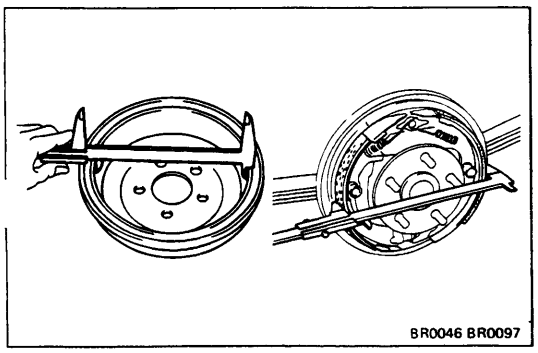

11. CHECK CLEARANCE BETWEEN BRAKE SHOES AND DRUM

(a) Remove the drum.

(b) Measure the brake drum inside diameter and diameter of the brake shoes. Check that the difference between the diameters is the correct shoe clearance.

Shoe clearance: 0.6 mm (0.024 in.)

If incorrect, check the parking brake system.

12. INSTALL BRAKE DRUM

13. FILL BRAKE RESERVOIR WITH BRAKE FLUID AND BLEED BRAKE SYSTEM
(See page BR-6)

REAR BRAKE — 2WD (Leading-Trailing Type)

COMPONENTS

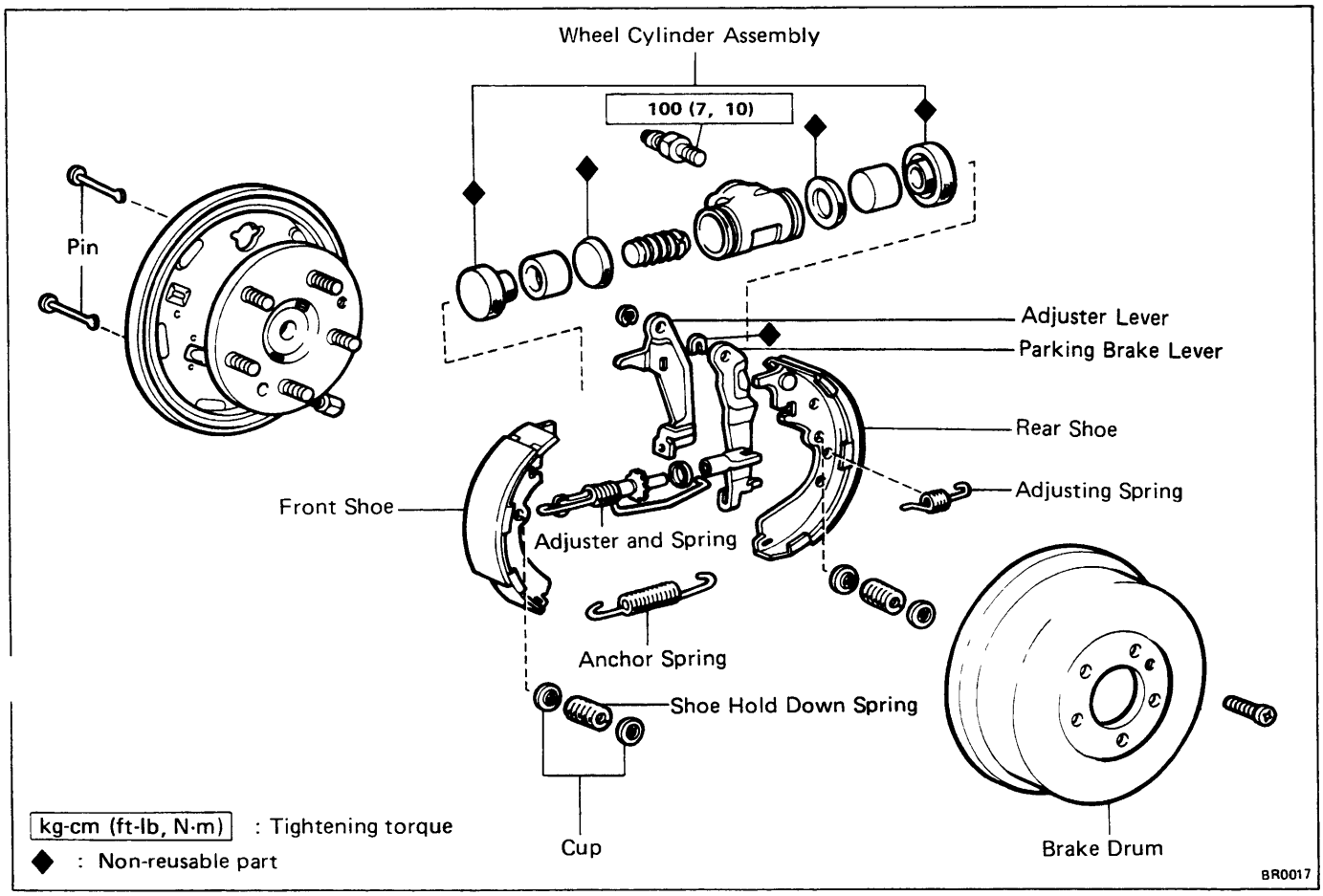

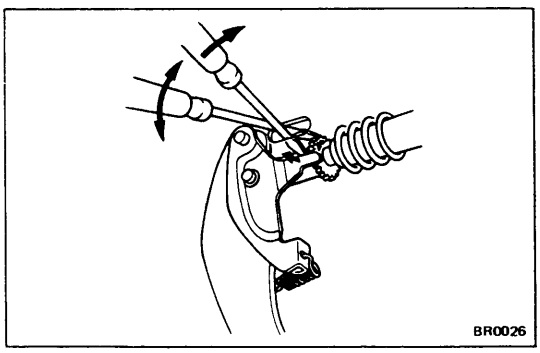

REMOVAL OF REAR BRAKE

1. REMOVE BRAKE DRUM

NOTE: If the brake drum cannot be removed easily, perform the following steps:

(a) Insert a hook through the hole in the backing plate, and hold the adjust lever away from the adjuster.

(b) Using a screwdriver, reduce the brake shoe adjustment by turning the adjuster.

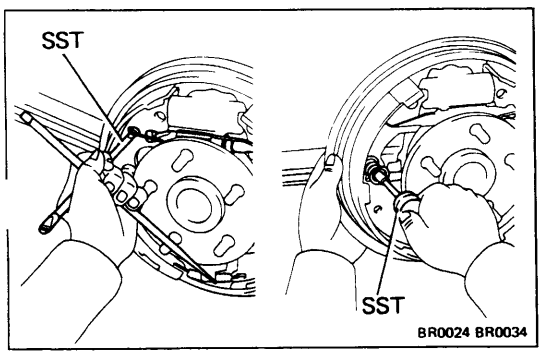

2. REMOVE FRONT BRAKE SHOE AND ADJUSTER

(a) Using SST, remove the return spring adjuster.

SST 09703-30010

(b) Using SST, remove the front shoe hold-down spring and pin.

SST 09718-00010

(c) Remove the front brake shoe and anchor spring.

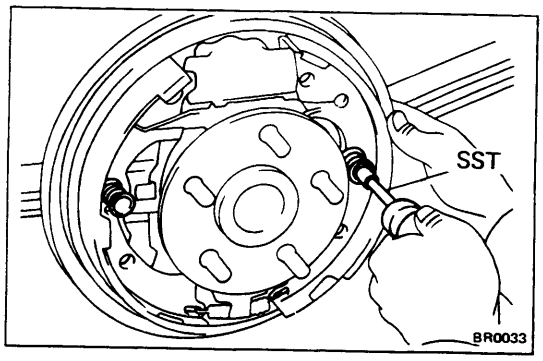

3. REMOVE REAR BRAKE SHOE, LEVER AND STRUT

(a) Using SST, remove the hold-down spring and pin, and remove the rear shoe.

SST 09718-00010

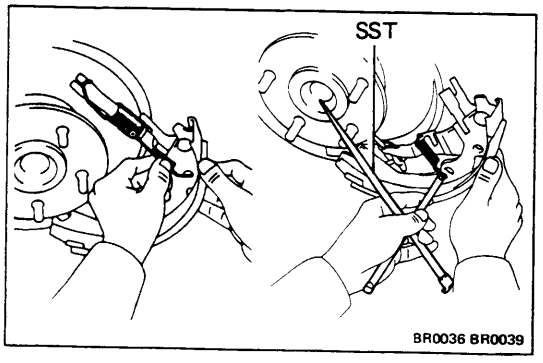

(b) Remove the strut and spring from the parking brake lever.

(c) Using SST, remove the adjusting lever spring.

SST 09703-30010

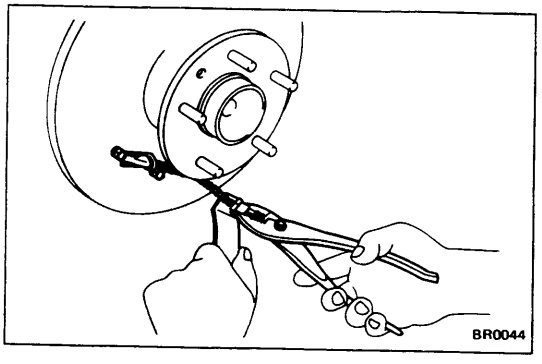

(d) Remove the parking brake cable from the parking brake lever.

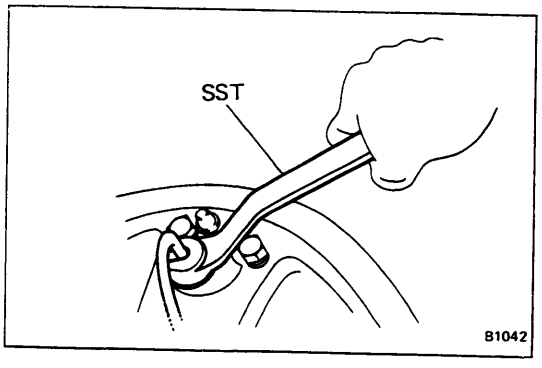

4. IF NECESSARY, REMOVE AND DISASSEMBLE WHEEL CYLINDER

(a) Using SST, disconnect the line.
Use a container to catch the brake fluid.

SST 09751-36011

(b) Remove the two bolts and the wheel cylinder.

(c) Remove the two boots, two pistons, two piston cups and spring from the cylinder.

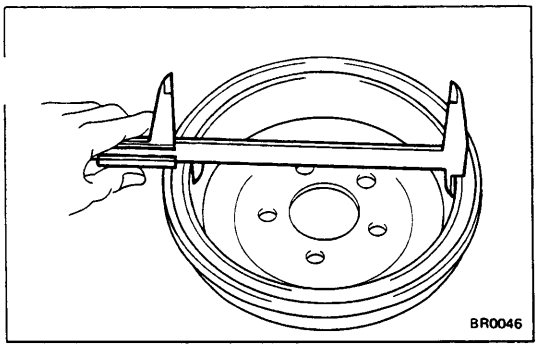

INSPECTION OF REAR BRAKE COMPONENTS

1. MEASURE BRAKE DRUM INSIDE DIAMETER

Maximum inside diameter: 256.0 mm (10.079 in.)
Standard inside diameter: 254.0 mm (10.000 in.)

If the drum is scored or worn, the brake drum may be lathed to the maximum inside diameter.

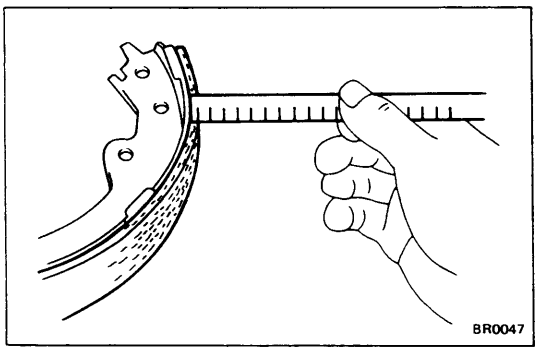

2. MEASURE BRAKE SHOE LINING THICKNESS

Minimum thickness: 1.0 mm (0.039 in.)
Standard thickness: 5.0 mm (0.197 in.)

If the shoe lining is less than minimum or shows signs of uneven wear, replace the brake shoes.

NOTE: If any brake shoe has to be replaced, replace all the rear brake shoes to maintain effective brakes.

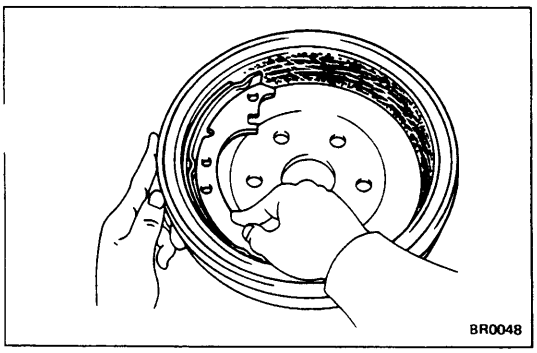

3. INSPECT BRAKE LINING AND DRUM FOR PROPER CONTACT

Replace the brake shoe or turn the brake drum, as necessary.

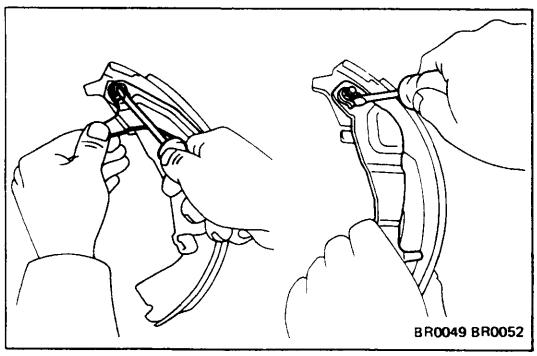

4. IF NECESSARY, REPLACE BRAKE SHOES

(a) Using a screwdriver, remove the parking brake lever and automatic adjusting lever from the front shoe.

(b) Using pliers, install the parking brake lever with a new C-washer, and install the automatic adjusting lever with an E-ring.

5. INSPECT WHEEL CYLINDER FOR CORROSION OR DAMAGE

6. INSPECT BACKING PLATE FOR WEAR OR DAMAGE

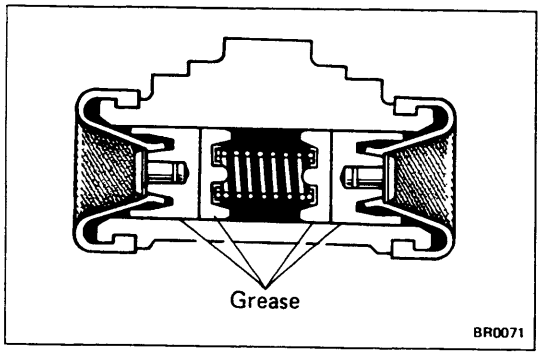

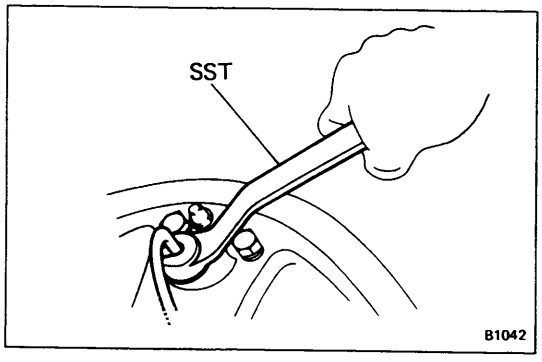

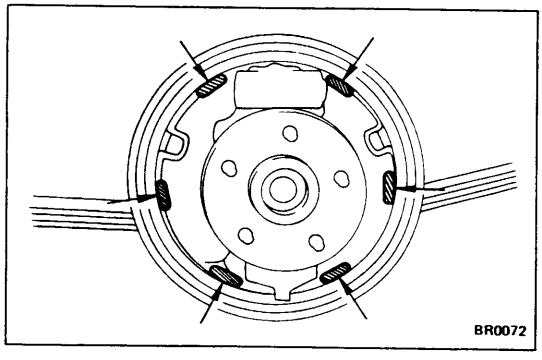

ASSEMBLY OF REAR BRAKE

(See page BR-37)

1. IF NECESSARY, ASSEMBLE AND INSTALL WHEEL CYLINDER

(a) Apply lithium soap base glycol grease to the piston cups and piston.
Install the spring and two piston cups in the wheel cylinder.
Make sure the flanges of the cups are pointed inward.

(b) Install two pistons. Apply lithium soap base glycol grease as shown, and install the two boots.

(c) Install the wheel cylinder on the backing plate with two bolts.

(d) Using SST, connect the brake line.

SST 09751-36011

Torque: 155 kg-cm (11 ft-lb, 15 N·m)

2. APPLY GREASE ON BACKING PLATE, AS SHOWN

Use high-temperature type grease.

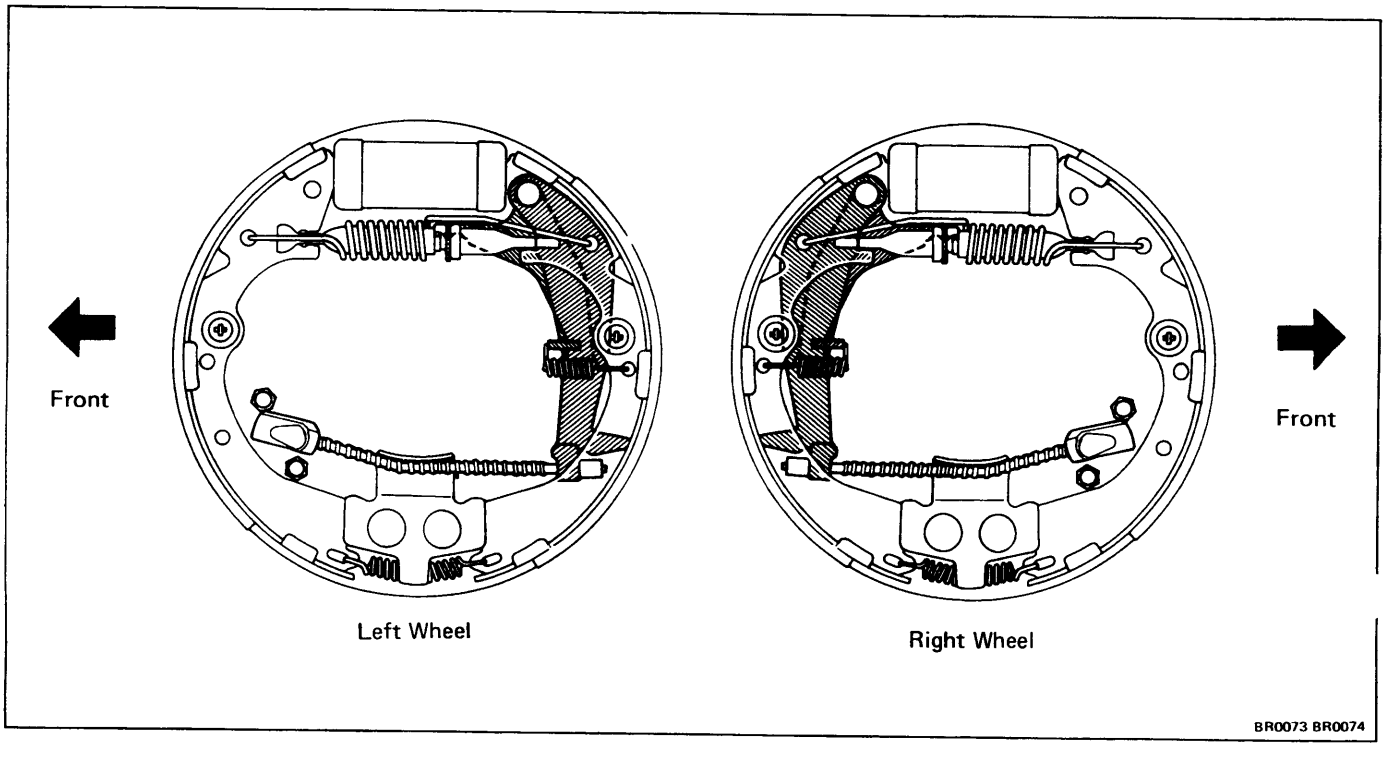

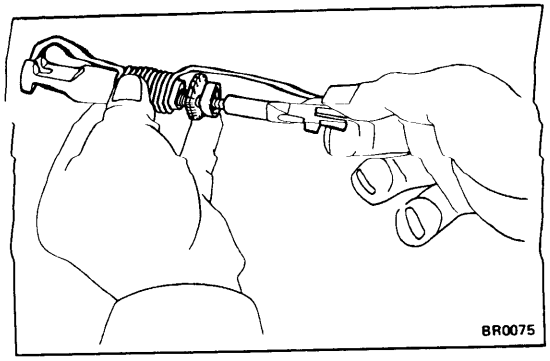

3. *APPLY GREASE TO ADJUSTER BOLT THREADS AND END*

Use high-temperature type grease.

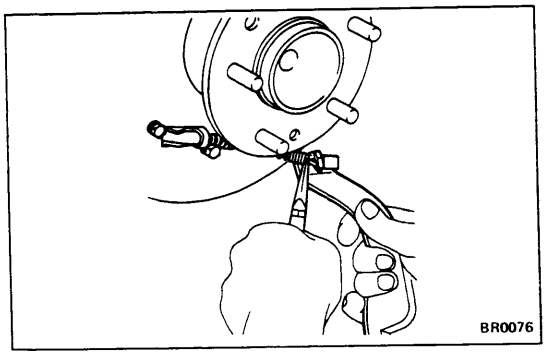

4. CONNECT PARKING BRAKE CABLE TO PARKING BRAKE LEVER

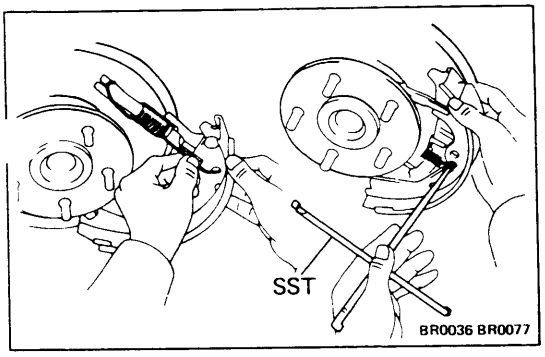

5. INSTALL STRUT ONTO REAR SHOE

(a) Install the strut and return spring to lever.

(b) Using SST, install the adjusting lever spring.

SST 09703-30010

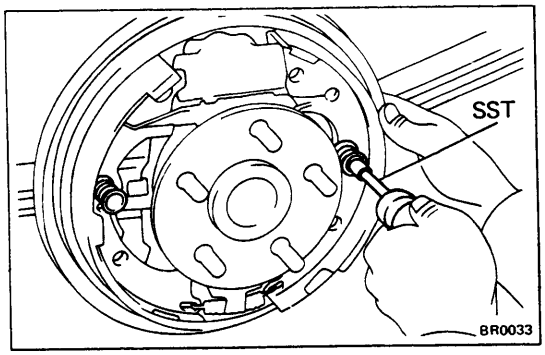

6. INSTALL REAR SHOE

(a) Set the rear shoe in place with the end of the shoe inserted in the wheel cylinder and the other end in the anchor plate.

(b) Using SST, install the pin and shoe hold-down spring.

SST 09718-00010

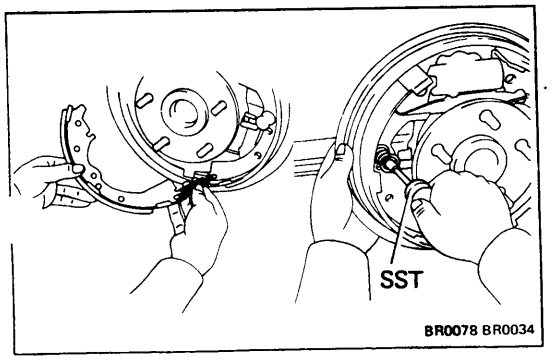

7. INSTALL FRONT SHOE

(a) Install the anchor spring between the front and rear shoes.

(b) Set the front shoe in place with the end of the shoe inserted in the wheel cylinder and the strut in place.

(c) Using SST, install the pin and shoe hold-down spring.

SST 09718-00010

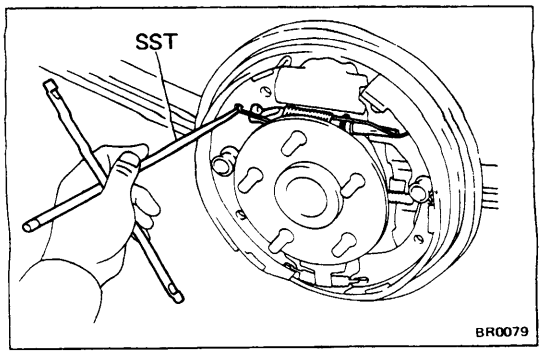

(d) Using SST, install the return spring.
SST 09703-30010

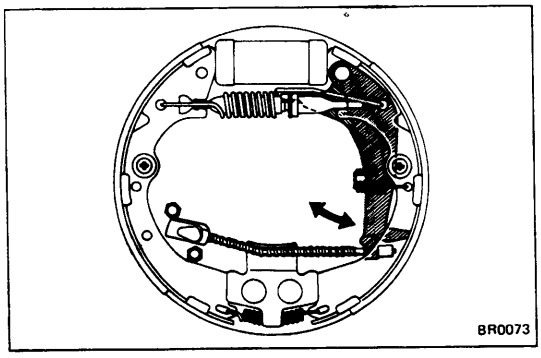

8. CHECK OPERATION OF AUTOMATIC ADJUSTER MECHANISM

(a) Check that the adjusting bolt turns while pulling the parking brake lever up.

If the bolt does not turn, check for incorrect installation of the rear brakes.

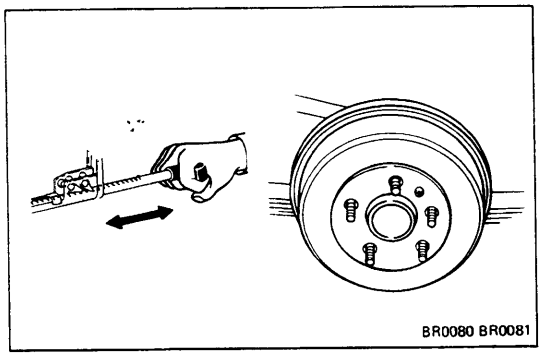

(b) Adjust the strut to the shortest possible length.

(c) Install the drum.

(d) Pull the parking brake lever all the way up several times.

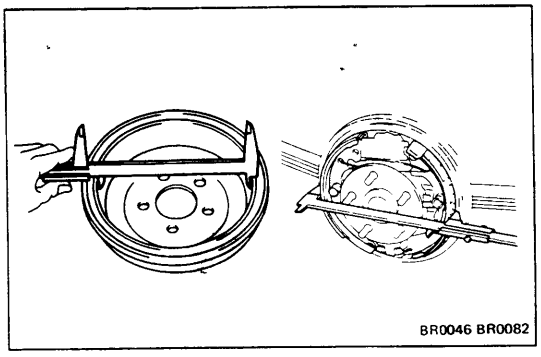

9. CHECK CLEARANCE BETWEEN BRAKE SHOES AND DRUM

(a) Remove the drum.

(b) Measure the brake drum inside diameter and diameter of the brake shoes. Check that the difference between the diameters is the correct shoe clearance.

Shoe clearance: 0.6 mm (0.024 in.)

If incorrect, check the parking brake system.

10. INSTALL BRAKE DRUM AND REAR WHEEL

11. FILL BRAKE RESERVOIR WITH BRAKE FLUID AND BLEED BRAKE SYSTEM
(See page BR-6)

REAR BRAKE—4WD (Duo-Servo Type)

COMPONENTS

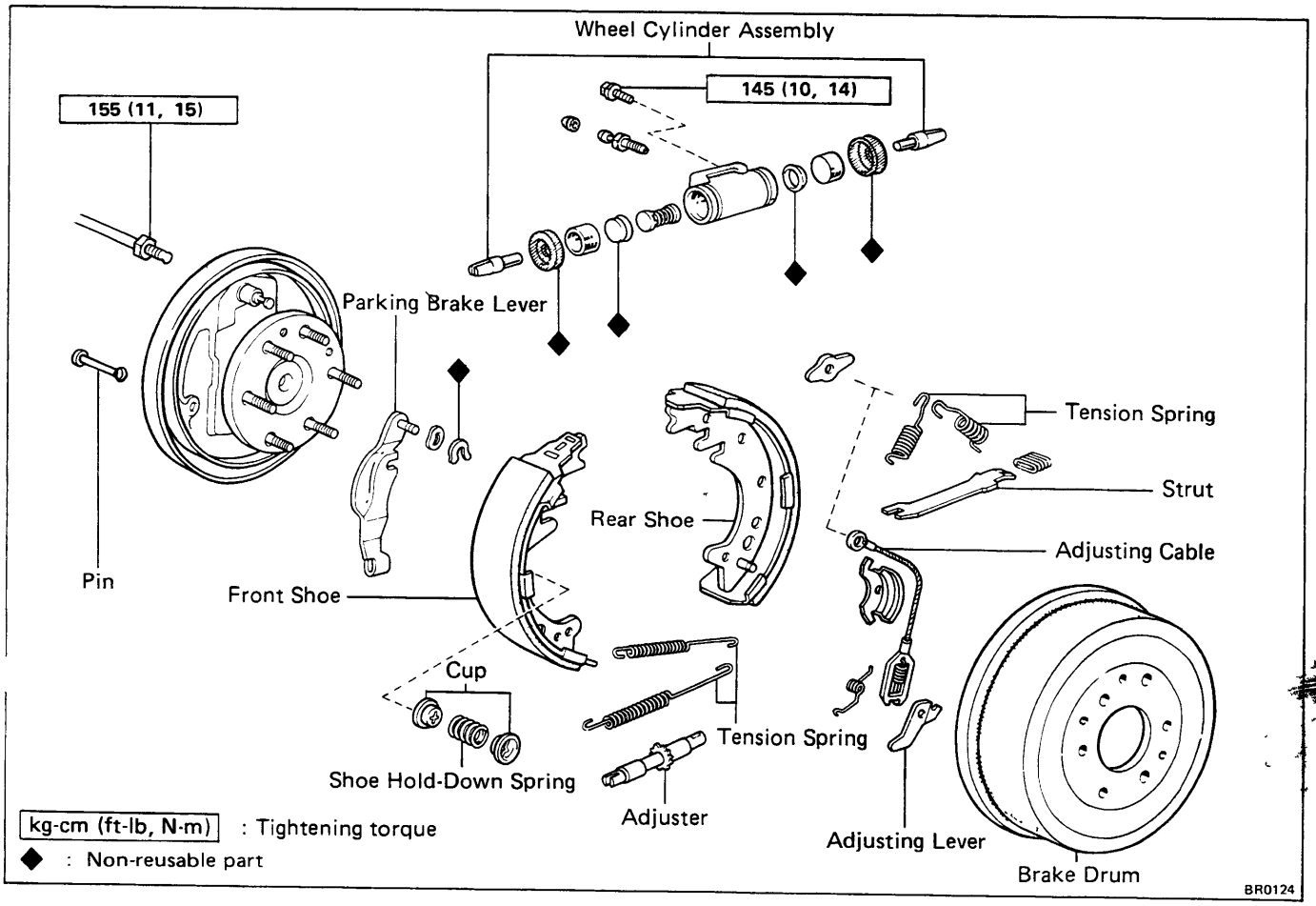

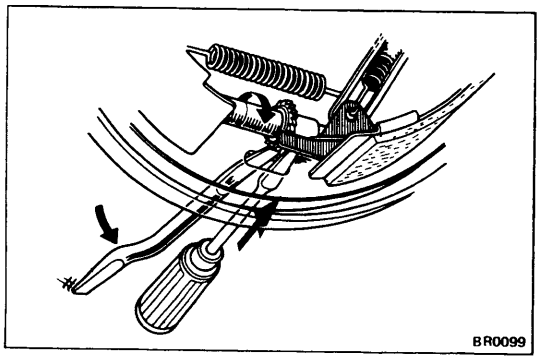

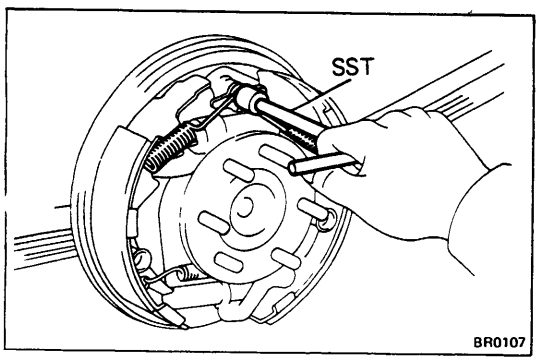

REMOVAL OF REAR BRAKE

1. REMOVE REAR WHEEL AND BRAKE DRUM

NOTE: If the brake drum cannot be removed easily, perform the following steps:

(a) Insert a screwdriver through the hole in the backing plate, and hold the adjuster lever away from the adjuster.

(b) Using another screwdriver, reduce the brake shoe adjustment by turning the adjusting bolt.

2. REMOVE TWO SHOE RETURN SPRINGS

Using SST, remove the two return springs.

SST 09717-20010

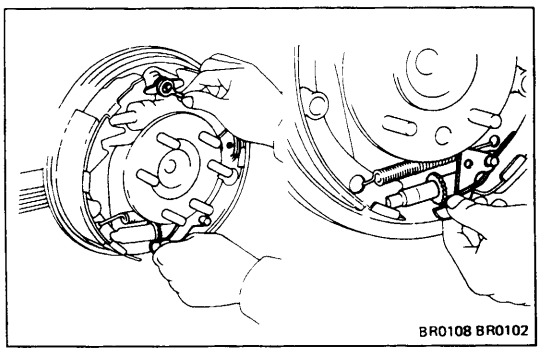

3. REMOVE ADJUSTING CABLE, CABLE GUIDE AND ADJUSTING LEVER

(a) Push up the lever and remove the cable and ca. guide.

(b) Take off the spring from the lever and remove the lever and spring.

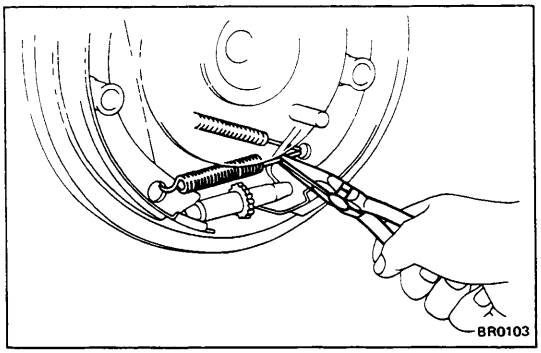

4. REMOVE TWO TENSION SPRINGS

Using pliers, remove the two tension springs.

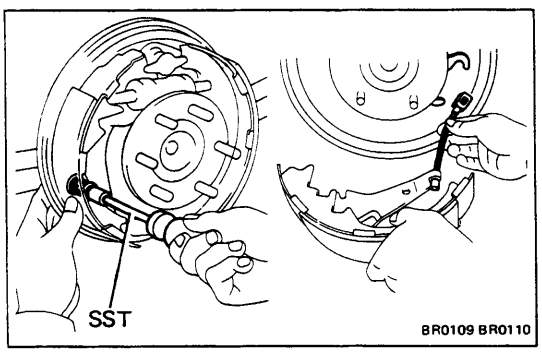

5. REMOVE SHOES, ADJUSTER AND STRUT

(a) Using SST, remove the shoe hold-down springs and pins.

SST 09718-00010

(b) Remove the shoes, adjuster and strut.

(c) Disconnect the parking brake cable from the bell-crank.

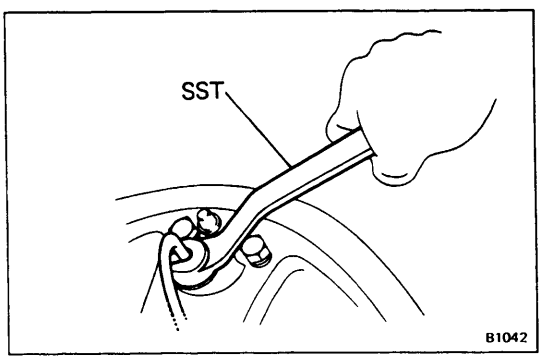

6. IF NECESSARY, REMOVE AND DISASSEMBLE WHEEL CYLINDER

(a) Using SST, disconnect the line.
Use a container to catch the brake fluid.

SST 09751-36011

(b) Remove the two bolts and the wheel cylinder.

(c) Remove the two rods,boots, pistons, piston cups and one spring from the cylinder.

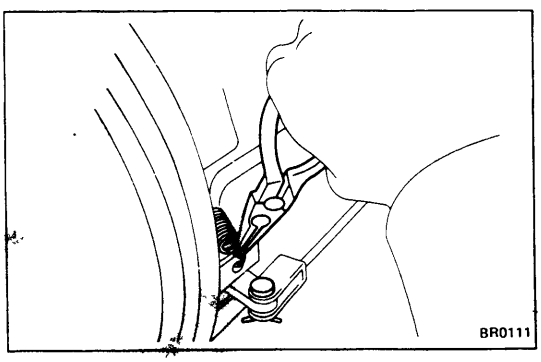

7. IF NECESSARY, REMOVE AND DISASSEMBLE BELLCRANK ASSEMBLY

(a) Remove the tension spring from the bellcrank.

(b) Remove the cotter pin and disconnect the parking brake rear cable.

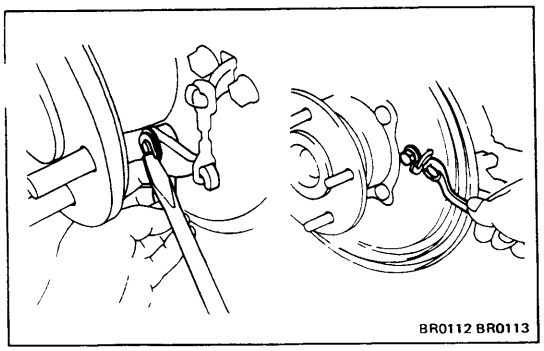

(c) Using a screwdriver, remove the small bellcrank from the backing plate with parking brake wire No.2.

(d) Remove the two mounting bolts and large bellcrank assembly.

INSPECTION OF REAR BRAKE COMPONENTS

1. MEASURE BRAKE DRUM INSIDE DIAMETER

Maximum inside diameter: 256.0 mm (10.079 in.)
Standard inside diameter: 254.0 mm (10.000 in.)

If the drum is scored or worn, the brake drum may be lathed to the maximum inside diameter.

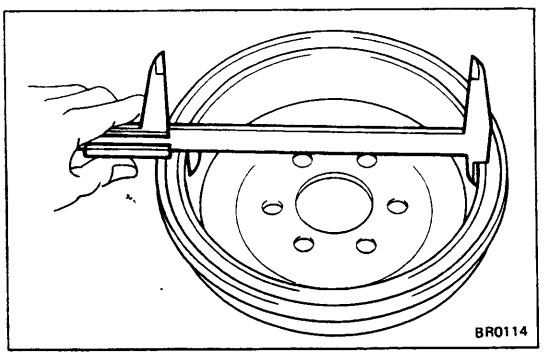

2. MEASURE BRAKE SHOE LINING THICKNESS

Minimum thickness: 1.0 mm (0.039 in.)
Standard thickness: 5.0 mm (0.197 in.)

If the shoe lining is less than minimum or shows signs of uneven wear, replace the brake shoes.

NOTE: If any brake shoe has to be replaced, replace all the rear brake shoes to maintain effective brakes.

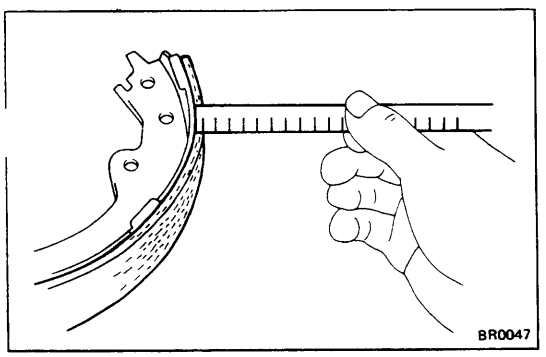

3. INSPECT BRAKE LINING AND DRUM FOR PROPER CONTACT

Replace the brake shoe or turn the brake drum, as necessary.

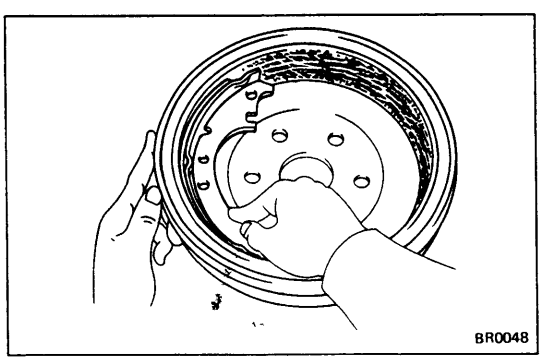

4. IF NECESSARY, REPLACE BRAKE SHOES

(a) Using a screwdriver, remove the parking brake lever from the front shoe.

(b) Using pliers, install the parking brake lever with a new C-washer.

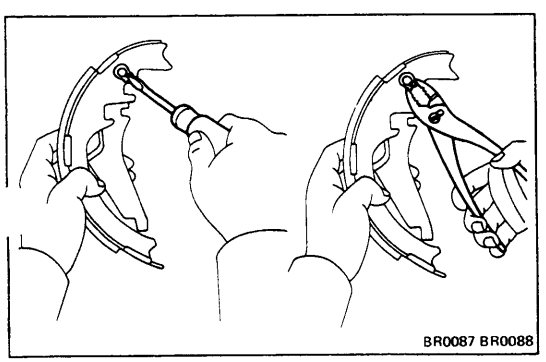

5. **INSPECT WHEEL CYLINDER FOR CORROSION OR DAMAGE**

6. **INSPECT BACKING PLATE FOR WEAR OR DAMAGE**

7. **INSPECT BELLCRANK PARTS FOR BENDING, WEAR OR DAMAGE**

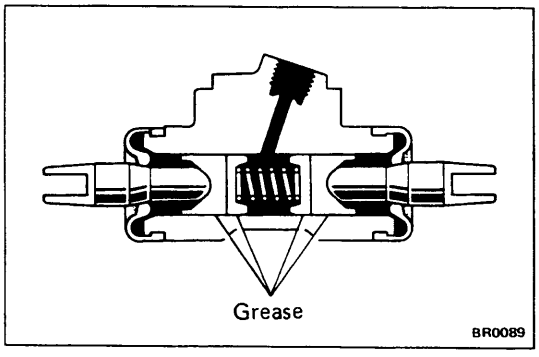

ASSEMBLY OF REAR BRAKES

(See page BR-43)

1. **IF NECESSARY, ASSEMBLE AND INSTALL WHEEL CYLINDER**

   (a) Apply lithium soap base glycol grease to the piston cups and piston.
   Install the spring and two piston cups in the wheel cylinder.
   Make sure flanges of the cups are pointed inward.

   (b) Install the two pistons, boots and rods in the cylinder.

   (c) Install the wheel cylinder on the backing plate with two bolts.

   (d) Using SST, connect the brake line.

   SST 09751-36011

   Torque: 155 kg-cm (11 ft-lb, 15 N·m)

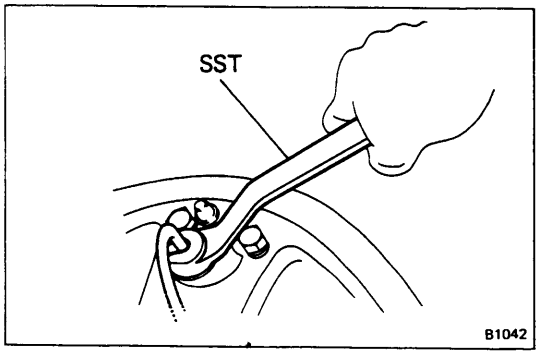

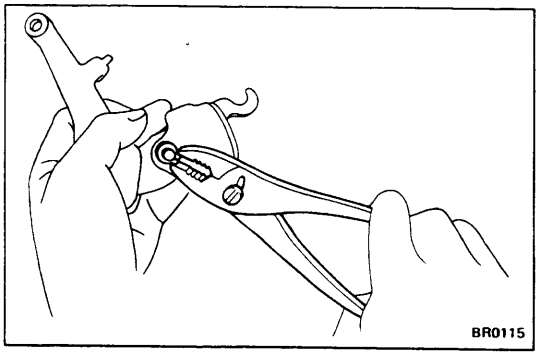

2. **IF NECESSARY, ASSEMBLE AND INSTALL BELLCRANK ASSEMBLY**

   (a) Apply high-temperature type grease to the rotating parts to the bellcrank.

   (b) Install the bellcrank to the bracket with a new C-washer.

   (c) Apply rubber grease to the seal lip.

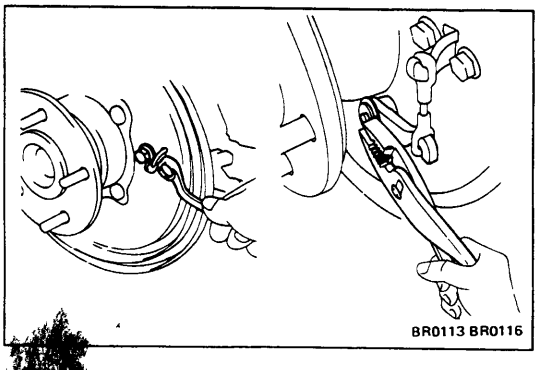

   (d) Install the bellcrank assembly on the backing plate with two bolts.

   (e) Torque the bolts.

   Torque: 130 kg-cm (9 ft-lb, 13 N·m)

   (f) Install the parking brake wire to the large bellcrank.

   (g) Hook the small bellcrank to the parking brake wi and then install the bellcrank on the backing plate with a new C-washer.

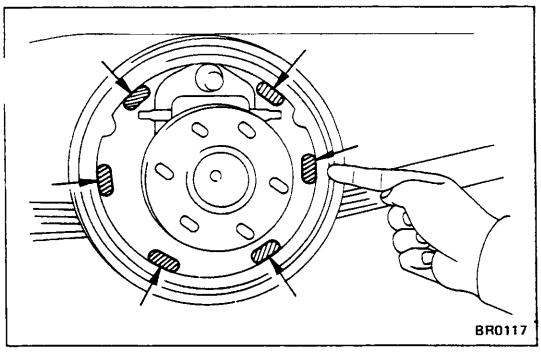

3. **APPLY GREASE ON BACKING PLATE, AS SHOWN**

Use high-temperature type grease.

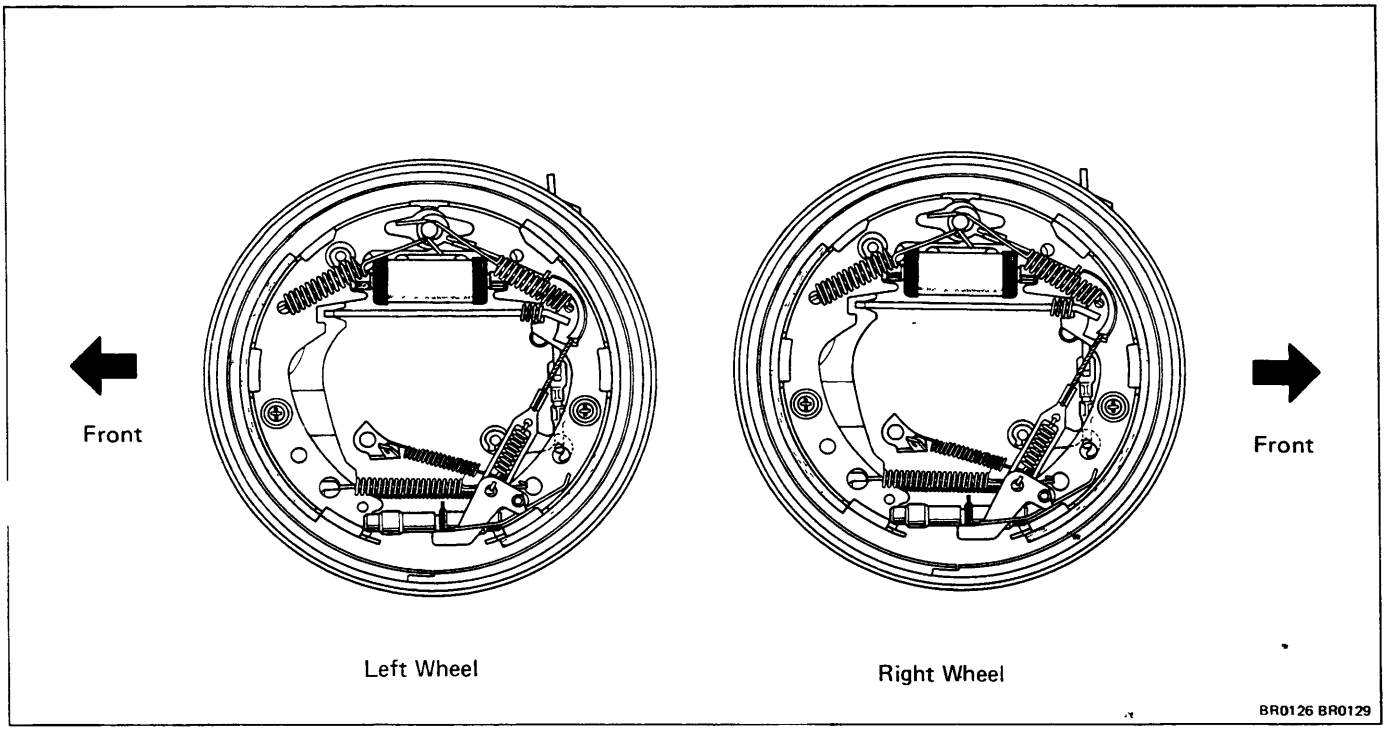

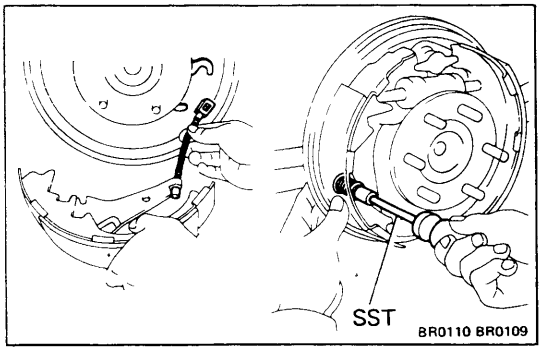

4. **INSTALL FRONT SHOE**

(a) Install the parking brake cable to the parking brake lever and bellcrank.

(b) Set the front brake shoe in place with the end of the shoe inserted in the piston rod.
Using SST, install the shoe hold-down spring and pin.

SST 09718-00010

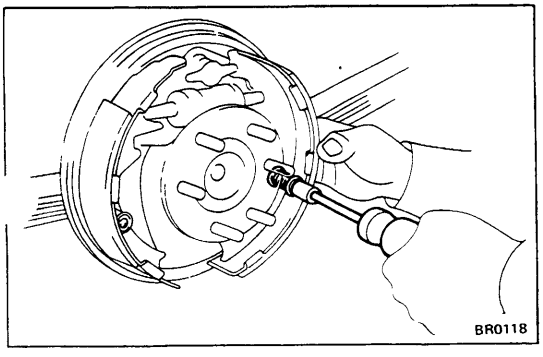

5. **INSTALL STRUT AND REAR SHOE**

(a) Install the strut with the spring rearward.

(b) Set the rear brake shoe in place with the end of the shoe inserted in the piston rod and the strut in place.
Using SST, install the shoe hold-down spring and pin.

SST 09718-00010

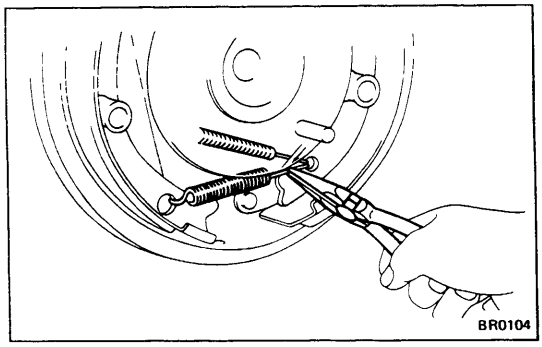

6. INSTALL TWO TENSION SPRINGS

Using pliers, install the two tension springs.

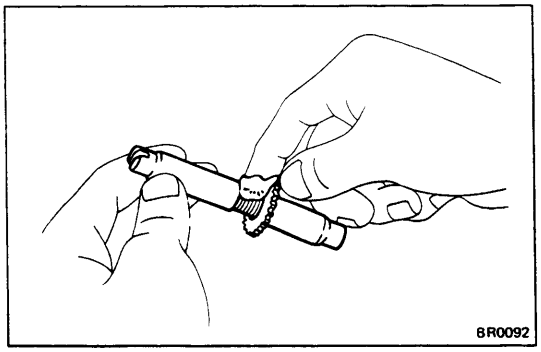

7. APPLY GREASE TO ADJUSTER BOLT THREADS AND END

Use high-temperature type grease.

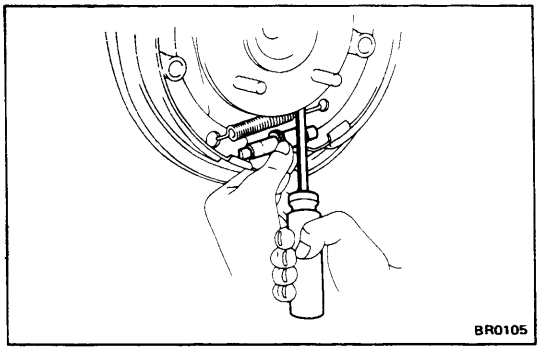

8. INSTALL ADJUSTER

Using a screwdriver, open the shoes and install the adjuster.

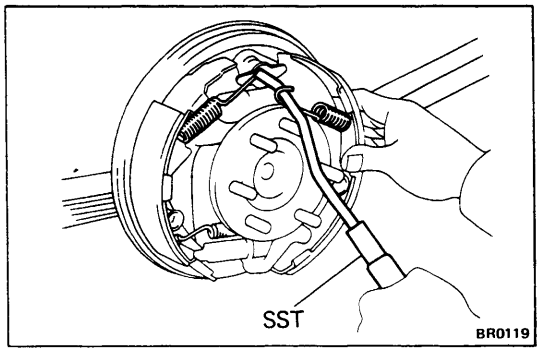

9. INSTALL ADJUSTING CABLE AND RETURN SPRINGS

(a) Install the shoe guide plate, cable guide and adjusting cable.

(b) Using SST, install the front return spring and then install the rear return spring.

SST 09718-20010

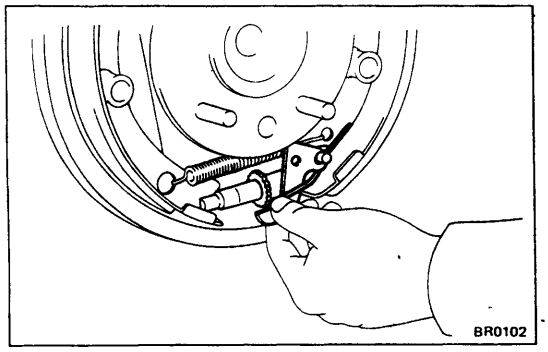

10. INSTALL ADJUSTING LEVER

(a) Install the tension spring to the rear shoe.

(b) Hook the adjusting lever with the cable and install the lever.

(c) Hold the adjusting lever with the tension spring

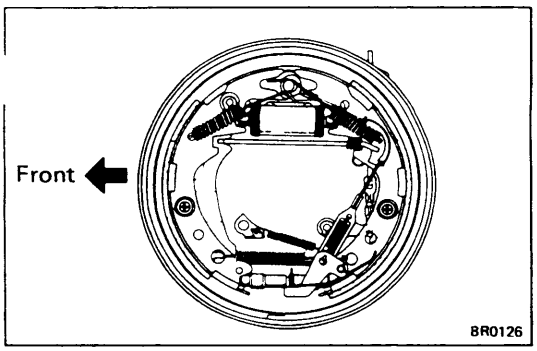

11. CHECK OPERATION OF AUTOMATIC ADJUSTER MECHANISM

(a) Pull the adjusting cable backward as shown, and release.
Check that the adjusting bolt turns.

If the bolt does not turn, check for incorrect installation of the rear brakes.

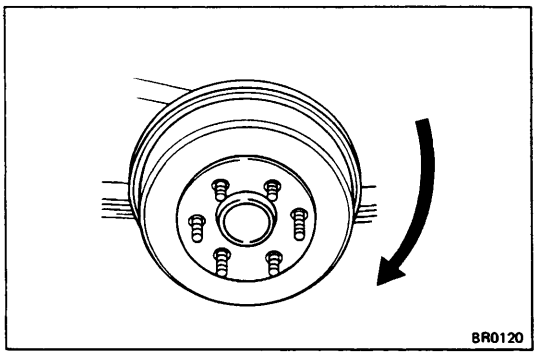

(b) Adjust the strut to the shortest possible length.

(c) Install the drum.

(d) Turn the brake drum in reverse direction and depress the brake pedal.
Repeat this procedure several times.

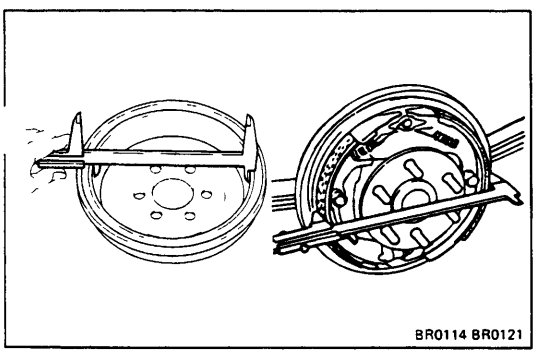

12. CHECK CLEARANCE BETWEEN BRAKE SHOES AND DRUM

(a) Remove the drum.

(b) Measure the brake drum inside diameter and diameter of the brake shoes. Check that the difference between the diameters is the correct shoe clearance.

Shoe clearance: 0.6 mm (0.024 in.)

If incorrect, check the parking brake system.

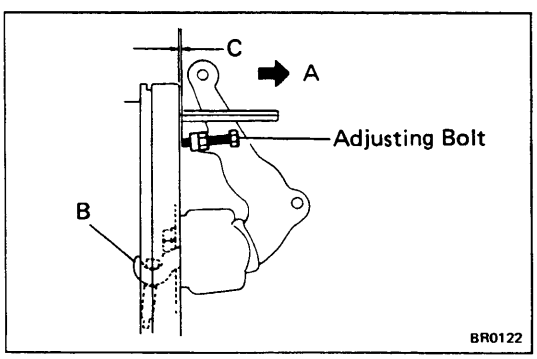

13. IF NECESSARY, ADJUST BELLCRANK

(a) Lightly pull the bellcrank in direction A until there is no slack at part B.

(b) In this condition, turn the adjusting bolt so that dimension C will be 1.0 — 2.0 mm (0.039 — 0.078 in.).

(c) Lock the adjust bolt with the lock nut.

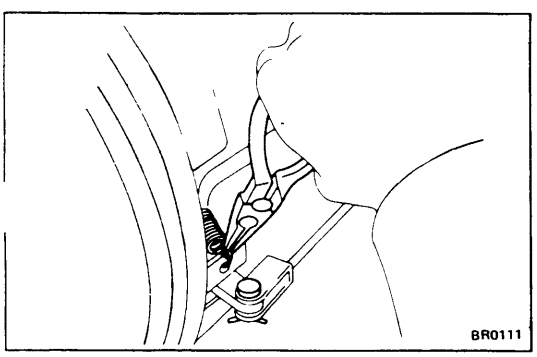

(d) Connect the parking brake cable No.2 to the bellcrank.

(e) Install the tension spring.

14. INSTALL BRAKE DRUM AND REAR WHEEL

15. FILL BRAKE RESERVOIR WITH BRAKE FLUID AND BLEED BRAKE SYSTEM
(See page BR-6)

LOAD SENSING PROPORTIONING AND BY-PASS VALVE (LSP & BV)

COMPONENTS

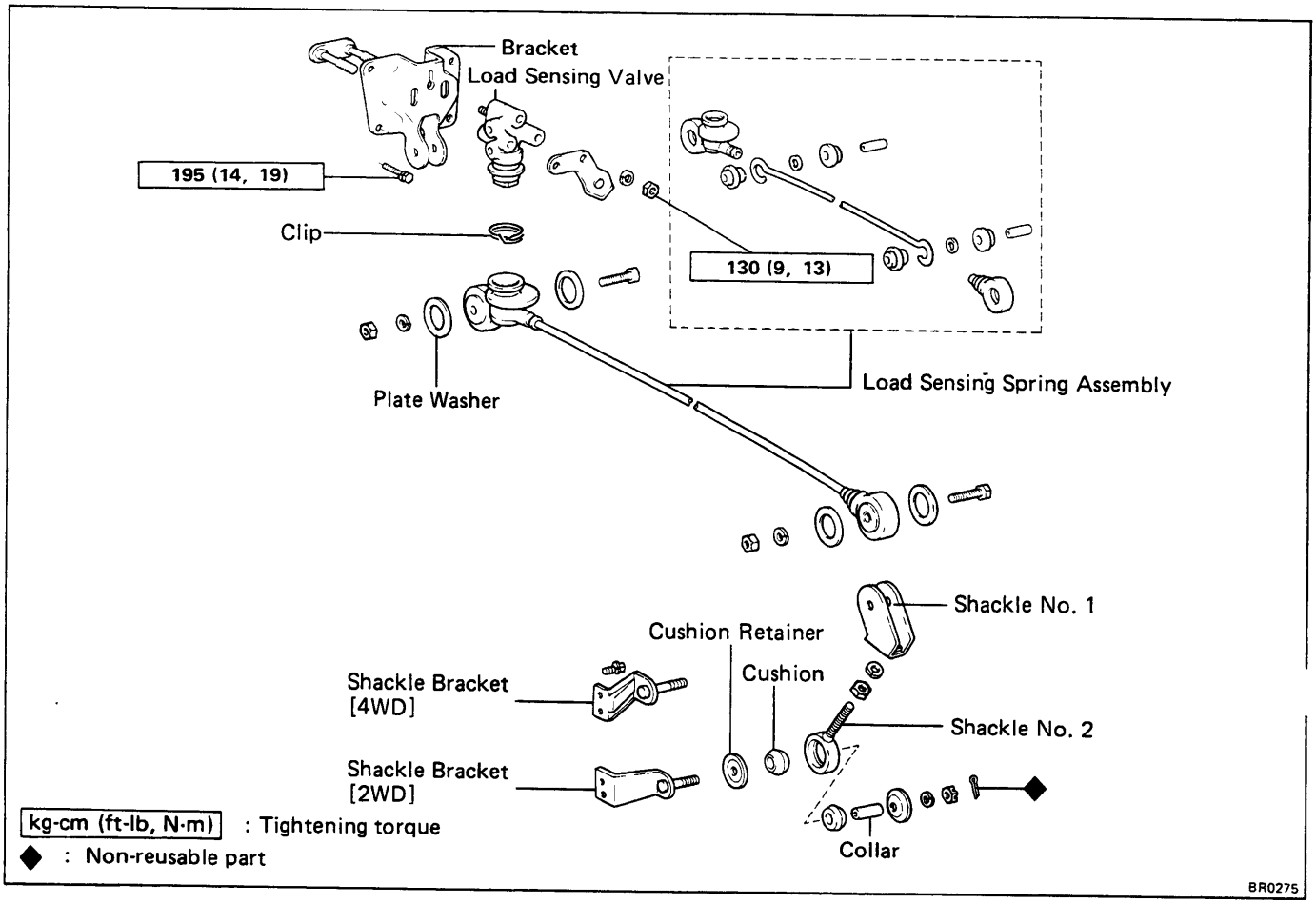

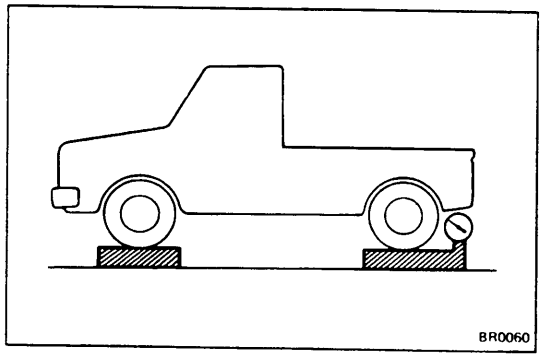

CHECK AND ADJUSTMENT OF FLUID PRESSURE

1. **SET REAR AXLE LOAD**

Rear axle load (includes vehicle weight):

2WD	700 kg (1,543 lb)
4WD	750 kg (1,653 lb)

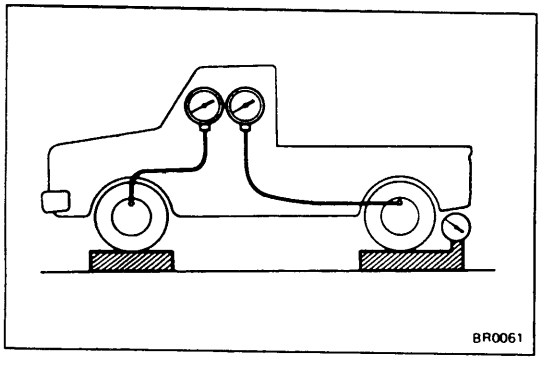

2. **INSTALL LSPV GAUGE (SST) AND BLEED AIR**

SST 09709-29017

B02030

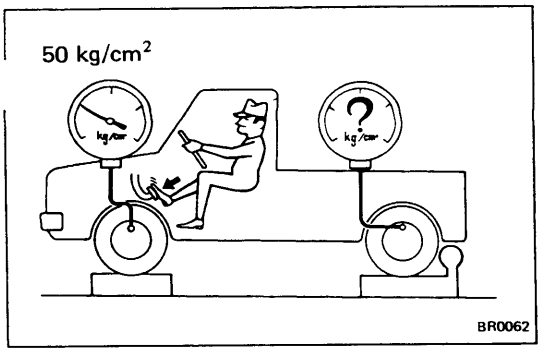

3. **RAISE FRONT BRAKE PRESSURE TO 50 kg/cm² (711 psi, 4,903 kPa) AND CHECK REAR BRAKE PRESSURE**

Rear brake pressure:
2WD 37±5 kg/cm² (526±71 psi, 3,628±490 kPa)
4WD 36±5 kg/cm² (512±71 psi, 3,530±490 kPa)

NOTE: The brake pedal should not be depressed twice and/or returned while setting to the specified pressure. Read the value of rear brake pressure two seconds after adjusting the specified fluid pressure.

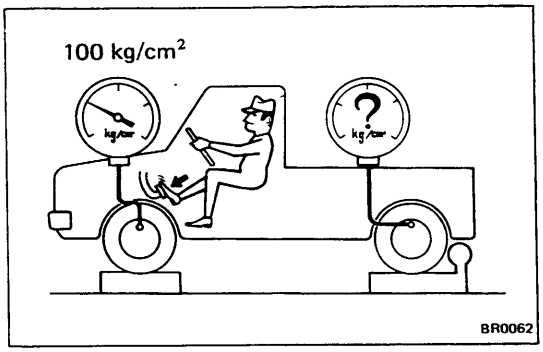

4. **RAISE FRONT BRAKE PRESSURE TO 100 kg/cm² (1,422 psi, 9,807 kPa) AND CHECK REAR BRAKE PRESSURE**

Rear brake pressure:
2WD 56±7 kg/cm² (796±100 psi, 5,492±686 kPa)
4WD 55±7 kg/cm² (782±100 psi, 5,394±686 kPa)

If the brake pressure is incorrect, adjust the fluid pressure.

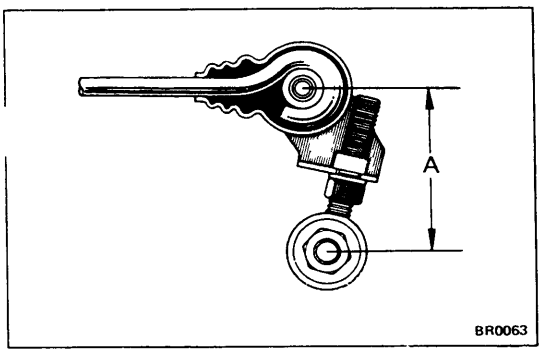

5. **IF NECESSARY, ADJUST FLUID PRESSURE**

(a) Adjust the length of the No.2 shackle.

Low pressure —— Lengthen A
High pressure —— Shorten A

Initial set:
2WD 78mm (3.07 in.)
4WD 120mm (4.72 in.)

Adjusting range:
2WD 72 — 84 mm (2.83 — 3.31 in.)
4WD 114 — 126 mm (4.49 — 4.96 in.)

NOTE: One turn of the No.2 shackle changes the fluid pressure about 0.6 kg/cm² (8.5 psi, 59 kPa).

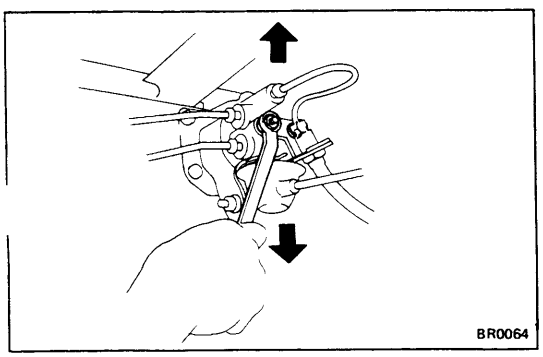

(b) In event the pressure cannot be adjusted by the No.2 shackle,raise or lower the valve body.

Low pressure — Lower
High pressure — Raise

(c) Torque the nuts.

Torque: 130 kg-cm (9 ft-lb, 13 N·m)

(d) Adjust the length of the No.2 shackle again.

If it cannot be adjusted, inspect the valve housing.

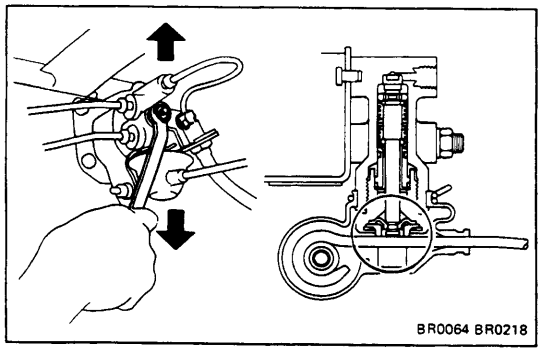

6. IF NECESSARY,CHECK VALVE BODY

(a) Assmble the valve body in the uppermost positior

NOTE: When the brakes are applied,the piston will mov down about 1 mm (0.04 in.).Even at this time,the piston should not make contact with or move the load sensing spring.

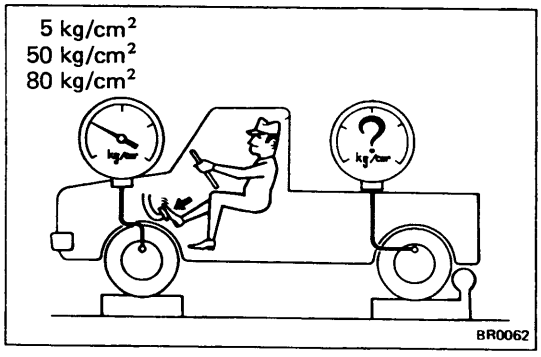

(b) In this position,check the rear brake pressure.

kg/cm² (psi,kPa)

Front brake pressure	Rear brake pressure
5 (71, 490)	5 (71, 490)
50 (711, 4,903)	19.7—23.7 (280—337, 1,932—2,324)
80 (1,138, 7,845)	29.8—35.8 (424—509, 2,922—3,511)

If the measured value is not within standard,replace the valve body.

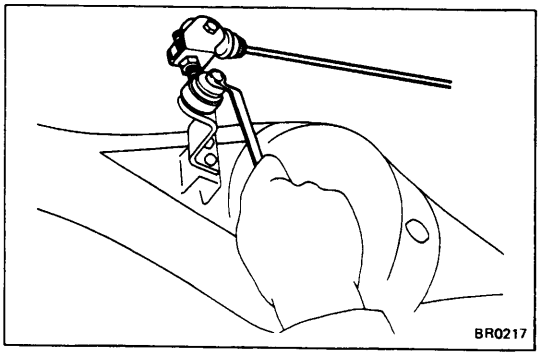

REMOVAL OF LSP & BV OR LSPV

(See page BR-50)

1. DISCONNECT SHACKLE NO.2 FROM BRACKET

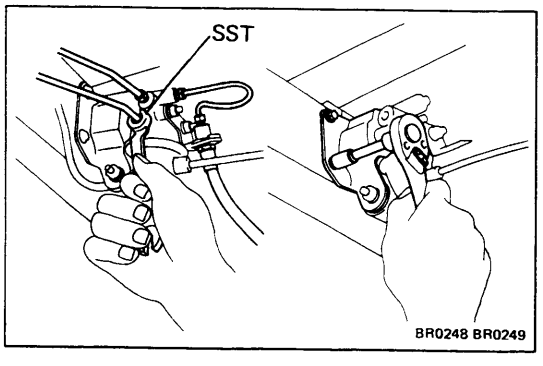

2. REMOVE LSP & BV (LSPV) ASSEMBLY

(a) Using SST, disconnect the brake tube from the valve body.

SST 09751-36011

(b) Remove the valve bracket mounting bolts and remove the LSP & BV (LSPV) assembly.

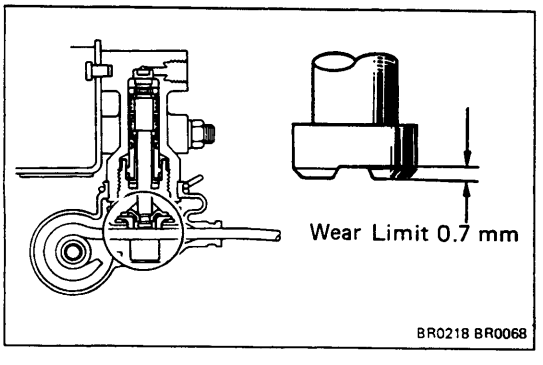

INSPECTION OF LSP & BV OR LSPV

INSPECT VALVE PISTON PIN AND LOAD SENSING CONTACT SURFACE FOR WEAR

Wear limit: 0.7 mm (0.028 in.)

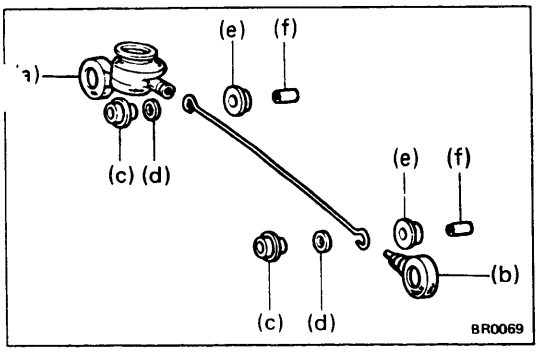

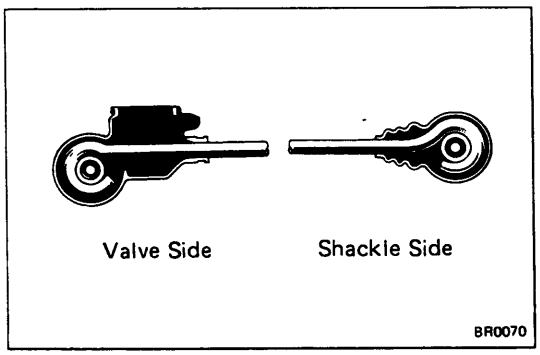

INSTALLATION OF LSP & BV OR LSPV

(See page BR-50)

1. **ASSEMBLE FOLLOWING PARTS TO LOAD SENSING SPRING:**
   - (a) Load sensing valve boot
   - (b) Load sensing spring boot
   - (c) Bushings
   - (d) Rubber plates
   - (e) Bushings
   - (f) Collars

   NOTE: Apply rubber grease to all rubbing areas.
   Do not mistake the valve side for the shackle side of the load sensing spring.

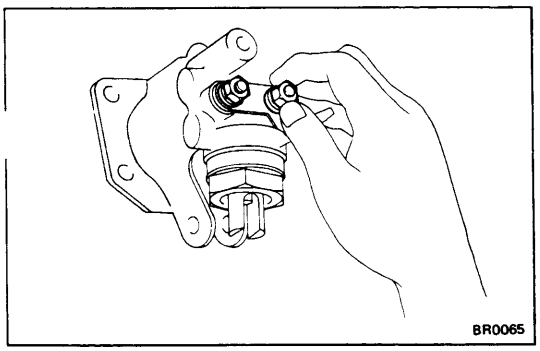

2. **ASSEMBLE VALVE BODY TO BRACKET**

   Assemble the valve body to the valve body bracket.

   NOTE: Finger tighten the valve body mounting nuts.

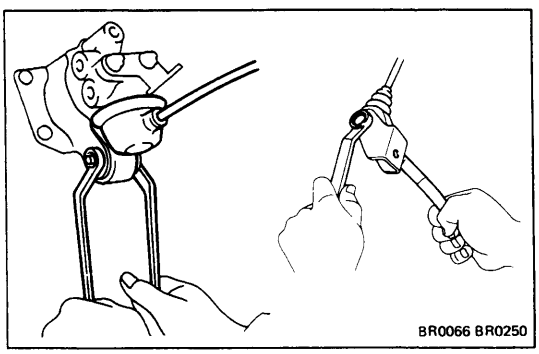

3. **CONNECT VALVE BODY AND NO.1 SHACKLE TO LOAD SENSING SPRING**

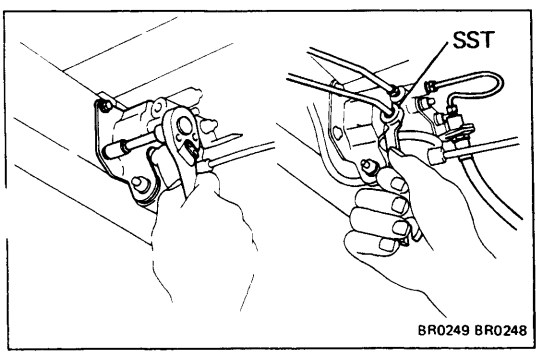

4. **INSTALL LSP & BV (LSPV) ASSEMBLY TO FRAME**

   Torque: 195 kg-cm (14 ft-lb, 19 N·m)

5. **CONNECT BRAKE TUBE**

   Using SST, connect the brake tubes.

   Torque the nut.

   Torque: 155 kg-cm (11 ft-lb, 15 N·m)

   SST 09751-36011

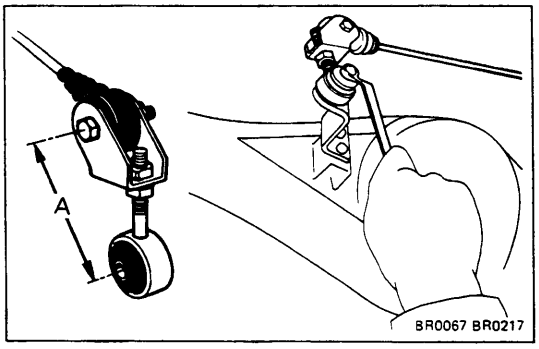

6. CONNECT SHACKLE NO.2 TO BRACKET

(a) Install shackle No. 1 and shackle No.2 to the load sensing spring.

(b) Set dimension A by turning shackle No.2.

Initial set: 2WD 78 mm (3.07 in.)
4WD 120 mm (4.72 in.)

(c) Connect shackle No. 2 to the shackle bracket.

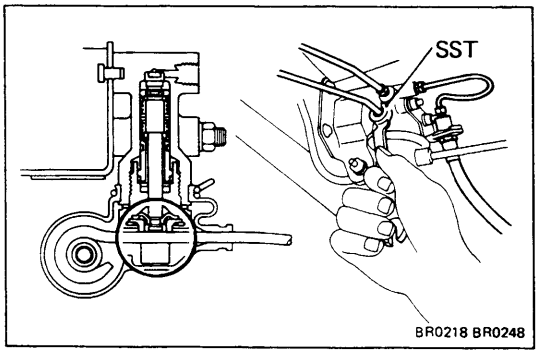

7. SET REAR AXLE LOAD (See page BR-50)

8. SET VALVE BODY

(a) When pulling down the load sensing spring,confirm that the valve piston moves down smoothly.

(b) Position the valve body so that the valve piston lightly contacts load sensing spring.

(c) Tighten the valve body mounting nuts.

9. BLEED BRAKE LINE (See page BR-6)

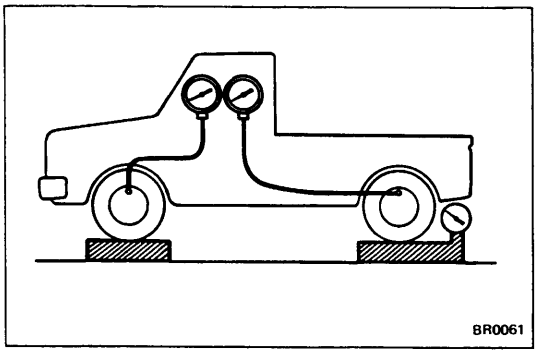

10. CHECK AND ADJUST LSP & BV FLUID PRESSURE (See page BR-50)

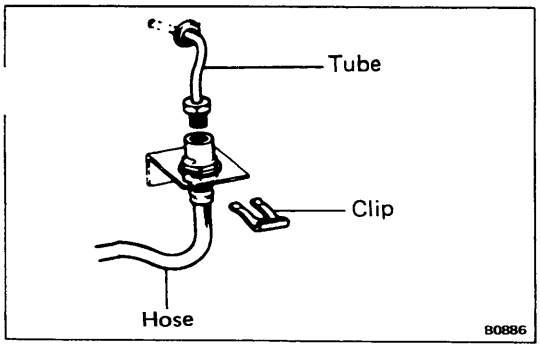

BRAKE HOSES AND TUBES

DISCONNECT AND CONNECT HOSE AND TUBE

1. DISCONNECT HOSE AND TUBE

(a) Disconnect the clip.

(b) Using a wrench to hold the hose and SST to hold the tube,disconnect the tube and hose.

SST 09751-36011

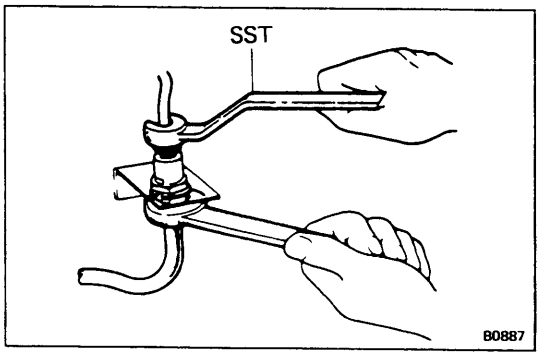

2. CONNECT HOSE AND TUBE

(a) Connect the hose and tube by hand.

(b) Using a wrench to hold the hose and SST to hold the tube, torque the connection.

SST 09751-36011

Torque: 155 kg-cm (11 ft-lb,15 N·m)

(c) Install a new hose clip.

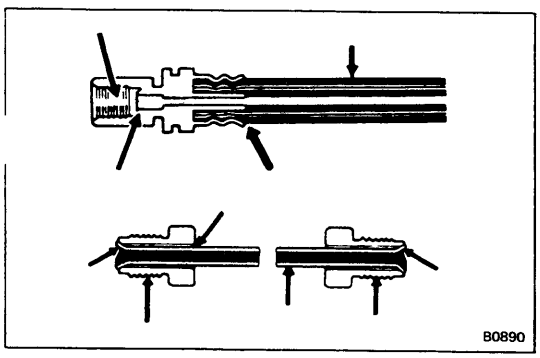

INSPECTION OF BRAKE HOSES AND TUBES

1. INSPECT BRAKE HOSES

(a) Inspect the hose for damage,cracks or swelling.

(b) Inspect the threads for damage.

2. INSPECT BRAKE TUBES

(a) Inspect the tube for damage,cracks,dents or corrosion.

(b) Inspect the threads for damage.

STEERING

	Page
PRECAUTIONS	SR-2
TROUBLESHOOTING	SR-2
ON-VEHICLE INSPECTION	SR-3
STEERING COLUMN ASSEMBLY (2WD)	SR-4
STEERING COLUMN ASSEMBLY (4WD)	SR-11
STEERING COLUMN ASSEMBLY WITH TILT STEERING	SR-18
STEERING GEAR HOUSING (2WD)	SR-25
STEERING GEAR HOUSING (4WD)	SR-33
POWER STEERING	SR-41
On-Vehicle Inspection	SR-41
Bleeding of Power Steering System	SR-43
Oil Pressure Check	SR-43
Power Steering Pump	SR-45
Gear Housing (2WD)	SR-54
Gear Housing (4WD)	SR-61
STEERING LINKAGE (2WD)	SR-68
Pitman Arm	SR-68
Tie Rod	SR-69
Relay Rod	SR-70
Knuckle Arm	SR-71
Steering Damper	SR-72
Idler Arm Bracket	SR-73
STEERING LINKAGE (4WD)	SR-75
Pitman Arm	SR-75
Tie Rod	SR-76
Steering Damper	SR-77
Drag Link	SR-78
Knuckle Arm	SR-78

PRECAUTIONS

Care must be taken to replace parts properly because they co affect the performance of the steering system and result in a driving hazard.

TROUBLESHOOTING

Problem	Possible cause	Remedy	Page
Hard steering	Tires improperly inflated	Inflate tires to proper pressure	FA-3,25
	Excessive caster	Check front end alignment	FA-3,25
	Ball joints worn	Replace ball joints	FA-13
	Steering knuckle bearing worn	Replace knuckle bearing	FA-51
	Insufficient lubricant	Lubricate suspension and steering linkage	
	Steering linkage worn or bent	Check linkage	SR-68,75
	Steering gear out of adjustment or broken	Adjust or repair steering gear	SR-3,25,54
	Power steering belt loose	Tighten belt	SR-41
	Oil level in reservoir low	Check reservoir	SR-41
	Power steering fluid foaming	Check power steering fluid	SR-41
	Power steering unit faulty	Check power steering unit	SR-41
	Steering column binding	Check steering column	SR-4
Poor return	Tire improperly inflated	Inflate tires to proper pressure	FA-3,25
	Wheel alignment incorrect	Check front end alignment	FA-3,25
	Steering column binding	Check steering column	SR-4
	Insufficient lubricant	Lubricate suspension and steering linkage	
	Steering gear out of adjustment or broken	Adjust or repair steering gear	SR-3,25,54
Excessive play	Steering linkage worn	Check linkage	SR-68,75
	Steering gear loose	Tighten gear bolts	
	Steering shaft coupling worn	Inspect coupling	
	Ball joints worn	Replace ball joint	FA-13
	Steering knuckle bearing worn	Replace knuckle bearing	FA-46
	Steering gear out of adjustment or broken	Adjust or repair steering gear	SR-3,25,54

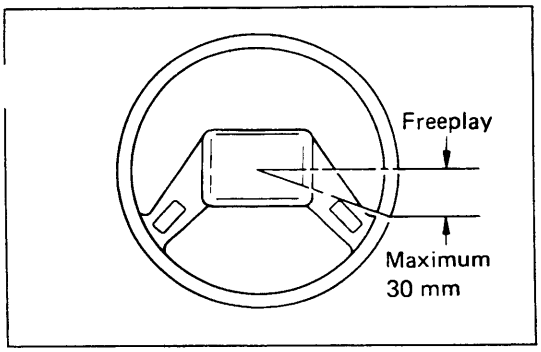

ON-VEHICLE INSPECTION

STEERING WHEEL FREEPLAY

1. **CHECK THAT STEERING WHEEL FREEPLAY IS CORRECT**

With the vehicle stopped and pointed straight ahead, rock the steering wheel gently back and forth with light finger pressure. Freeplay should not exceed the maximum limit.

Maximum play: 30 mm (1.18 in.)

If incorrect, adjust or repair as required.

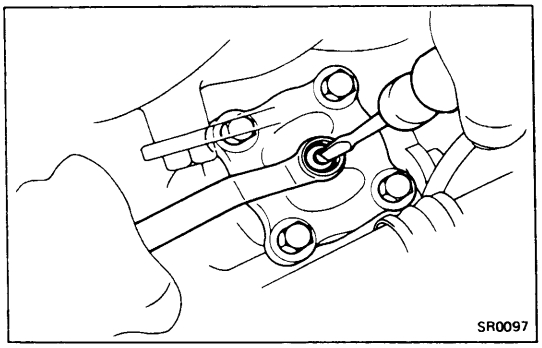

2. **POINT WHEELS STRAIGHT AHEAD**

3. **ADJUST STEERING GEAR BOX**

(a) Loosen the lock nut.

(b) Turn the adjusting screw clockwise to decrease wheel freeplay and counterclockwise to increase it.

NOTE: Turn the adjusting screw in small increments and check the wheel freeplay between each adjustment.

4. **CHECK THAT STEERING DOES NOT BIND**

Turn the steering wheel half way around in both directions.

Check that the freeplay is correct and steering is smooth and without rough spots.

5. **HOLD ADJUSTING SCREW AND TIGHTEN LOCK NUT**

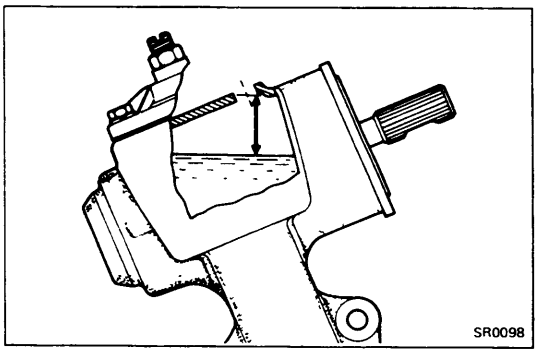

OIL LEVEL

CHECK STEERING GEAR BOX OIL LEVEL

Oil level:

2WD 18 – 28 mm (0.71 – 1.10 in.) from top
4WD 12 – 17 mm (0.47 – 0.67 in.) from top

If low, fill with gear oil and check for oil leaks.

STEERING COLUMN ASSEMBLY (2WD)

REMOVAL OF STEERING COLUMN ASSEMBLY

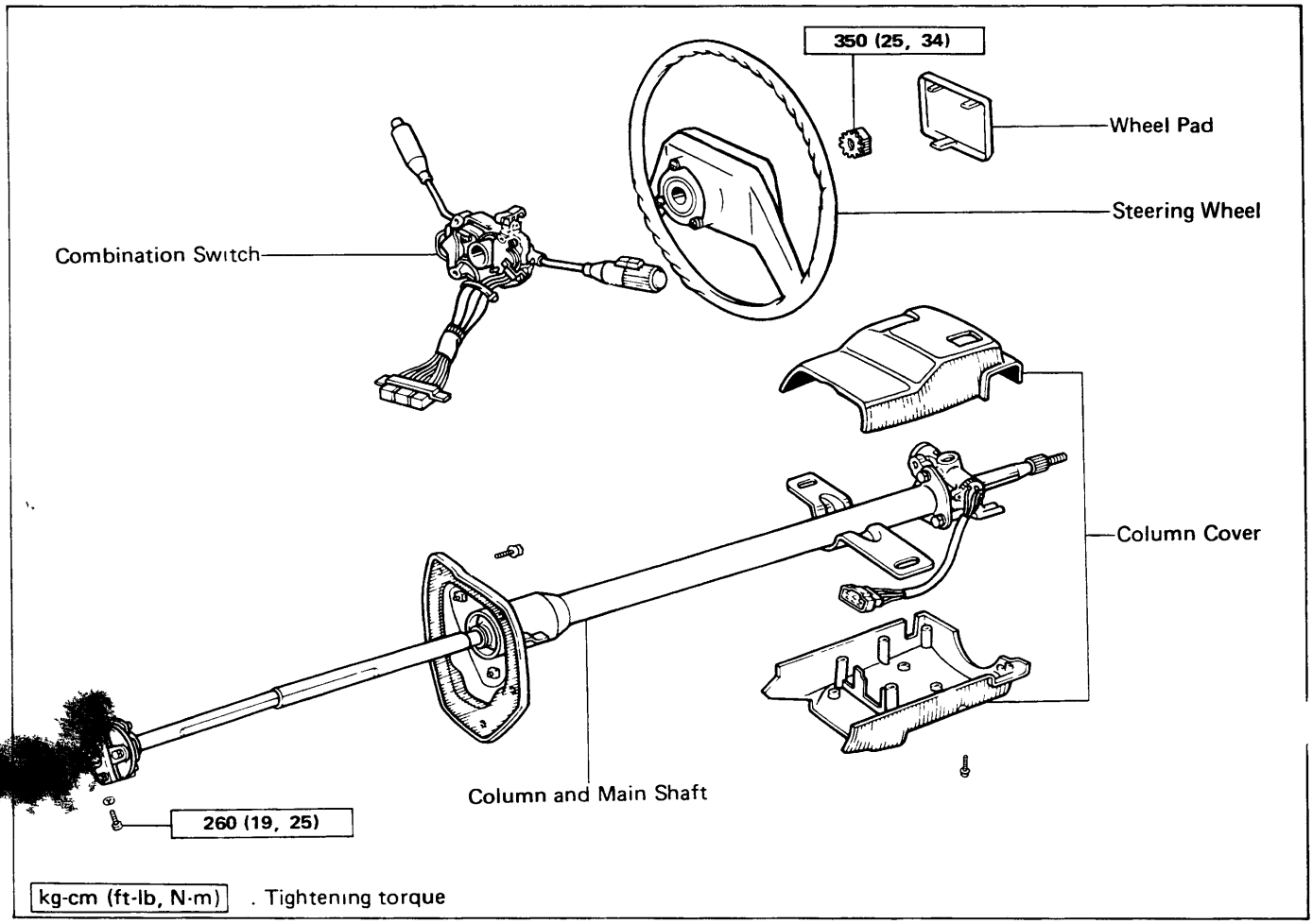

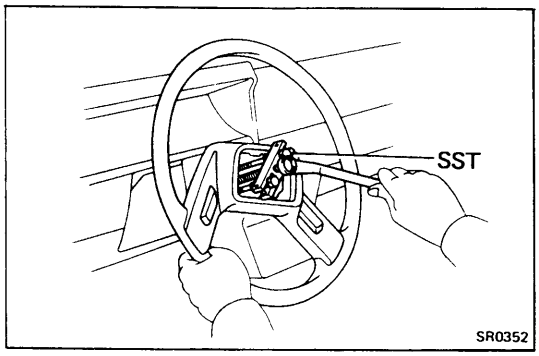

1. **DISCONNECT NEGATIVE CABLE FROM BATTERY**
2. **REMOVE COUPLING MOUNT BOLT**
3. **REMOVE STEERING WHEEL**
   (a) Remove the steering wheel pad.
   (b) Remove the steering wheel nut.
   (c) Using SST, remove the steering wheel.
   SST 09609-20011
4. **REMOVE INSTRUMENT LOWER FINISH PANEL AND AIR DUCT**
5. **REMOVE COLUMN COVER AND COMBINATION SWITCH**
6. **REMOVE FIVE BOLTS FROM COLUMN HOLE COVER**
7. **REMOVE MAIN SHAFT**
   Remove the mount bolts and pull out the main shaft.

COMPONENTS

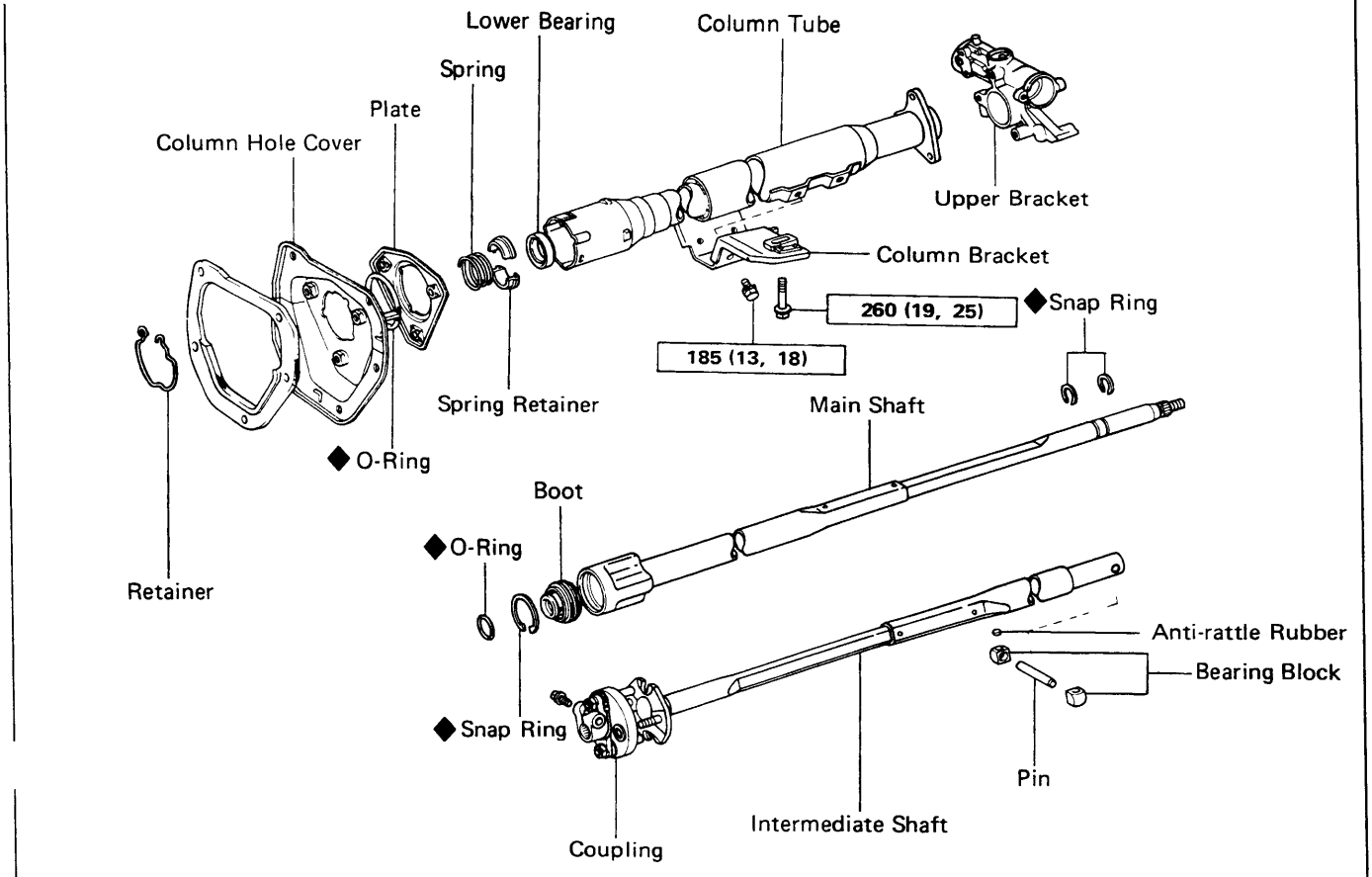

kg-cm (ft-lb, N·m) : Tightening torque

◆ : Non-reusable part

SR0484

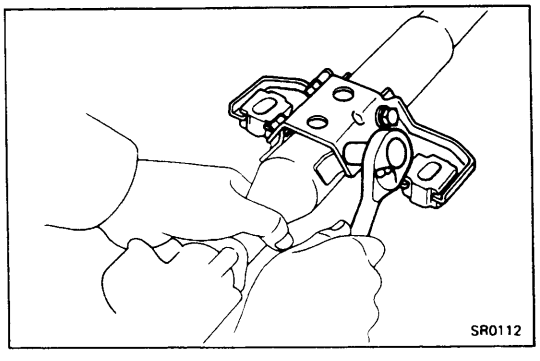

SR0112

DISASSEMBLY OF STEERING COLUMN ASSEMBLY

1. REMOVE STEERING COLUMN BRACKET

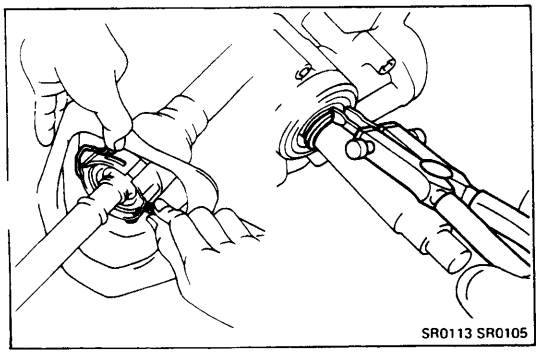

SR0113 SR0105

2. REMOVE STEERING MAIN SHAFT

(a) Remove the retainer.

(b) Using snap ring pliers, remove the snap ring.

(c) Pull out the steering main shaft with intermediate shaft.

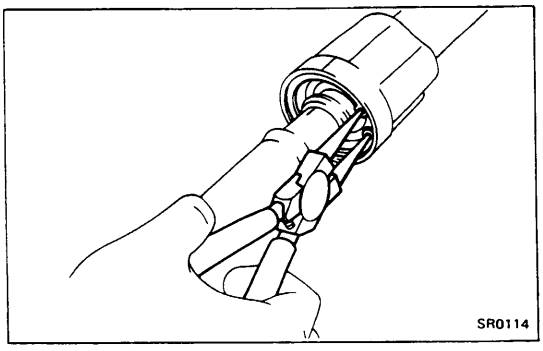

3. REMOVE INTERMEDIATE SHAFT FROM MAIN SHAFT

(a) Place matchmarks on the main shaft and intermediate shaft.

(b) Using snap ring pliers, remove the snap ring.

(c) Pull the intermediate shaft out of the main shaft.

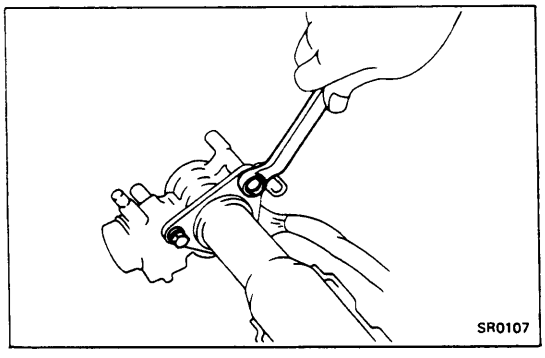

4. REMOVE UPPER BRACKET FROM COLUMN TUBE

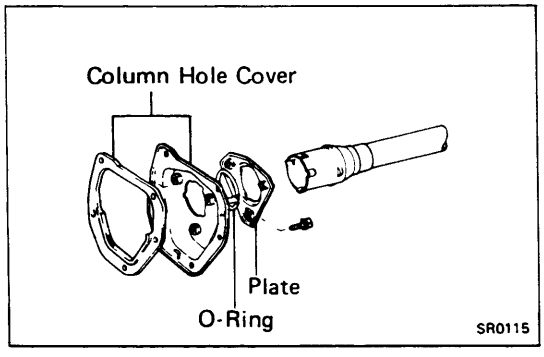

5. REMOVE COLUMN HOLE COVER FROM COLUMN TUBE

Remove the following parts from the column tube.

(a) Column hole cover

(b) O-ring

(c) Plate

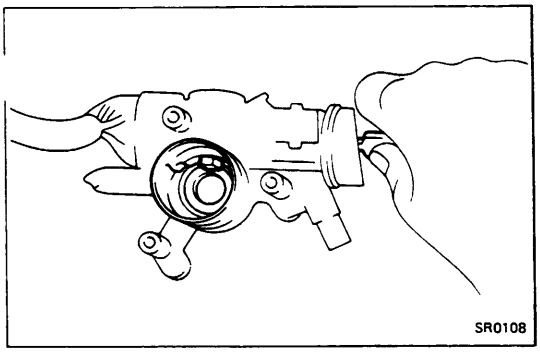

INSPECTION AND REPAIR OF STEERING COLUMN ASSEMBLY

1. INSPECT UPPER BRACKET

(a) Check that the steering lock mechanism operates properly.

(b) Check the upper bearing rotation condition and check for abnormal noise.
If the bearing is worn or damaged, replace the upper bracket.

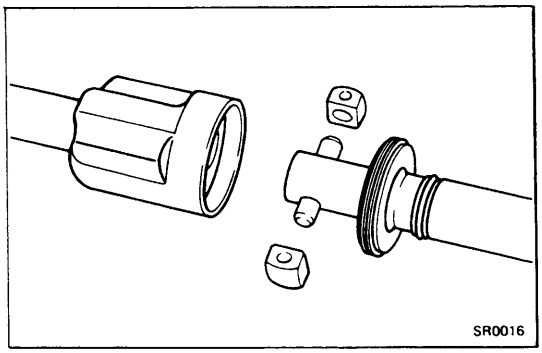

2. INSPECT TRUNNION JOINT

(a) Check the joint parts for wear or damage.

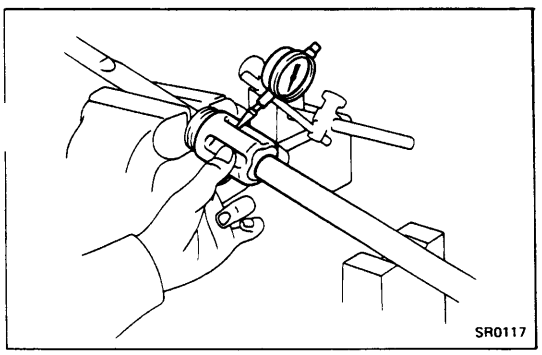

(b) Temporarily assemble the joint and measure the joint radial play with a dial indicator.

Maximum radial play: 0.06 mm (0.0024 in.)

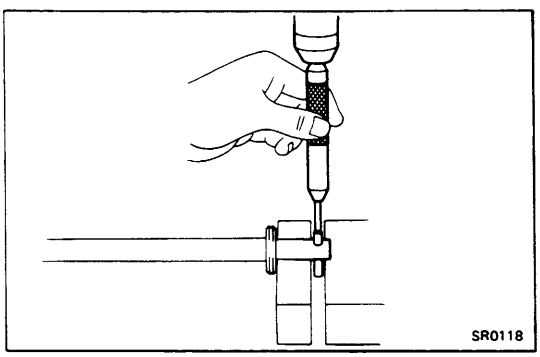

3. IF NECESSARY, REPLACE TRUNNION JOINT PARTS

(a) Using a press, remove the pin from the intermediate shaft.

(b) Replace the boot with a new one.

(c) Using a press, install the pin to the shaft until both protrusions are equal.

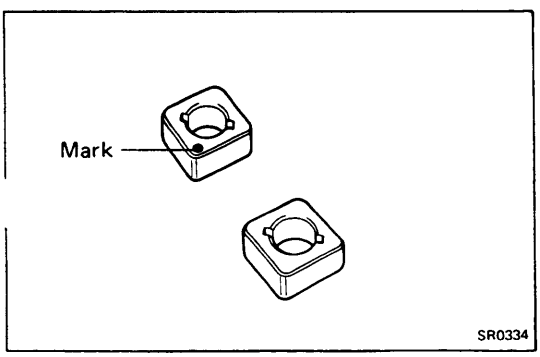

(d) Select a bearing block that will allow minimum radial play.

Bearing block width

Punch mark	width	mm (in.)
Yes	15.97 — 16.00	(0.6287 — 0.6299)
No	16.00 — 16.03	(0.6299 — 0.6311)

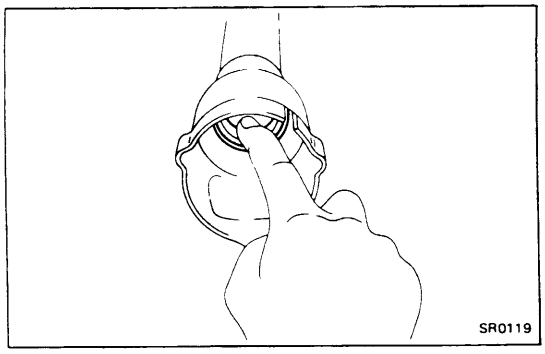

4. INSPECT MAIN SHAFT LOWER BEARING

Check the lower bearing for wear or damage.

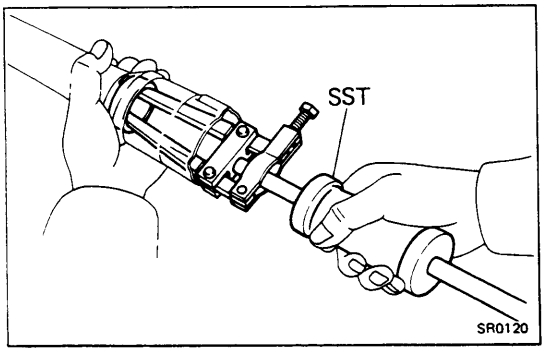

5. IF NECESSARY, REPLACE MAIN SHAFT LOWER BEARING

(a) Using SST, remove the lower bearing from the column tube.

SST 09308-00010

(b) Pack a new bearing with MP grease.

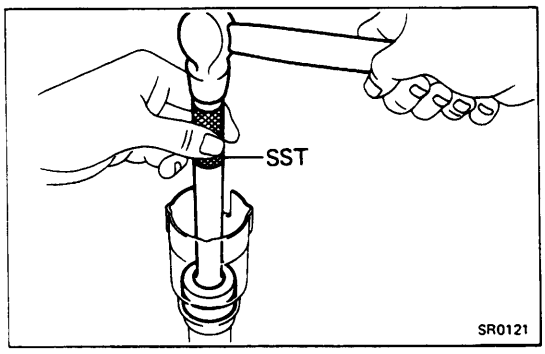

(c) Using SST, tap in a new bearing.

SST 09620-30010

ASSEMBLY OF STEERING COLUMN ASSEMBLY

(See page SR-5)

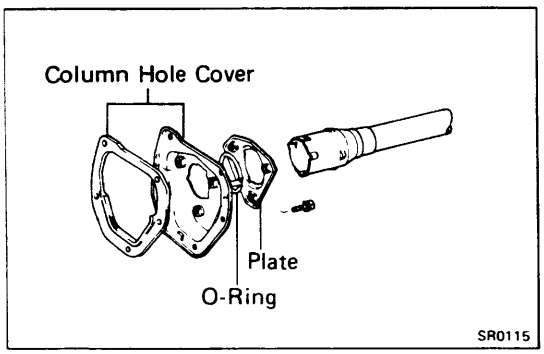

1. INSTALL COLUMN HOLE COVER TO COLUMN TUBE

Install the following parts on the column tube.

(a) Plate

(b) O-ring

(c) Column hole cover

NOTE: Align the protrusion so that it fits into the column tube groove.

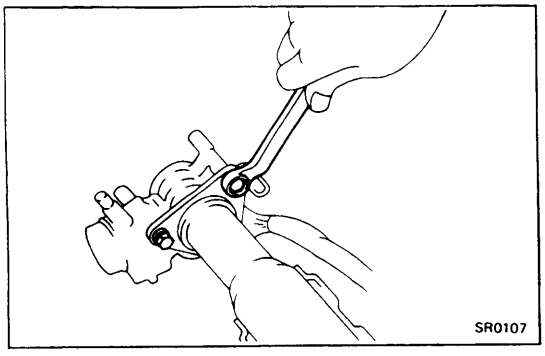

2. INSTALL UPPER BRACKET TO COLUMN TUBE

Install the upper bracket and torque the bolts.

Torque: 55 kg-cm (48 in.-lb, 5.4 N·m)

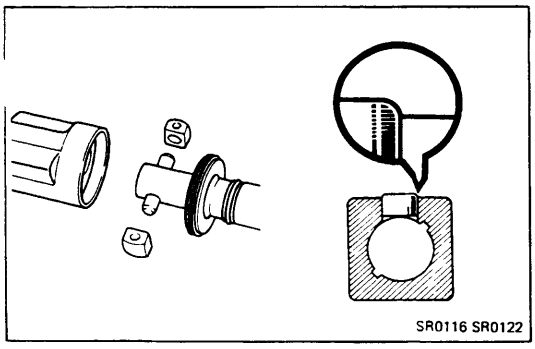

3. INSTALL INTERMEDIATE SHAFT TO MAIN SHAFT

(a) Pack MP grease on the bearing blocks and inner main shaft housing.

(b) Install the bearing blocks on the intermediate shaft.

(c) Insert the anti-rattle rubbers in the bearing blocks with the chamfered edge facing outward.

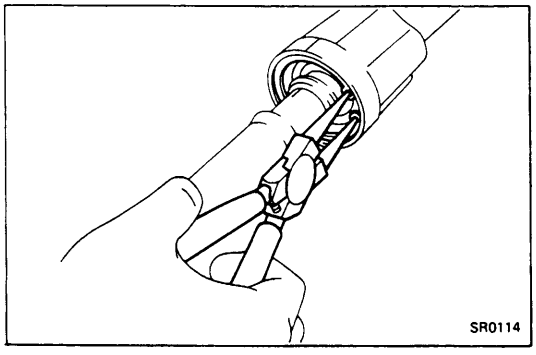

(d) Align the matchmarks on the intermediate shaft and main shaft.

(e) Insert the intermediate shaft in the main shaft housing with the anti-rattle rubbers positioned at right angle to the shaft and both facing same direction.

(f) Push in the boot and install the snap ring with snap ring pliers.

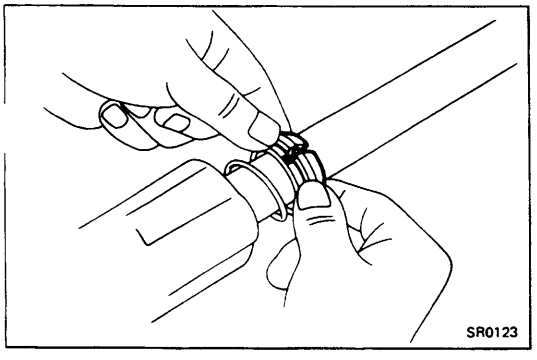

4. INSTALL SPRING AND SPRING RETAINER TO MAIN SHAFT

5. INSERT MAIN SHAFT IN COLUMN TUBE

Push the main shaft into the column tube.

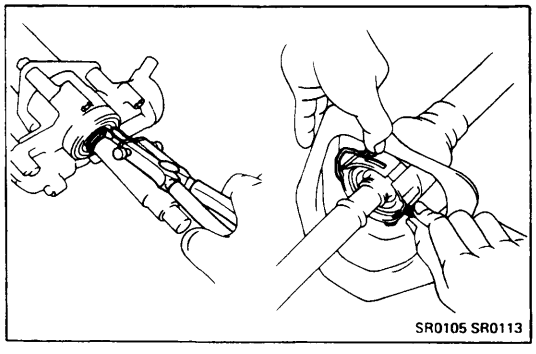

6. INSTALL SNAP RING

Using snap ring pliers, install the snap ring.

7. INSTALL RETAINER

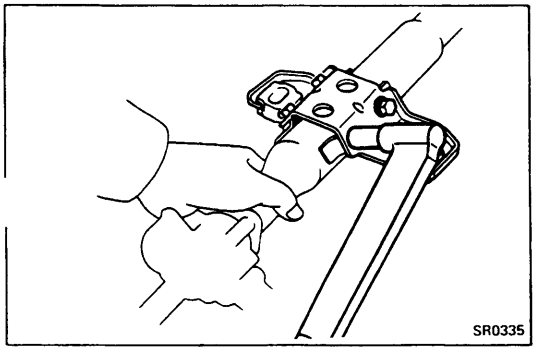

8. INSTALL COLUMN TUBE BRACKET

Tighten the column tube bracket mount bolts.

Torque: 195 kg-cm (14 ft-lb, 19 N·m)

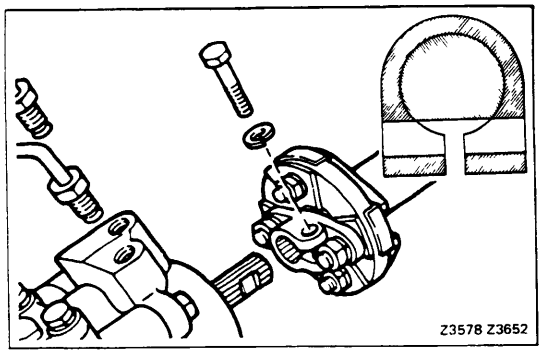

INSTALLATION OF STEERING COLUMN ASSEMBLY

(See page SR-4)

1. **PLACE COLUMN AND MAIN SHAFT IN INSTALLED POSITION**

2. **INSTALL COUPLING ON WORM SHAFT**

   Line up the marks on the coupling and worm shaft.

3. **INSTALL COLUMN BRACKET MOUNT BOLTS BY HAND**

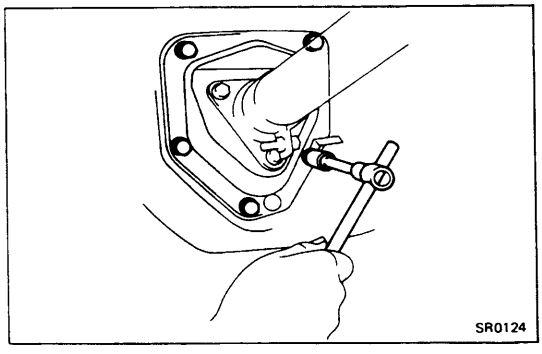

4. **INSTALL STEERING COLUMN HOLE COVER**

   Torque the five bolts.

   Torque: 75 kg-cm (65 in.-lb, 7.4 N·m)

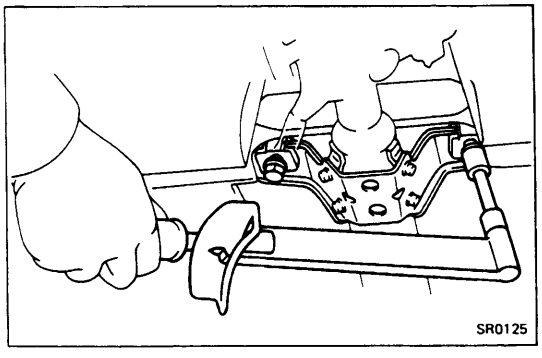

5. **TORQUE TWO COLUMN BRACKET MOUNT BOLTS**

   Torque: 260 kg-cm (19 ft-lb, 25 N·m)

6. **INSTALL COUPLING MOUNT BOLT**

   Install and torque the coupling mount bolt.

   Torque: 260 kg-cm (19 ft-lb, 25 N·m)

7. **INSTALL COMBINATION SWITCH AND COLUMN COVER**

8. **INSTALL AIR DUCT AND INSTRUMENT LOWER FINISH PANEL**

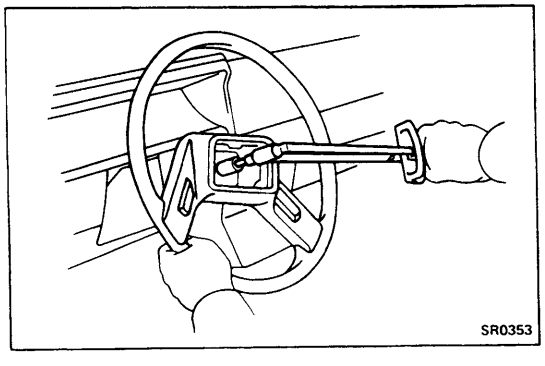

9. **INSTALL STEERING WHEEL**

   (a) Position the front wheels straight ahead and install the steering wheel in neutral position.

   (b) Torque the nut.

   Torque: 350 kg-cm (25 ft-lb, 34 N·m)

   (c) Install the steering wheel pad.

10. **CONNECT NEGATIVE CABLE TO BATTERY**

STEERING COLUMN ASSEMBLY(4WD)

REMOVAL OF STEERING COLUMN ASSEMBLY

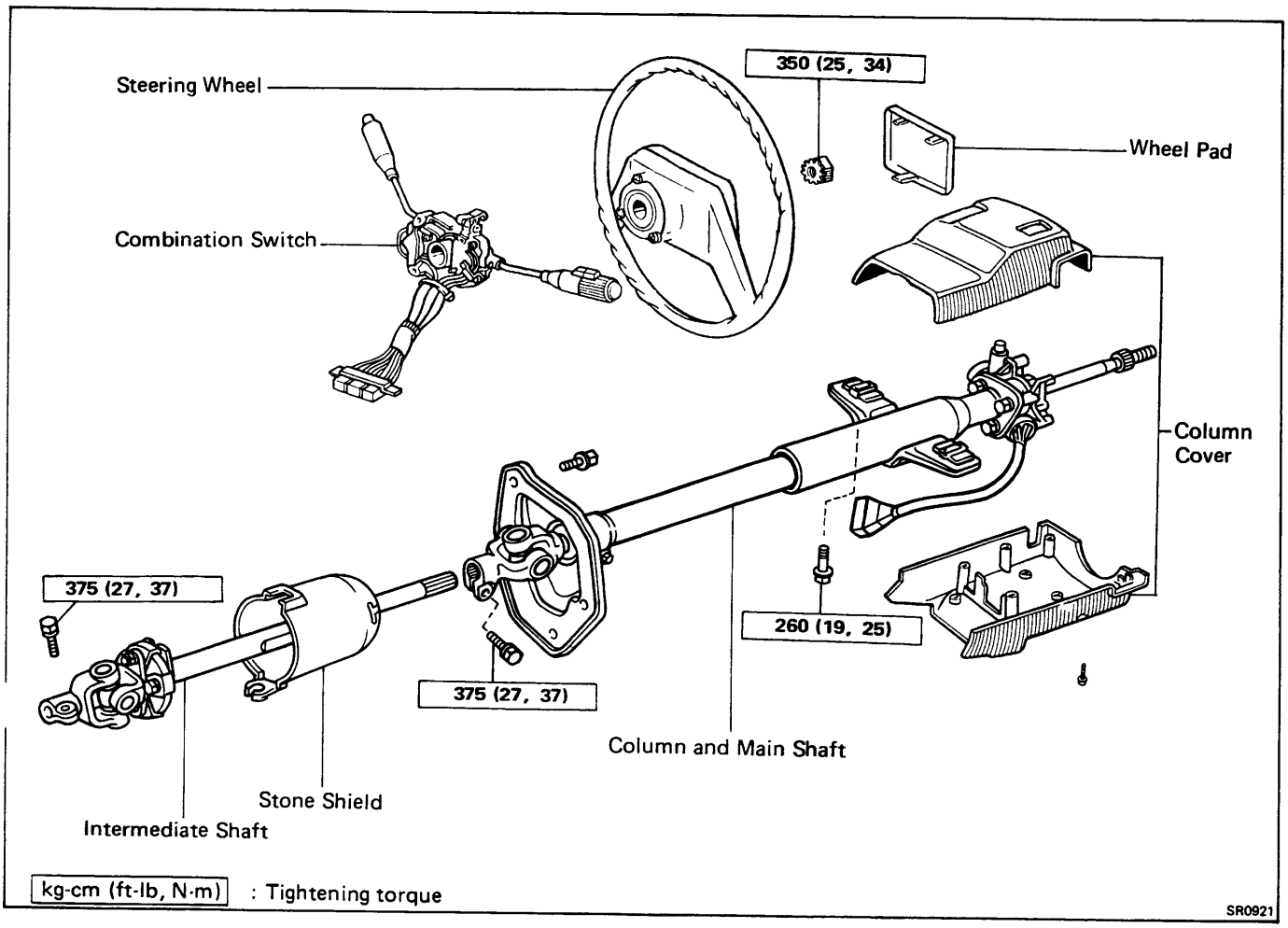

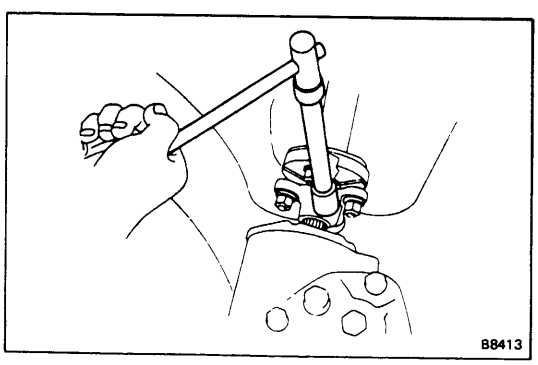

1. **DISCONNECT NEGATIVE CABLE FROM BATTERY**

2. **REMOVE INTERMEDIATE SHAFT**
   (a) Remove the stone shield from the gear housing.
   (b) Place matchmarks on the joint yoke and worm shaft.
   (c) Remove the two mount bolts.
   (d) First pull the intermediate shaft from the gear housing, and then pull it out from the main shaft.

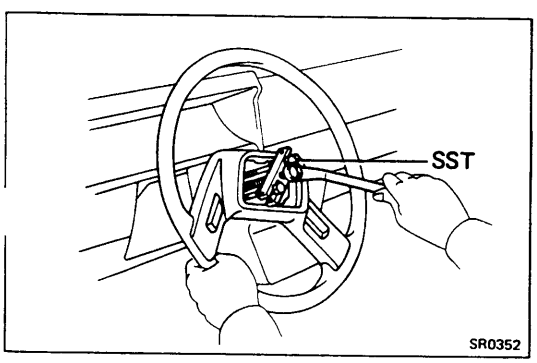

3. **REMOVE STEERING WHEEL**
   (a) Remove the steering wheel pad.
   (b) Remove the steering wheel nut.
   (c) Using SST, remove the steering wheel.
   SST 09609-20011

4. REMOVE INSTRUMENT LOWER FINISH PANEL AND AIR DUCT

5. REMOVE COLUMN COVER AND COMBINATION SWITCH

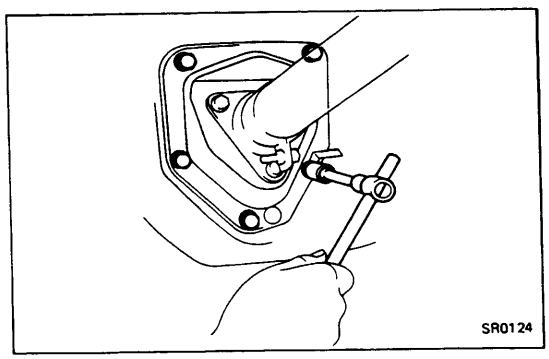

6. REMOVE FIVE BOLTS FROM COLUMN HOLE COVER

7. REMOVE MAIN SHAFT
   (a) Remove the mount bolts.
   (b) Pull out the main shaft.

COMPONENTS

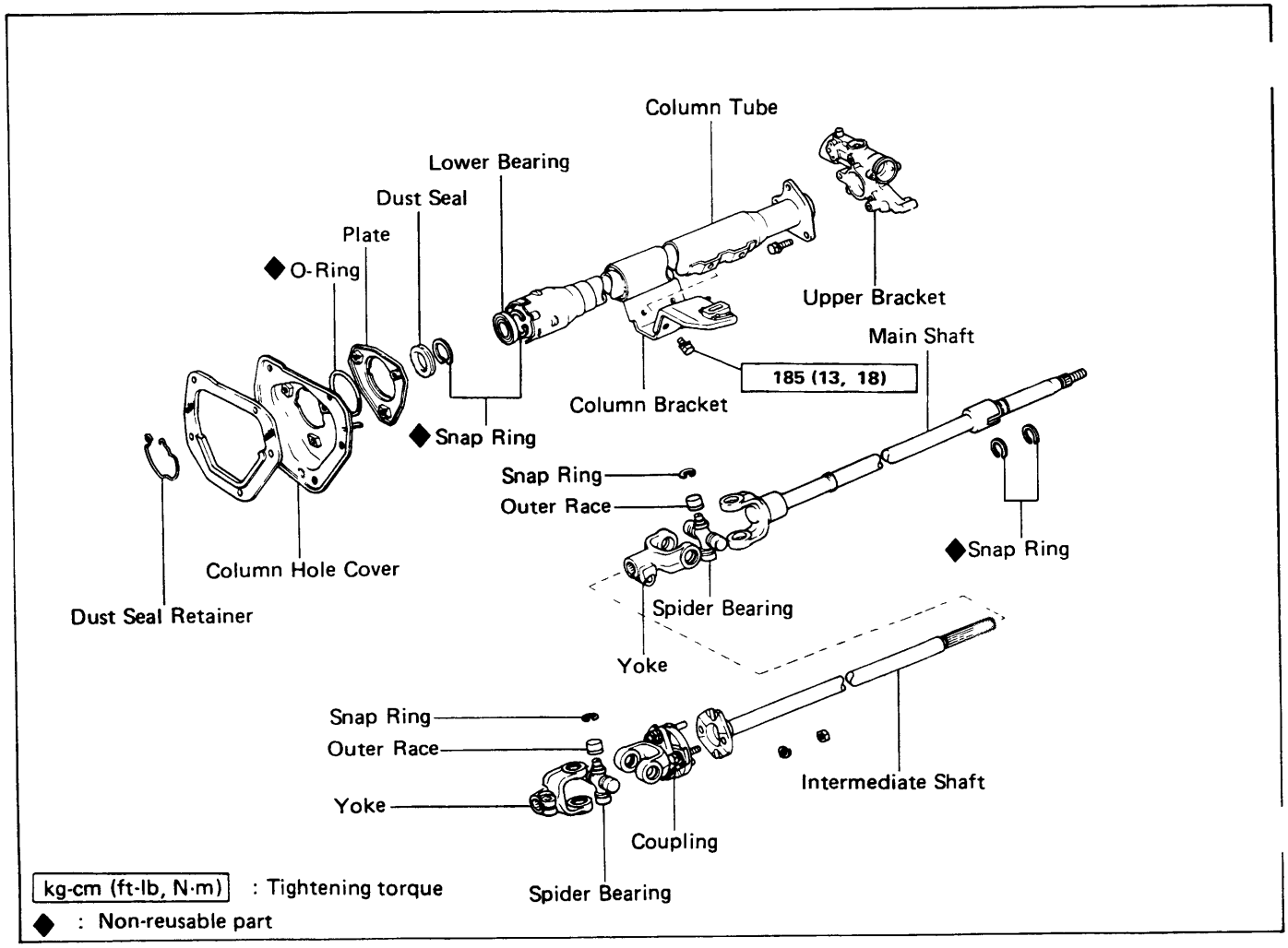

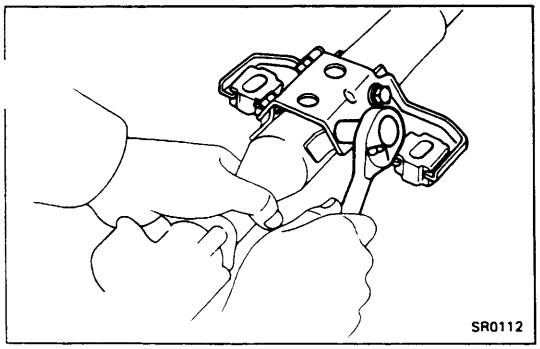

DISASSEMBLY OF STEERING COLUMN ASSEMBLY

1. REMOVE STEERING COLUMN BRACKET

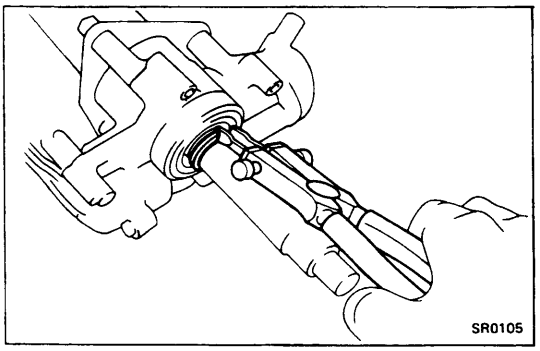

2. REMOVE STEERING MAIN SHAFT

(a) Using snap ring pliers, remove the snap ring.
(b) Remove the dust seal retainer.
(c) Pull out the main shaft.

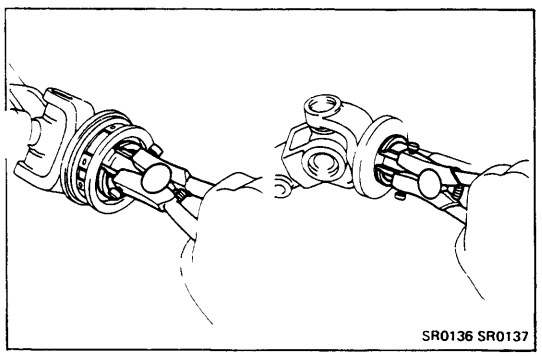

3. REMOVE LOWER BEARING AND DUST SEAL

(a) Using snap ring pliers, remove the snap ring.
(b) Pull out the lower bearing from the main shaft.
(c) Remove the other snap ring.
(d) Remove the dust seal.

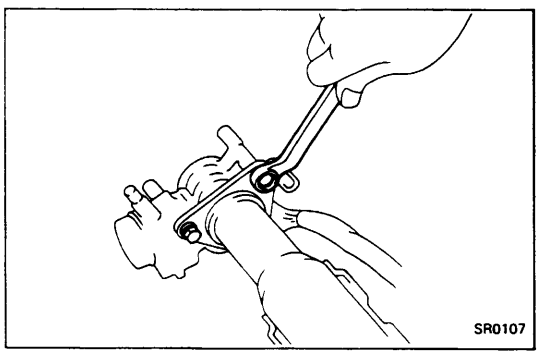

4. REMOVE UPPER BRACKET FROM COLUMN TUBE

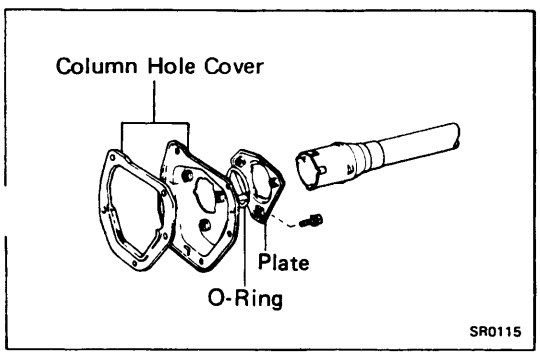

5. REMOVE COLUMN HOLE COVER FROM COLUMN TUBE

Remove the following parts from the column tube.
(a) Column hole cover
(b) O-ring
(c) Plate

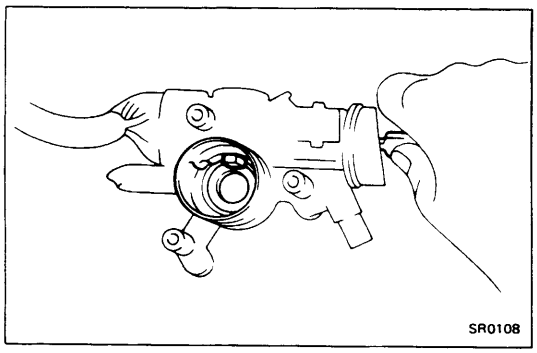
SR0108

INSPECTION AND REPAIR OF STEERING COLUMN ASSEMBLY

1. INSPECT UPPER BRACKET

(a) Check that the steering lock mechanism operates properly.

(b) Check the upper bearing rotation condition and check for abnormal noise.

If the bearing is worn or damaged, replace the upper bracket.

2. INSPECT LOWER BEARING

Check the lower bearing for wear or damage.
If the bearing is worn or damaged, replace it.

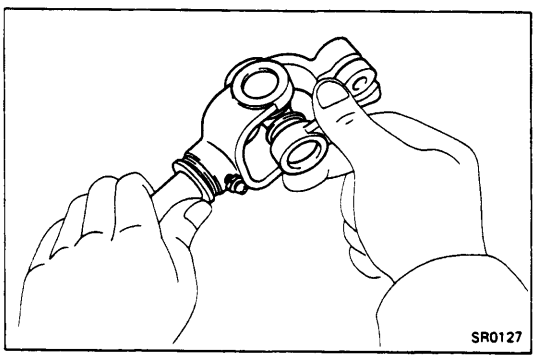
SR0127

3. INSPECT SPIDER BEARINGS

(a) Inspect the spider bearings for wear or damage.

(b) Check the spider bearing axial play by turning the yoke while holding the shaft tightly.

Bearing axial play: Less than 0.05 mm (0.0020 in.)

If necessary, replace the spider bearing.

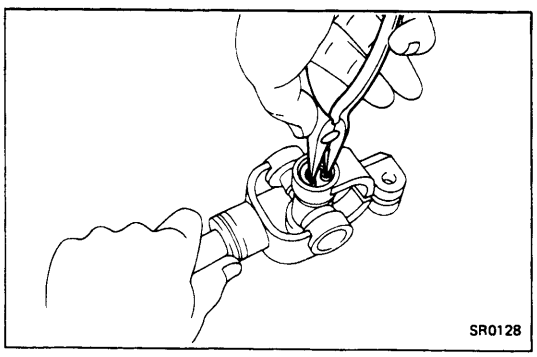
SR0128

4. IF NECESSARY, REPLACE SPIDER BEARING

(a) Using needle-nose pliers, remove the four snap rings.

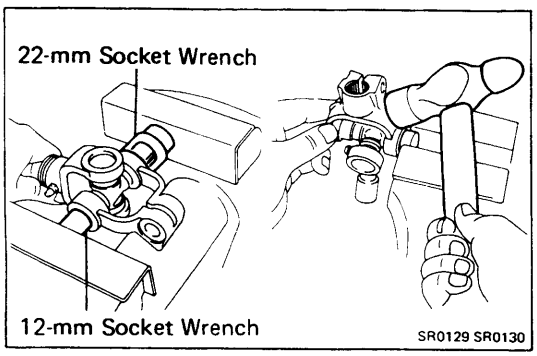

SR0129 SR0130

(b) Using a 12-mm and 22-mm socket wrench and vise, press out the yoke side outer race.

(c) Clamp the outer race in a vise and tap off the yoke with a hammer.

NOTE: Remove the other bearing races in the same procedure.

(d) Apply molybdenum disulphide lithium base grease to the spider and bearings.

NOTE: Be careful not to apply too much grease.

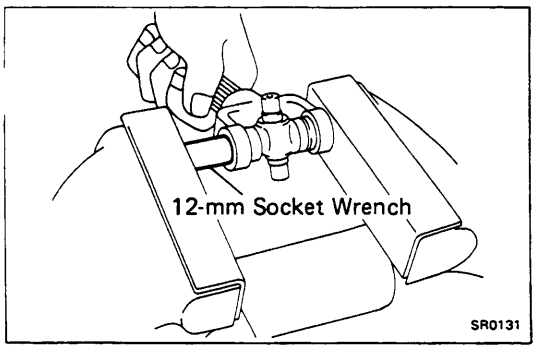

(e) Using a 12-mm socket wrench and vise, press the bearing outer race.

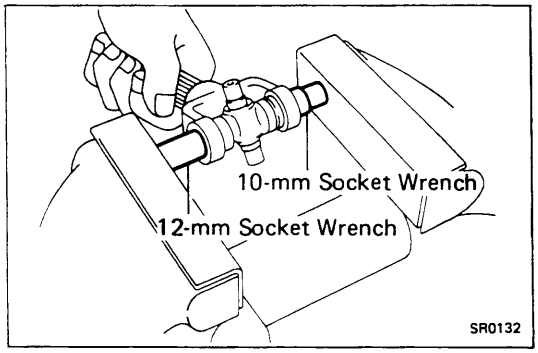

(f) Using a 10-mm and 12-mm socket wrench, adjust both bearings so that the snap ring grooves are at maximum and equal widths.

(g) Select two snap rings with the same thickness, which will allow 0 — 0.05 mm (0 — 0.0020 in.) axial play.

NOTE: Do not reuse the snap rings.

Thickness of snap ring

Mark	Thickness mm (in.)
None	1.175 — 1.225 (0.0463 — 0.0482)
Brown	1.225 — 1.275 (0.0482 — 0.0502)
Blue	1.275 — 1.325 (0.0502 — 0.0522)

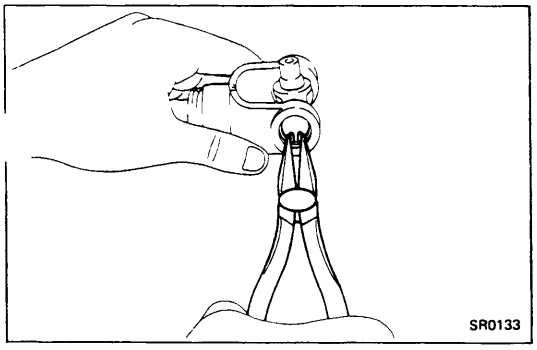

(h) Using needle-nose pliers, install the snap rings.

NOTE: Install the bearing outer races in the yoke side in the same procedure.

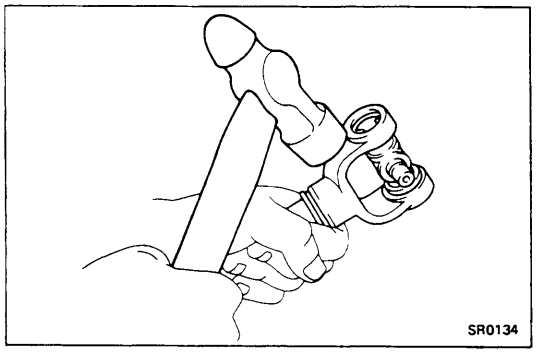

(i) Using a hammer, tap the shaft and yoke until the clearance between the bearing outer race and snap ring is zero.

(j) Check the spider bearing.

- Check that the spider bearing moves smoothly.
- Check the spider bearing axial play.

Bearing axial play: Less than 0.05 mm (0.0020 in.)

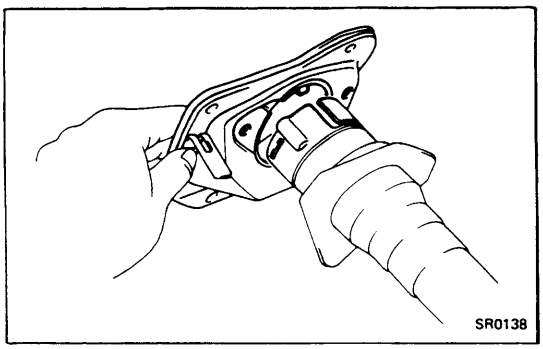

ASSEMBLY OF STEERING COLUMN ASSEMBLY

(See page SR-12)

1. INSTALL COLUMN HOLE COVER ON COLUMN TUBE

Install the following parts on the column tube.

(a) Plate

(b) O-ring

(c) Column hole cover

NOTE: Align the protrusion so that it fits into the column tube groove.

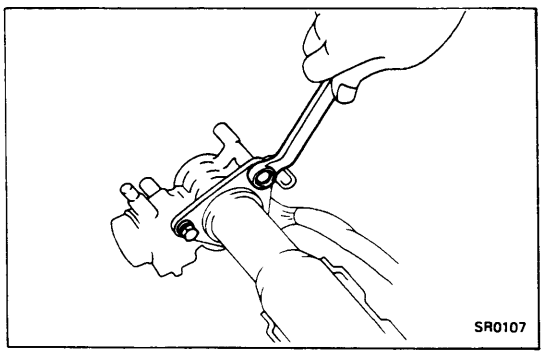

2. INSTALL UPPER BRACKET TO COLUMN TUBE

Install the upper bracket and the bolts.

Torque: 55 kg-cm (48 in-lb, 5.4 N·m)

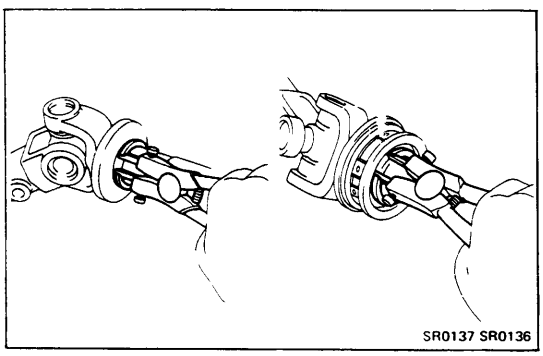

3. INSTALL DUST SEAL AND LOWER BEARING TO MAIN SHAFT

(a) Apply MP grease to the main shaft and install the dust seal.

(b) Using snap ring pliers, install the snap ring.

(c) Install the lower bearing to the main shaft.

(d) Using snap ring pliers, install the snap ring.

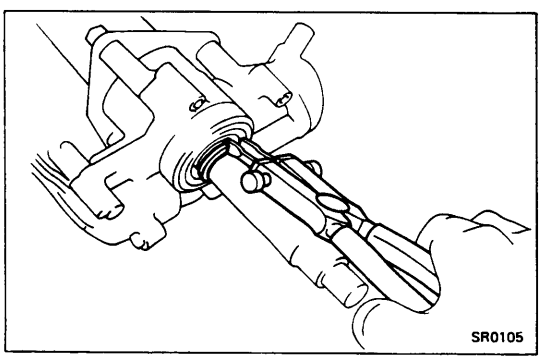

4. INSTALL MAIN SHAFT TO COLUMN TUBE

(a) Insert the main shaft in the column tube.

(b) Install the dust seal retainer to the column tube.

(c) Using snap ring pliers, install the snap ring.

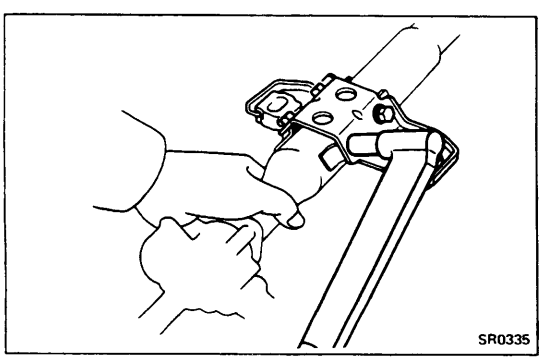

5. INSTALL COLUMN TUBE BRACKET

Torque the four mount bolts.

Torque: 195 kg-cm (14 ft-lb, 19 N·m)

INSTALLATION OF STEERING COLUMN ASSEMBLY

(See page SR-11)

1. PLACE COLUMN AND MAIN SHAFT IN INSTALLED POSITION

2. INSTALL COLUMN BRACKET MOUNT BOLTS BY HAND

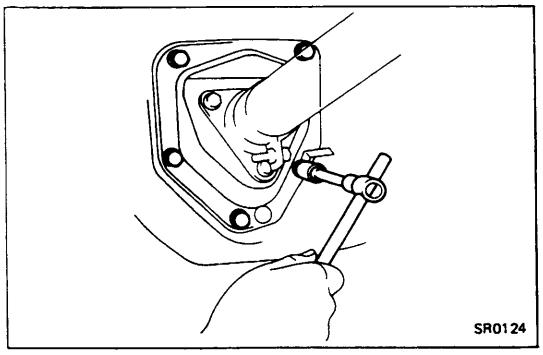

3. INSTALL STEERING COLUMN HOLE COVER

   Torque the five bolts.

   Torque: 75 kg-cm (65 in.-lb, 7.4 N·m)

4. TORQUE TWO COLUMN BRACKET MOUNT BOLTS

   Torque: 260 kg-cm (19 ft-lb, 25 N·m)

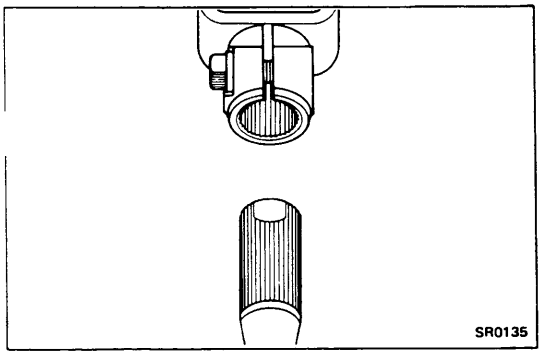

5. INSTALL INTERMEDIATE SHAFT

   (a) Align the non-toothed portions of the intermediate shaft and the joint yoke.

   (b) Insert the intermediate shaft in the joint yoke.

   (c) Align the matchmarks on the intermediate shaft and worm shaft.

   (d) Torque the coupling mount bolt.

   Torque: 375 kg-cm (27 ft-lb, 37 N·m)

   (e) Torque the joint yoke bolt.

   Torque: 375 kg-cm (27 ft-lb, 37 N·m)

   (f) Install the stone shield to the gear housing.

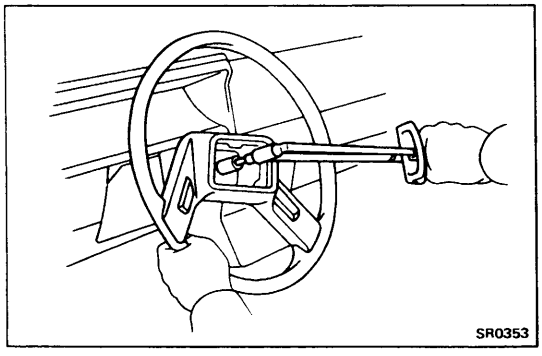

6. INSTALL COMBINATION SWITCH AND COLUMN COVER

7. INSTALL AIR DUCT AND LOWER FINISH PANEL

8. INSTALL STEERING WHEEL

   (a) Torque the mount nut.

   Torque: 350 kg-cm (25 ft-lb, 34 N·m)

   (b) Install the steering wheel pad.

9. CONNECT NEGATIVE CABLE TO BATTERY

STEERING COLUMN ASSEMBLY WITH TILT STEERING

REMOVAL OF STEERING COLUMN ASSEMBLY

(See page SR-4 or SR-11)

COMPONENTS

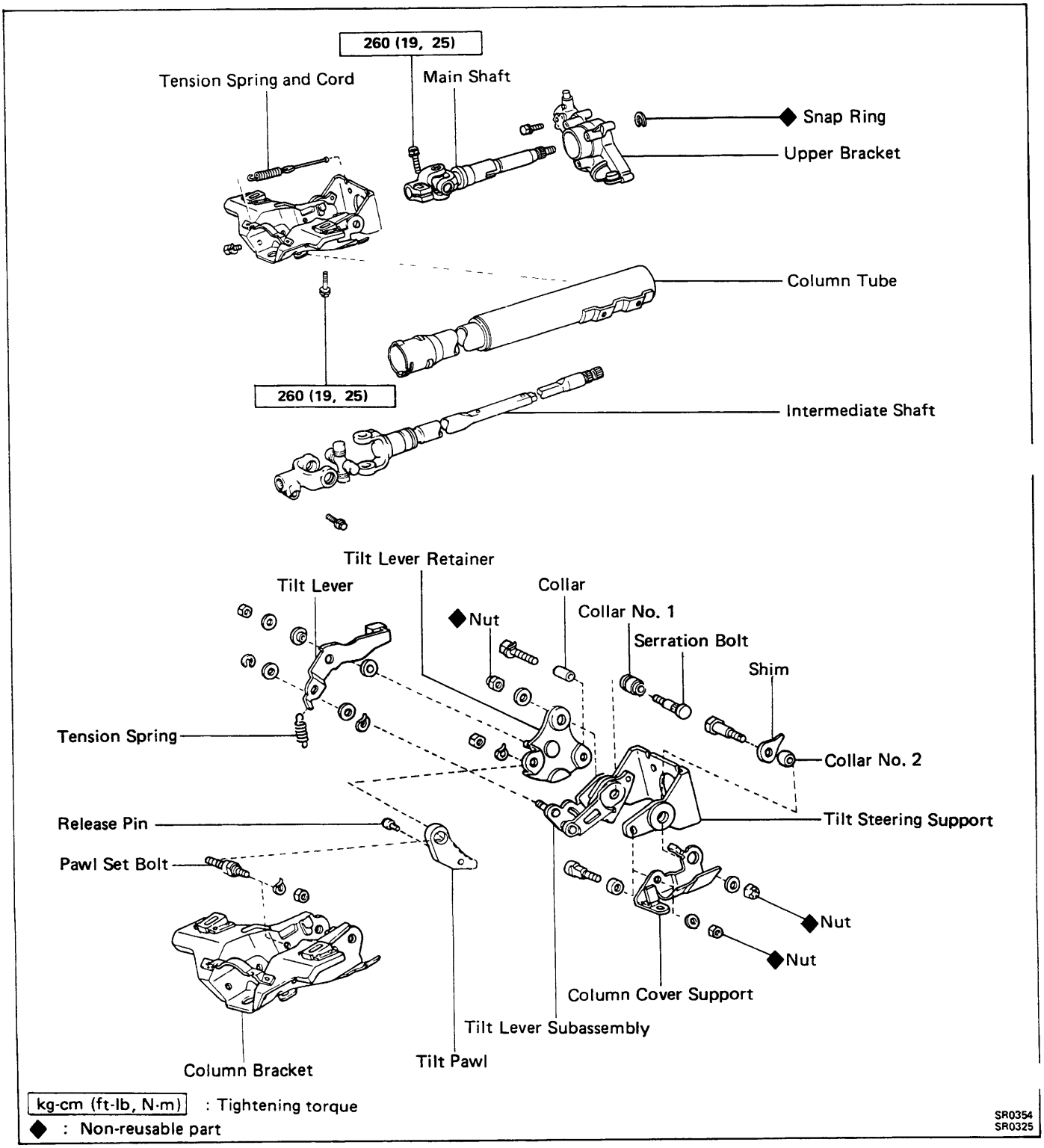

kg-cm (ft-lb, N·m) : Tightening torque

◆ : Non-reusable part

SR0354
SR0325

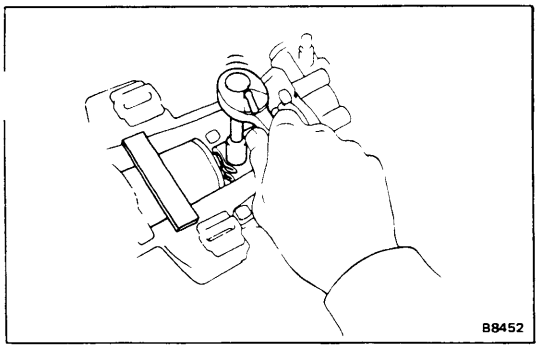

DISASSEMBLY OF STEERING COLUMN ASSEMBY AND TILT MECHANISM

(See page SR-18)

1. DISCONNECT INTERMEDIATE SHAFT FROM MAIN SHAFT

(a) Place matchmarks on the intermediate shaft and universal joint.

(b) Remove the bolt.

(c) Remove the dust seal retainer.

(d) Pull out the intermediate shaft from the main shaft.

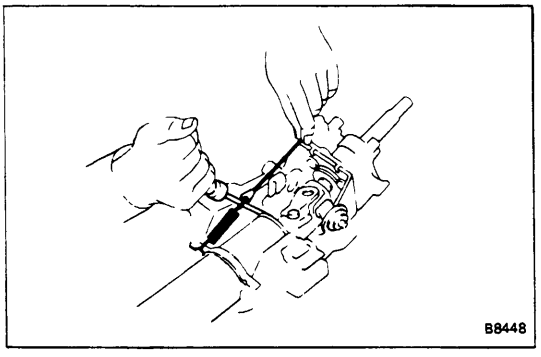

2. REMOVE TENSION SPRINGS AND CORDS

(a) Fully tilt the main shaft upward.

(b) Release the cord from the hook.

(c) Using a screwdriver, pry out the cord tip and remove the spring and cord.

3. REMOVE COLUMN TUBE FROM COLUMN BRACKET

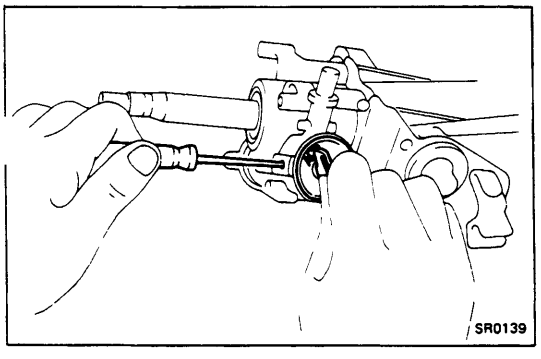

4. REMOVE IGNITION KEY CYLINDER

(a) Place the ignition key at the ACC position.

(b) Push down the stop key with a thin rod, and pull out the key cylinder.

5. REMOVE UPPER BRACKET WITH MAIN SHAFT FROM COLUMN BRACKET

6. REMOVE IGNITION SWITCH

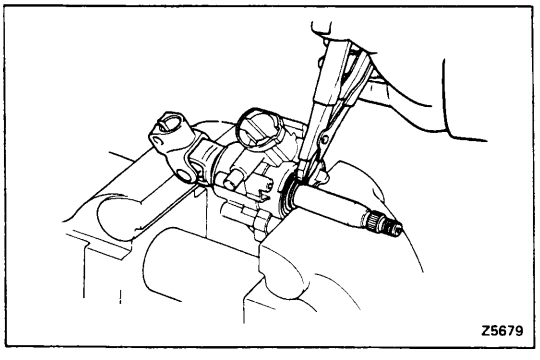

7. REMOVE MAIN SHAFT FROM UPPER BRACKET

(a) Using a soft jaws vise and snap ring pliers, remove the snap ring.

(b) Pull out the main shaft from the bracket.

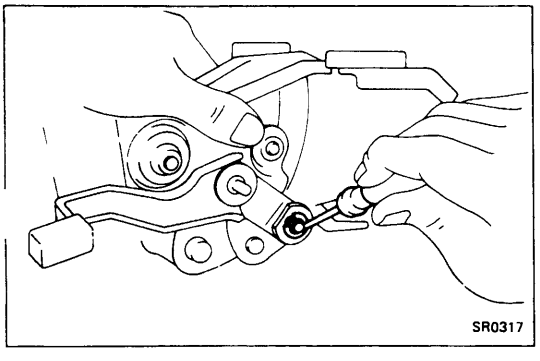

8. REMOVE TILT LEVER

(a) Remove the tension spring.

(b) Remove the E-ring and bushing.

(c) Remove the nut, plate washer and nylon bushing.

(d) Remove the lever, bushing, wave washer and nylon bushing.

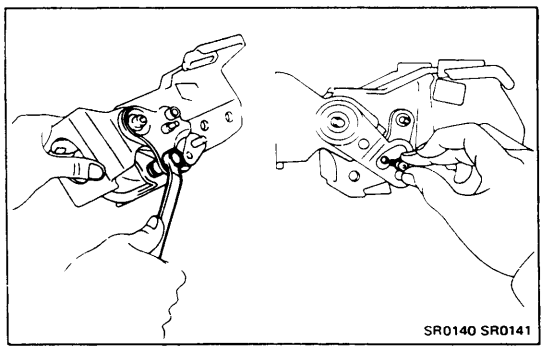

9. REMOVE TILT LEVER RETAINER

(a) Remove the bolt, two nuts and two washers.

(b) Remove the lever retainer and collar.

10. REMOVE RELEASE PIN

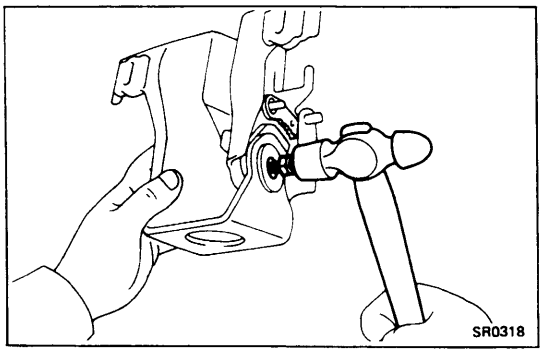

11. REMOVE SERRATION BOLT

Temporarily install another nut flat with the end of the bolt and tap it in with a hammer.

12. REMOVE TILT PAWL

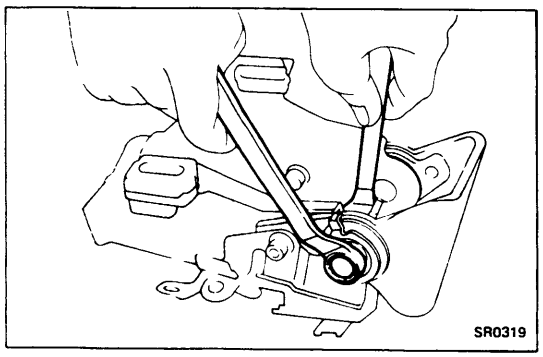

13. REMOVE COLUMN COVER SUPPORT

Remove the following parts:

(a) Nuts

(b) Bolts

(c) Collars

(d) Washers

(e) Shim

14. REMOVE TILT STEERING SUPPORT WITH TILT LEVER SUBASSEMBLY

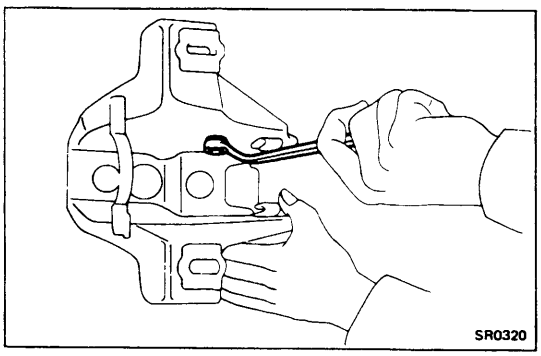

15. REMOVE PAWL SET BOLT

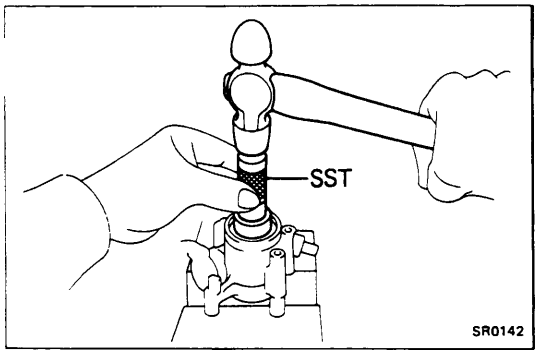

INSPECTION AND REPAIR OF STEERING COLUMN ASSEMBLY

1. IF NECESSARY, REPLACE BEARING IN UPPER BRACKET

(a) Using a hammer and SST, remove the bearing.

SST 09620-30010

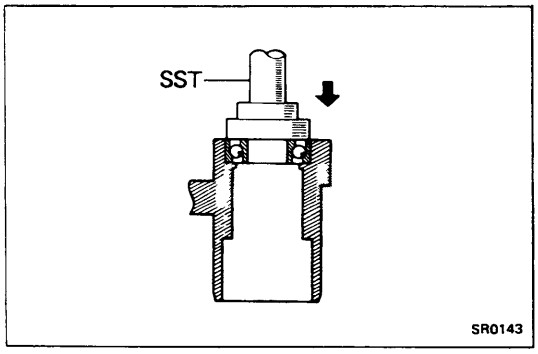

(b) Pack MP grease into the bearing.

(c) Using a hammer and SST, drive the bearing into the bracket.

SST 09620-30010

2. IF NECESSARY, REPLACE LOWER BEARING

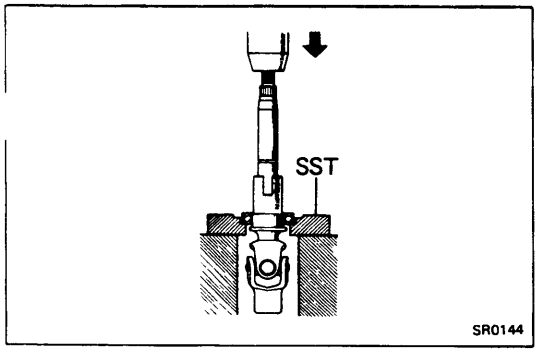

(a) Using a press and SST, remove the lower bearing from the main shaft.

SST 09527-20011

(b) Pack MP grease into the bearing.

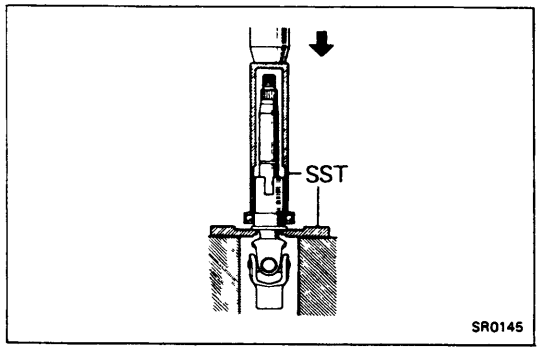

(c) Using a press and SST, assemble the lower bearing and main shaft.

SST 09236-00101 and 09612-22011

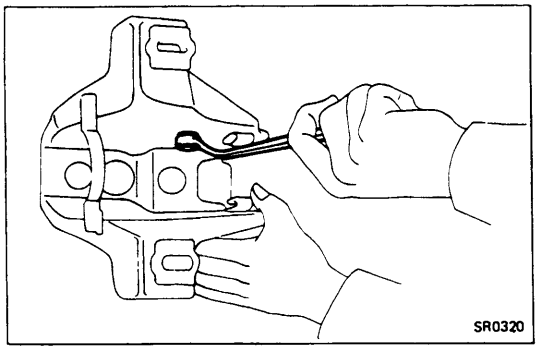
SR0320

ASSEMBLY OF STEERING COLUMN ASSEMBLY AND TILT MECHANISM

(See page SR-18)

1. APPLY MP GREASE TO ALL RUBBING PARTS

2. INSTALL PAWL SET BOLT

Install the bolt and torque the nut.

Torque: 185 kg-cm (13 ft-lb, 18 N·m)

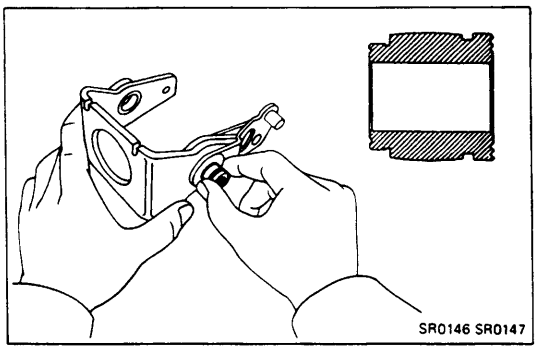
SR0146 SR0147

3. ASSEMBLE TILT LEVER SUBASSEMBLY, COLLAR NO.1 AND NO.2

(a) Select a collar No.1 which will eliminate all play.

Collar No.1 outer diameter

Outer diameter	mm (in.)
17.989 – 17.996	(0.7082 – 0.7085)
17.996 – 18.003	(0.7085 – 0.7088)
18.003 – 18.010	(0.7088 – 0.7091)
18.010 – 18.017	(0.7091 – 0.7093)
18.017 – 18.024	(0.7093 – 0.7096)

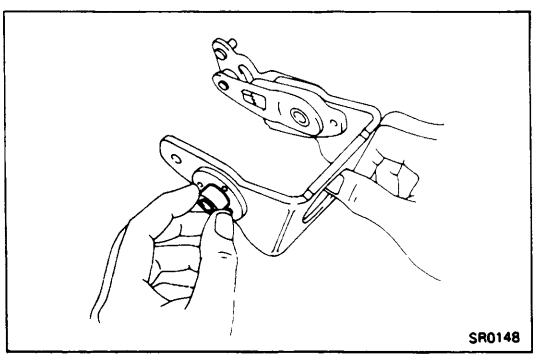
SR0148

(b) Install the tilt lever subassembly and collar No.1 to the support.

(c) Select a collar No.2 which will eliminate all play.

Collar No.2 outer diameter

Outer diameter	mm (in.)
17.982 – 18.000	(0.7080 – 0.7087)
18.000 – 18.018	(0.7087 – 0.7094)

(d) Install collar No.2 to the support.

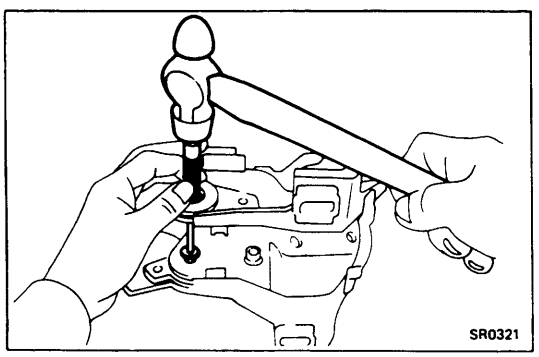
SR0321

4. INSTALL TILT PAWL

5. INSTALL TILT STEERING SUPPORT TO COLUMN BRACKET

Install the tilt steering support to the column bracket and drive in the serration bolt.

6. INSTALL SHIM AND BOLT

(a) Select a shim which fits snugly when pressed in by hand.

Shim thickness

Thickness	mm (in.)
0.2	(0.008)
0.5	(0.020)
0.8	(0.031)
1.4	(0.055)
1.8	(0.071)

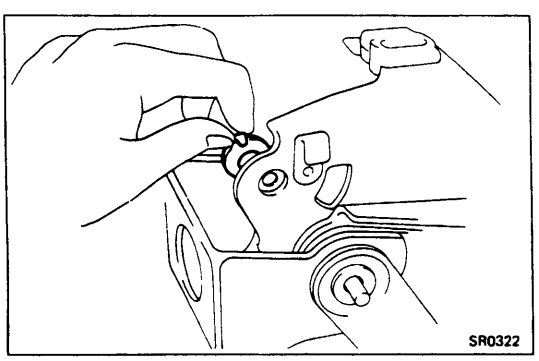
SR0322

(b) Install the shim and bolt.

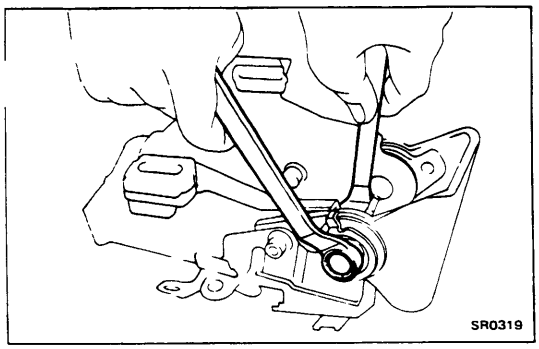

7. INSTALL COLUMN COVER SUPPORT

Install the following parts:

(a) Column cover support

(b) Bolt and collar

(c) Washers and nuts

8. INSTALL RELEASE PIN TO TILT PAWL

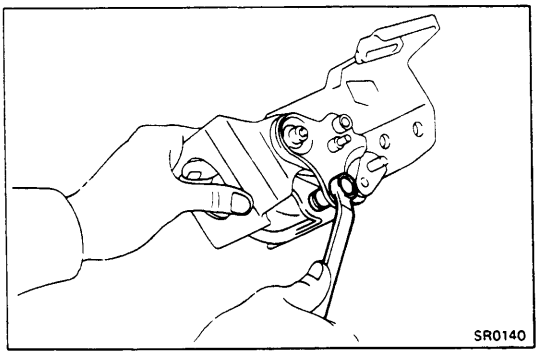

9. INSTALL TILT LEVER RETAINER

(a) Install the collar and lever retainer.

(b) Install the bolt, two nuts and washers.

Torque: 185 kg-cm (13 ft-lb, 18 N·m)

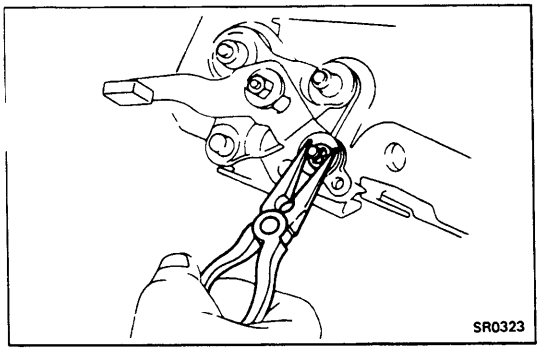

10. INSTALL TILT LEVER

(a) Install the nylon bushing, wave washer, bushing and lever.

(b) Install the nylon bushing, plate washer and nut.

(c) Install the bushing and E-ring.

(d) Install the tension spring.

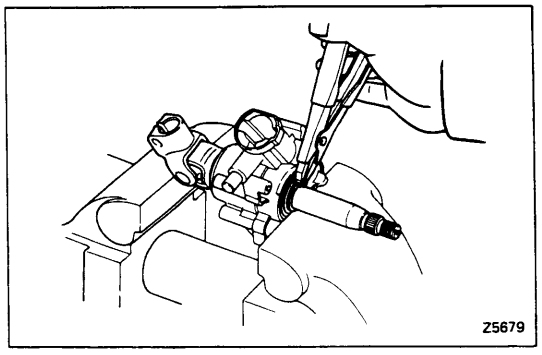

11. INSTALL MAIN SHAFT TO UPPER BRACKET

(a) Insert the main shaft to the upper bracket.

(b) Using a soft-jaw vise and snap ring pliers, install a new snap ring.

12. INSTALL IGNITION SWITCH

13. INSTALL IGNITION KEY CYLINDER

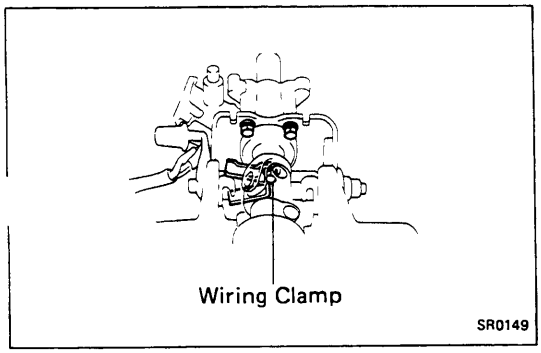

14. INSTALL UPPER BRACKET WITH MAIN SHAFT TO COLUMN BRACKET

(a) Apply anaerobic adhesive and sealant [THREE BOND 1324 (Part No.08833-00070) or equivalent] to 1 or 2 threads of the bolt end.

NOTE: This adhesive will not harden while exposed to air. It will act as a sealer or binding agent only when applied to threads, etc. and air is cut off.

(b) Install the two bolts; one with a wiring clamp.

Torque: 75 kg-cm (65 in.-lb, 7.4 N·m)

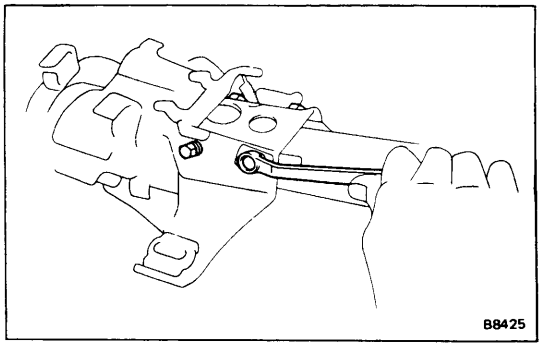

15. INSTALL COLUMN TUBE TO COLUMN BRACKET

Install the four bolts.

Torque: 185 kg-cm (13 ft-lb, 18 N·m)

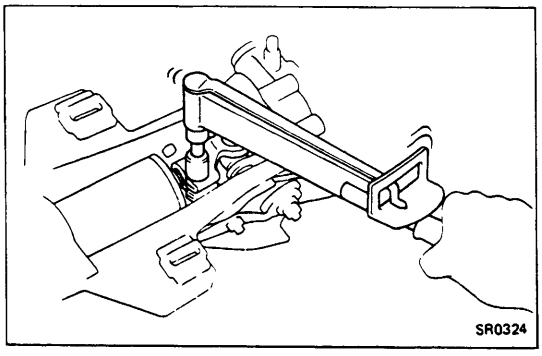

16. CONNECT INTERMEDIATE SHAFT

(a) Align the matchmarks on the universal joint and intermediate shaft.

(b) Torque the bolt.

Torque: 260 kg-cm (19 ft-lb, 25 N·m)

(c) Install the dust cover retainer.

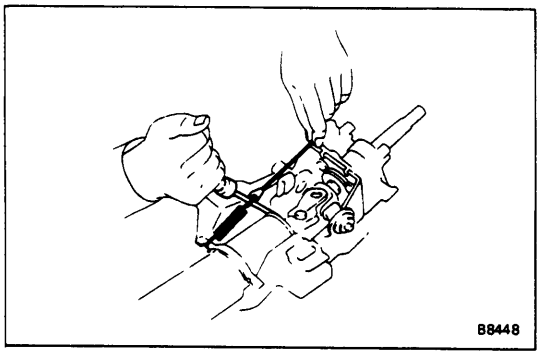

17. INSTALL TENSION SPRINGS AND CORDS

(a) Connect the spring and cord, and hook the spring to the hanger.

(b) Hook the cord end to the tilt steering support.

(c) Hook the cord to the tilt steering support hook.

INSTALLATION OF STEERING COLUMN ASSEMBLY

(See page SR-10 or SR-17)

STEERING GEAR HOUSING (2WD)

REMOVAL OF GEAR HOUSING

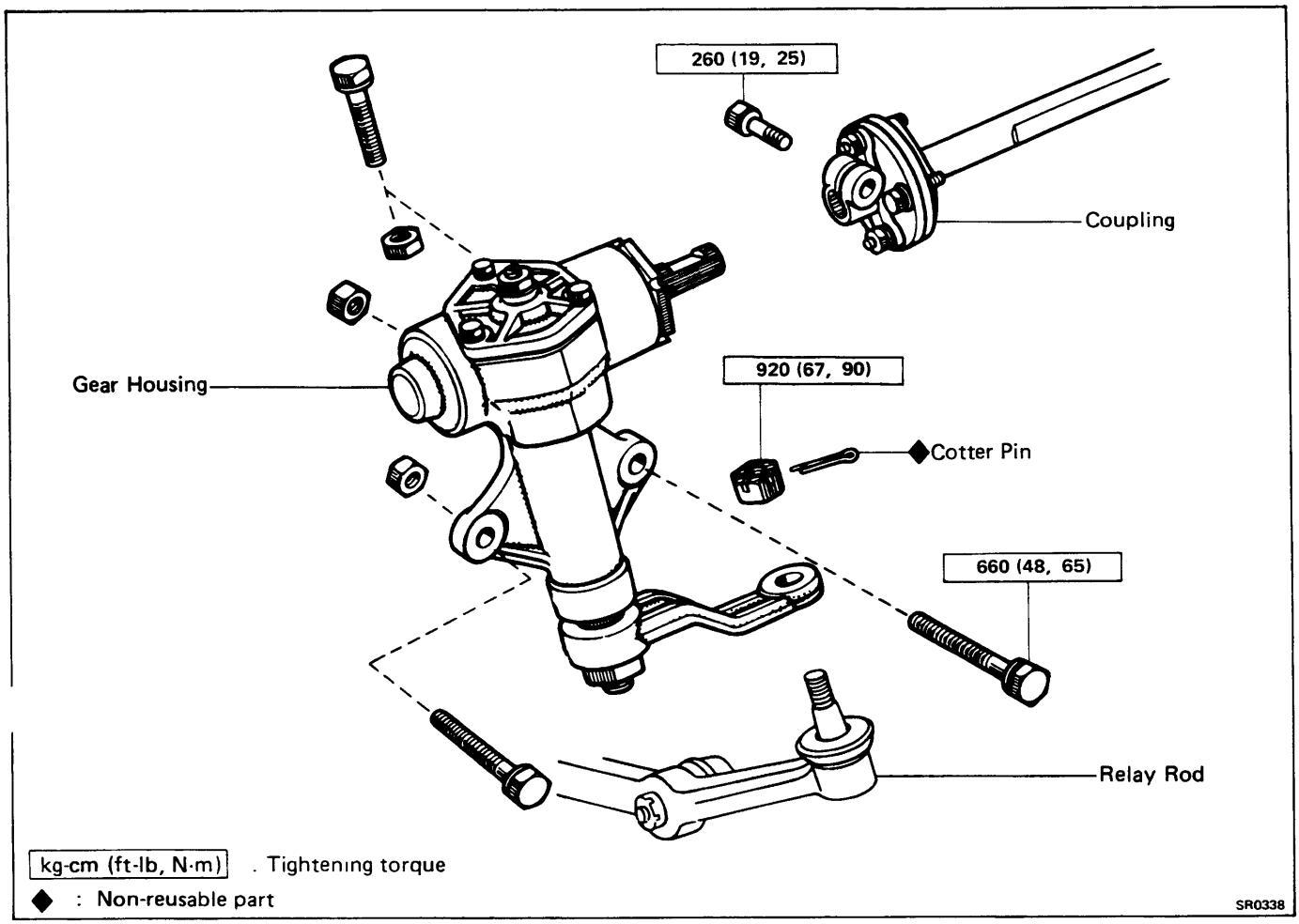

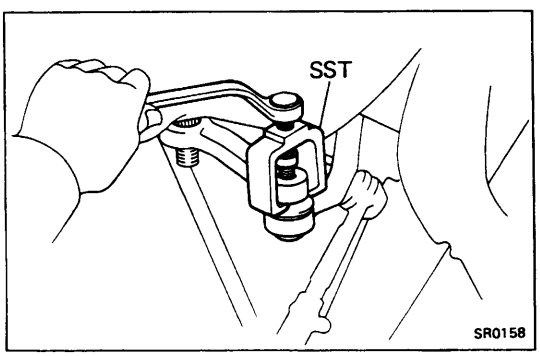

1. **REMOVE COUPLING MOUNT BOLT**

2. **DISCONNECT RELAY ROD FROM PITMAN ARM**
   (a) Loosen the pitman arm mount nut.
   (b) Using SST, disconnect the relay rod from the pitman arm.
   SST 09611-22012

3. **REMOVE GEAR HOUSING**
   Remove the three bolts and the gear housing.

COMPONENTS

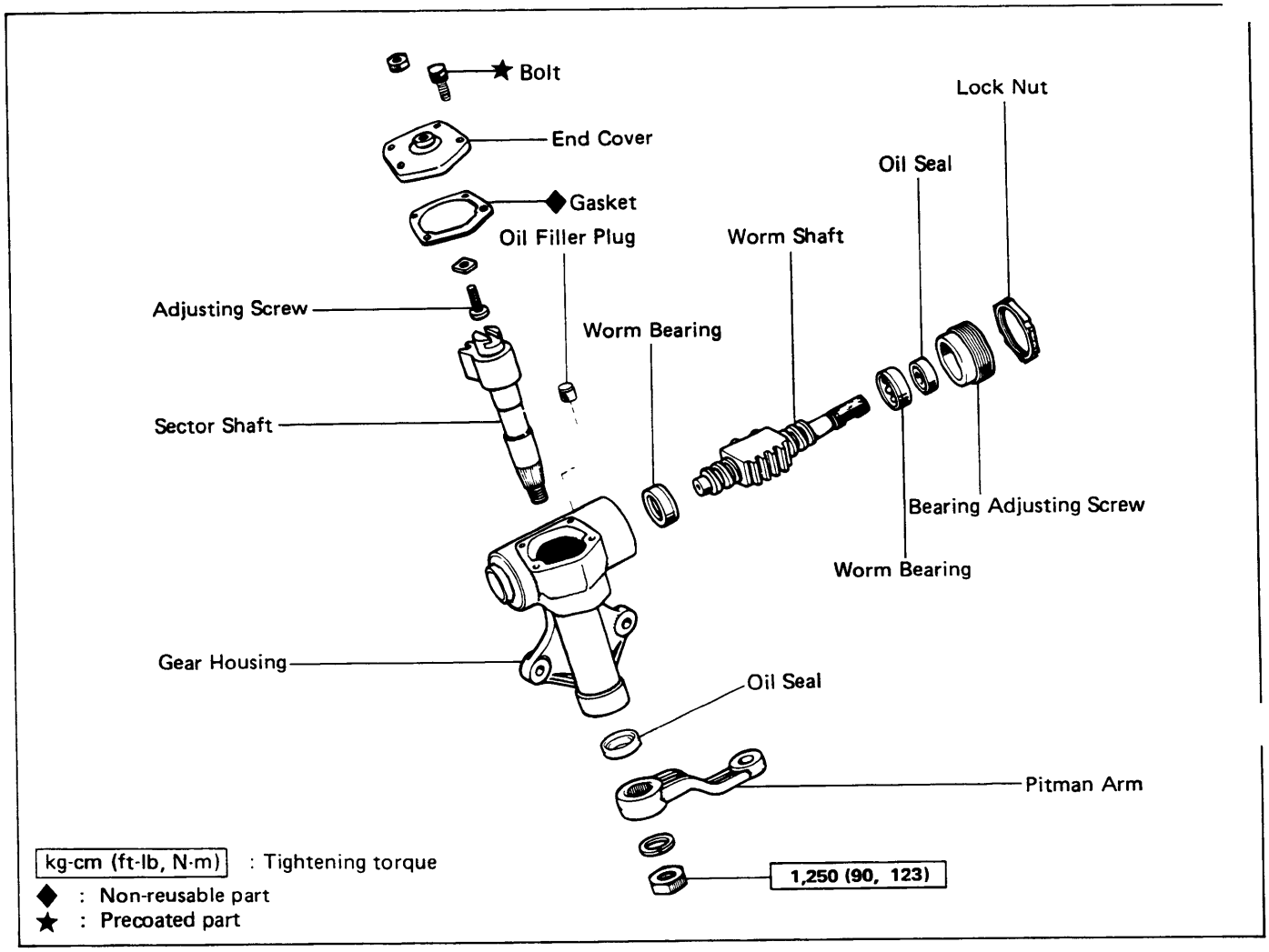

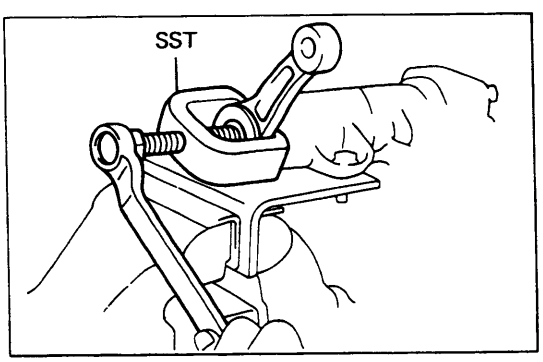

DISASSEMBLY OF STEERING GEAR HOUSING

1. REMOVE OIL FILLER PLUG AND DRAIN GEAR OIL

2. REMOVE PITMAN ARM

Using SST, pull the pitman arm off the sector shaft.
SST 09610-55012

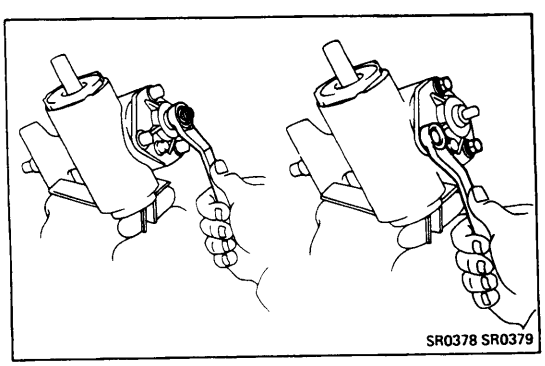

3. REMOVE END COVER AND SECTOR SHAFT

(a) Remove the adjusting screw lock nut and four bolts.

(b) Remove the end cover by turning the adjusting screw clockwise.

(c) Pull out the sector shaft and adjusting screw from the gear housing.

(d) Remove the needle rollers.

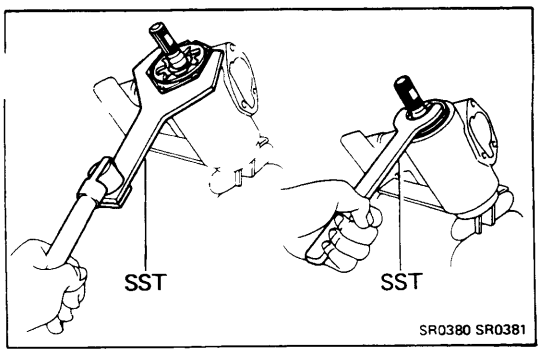

4. REMOVE LOCK NUT

Using SST, remove the lock nut.

SST 09617-30040

5. REMOVE BEARING ADJUSTING SCREW

Using SST, remove the adjusting screw.

SST 09616-22010

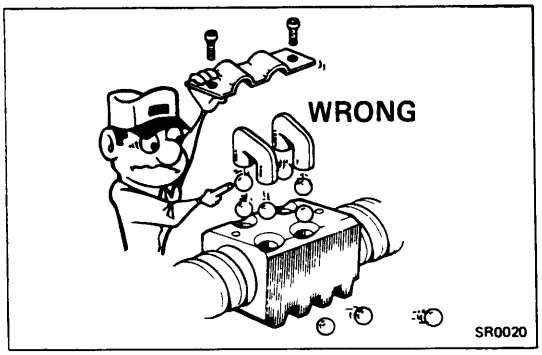

6. REMOVE WORM SHAFT

Pull the worm shaft out of the gear housing.

CAUTION: Do not disassemble the ball nut from the steering worm shaft.

INSPECTION AND REPAIR OF STEERING GEAR HOUSING

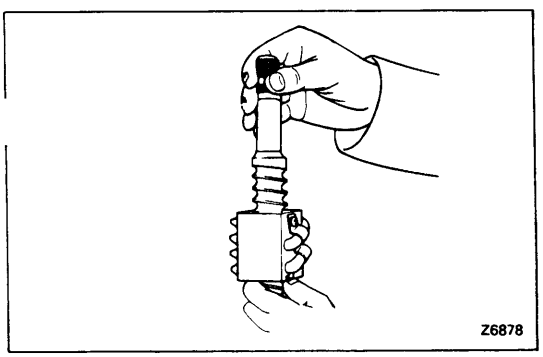

1. INSPECT WORM AND BALL NUT

(a) Check the worm and ball nut for wear or damage.

(b) Check that the nut rotates smoothly down the shaft by its own weight.

If a problem is found, repair or replace the worm.

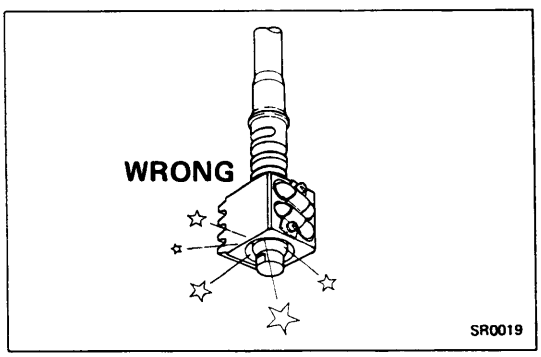

CAUTION: Do not allow the ball nut to hit the end of the worm shaft.

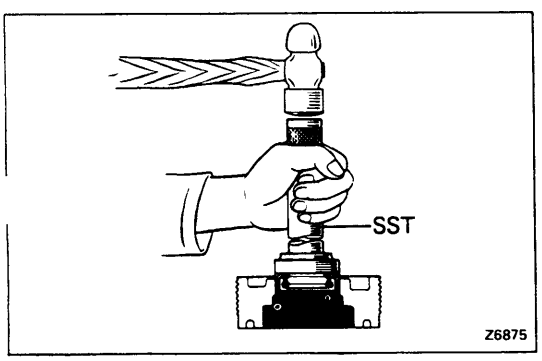

2. INSPECT WORM BEARINGS AND OIL SEAL

Check for wear or damage.

If a problem is found, replace the bearings, bearing races and oil seal.

3. IF NECESSARY, REPLACE OIL SEAL

(a) Remove the oil seal with a screwdriver.

(b) Using SST, install a new oil seal.

SST 09620-30010

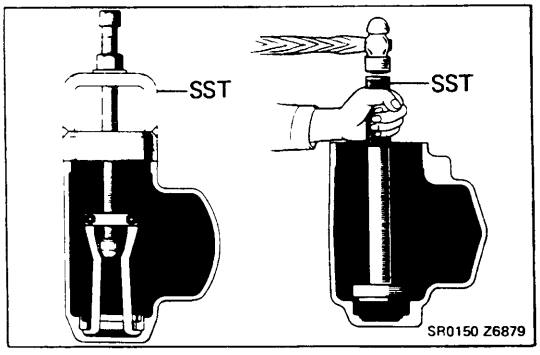

4. IF NECESSARY, REPLACE OUTER RACE IN GEAR HOUSING

(a) Using SST, remove the outer race from the housing.

SST 09612-65013

(b) Using SST, install the outer race into the housing.

SST 09620-30010

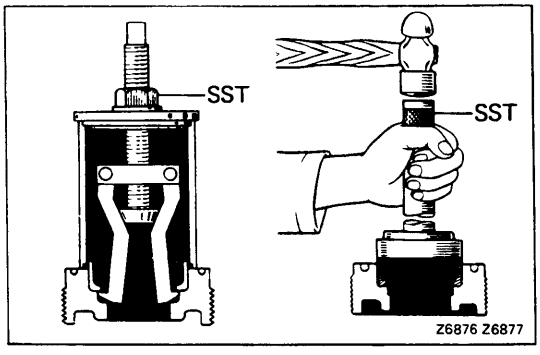

5. IF NECESSARY, REPLACE OUTER RACE IN ADJUSTING NUT

(a) Remove the oil seal with a screwdriver.

(b) Using SST, remove the outer race from the nut.

SST 09612-30012

(c) Using SST, install the race into the nut.

SST 09620-30010

(d) Using SST, install the oil seal into the nut.

SST 09620-30010

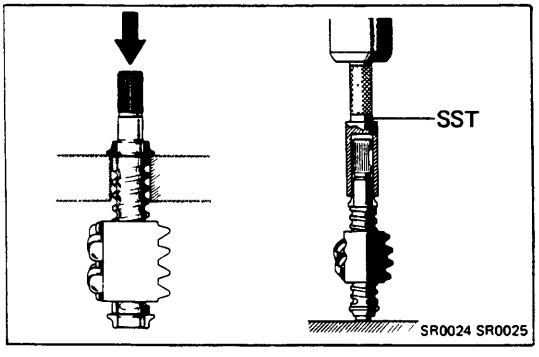

6. IF NECESSARY, REPLACE INNER RACE ON WORM SHAFT

(a) Using a press, remove the inner races from the shaft.

(b) Using SST, press the inner races into the shaft.

SST 09620-30010

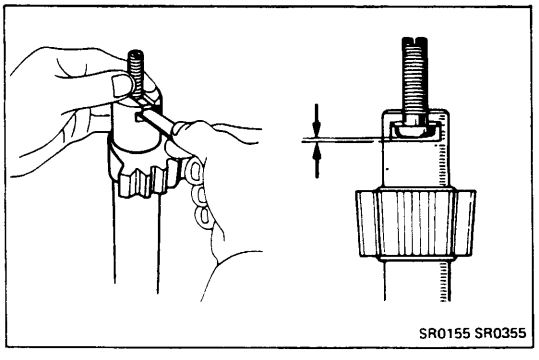

7. INSPECT SECTOR SHAFT

Measure shaft thrust clearance with a feeler gauge.

Maximum clearance: Less than 0.05 mm (0.0020 in.)

If necessary, install a new thrust washer which will provide the minimum clearance between the sector shaft and the adjusting screw.

Thrust washer thickness

Thickness mm (in.)		Thickness mm (in.)	
2.00	(0.0787)	2.12	(0.0835)
2.04	(0.0803)	2.16	(0.0850)
2.08	(0.0819)	2.20	(0.0866)

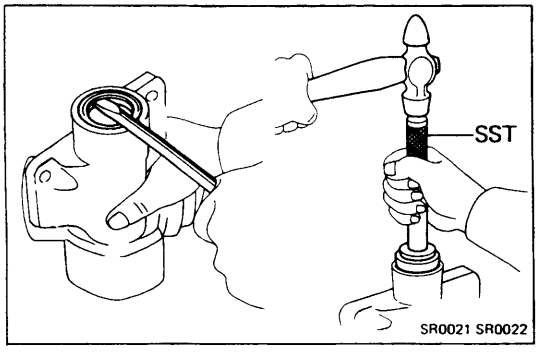

8. IF NECESSARY, REPLACE OIL SEAL

(a) Remove the oil seal with a screwdriver from the gear housing.

(b) Using SST and hammer, install a new oil seal.

SST 09620-30010

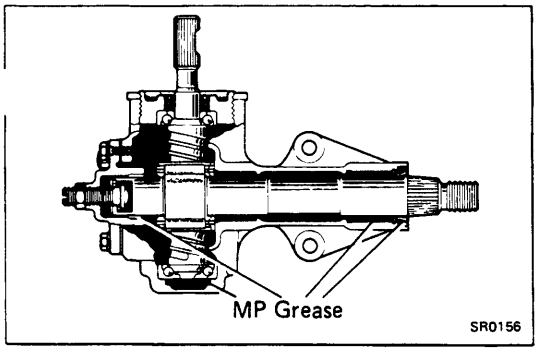

ASSEMBLY OF STEERING GEAR HOUSING

(See page SR-26)

1. **APPLY MP GREASE TO BUSHING,NEEDLE ROLLER BEARINGS AND OIL SEALS**

2. **INSERT WORM SHAFT INTO GEAR HOUSING**

   Place the worm bearings on the shaft and insert the shaft into the housing.

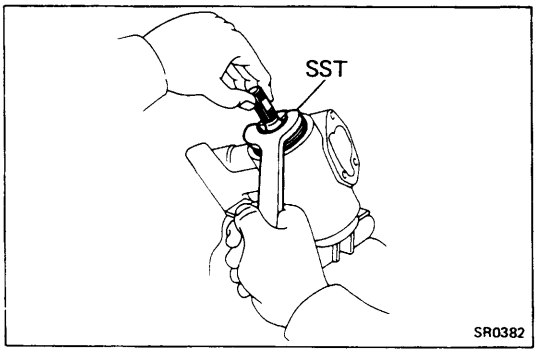

3. **INSTALL AND ADJUST BEARING ADJUSTING SCREW**

   (a) Using SST, gradually tighten the adjusting screw until it is snug.

   SST 09616-22010

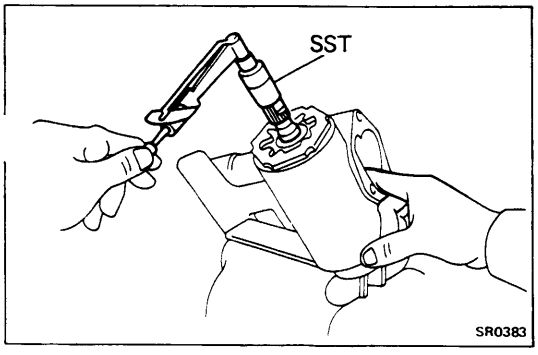

   (b) Using a torque wrench and SST, measure the bearing preload in both directions. Turn the adjusting screw until the preload is correct.

   Preload (starting): 3 — 4 kg-cm (2.6 — 3.5 in.-lb, 0.3 — 0.4 N·m)

   SST 09616-00010

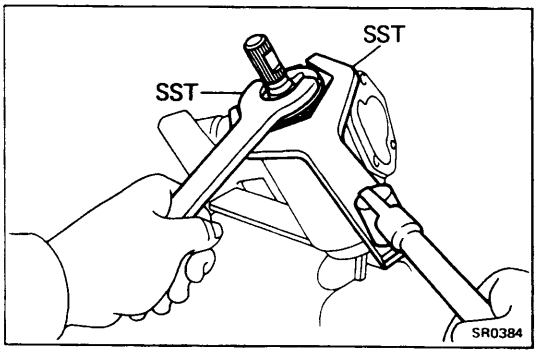

   (c) Hold the adjusting screw in position with SST and tighten the lock nut with SST.

   Torque: 1,500 kg-cm (108 ft-lb, 147 N·m)

   SST 09616-22010 and 09617-30040

   NOTE: Check that the bearing preload is still correct.

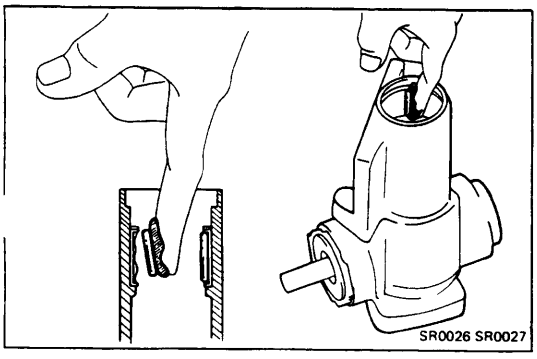

4. **INSTALL NEEDLE ROLLER BEARING**

   Apply MP grease to the needle rollers and install them into the housing.

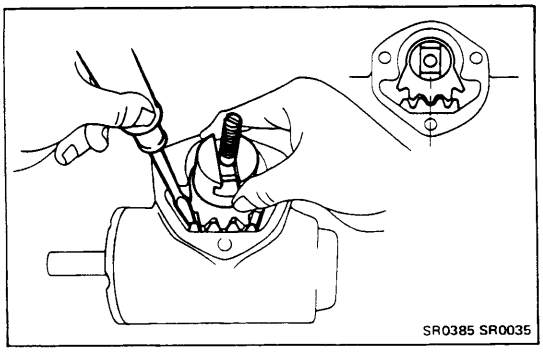

5. INSTALL SECTOR SHAFT

(a) Install the adjusting screw and thrust washer onto the sector shaft.

(b) Set the ball nut at the center of the worm shaft. Insert the sector shaft into the gear housing so that the center teeth mesh together.

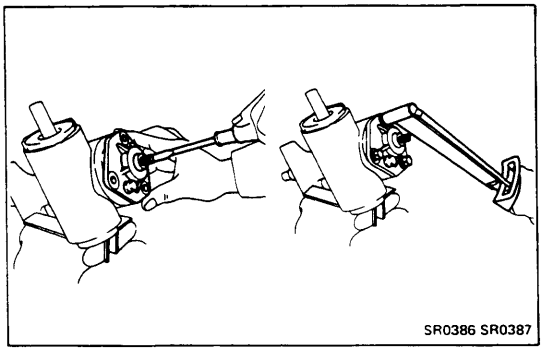

6. INSTALL END COVER

(a) Apply liquid sealer to the gasket and end cover.

(b) Install the end cover over the gasket.

(c) Loosen the adjusting screw as far as possible.

(d) Torque the four cover bolts.

Torque: 185 kg-cm (13 ft-lb, 18 N·m)

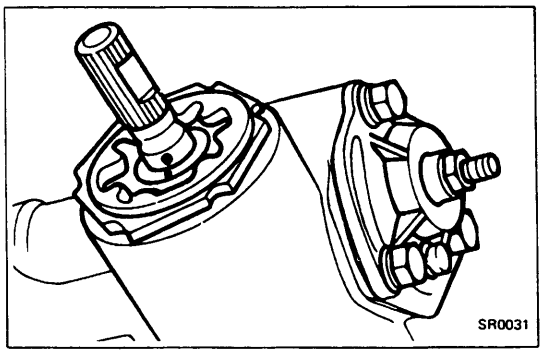

7. PLACE WORM SHAFT IN NEUTRAL POSITION

(a) Count the total shaft rotations and turn the shaft back half of that number.

(b) The worm shaft is now in neutral position.

(c) Place matchmarks on the worm shaft and housing to show neutral position.

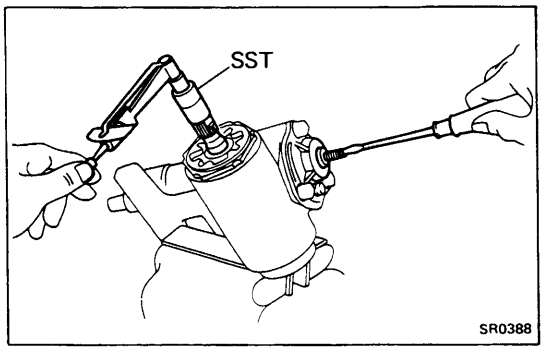

8. ADJUST TOTAL PRELOAD

Using a torque wrench and SST, turn the adjusting screw while measuring the preload until it is correct.

NOTE: Be sure that the worm shaft is in neutral position.

Preload (starting): 8.0 — 10.5 kg-cm (6.9 — 9.1 in.-lb, 0.8 — 1.0 N·m)

SST 09616-00010

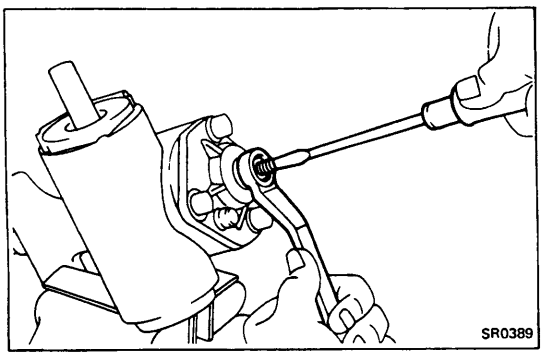

9. TIGHTEN ADJUSTING SCREW LOCK NUT

(a) Apply liquid sealer to the lock nut.

(b) Hold the screw with a screwdriver while tightening the lock nut.

(c) Torque the lock nut.

Torque: 250 kg-cm (18 ft-lb, 25 N·m)

NOTE: Check that the preload is still correct.

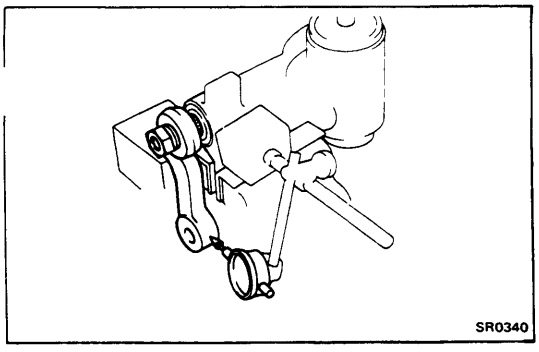
SR0340

10. INSTALL PITMAN ARM

Align the marks on the sector shaft with the pitman arm. Install the pitman arm and tighten the nut finger tight.

11. MEASURE SECTOR SHAFT BACKLASH

Install a backlash gauge. Check that the sector shaft has no backlash within 100 degrees of the left and right sides from neutral position.

12. REPLENISH WITH GEAR OIL

Oil type: API GL-4, SAE 90

Capacity: 380 — 400 cc (23.2 — 24.4 cu in.)

13. INSTALL OIL FILLER PLUG

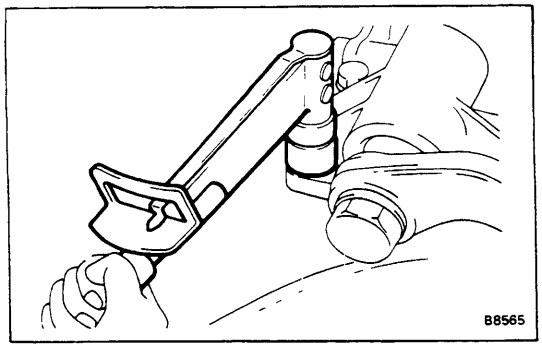

INSTALLATION OF GEAR HOUSING

(See page SR-25)

1. INSTALL GEAR HOUSING

(a) Line up the marks on the coupling and worm shaft.

(b) Torque the three mount bolts.

Torque: 660 kg-cm (48 ft-lb, 65 N·m)

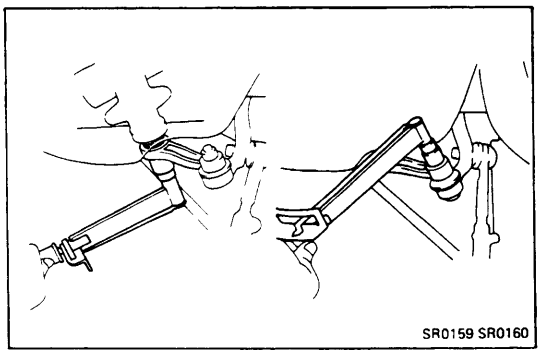

2. TORQUE PITMAN ARM MOUNT NUT

Torque: 1,250 kg-cm (90 ft-lb, 123 N·m)

3. CONNECT PITMAN ARM TO RELAY ROD

Connect the pitman arm to the relay rod and torque the mount nut.

Torque: 920 kg-cm (67 ft-lb, 90 N·m)

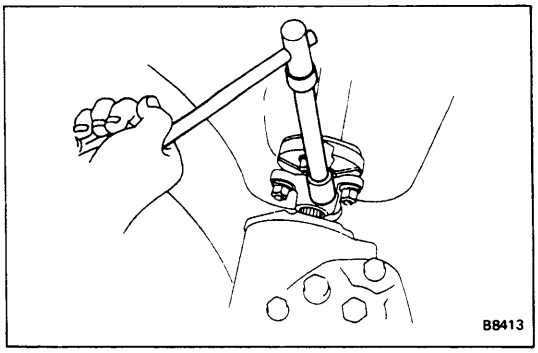

4. TORQUE COUPLING MOUNT BOLT

Torque: 260 kg-cm (19 ft-lb, 25 N·m)

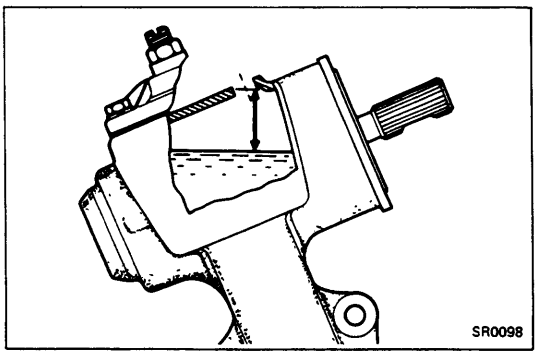

5. FILL GEAR HOUSING WITH GEAR OIL

Oil type: API GL-4, SAE 90
Oil level: 18 — 28 mm (0.71 — 1.10 in.) from top
Capacity: 380 — 400 cc (23.2 — 24.4 cu in.)

STEERING GEAR HOUSING (4WD)

REMOVAL OF GEAR HOUSING

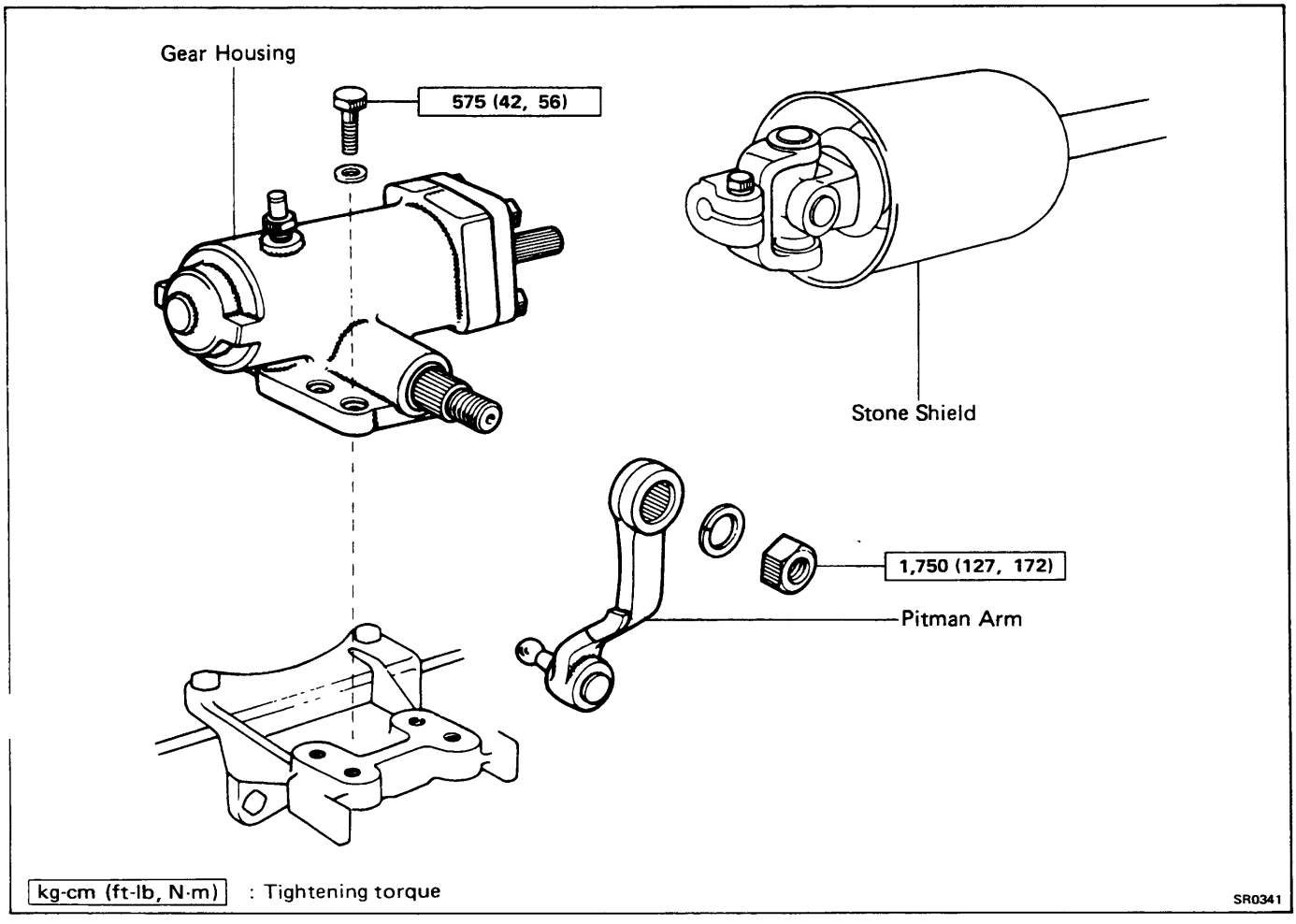

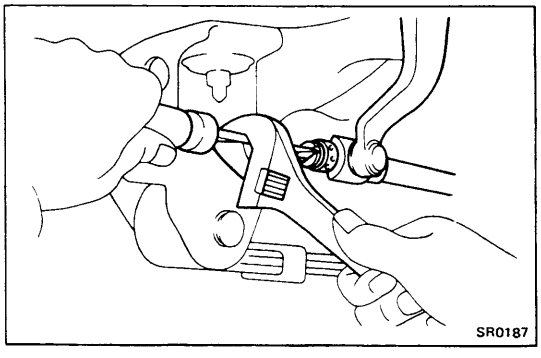

1. **DISCONNECT JOINT YOKE FROM WORM SHAFT**
   (a) Remove the stone shield from the gear housing.
   (b) Place matchmarks on the worm shaft and joint yoke.
   (c) Remove the joint yoke mount bolt.

2. **DISCONNECT DRAG LINK FROM PITMAN ARM**
   (a) Remove the cotter pin and plug from the drag link.
   (b) Disconnect the drag link from the pitman arm.

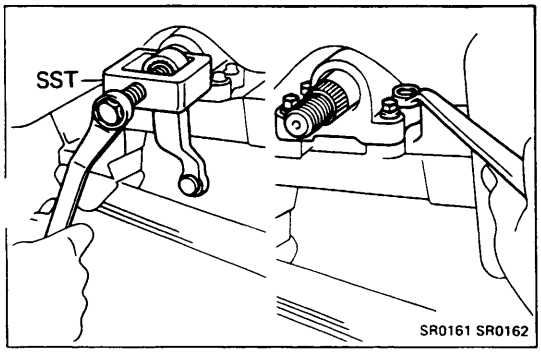

3. **REMOVE PITMAN ARM**
   (a) Loosen the pitman arm mount nut.
   (b) Using SST,disconnect the pitman arm from the gear housing.

   SST 09610-55012

4. **REMOVE GEAR HOUSING**
   Remove the four bolts and the gear housing.

COMPONENTS

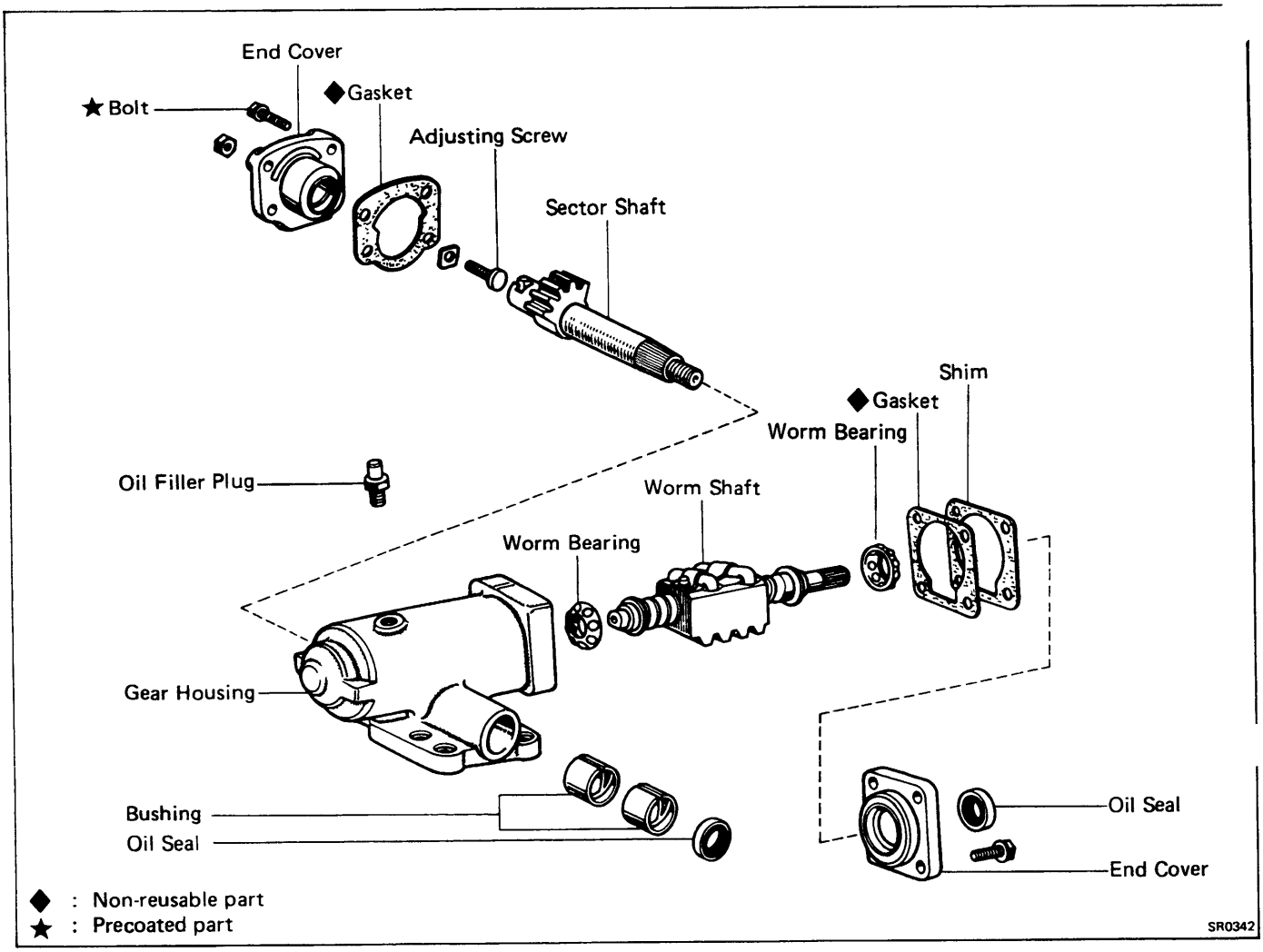

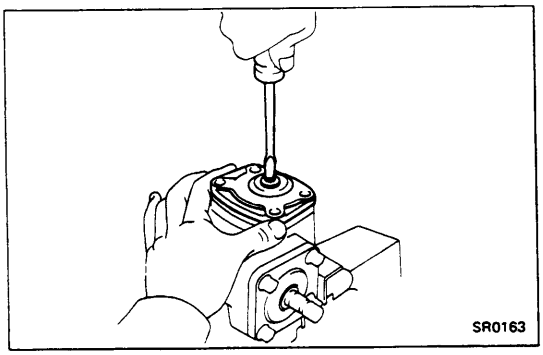

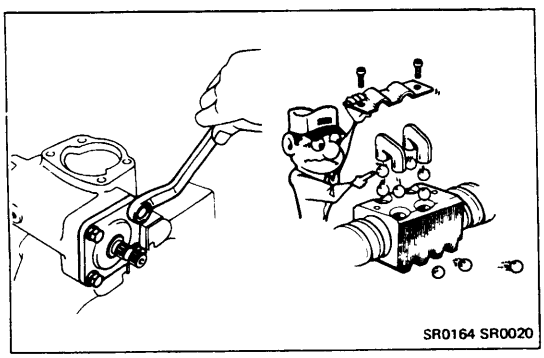

DISASSEMBLY OF STEERING GEAR HOUSING

1. **REMOVE OIL FILLER PLUG AND DRAIN GEAR HOUSING OIL**

2. **REMOVE END COVER AND SECTOR SHAFT**
   (a) Remove the adjusting screw lock nut and four bolts.
   (b) Remove the end cover by turning the adjusting screw clockwise.
   (c) Pull the sector shaft from the housing.

3. **REMOVE END COVER AND WORM SHAFT**
   (a) Remove the end cover and shims.
   (b) Remove the worm shaft and the two bearings.

CAUTION: Do not disassemble the ball nut from the steering worm shaft.

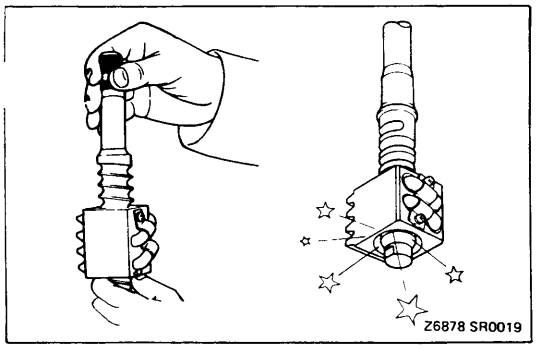

INSPECTION AND REPAIR OF STEERING GEAR HOUSING

1. INSPECT WORM AND BALL NUT

(a) Check worm and ball nut for wear or damage.

(b) Check that the nut rotates smoothly down the shaft by its own weight.

CAUTION: Do not allow the ball nut to hit the end of the worm shaft.

If a problem is found, repair or replace the worm.

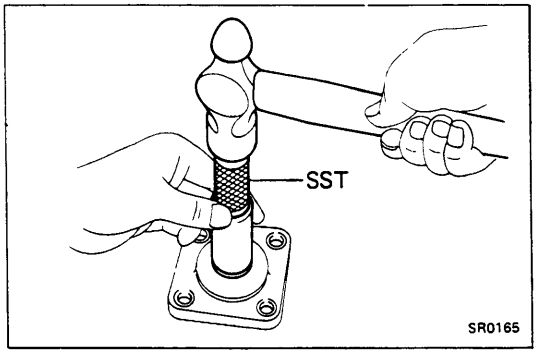

2. INSPECT WORM BEARING AND OIL SEAL

Check for wear or damage.

If a problem is found, replace the bearings, bearing races and oil seal.

3. IF NECESSARY, REPLACE OIL SEAL IN END COVER

(a) Remove the oil seal with a screwdriver.

(b) Using SST, install the new oil seal.

SST 09620-30010

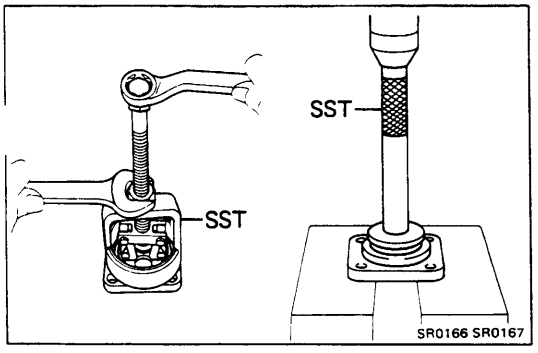

4. IF NECESSARY, REPLACE OUTER RACE IN END COVER

(a) Using SST, remove the outer race from the end cover.

SST 09612-65013

(b) Using SST, install the outer race in the end cover.

SST 09608-35013

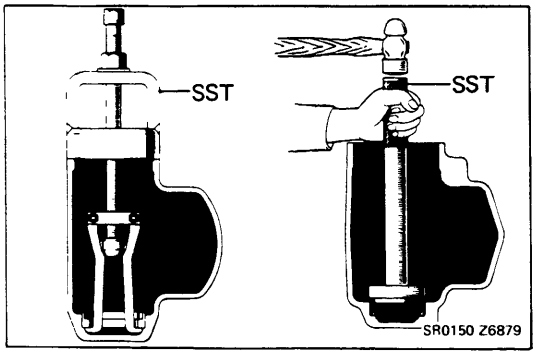

5. IF NECESSARY, REPLACE OUTER RACE IN GEAR HOUSING

(a) Using SST, remove the outer race from the housing.

SST 09612-65013

(b) Using SST, install the outer race into the housing.

SST 09608-35013

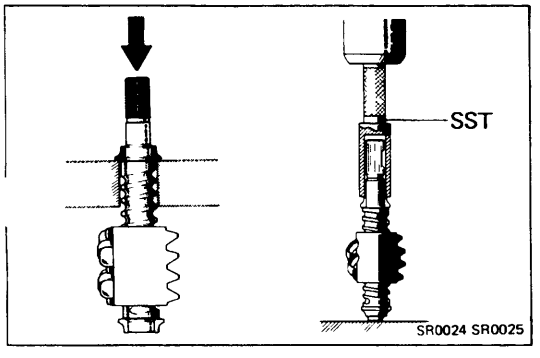

6. IF NECESSARY, REPLACE INNER RACE ON WORM SHAFT

(a) Using a press, remove the inner races from the shaft.

(b) Using SST, press the inner races into the shaft.

SST 09620-30010

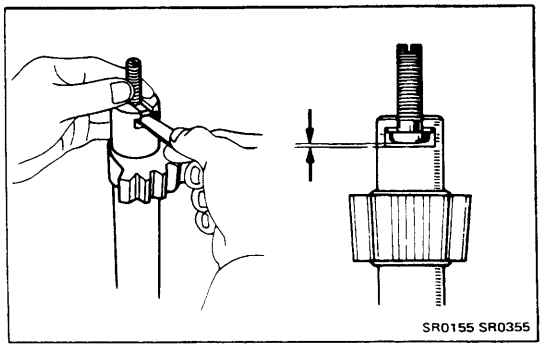
SR0155 SR0355

7. INSPECT SECTOR SHAFT

(a) Measure that thrust clearance with a feeler gauge.

Maximum clearance: 0.05 mm (0.0020 in.)

If necessary, install a new thrust washer to provide the minimum clearance between the sector shaft and the adjusting screw.

Thrust washer thickness

Thickness	mm (in.)	Thickness	mm (in.)
2.00	(0.0787)	2.15	(0.0846)
2.05	(0.0807)	2.20	(0.0866)
2.10	(0.0827)		

(b) Check the shaft,thrust washer and adjusting screw for wear or damage.

(c) Measure the shaft outer diameter.

Outer diameter:

Standard 31.970 — 31.992 mm (1.2587 — 1.2595 in.)

Minimum 31.95 mm (1.2579 in.)

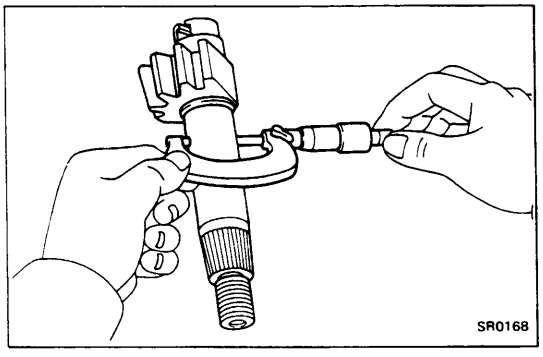
SR0168

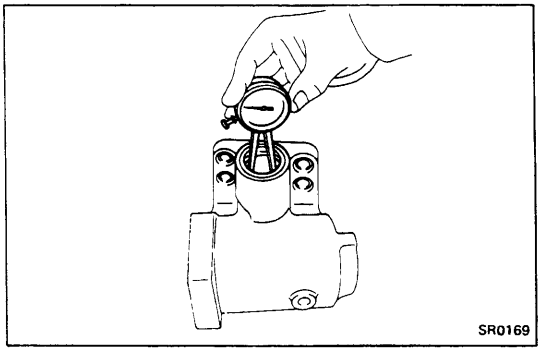
SR0169

8. INSPECT GEAR HOUSING BUSHINGS

(a) Check the bushings for wear or damage.

(b) Using calipers, measure the sector shaft oil clearance.

Oil clearance:

Standard 0.01 — 0.06 mm (0.0004 — 0.0024 in.)

Maximum 0.10 mm (0.0039 in.)

If necessary, replace the bushings.

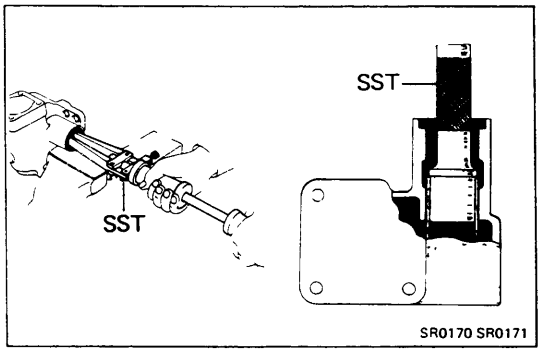

SR0170 SR0171

9. IF NECESSARY, REPLACE BUSHING AND OIL SEAL

(a) Using SST, remove the oil seal.

SST 09308-00010

(b) Using SST and press, remove the two bushings together in the same direction.

SST 09307-12010

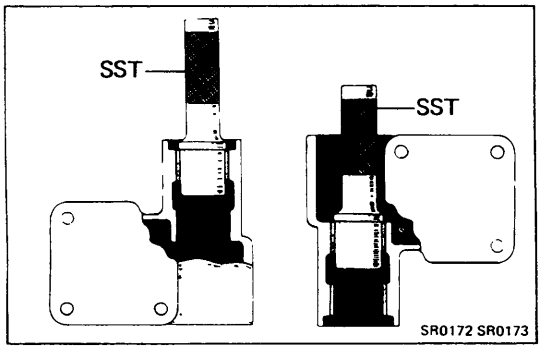

SR0172 SR0173

(c) Using SST and press, install the outer bushing to the gear housing.

SST 09307-12010

(d) Install the inner bushing by the same procedure.

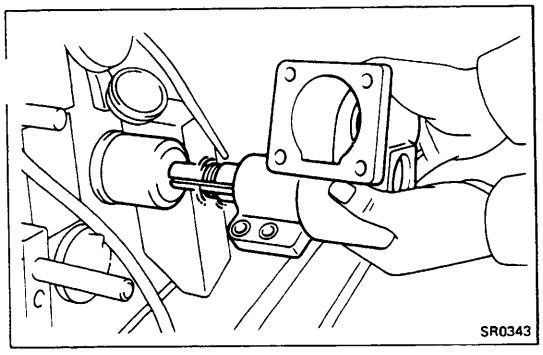

(e) Hone the inner surface of the bushings until standard oil clearance is obtained between the bushings and sector shaft.

Standard oil clearance:
0.01 — 0.06 mm (0.0004 — 0.0024 in.)

(f) Install a new oil seal to the gear housing.

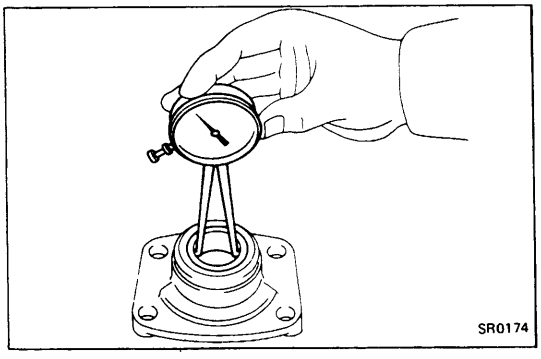

10. INSPECT END COVER BUSHING

(a) Check the bushing for wear or damage.

(b) Using calipers, measure the sector shaft oil clearance.

Oil clearance:

Standard	**0.009 — 0.060 mm (0.0004 — 0.0024 in.)**
Maximum	**0.10 mm (0.0039 in.)**

If the oil clearance is excessive or damage is found, the end cover must be replaced.

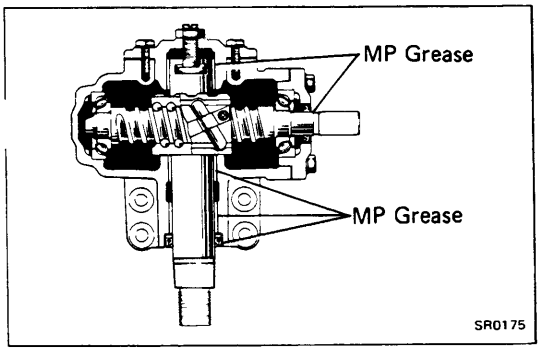

ASSEMBLY OF STEERING GEAR HOUSING

(See page SR-34)

1. APPLY MP GREASE TO BUSHINGS AND OIL SEAL

2. INSERT WORM SHAFT INTO GEAR HOUSING

Place worm bearings on the shaft and insert the shaft into the housing.

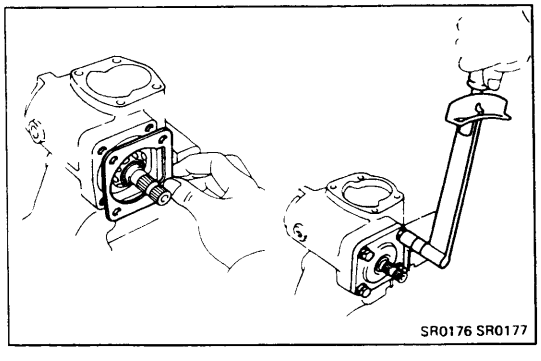

3. INSTALL SHIMS AND END COVER, AND ADJUST WORM BEARING PRELOAD

(a) Install the same number of shims as there was before disassembly.

(b) Install the end cover and torque the four bolts.

Torque: 400 kg-cm (29 ft-lb, 39 N·m)

NOTE: While tightening the bolts, check the worm shaft to see that it turns properly.

(c) Using a torque wrench and SST, measure the bearing preload.

SST 09616-00010

Preload (starting): 3.5 — 6.5 kg-cm (3.0 — 5.6 in.-lb, 0.3 — 0.6 N·m)

If the preload is not within limit, correct by selecting shims of proper thickness.

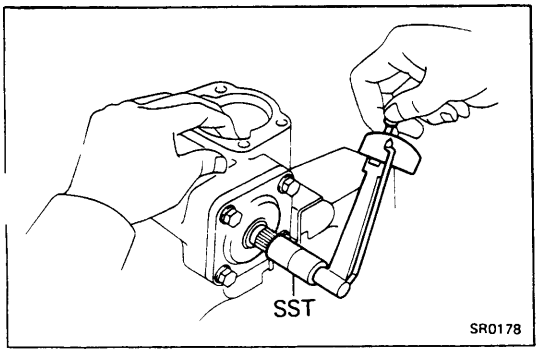

Shim thickness

Thickness mm (in.)		Thickness mm (in.)	
0.05	(0.0020)	0.09	(0.0035)
0.06	(0.0024)	0.10	(0.0039)
0.07	(0.0028)	0.20	(0.0079)
0.08	(0.0031)	0.50	(0.0197)

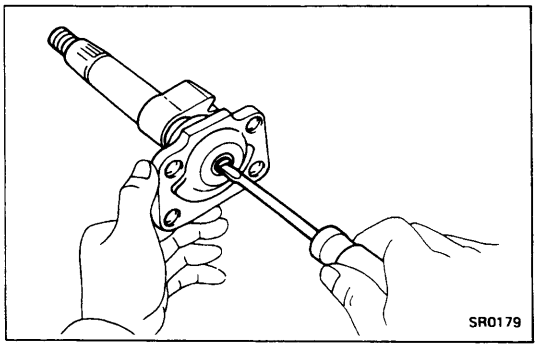

4. INSTALL SECTOR SHAFT AND END COVER

(a) Apply liquid sealer to the adjusting screw threads and insert it in the thrust washer.

(b) Assemble the sector shaft and adjusting screw to the end cover.

NOTE: Fully loosen the adjusting screw.

(c) Apply liquid sealer to the gear housing.

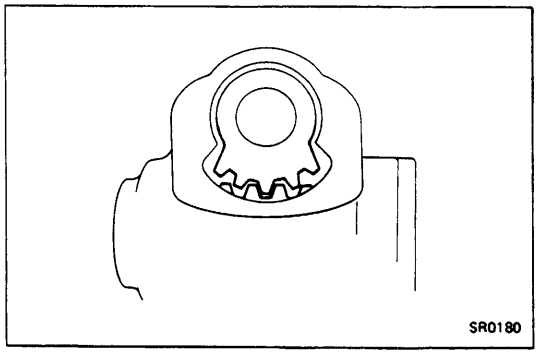

(d) Set and support the ball nut at the center of the gear housing by inserting a screwdriver into the breather plug hole.

(e) Insert the sector shaft into the gear housing so that the center teeth mesh together.

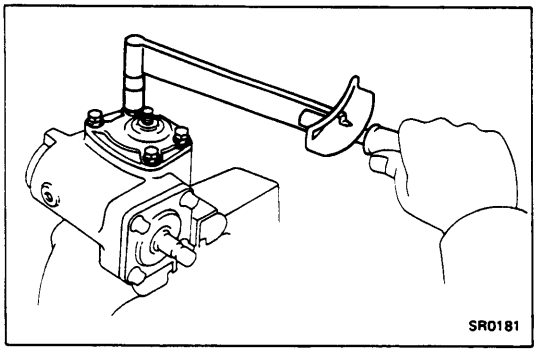

(f) Torque the four bolts.

Torque: 400 kg-cm (29 ft-lb, 39 N·m)

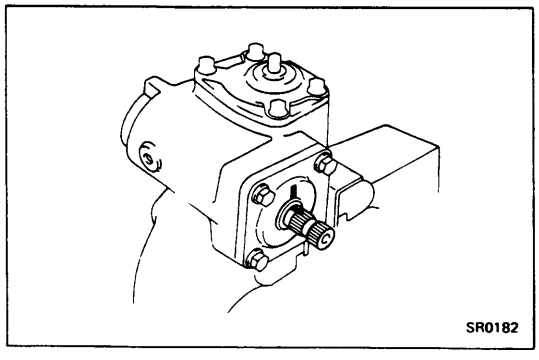

5. PLACE WORM SHAFT IN NEUTRAL POSITION

(a) Count the total shaft rotations and turn the shaft back half of that number.

(b) The worm shaft is now in neutral position.

(c) Place matchmarks on the worm shaft and housing to show neutral position.

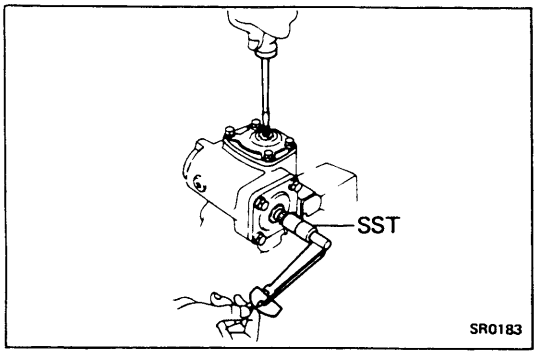

6. ADJUST TOTAL PRELOAD

Using a torque wrench and SST, turn the adjusting screw while measuring the preload until it is correct.

NOTE: Be sure that the worm shaft is in neutral position.

Preload(starting): 8 — 11 kg-cm
(6.9 — 9.5 in.-lb 0.8 — 1.1 N·m)

SST 09616-00010

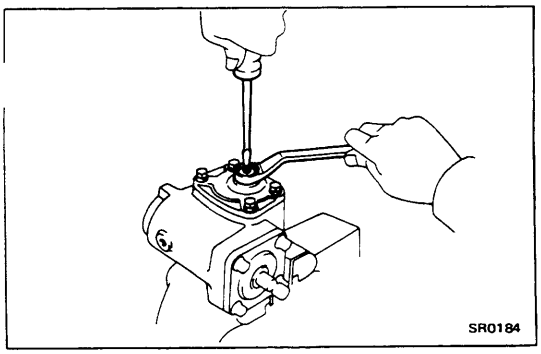

7. TIGHTEN ADJUSTING SCREW LOCK NUT

(a) Hold the screw with a screwdriver while tightening the lock nut.

(b) Torque the lock nut.

Torque: 425 kg-cm (31 ft-lb, 42 N·m)

NOTE: Check that the preload is still correct.

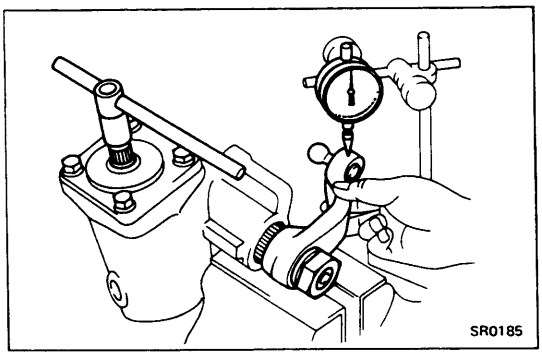

8. INSTALL PITMAN ARM

Align the marks on the sector shaft with the pitman arm. Install the pitman arm and tighten the nut finger tight.

9. MEASURE SECTOR SHAFT BACKLASH

Install the backlash gauge. Check that the sector shaft has backlash 0 — 0.27 mm (0 — 0.0106 in.) within 100 degrees of the left and right sides from neutral position.

10. REPLENISH WITH GEAR OIL

Oil type: API GL-4, SAE 90

Capacity: 580 cc (35.4 cu in.)

11. INSTALL OIL FILLER PLUG

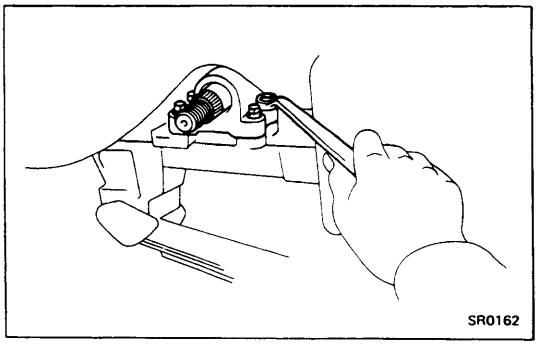

INSTALLATION OF GEAR HOUSING

(See page SR-33)

1. INSTALL GEAR HOUSING

Install the gear housing and torque the four mount bolts.

Torque: 575 kg-cm (42 ft-lb, 56 N·m)

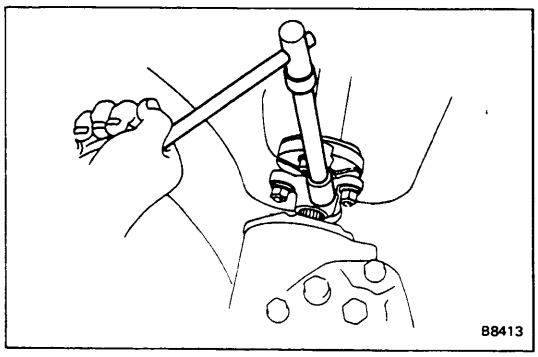

2. CONNECT INTERMEDIATE SHAFT TO WORM SHAFT

(a) Align matchmarks on the intermediate shaft and the worm shaft.

(b) Torque the coupling mount bolt.

Torque: 400 kg-cm (29 ft-lb, 39 N·m)

(c) Install the stone shield to the gear housing.

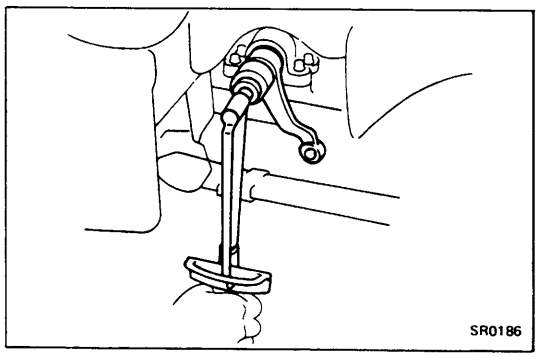

3. INSTALL PITMAN ARM

(a) Align marks on the sector shaft and the pitman arm.

(b) Torque the mount nut.

Torque: 1,750 kg-cm (127 ft-lb, 172 N·m)

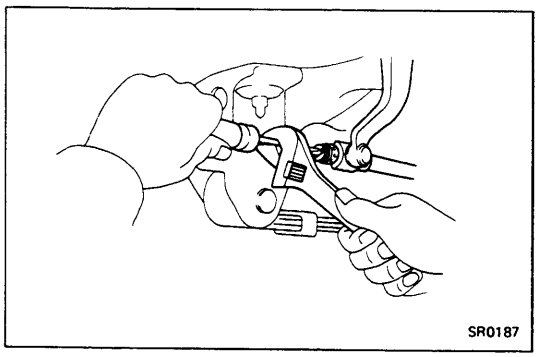

4. CONNECT DRAG LINK

(a) Insert the pitman arm in the drag link.

(b) Tighten the plug completely and then loosen 1-1/3 turns.

(c) Secure the plug by inserting a cotter pin.

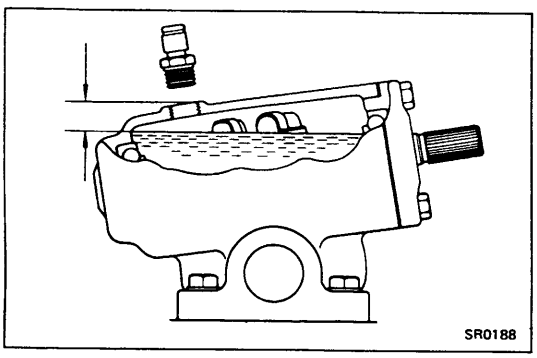

5. FILL GEAR HOUSING WITH GEAR OIL

Oil type: API GL-4, SAE90
Oil level: 12 — 17 mm (0.47 — 0.67 in.) from top
Capacity: 580 cc (35.4 cu in.)

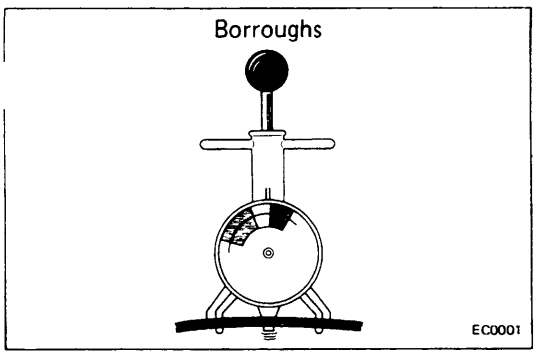

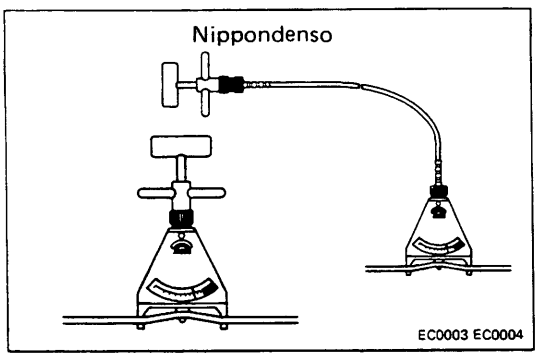

POWER STEERING

On-Vehicle Inspection

CHECK OF DRIVE BELT TENSION

Using belt tension gauge, check the drive belt tension.
Belt tension gauge:

Nippondenso BTG-20 (95506-00020) or
Borroughs No. BT-33-73F

Drive belt tension:

New belt	**125 ± 25 lb**
Used belt	**80 ± 20 lb**

NOTE:
- "New belt" refers to a brand new belt which has never before been used.
- "Used belt" refers to a belt which has been used on a running engine for 5 minutes or more.

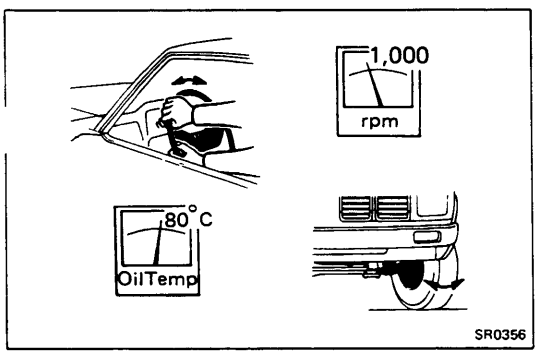

FLUID LEVEL CHECK

1. KEEP VEHICLE LEVEL

2. BOOST FLUID TEMPERATURE

With the engine idling at 1,000 rpm or less, turn the steering wheel from lock to lock several times to boost fluid temperature.

Fluid temperature: 80°C(176°F)

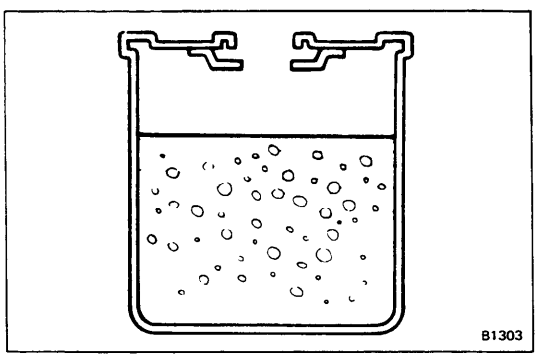

3. CHECK FOR FOAMING OR EMULSIFICATION

NOTE: Foaming and emulsification indicate the existence of air in the system or that the fluid level is too low.

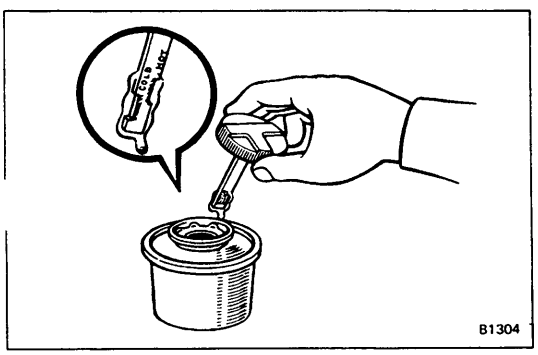

4. CHECK FLUID LEVEL IN RESERVOIR

Check the fluid level and add fluid if necessary.

Fluid: ATF DEXRON or DEXRON II

NOTE: Check that the fluid level is within the HOT LEVEL of the dipstick. If the fluid is cold, check that it is within the COLD LEVEL of the dipstick.

REPLACEMENT OF POWER STEERING FLUID

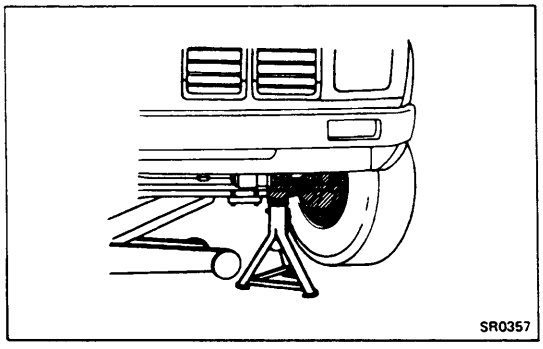

1. JACK UP FRONT OF VEHICLE AND SUPPORT IT WI STANDS

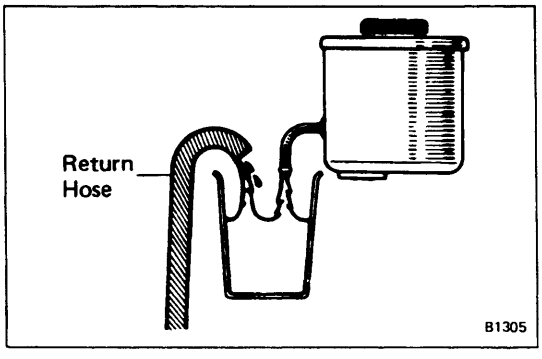

2. REMOVE FLUID RETURN HOSE FROM RESERVOIR TANK AND DRAIN FLUID INTO CONTAINER

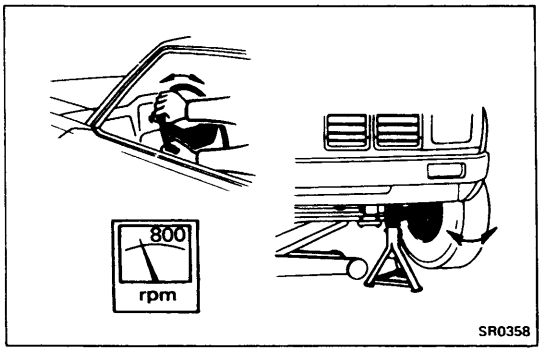

3. WITH ENGINE IDLING, TURN STEERING WHEEL FROM LOCK TO LOCK WHILE DRAINING FLUID
4. STOP ENGINE

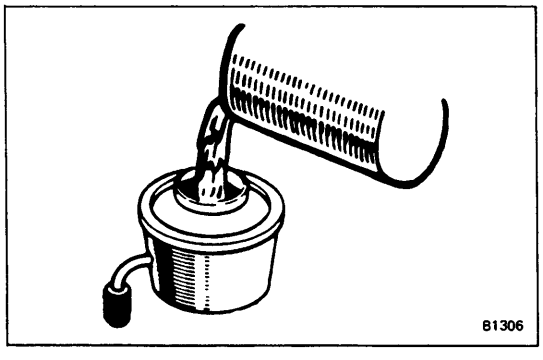

5. FILL RESERVOIR TANK WITH FRESH FLUID
   Fluid: ATF DEXRON or DEXRON II

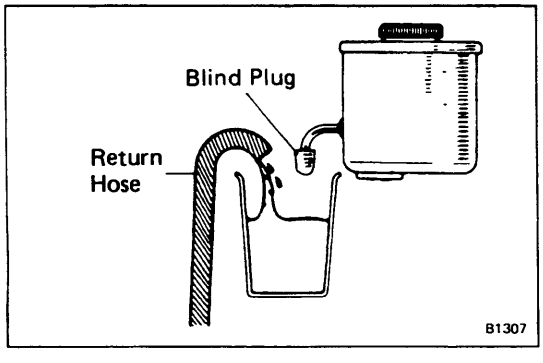

6. START ENGINE AND RUN IT AT 1,000 RPM
   After 1 or 2 seconds, fluid will begin to discharge from the return hose. Stop the engine immediately at this time.
7. REPEAT STEPS 5 AND 6 FOUR OR FIVE TIMES UNTIL THERE IS NO MORE AIR IN FLUID
8. CONNECT RETURN HOSE TO RESERVOIR TANK
9. BLEED POWER STEERING SYSTEM

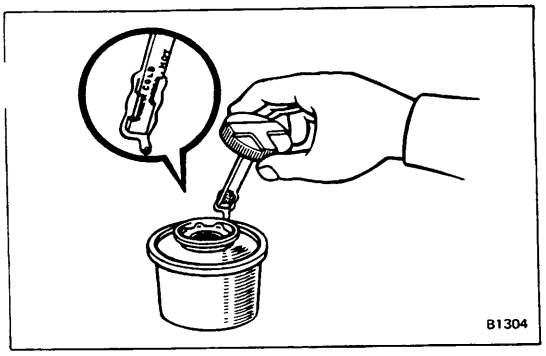

Bleeding of Power Steering System

1. **CHECK FLUID LEVEL IN RESERVOIR TANK**

   Check the fluid level and add fluid if necessary.

   Fluid: ATF DEXRON or DEXRON II

   NOTE: Check that the fluid level is within the HOT LEVEL of the dipstick. If the fluid is cold, check that it is within the COLD LEVEL of the dipstick.

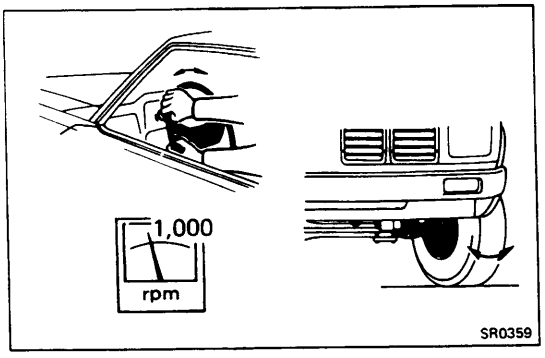

2. **START ENGINE AND TURN STEERING WHEEL FROM LOCK TO LOCK THREE OR FOUR TIMES**

   Run the engine at 1,000 rpm or less.

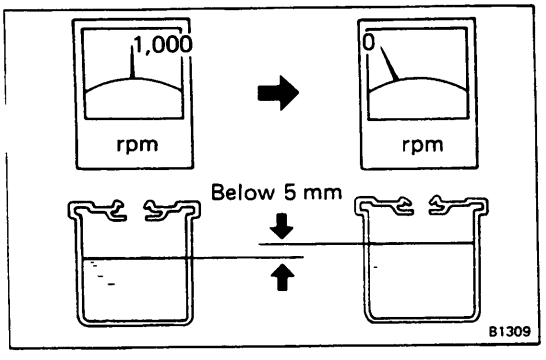

3. **CHECK THAT FLUID IN RESERVOIR IS NOT FOAMY OR CLOUDY AND DOES NOT RISE OVER MAXIMUM WHEN ENGINE IS STOPPED**

   Measure the fluid level with the engine running. Stop the engine and measure the fluid level.

   Maximum rise: 5 mm (0.20 in.)

   If a problem is found, repeat steps 7 and 8. Repair the vane pump if the problem persists.

Oil Pressure Check

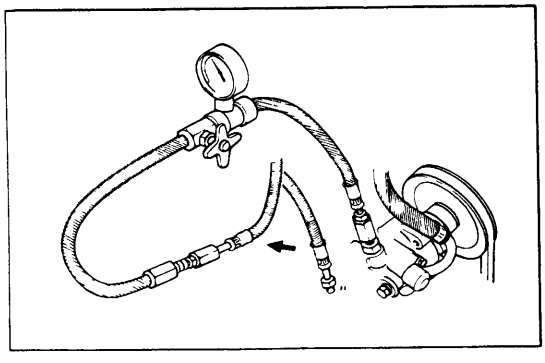

1. **CONNECT PRESSURE GAUGE**

   (a) Using SST, remove the pressure line from the vane pump.

   SST 09631-22020

   (b) Connect the gauge side of the pressure gauge to the vane pump and the valve side to the pressure line.

   (c) Bleed the system. Start the engine and turn the steering wheel from lock to lock two or three times.

   (d) Check that the fluid level is correct.

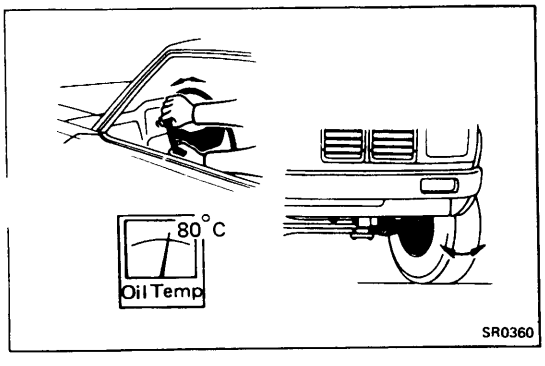

2. **CHECK THAT FLUID TEMPERATURE IS AT LEAST 80°C (176°F)**

3. **START ENGINE AND RUN IT AT IDLE**

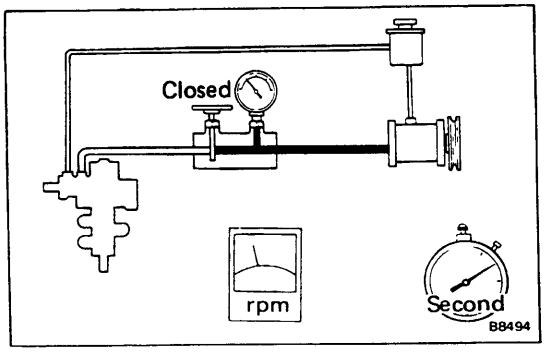

4. CHECK FLUID PRESSURE READING WITH VALVE CLOSED

Close the pressure gauge valve and observe the read. on the gauge.

Minimum pressure:

2WD 75 kg/cm² (1,067 psi, 7,355 kPa)
4WD 65 kg/cm² (924 psi, 6,374 kPa)

NOTE: Do not keep the valve closed for more than 10 seconds.

If pressure is low, repair or replace the vane pump.

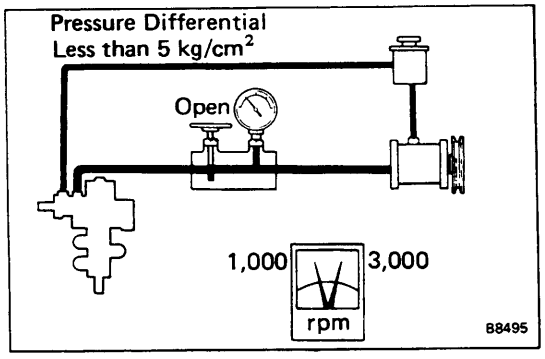

5. OPEN VALVE FULLY

6. CHECK AND RECORD PRESSURE READING AT 1,000 RPM

7. CHECK AND RECORD PRESSURE READING AT 3,000 RPM

Check that there is less than 5 kg/cm² (71 psi, 490 kPa) difference in pressure between the 1,000 rpm and 3,000 rpm checks.

If the difference is greater, repair or replace the vane pump flow control valve.

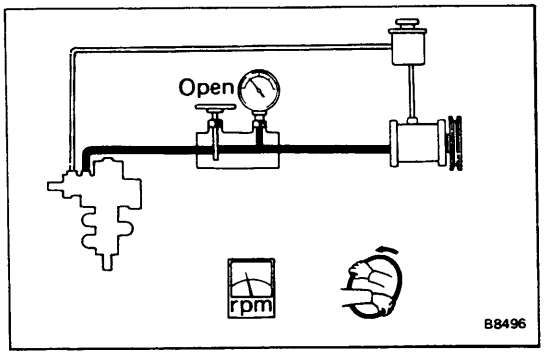

8. CHECK PRESSURE READING WITH STEERING WHEEL TURNED TO FULL LOCK

Be sure the pressure gauge valve is fully opened and the engine idling.

Minimum pressure:

2WD 75 kg/cm² (1,067 psi, 7,355 kPa)
4WD 65 kg/cm² (924 psi, 6,374 kPa)

If pressure is low, the gear housing has an internal leak and must be repaired or replaced.

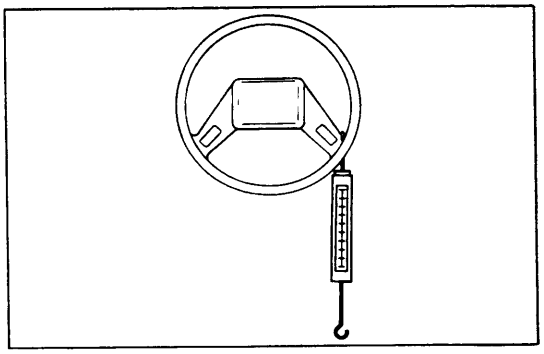

9. MEASURE STEERING EFFORT

Center the steering wheel and run the engine at idle.

Using a scale, measure the steering effort in both directions.

Maximum steering effort: 4 kg (8.8 lb, 39N)

If steering effort is excessive, repair the power steering unit.

NOTE: Be sure to consider the tire type, pressure and contact surface before making your diagnosis.

Power Steering Pump

REMOVAL OF PS PUMP

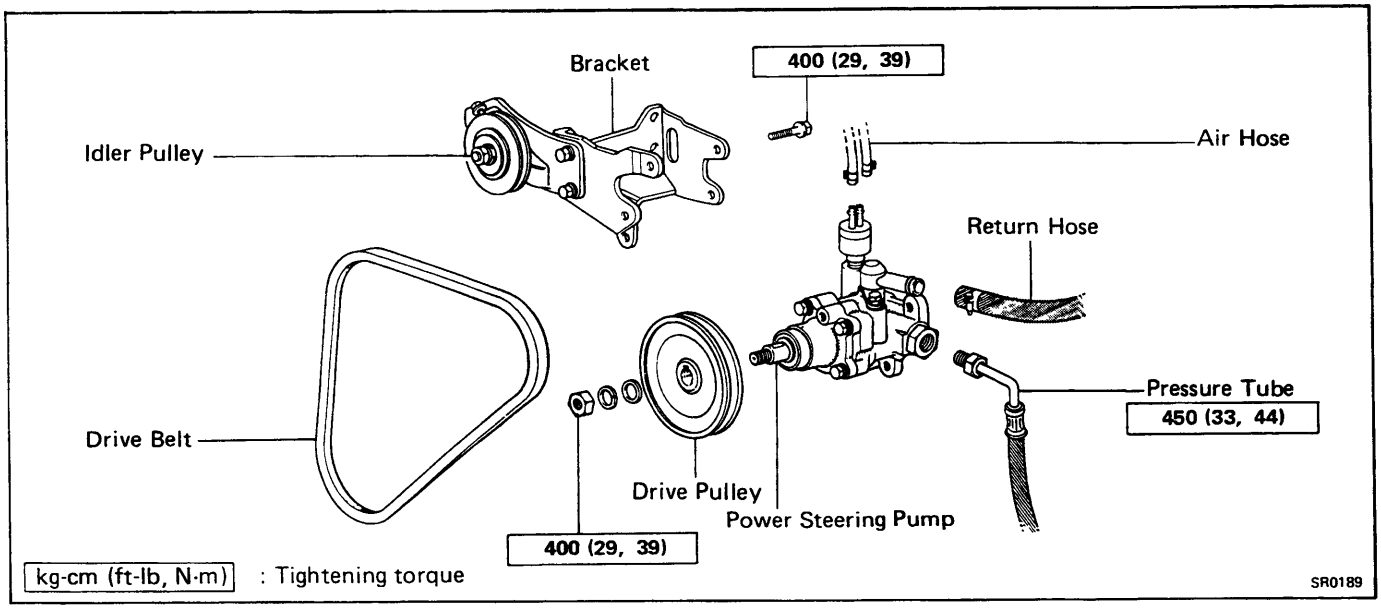

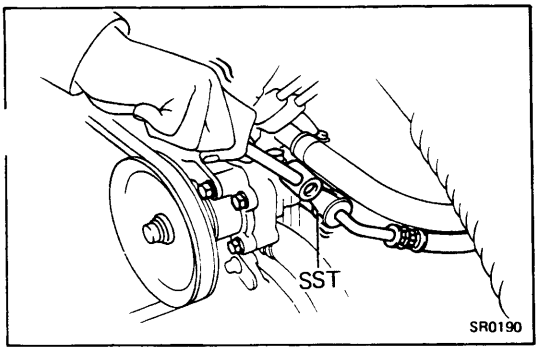

1. **DISCONNECT AIR HOSES FROM AIR CONTROL VALVE**
   (a) Disconnect the high tension cords from the distributor.
   (b) Disconnect the air hoses from the air valve.
2. **DRAW OUT FLUID FROM RESERVOIR TANK**
3. **DISCONNECT RETURN HOSE FROM PS PUMP**
4. **DISCONNECT PRESSURE TUBE FROM PS PUMP**
   Using SST, loosen and disconnect the pressure tube.
   SST 09631-22020

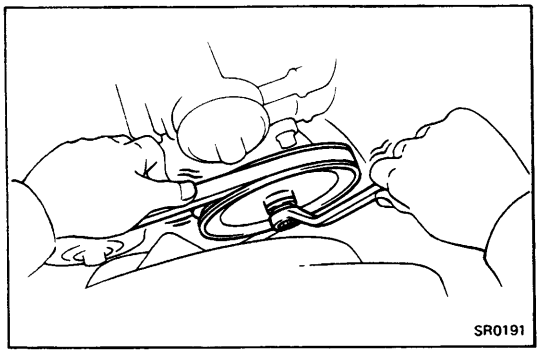

5. **LOOSEN DRIVE PULLEY NUT**
   Push on the drive belt to hold the pulley in place and loosen the pulley nut.

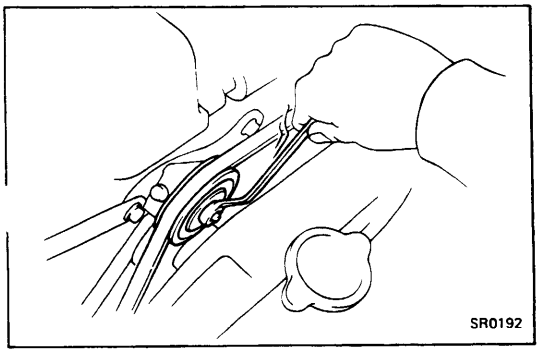

6. **REMOVE DRIVE BELT**
   (a) Loosen the idler pulley nut.
   (b) Loosen the adjusting bolt and remove the drive belt.
7. **REMOVE DRIVE PULLEY AND WOODRUFF KEY**
8. **REMOVE PS PUMP**
   Remove the PS pump mount bolts, and remove the PS pump from the bracket.

COMPONENTS

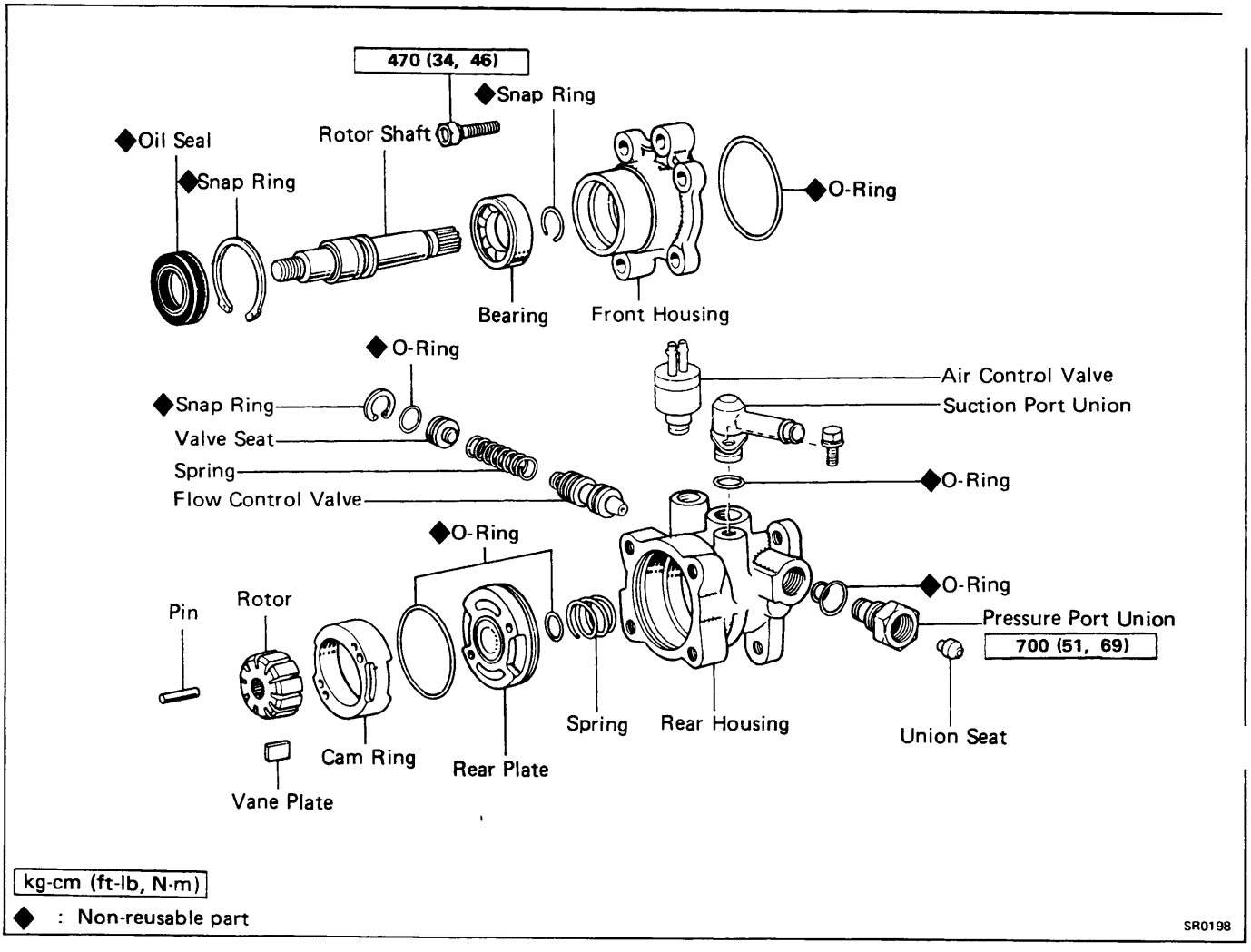

DISASSEMBLY OF PS PUMP

1. **CLAMP PS PUMP IN VISE**

   CAUTION: Do not tighten the vise too tight.

2. **REMOVE AIR CONTROL VALVE FROM REAR HOUSING (22R-E only)**

3. **REMOVE SUCTION PORT UNION FROM REAR HOUSING**

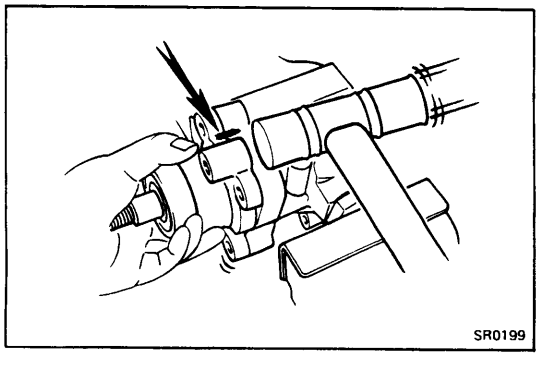

4. **REMOVE FRONT HOUSING**

   (a) Place matchmarks on the front and rear housing.

   (b) Remove the four front housing bolts.

   (c) Using a plastic hammer, tap off the front housing.

   CAUTION: Be careful that the vane plates, rotor and cr ring do not fall out.

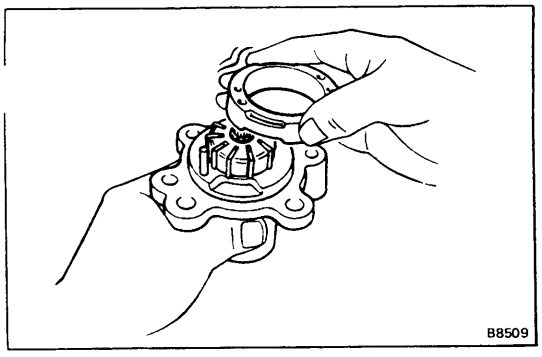

5. REMOVE CAM RING, ROTOR AND VANE PLATES

CAUTION: Be careful not to scratch the cam ring, rotor or vane plates.

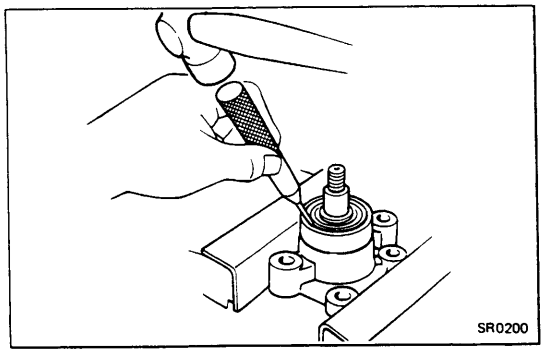

6. REMOVE ROTOR SHAFT

(a) Clamp the front housing in a vise.

CAUTION: Do not tighten the vise too tight.

(b) Using a chisel and hammer, pry off the oil seal.

(c) Using snap ring pliers, remove the snap ring.

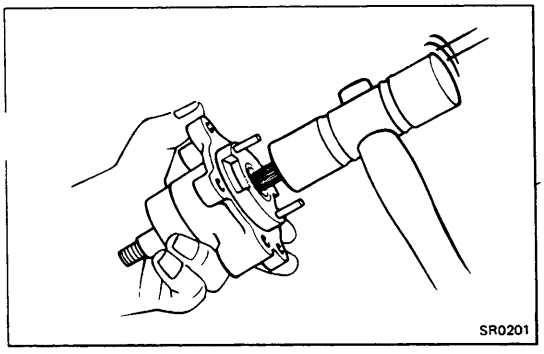

(d) Using a plastic hammer, lightly tap the rotor shaft out of the front housing.

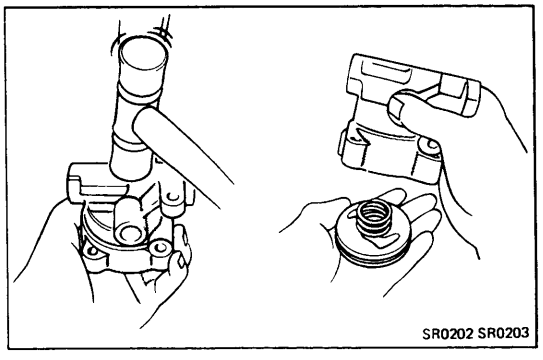

7. REMOVE REAR PLATE AND SPRING

Using a plastic hammer, tap the bottom end of the rear housing, and remove the rear plate and spring.

CAUTION: Avoid gripping the rear plate with pliers as this could damage it.

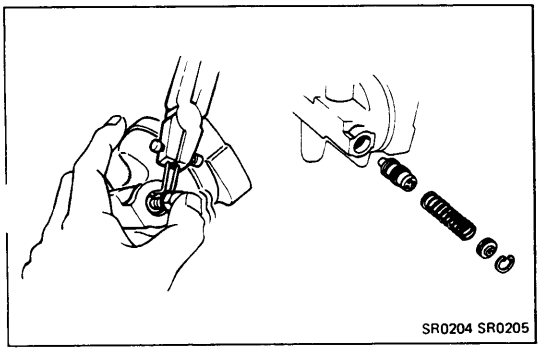

8. REMOVE FLOW CONTROL VALVE

(a) Temporarily install a bolt to the plug.

(b) Push the bolt and remove the snap ring with snap ring pliers.

(c) Pull out the bolt and remove the plug.

(d) Remove the spring and flow control valve by hand.

CAUTION: Use care not to drop, scratch or nick this valve.

9. REMOVE PRESSURE PORT UNION

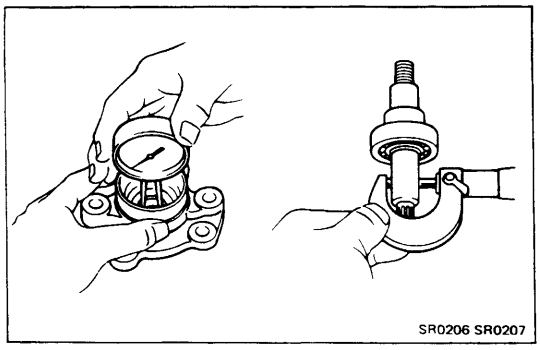
SR0206 SR0207

INSPECTION OF PS PUMP

1. INSPECT BUSHING AND MEASURE BUSHING OIL CLEARANCE

(a) Check the bushing for wear or damage. The bushing cannot be replaced separately.

If wear or damage is found, replace entire housing.

(b) Check the oil clearance between the bushing and rotor shaft.

Maximum oil clearance: 0.07 mm (0.0028 in.)

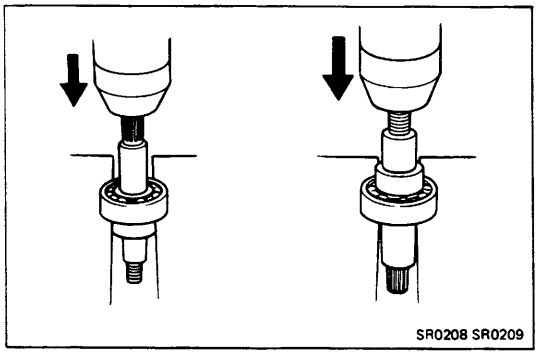
SR0208 SR0209

2. IF NECESSARY, REPLACE ROTOR SHAFT BEARING

(a) Using snap ring pliers, remove the snap ring.

(b) Using a press, press out the bearing.

(c) Using a press, press in the bearing.

(d) Using snap ring pliers, install the snap ring.

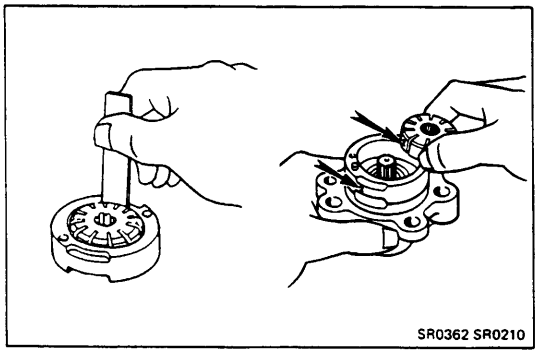
SR0362 SR0210

3. INSPECT ROTOR AND CAM RING

Measure the cam ring thickness. Check that the difference between the rotor and cam ring measurement is less than maximum.

Maximum difference: 0.06 mm (0.0024 in.)

If the difference is excessive, replace the cam ring with one having the same letter as on the rotor.

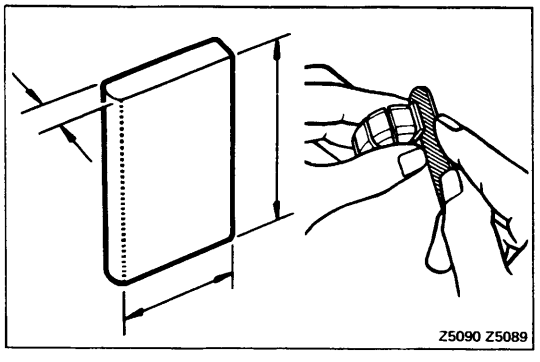
Z5090 Z5089

4. INSPECT AND MEASURE VANE PLATES

(a) Check the vane plates for wear or scratches.

(b) Measure the length, height and thickness of the vane plates.

Minimum length: 14.97 mm (0.5894 in.)
Minimum height: 7.8 mm (0.307 in.)
Minimum thickness: 1.7 mm (0.067 in.)

(c) Measure the clearance between the vane plate and rotor groove.

Maximum clearance: 0.06 mm (0.0024 in.)

NOTE: There are five vane lengths with the following rotor and cam ring numbers:

Rotor and cam ring number	Vane length mm (in.)
None	14.996 — 14.998 (0.5904 — 0.5905)
1	14.994 — 14.996 (0.5903 — 0.5904)
2	14.992 — 14.994 (0.5902 — 0.5903)
3	14.992 — 14.994 (0.59016 — 0.59024)
4	14.988 — 14.990 (0.5901 — 0.5902)

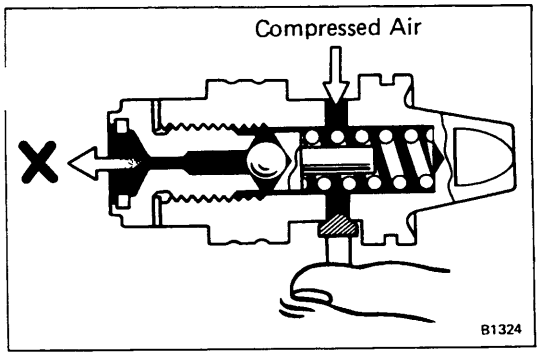

5. INSPECT FLOW CONTROL VALVE

(a) Check the flow control valve for wear or damage.

(b) Apply fluid to the valve and check that if falls smoothly into the valve hole by its own weight.

(c) Check the flow control valve for leakage.

- Close one of the holes and apply compressed air [4 or 5 kg/cm² (57 or 71 psi, 392 or 490 kPa)] into the opposite side.
- Confirm that air does not come out from the end hole.

If necessary, replace the valve with one having the same letter on the rear housing.

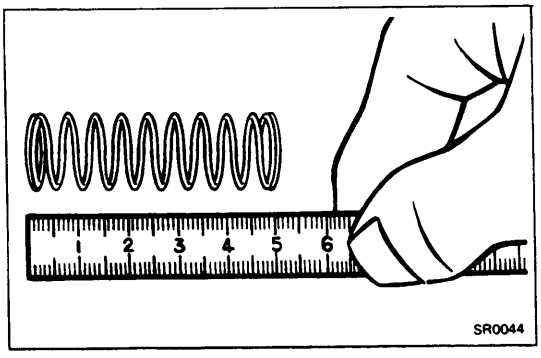

6. INSPECT FLOW CONTROL VALVE SPRING

Check that the spring is within specification.

Spring length: 47 — 50 mm (1.85 — 1.97 in.)

If the spring is not within specification, replace it.

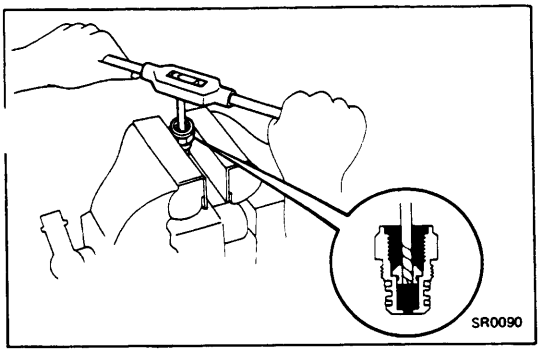

7. IF NECESSARY, REPLACE UNION SEAT

(a) Using a screw extractor, remove the union seat.

(b) Install a new floating type union seat.

NOTE: Only floating type parts are available.

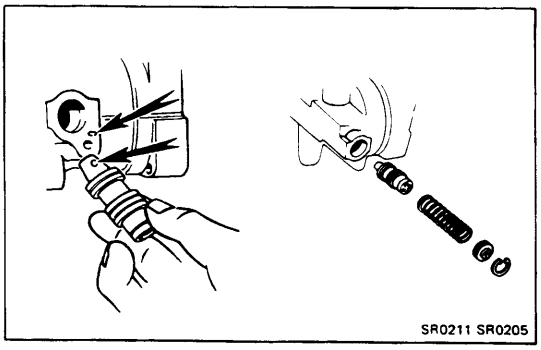
SR0211 SR0205

ASSEMBLY OF PS PUMP

(See page SR-46)

1. INSTALL FLOW CONTROL VALVE

NOTE: Be sure the letter inscribed on the flow control valve matches the letter stamped on the rear of the pump body.

Inscribed mark: A, B, C, D, E or F

Install the flow control valve, spring, plug and snap ring.

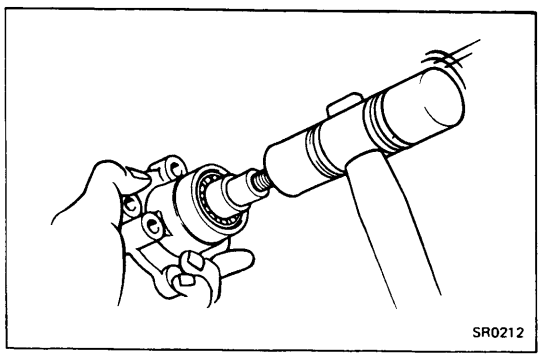
SR0212

2. INSTALL PRESSURE PORT UNION

Install and torque the union.

Torque: 700 kg-cm (51 ft-lb, 69 N·m)

3. INSTALL ROTOR SHAFT TO FRONT HOUSING

Install the rotor shaft into the front housing by tapping it in with a plastic hammer.

4. INSTALL SNAP RING

Using snap ring pliers, install the snap ring to the front housing.

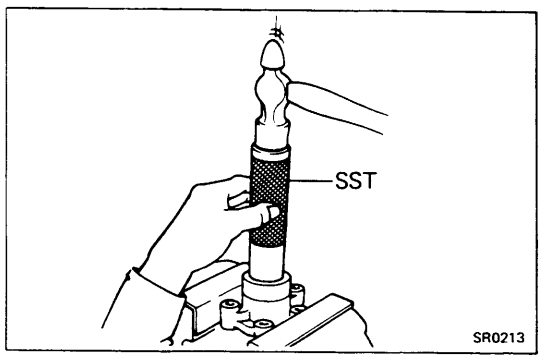

SR0213

5. INSTALL OIL SEAL

(a) Apply a light coat of MP grease to the oil seal lip.

(b) Using SST and hammer, install the oil seal.

SST 09608-30011

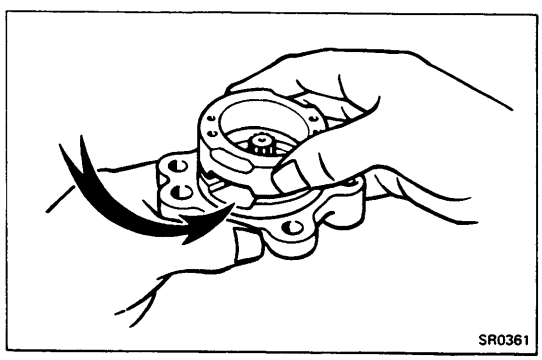
SR0361

6. INSTALL O-RING

7. INSTALL CAM RING

Align the fluid passages of the cam ring and front housing, and install the cam ring.

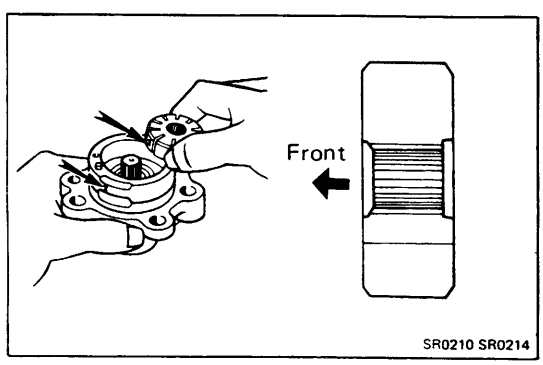

SR0210 SR0214

8. INSTALL ROTOR

Install the rotor with the chamfered end facing toward the front.

NOTE: Be sure the letters inscribed on the cam ring and rotor match.

Inscribed mark: 1, 2, 3, 4 or None

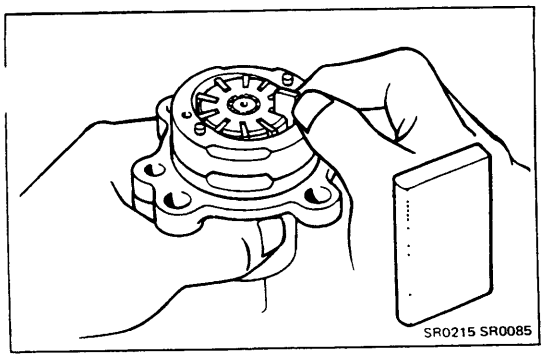

9. INSTALL VANE PLATES

Install the vane plates with the round end facing outward.

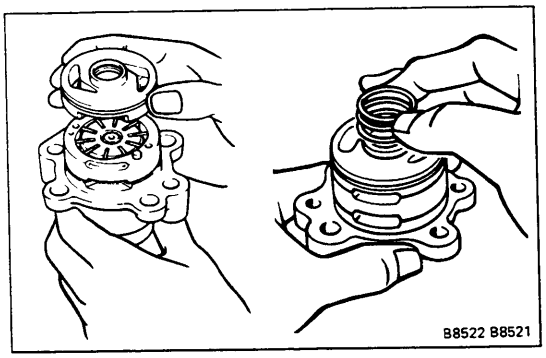

10. INSTALL REAR PLATE AND SPRING

(a) Align the fluid passages of the rear plate and cam ring, and install the rear plate with the spring.

(b) Place the spring on the rear plate.

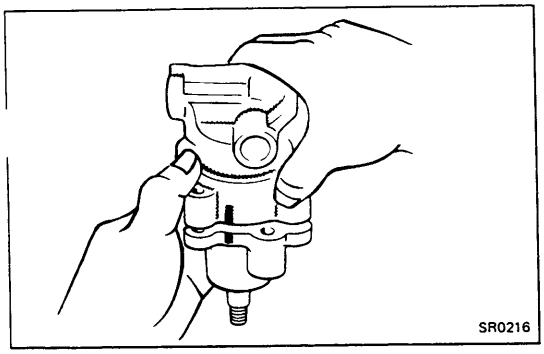

11. INSTALL REAR HOUSING

(a) Align the matchmarks on the front and rear housing, and assemble them.

(b) Tighten the front and rear housing mounting bolts by hand.

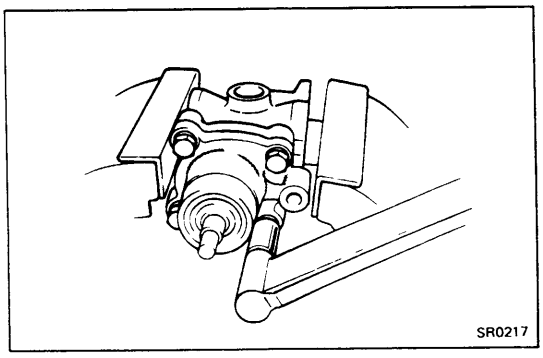

12. TIGHTEN FOUR HOUSING BOLTS

(a) Clamp the rear housing in a vise.

CAUTION: Do not tighten the vise too tight.

(b) Tighten the four housing bolts evenly in 3 or 4 passes.

Torque: 470 kg-cm (34 ft-lb, 46 N·m)

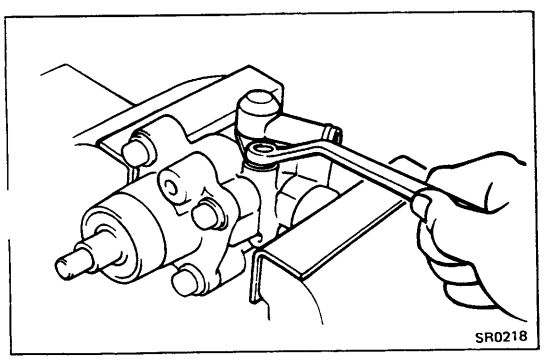

13. INSTALL UNION TO REAR HOUSING

Insert and tighten the union.

Torque: 130 kg-cm (9 ft-lb, 13 N·m)

14. INSTALL AIR CONTROL VALVE TO REAR HOUSING (22R-E only)

Install and tighten the air control valve.

Torque: 370 kg-cm (27 ft-lb, 36 N·m)

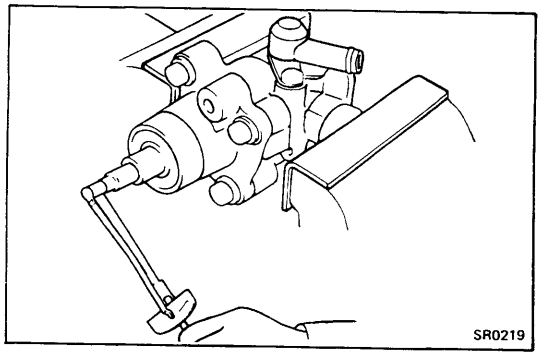

15. CHECK ROTOR SHAFT ROTATION CONDITION

(a) Check that the rotor shaft rotates smoothly without abnormal noise.

(b) Provisionally install the pulley nut and check the rotating torque.

Rotating torque: Less than 2.8 kg-cm (2.4 in.-lb, 0.3 N·m)

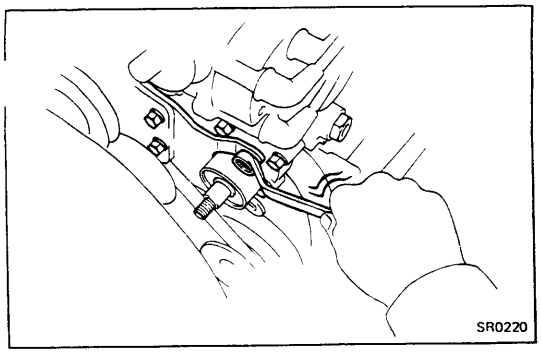

INSTALLATION OF PS PUMP

(See page SR-45)

1. **INSTALL PS PUMP**

Place the PS pump in position and torque the mount bolts.

Torque: 400 kg-cm (29 ft-lb, 39 N·m)

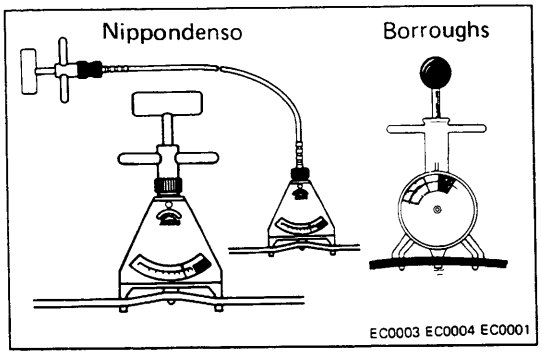

2. **INSTALL PULLEY AND DRIVE BELT**

(a) Install the woodruff key, pulley and set nut.

(b) Install the drive belt.

(c) Turn the adjusting bolt until the belt tension is at specified value.

Belt tension gauge:

Nippondenso BTG-20 (95506-00020) or
Borroughs No. BT-33-73F

Drive belt tension:

New belt	**125 ± 25 lb**
Used belt	**80 ± 20 lb**

NOTE: "New belt" refers to a brand new belt which has never before been used.
"Used belt" refers to a belt which has been used on a running engine for 5 minutes or more.

(d) Tighten the idler pulley nut and adjusting bolt.

(e) Push down on the drive belt to hold the pulley in place and torque the pulley set nut.

Torque: 440 kg-cm (32 ft-lb, 43 N·m)

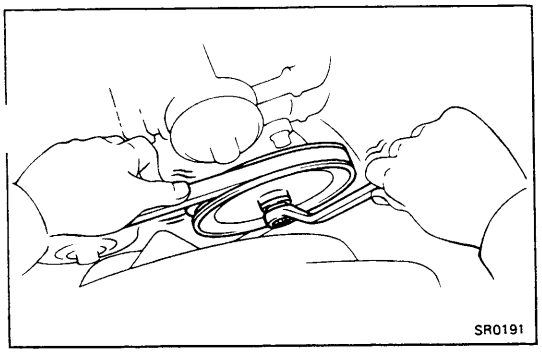

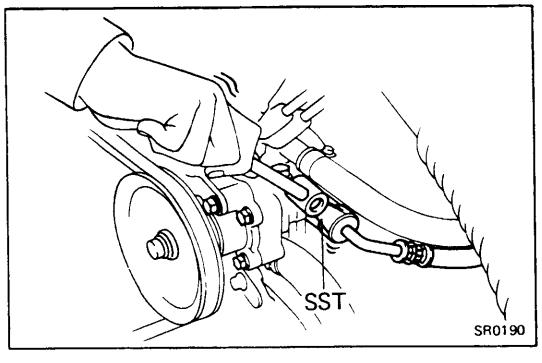

3. **CONNECT PRESSURE TUBE TO PS PUMP**

Using SST, torque the flare nut.

SST 09631-22020

Torque: 450 kg-cm (33 ft-lb, 44 N·m)

4. **CONNECT RETURN HOSE TO PS PUMP**

5. **CONNECT AIR HOSES TO AIR CONTROL VALVE**

(a) Connect the air hoses to the air control valve.

(b) Connect the high tension cords to the distributor.

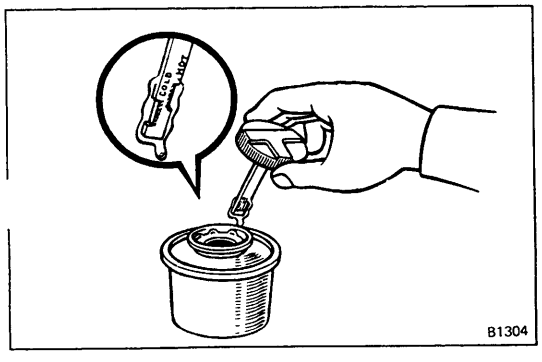

6. **FILL RESERVOIR WITH FLUID**

Fluid: ATF DEXRON or DEXRON II

7. **BLEED POWER STEERING**

8. **CHECK FOR FLUID LEAKS**

Gear Housing (2WD)

REMOVAL OF GEAR HOUSING

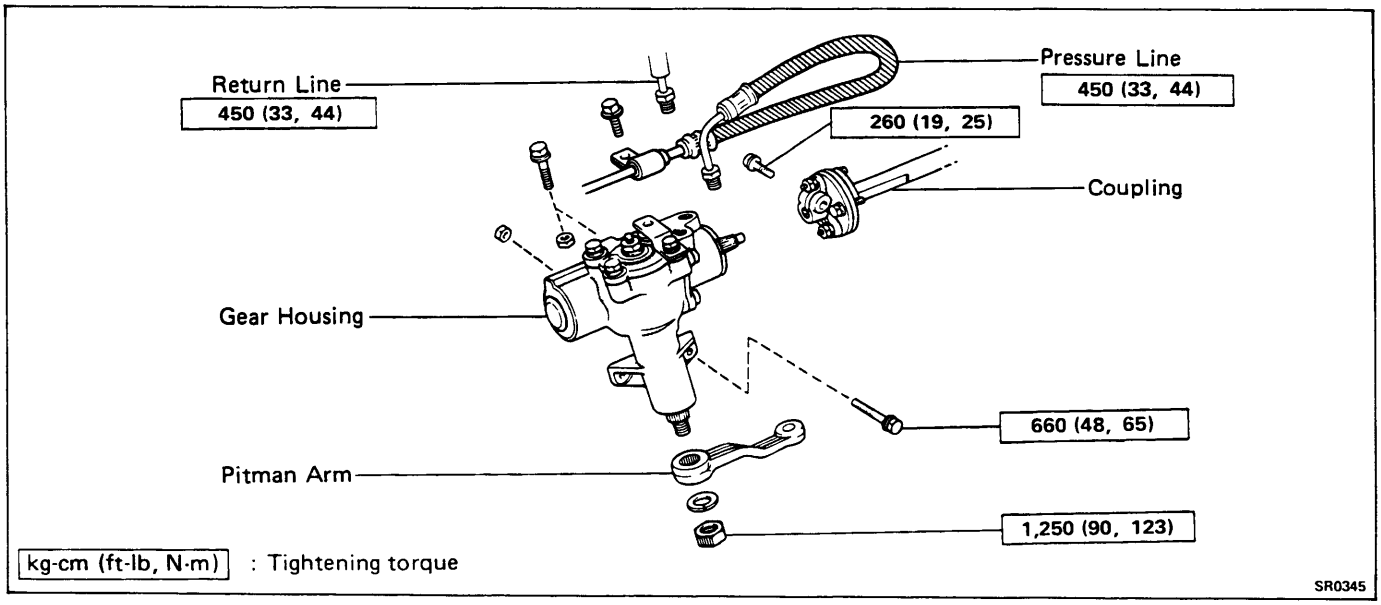

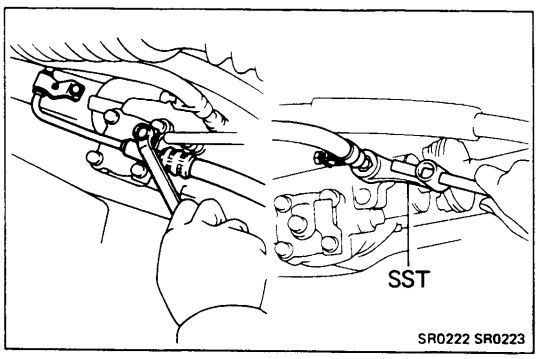

1. **DISCONNECT RETURN LINE AND PRESSURE LINE**
   (a) Remove the pressure line clamp bolts.
   (b) Using SST, disconnect the pressure and return lines.
   SST 09631-22020

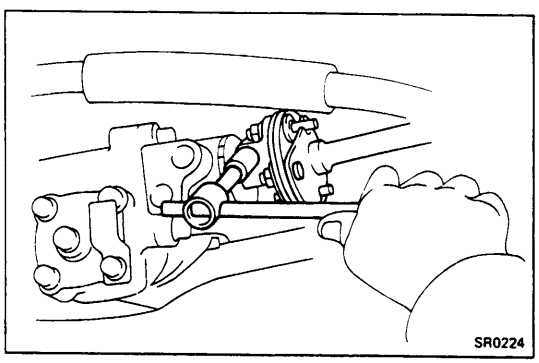

2. **REMOVE COUPLING BOLT**
3. **REMOVE PITMAN ARM MOUNT NUT**

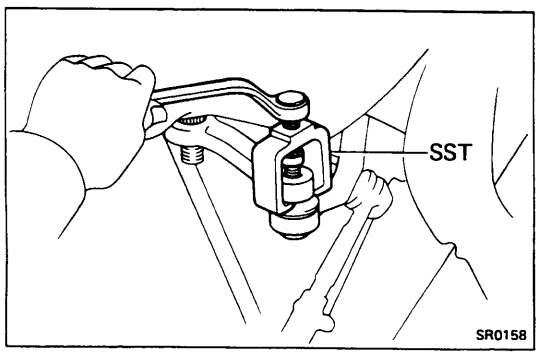

4. **DISCONNECT RELAY ROD FROM PITMAN ARM**
   (a) Remove the relay rod mount nut.
   (b) Using SST, disconnect the relay rod from the pitman arm.
   SST 09611-22012
5. **REMOVE GEAR HOUSING**
   Remove the three bolts and take out the gear housing.

COMPONENTS

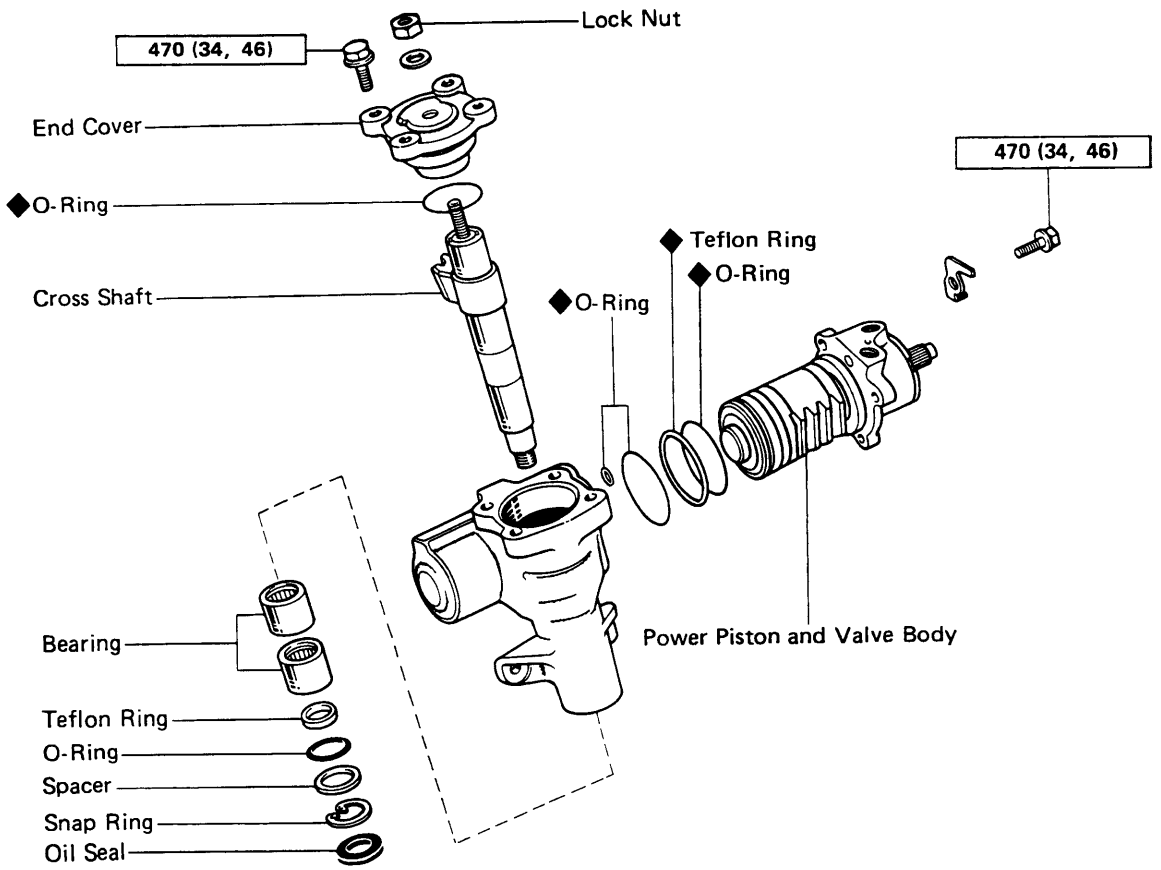

kg-cm (ft-lb, N·m) : Tightening torque
◆ : Non-reusable part

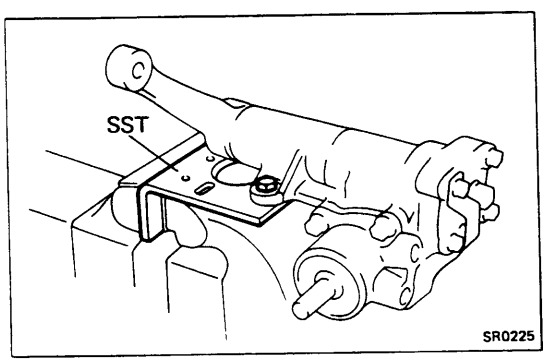

DISASSEMBLY OF GEAR HOUSING

1. MOUNT HOUSING ON STAND

Mount the gear housing on SST and clamp SST in a vise.
SST 09630-00011

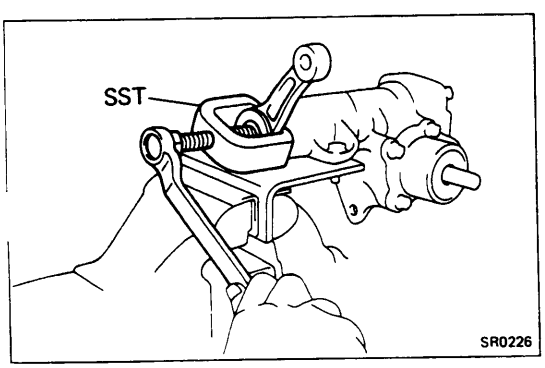

2. REMOVE PITMAN ARM

Using SST, remove the pitman arm.
SST 09610-55012

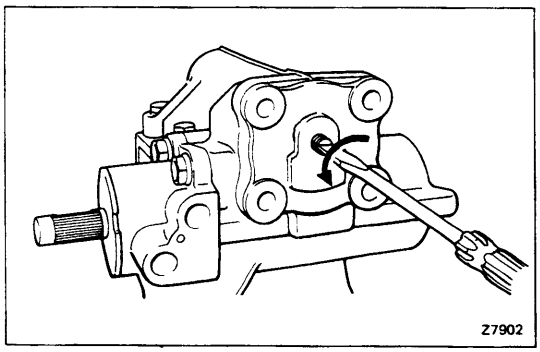

3. **REMOVE END COVER**
   (a) Remove the adjusting screw lock nut.
   (b) Remove the four bolts.
   (c) Screw in the adjusting screw until the cover comes off.

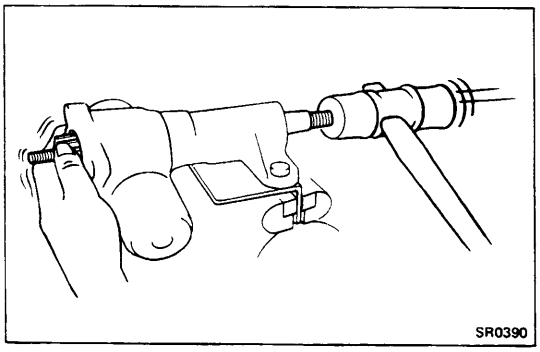

4. **REMOVE CROSS SHAFT**
   Using a plastic hammer, tap on the cross shaft end and pull out the shaft.

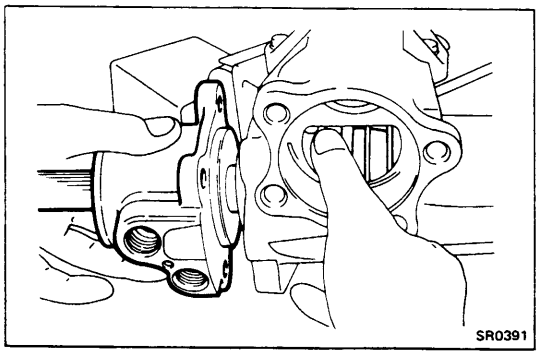

5. **REMOVE WORM GEAR VALVE BODY ASSEMBLY**
   (a) Remove the four cap screws from the housing.
   (b) Hold the power piston nut with your thumb so it cannot move, and turn the worm shaft clockwise. Th withdraw the valve body and power piston assembly.

   CAUTION: Ensure that the power piston nut does not come off the worm shaft.

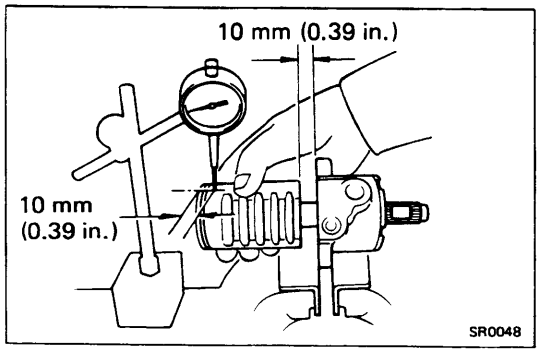

INSPECTION AND REPAIR OF STEERING GEAR HOUSING

1. **CHECK BALL CLEARANCE**
   (a) Mount the valve body in a vise.
   (b) Using a dial indicator, check the ball clearance. Move the worm gear up and down.

   Maximum ball clearance: 0.15 mm (0.0059 in.)

   If clearance is excessive, the power control valve assembly must be replaced.

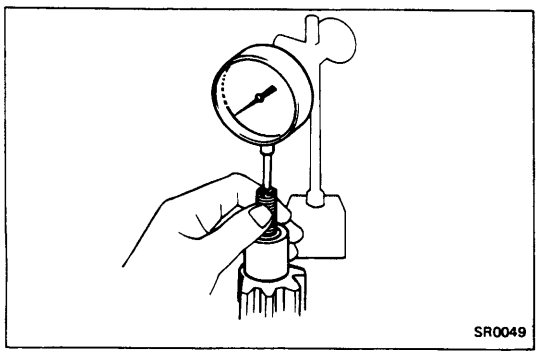

2. **CHECK CROSS SHAFT ADJUSTING SCREW END PLAY**
   (a) Clamp the cross shaft in a vise.
   (b) Using a dial indicator, check the end play.

   End play: 0.03 — 0.05 mm (0.0012 — 0.0020 in.)

   If end play is not correct, see step 4 for adjustment procedure.

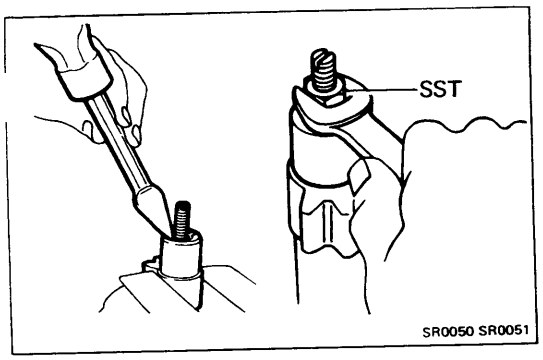

3. IF NECESSARY, ADJUST END PLAY

(a) Using a chisel and hammer, remove the lock nut stake.

(b) Using SST, loosen the lock nut.

SST 09630-00011

(c) Adjust the adjusting screw for correct end play and tighten the lock nut.

(d) Stake the lock nut.

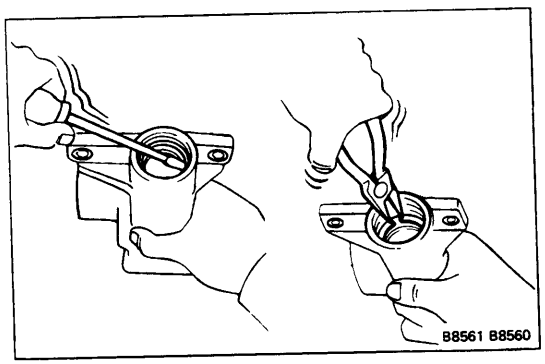

4. REPLACE TEFLON RING AND NEEDLE ROLLER BEARINGS

(a) Pry out the oil seal from the pitman arm end of the housing.

(b) Using snap ring pliers, remove the snap ring.

(c) Remove the metal spacer, teflon ring and O-ring.

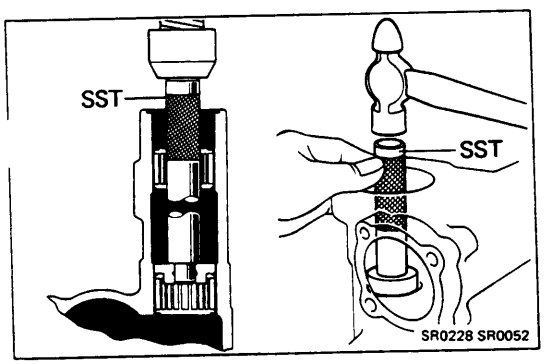

(d) Using SST, drive out the bearings.

SST 09630-00011

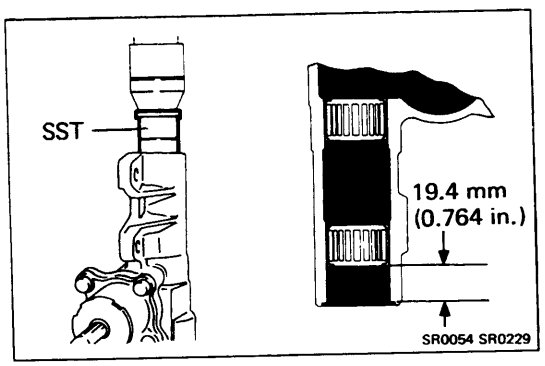

(e) Using SST, install the top bearing with the long flange out. Drive the bearing in flush with the inside casting surface.

SST 09630-00011

(f) Using SST, install the lower bearing with the long flange out. The SST will bottom and correctly position the bearing.

SST 09630-00011

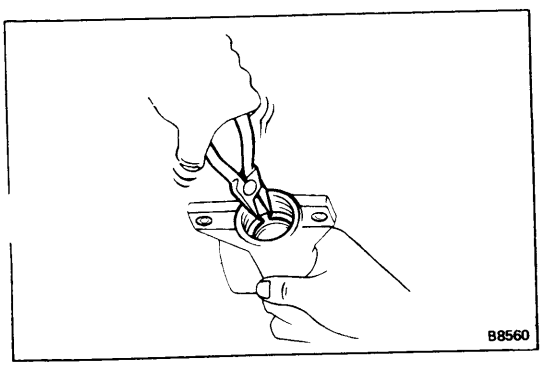

(g) Install the O-ring and metal spacer.

(h) Using snap ring pliers, install the snap ring.

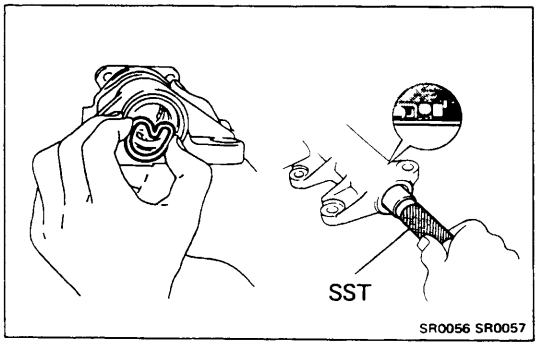

(i) Form the seal into a heart shape and install it by hand.

(j) Using SST, form the seal.

CAUTION: The seal must squeezed before inserting the sector shaft or damage will result.

SST 09630-00011

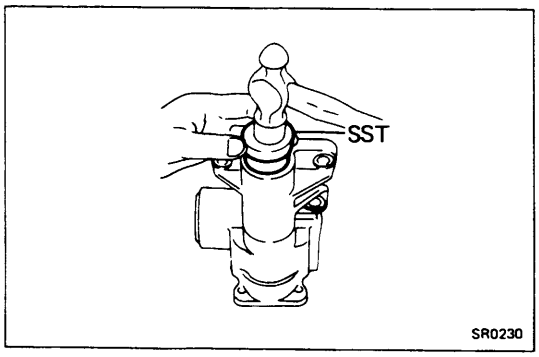

(k) Using SST, drive the oil seal into the gear housing.

SST 09630-00011

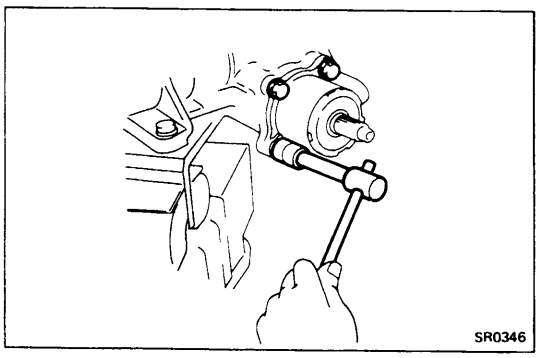

ASSEMBLY OF GEAR HOUSING

(See page SR-55)

1. INSTALL WORM GEAR VALVE BODY

(a) Install two new O-rings.

(b) Insert the valve body into the housing.

(c) Torque cap screws in a diagonal pattern.

Torque: 470 kg-cm (34 ft-lb, 46 N·m)

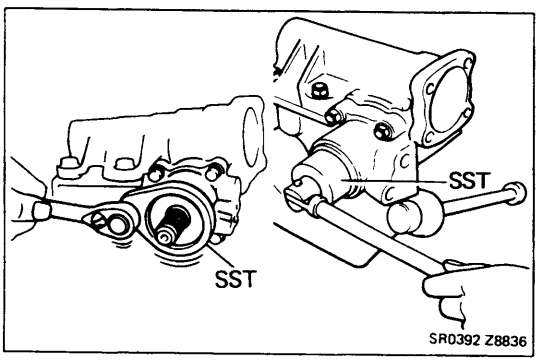

2. INSPECT WORM SHAFT BEARING

NOTE: If a new worm gear valve body is being installed, skip this procedure.

(a) Using SST, remove the lock nut.

SST 09630-00011

(b) Using SST, remove the bearing cap.

SST 09630-00011

(c) Remove the worm bearing and O-ring.

(d) Install a new O-ring and bearing cap.

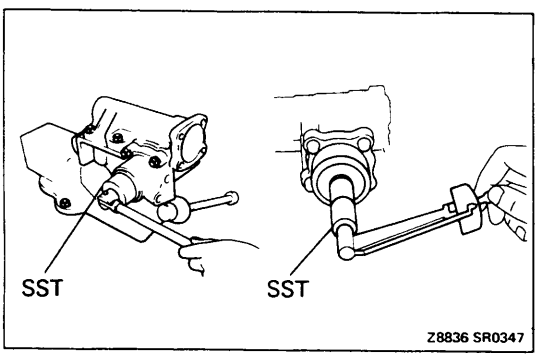

3. ADJUST WORM BEARING PRELOAD

(a) Using SST, tighten the bearing cap until the preload is correct.

SST 09630-00011

(b) Using SST and torque wrench, check the preload of the bearing.

SST 09616-00010

Preload: 4.0—6.5 kg-cm (3.5—5.6 in.-lb, 0.4—0.6 N·m)

NOTE: Hold the power piston nut to prevent it from turning.

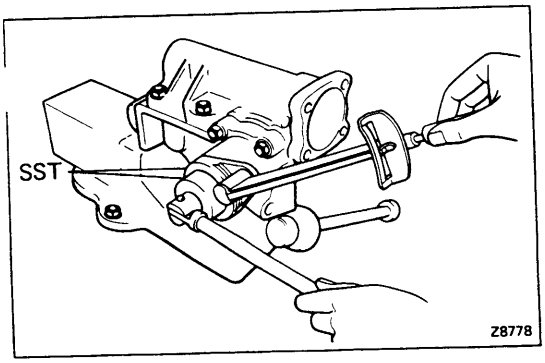

(c) Using SST, tighten the lock nut while holding the bearing cap with SST.

SST 09630-00011

Torque: 500 kg-cm (36 ft-lb, 49 N·m)

(d) Recheck the preload.

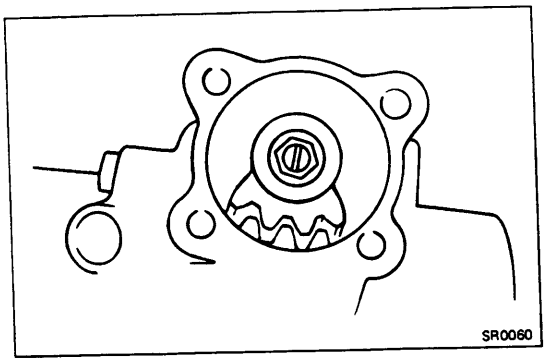

4. INSTALL CROSS SHAFT AND END COVER

(a) Install a new O-ring on the end cover.

(b) Assemble the cross shaft to the end cover.

NOTE: Fully loosen the adjusting screw.

(c) Set the worm gear at the center of the gear housing.

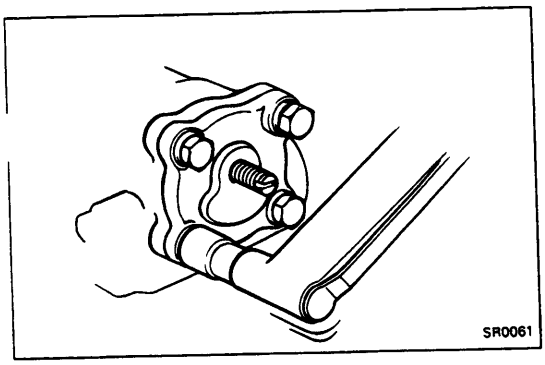

(d) Insert and push the cross shaft into the gear housing so that the center teeth mesh together.

(e) Install the four cap bolts, Torque the bolts in a diagonal pattern.

Torque: 470 kg-cm (34 ft-lb, 46 N·m)

5. DETERMINE CENTER POSITION OF GEAR BOX

Turn the worm shaft to full lock in both directions and determine the exact center.

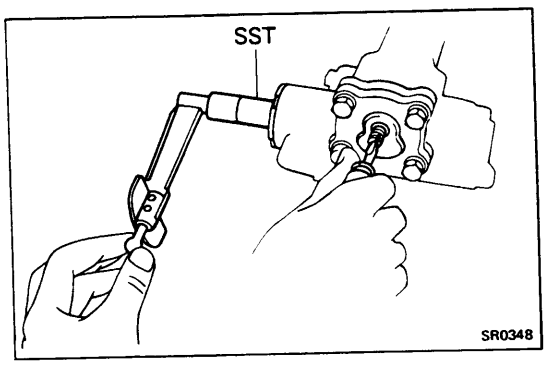

6. ADJUST TOTAL PRELOAD

(a) Install SST with a torque wrench on the center worm shaft.

SST 09616-00010

(b) Turn the adjusting screw while measuring the preload until it is correct.

Total preload:

Add worm shaft preload

2 — 3 kg-cm (1.7 — 2.6 in.-lb, 0.2 — 0.3 N·m)

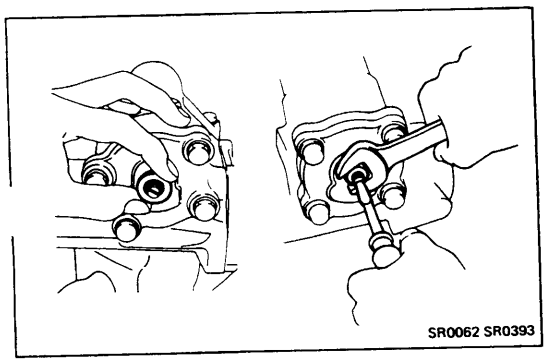

7. INSTALL NEW WASHER

8. INSTALL AND TIGHTEN LOCK NUT

Torque the lock nut while holding the adjusting screw.

Torque: 470 kg-cm (34 ft-lb,46 N·m)

9. RECHECK TOTAL PRELOAD

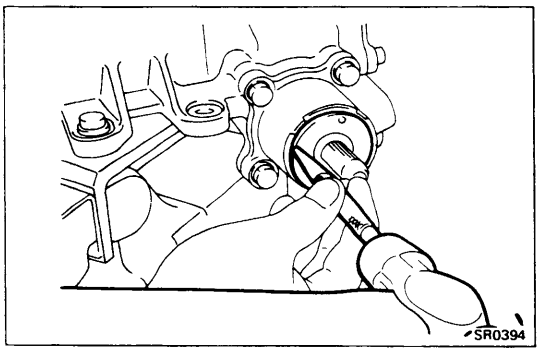

10. STAKE LOCK NUT

Using a punch and hammer, stake the lock nut at three places.

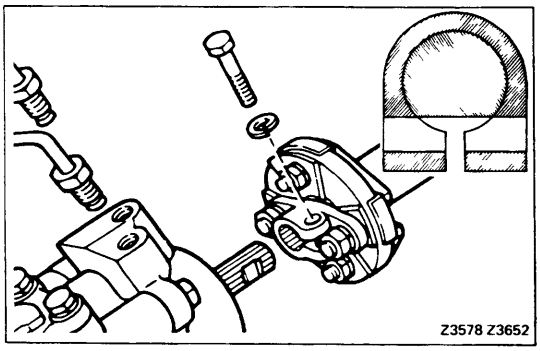

INSTALLATION OF GEAR HOUSING

(See page SR-54)

1. INSTALL GEAR HOUSING

(a) Line up the marks on the coupling and worm shaft.

(b) Torque the three mounting bolts.

Torque: 660 kg-cm (48 ft-lb, 65 N·m)

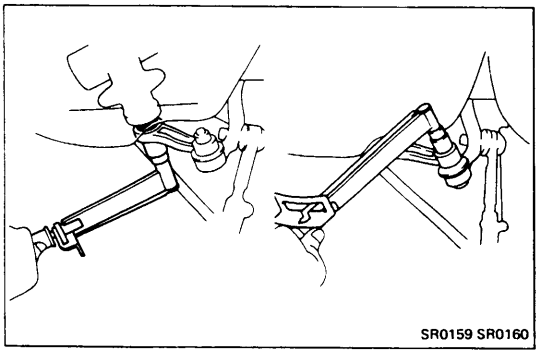

2. CONNECT PITMAN ARM TO GEAR HOUSING

(a) Align the marks on the pitman arm and cross shaft.

(b) Torque the pitman arm nut.

Torque: 1,250 kg-cm (90 ft-lb, 123 N·m)

3. CONNECT PITMAN ARM TO RELAY ROD

Connect the pitman arm to the relay rod and torque the mount nut.

Torque: 920 kg-cm (67 ft-lb, 90 N·m)

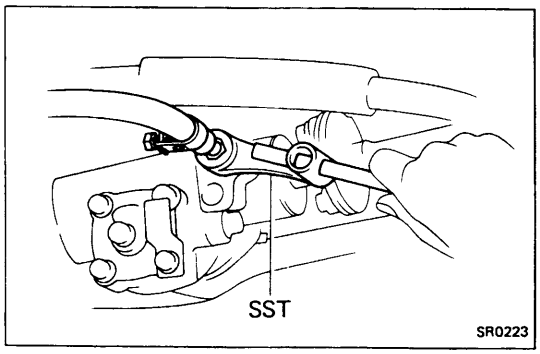

4. TORQUE COUPLING SET BOLT

Torque the coupling mount bolt.

Torque: 260 kg-cm (19 ft-lb, 25 N·m)

5. CONNECT PRESSURE LINE AND RETURN LINE

(a) Using SST, install and torque the union nuts.

Torque: 450 kg-cm (33 ft-lb, 44 N·m)

SST 09631-22020

NOTE: Be sure the hose is not touching the fender.

(b) Install the pressure line clamp bolts.

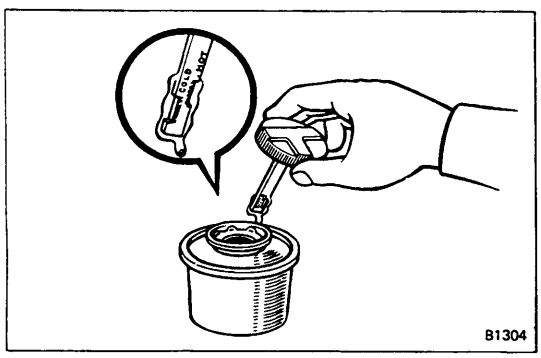

6. FILL RESERVOIR TANK WITH FLUID

Fluid: ATF DEXRON or DEXRON II

7. BLEED SYSTEM AND PERFORM PRESSURE CHECK

(See page SR-43)

Gear Housing (4WD)

REMOVAL OF GEAR HOUSING

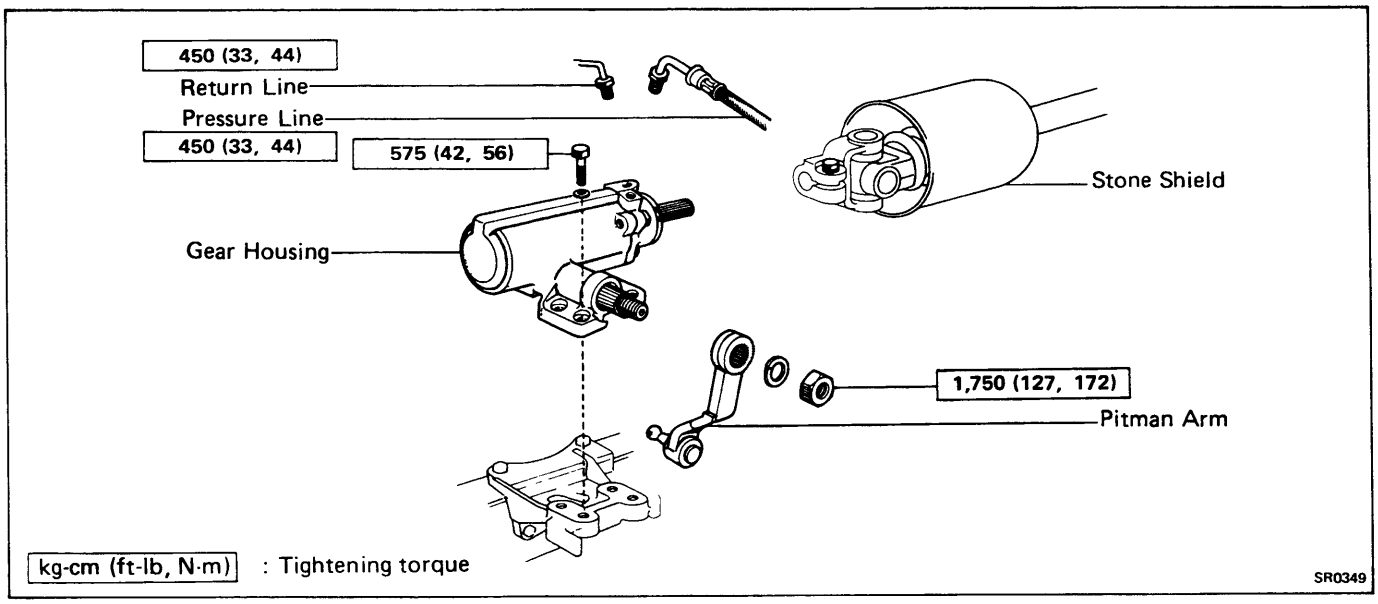

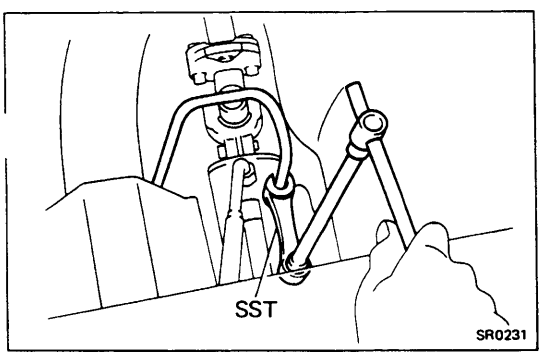

1. **REMOVE BATTERY**

2. **DISCONNECT RETURN LINE AND PRESSURE LINE**
   (a) Remove the engine under cover.
   (b) Remove the pressure and return line clamp bolts.
   (c) Using SST, disconnect the pressure and return lines from the gear housing.

   SST 09631-22020

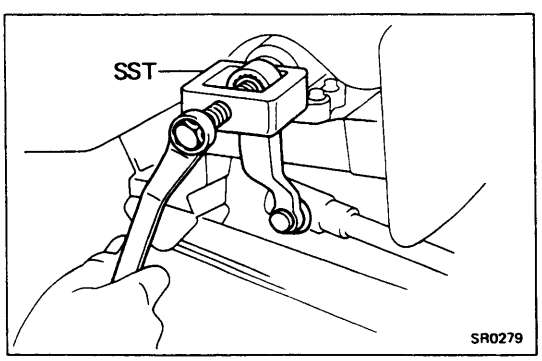

3. **REMOVE COUPLING BOLT**
   (a) Remove the stone shield from the gear housing.
   (b) Remove the coupling bolt.

4. **DISCONNECT PITMAN ARM FROM GEAR HOUSING**
   (a) Remove the pitman arm set nut.
   (b) Using SST, disconnect the pitman arm from the gear housing.

   SST 09610-55012

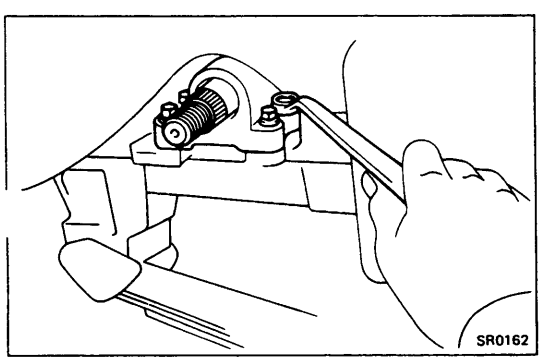

5. **REMOVE GEAR HOUSING**

   Remove the four bolts and the gear housing.

COMPONENTS

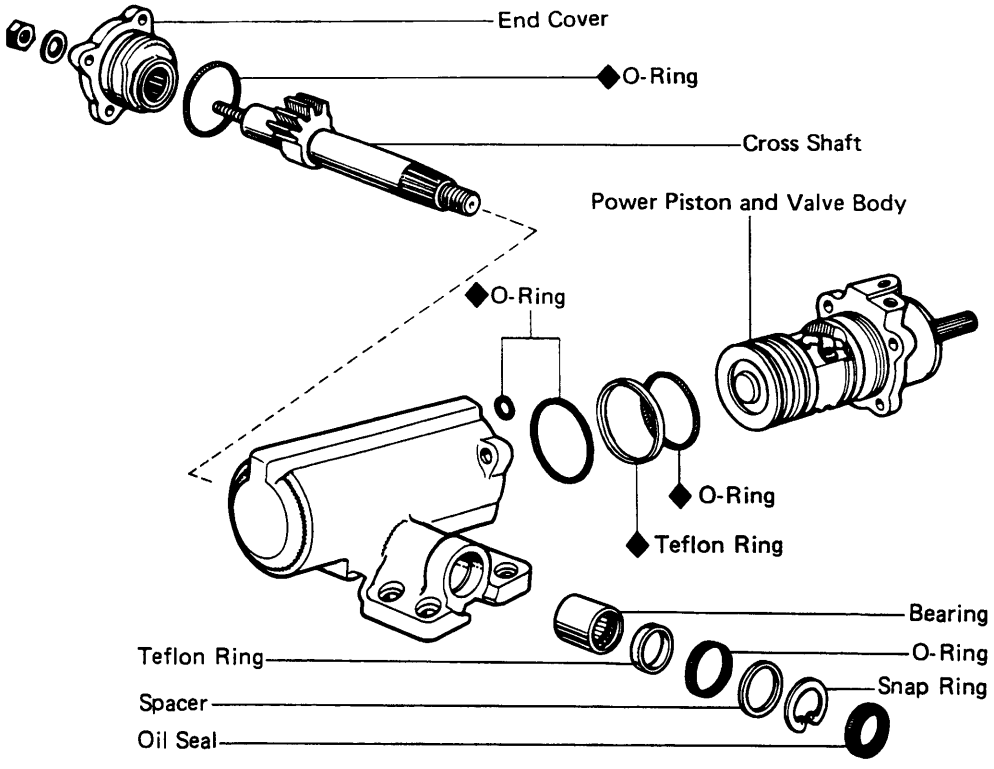

◆ : Non-reusable part

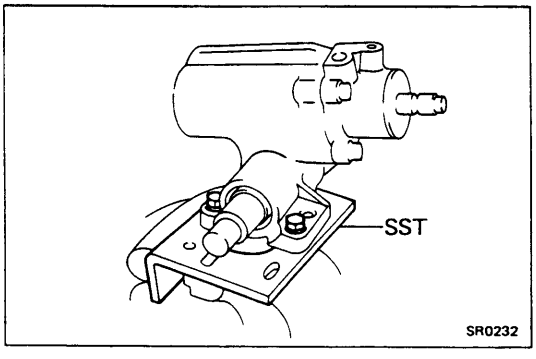

DISASSEMBLY OF GEAR HOUSING

1. MOUNT HOUSING ON STAND

Mount the gear housing on SST and clamp SST in a vise.
SST 09630-00011

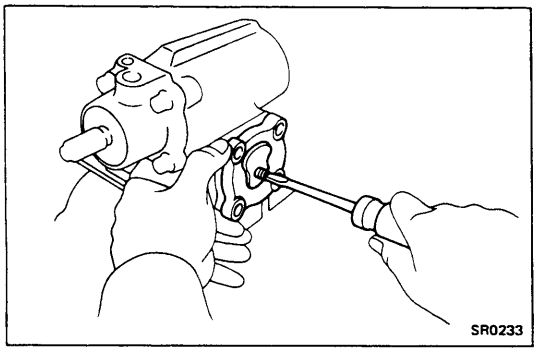

2. REMOVE END COVER

(a) Remove the adjusting screw lock nut and washer.
(b) Remove the four bolts.
(c) Screw in the adjusting screw until the cover comes off.

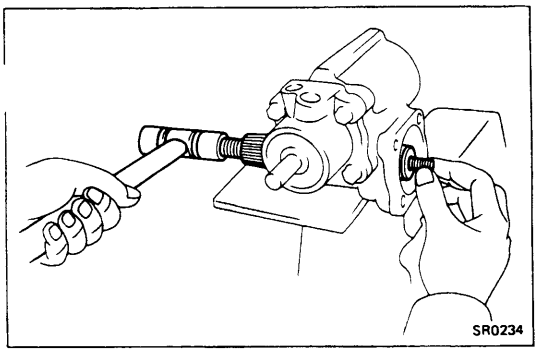

3. REMOVE CROSS SHAFT

Using a plastic hammer, tap on the cross shaft end and pull out the shaft.

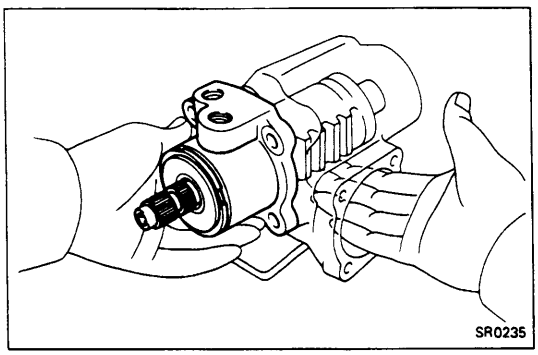

4. REMOVE WORM GEAR VALVE BODY ASSEMBLY

(a) Remove the four cap screws from the housing.

(b) Hold the power piston nut with your finger so it cannot move, and turn the worm shaft clockwise. Then, with draw the valve body and power piston assembly.

CAUTION: Ensure that the power piston nut does not come off the worm shaft.

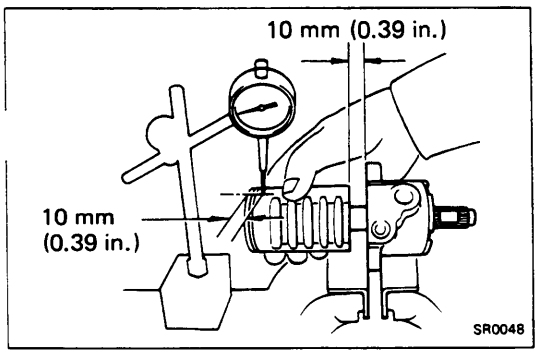

INSPECTION AND REPAIR OF STEERING GEAR HOUSING

1. CHECK BALL CLEARANCE

(a) Mount the valve body in a vise.

(b) Using a dial indicator, check the ball clearance. Move the worm gear up and down.

Maximum ball clearance: 0.15 mm (0.0059 in.)

If clearance is excessive, the power control valve assembly must be replaced.

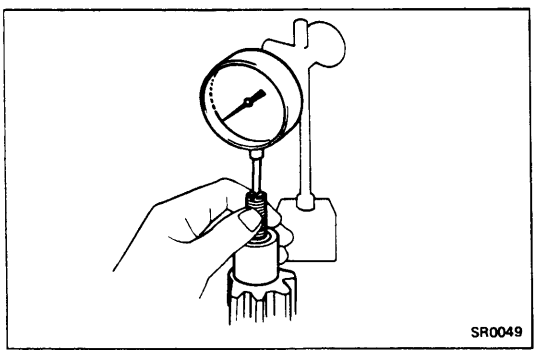

2. CHECK CROSS SHAFT ADJUSTING SCREW END PLAY

(a) Clamp the cross shaft in a vise.

(b) Using a dial indicator, check the end play.

End play: 0.03 — 0.05 mm (0.0012 — 0.0020 in.)

If end play is not correct, see step 4 to adjust the end play.

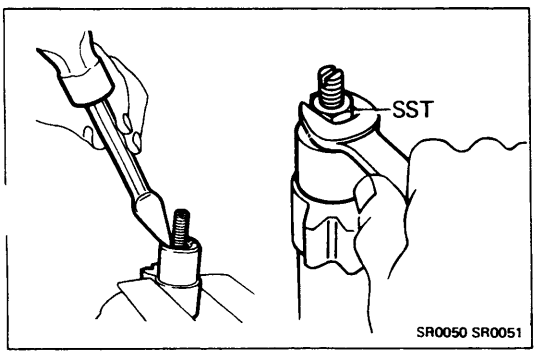

3. IF NECESSARY, ADJUST END PLAY

(a) Using a chisel and hammer, remove the lock nut stake.

(b) Using SST, loosen the lock nut.

SST 09630-00011

(c) Adjust the adjusting screw for correct end play and tighten the lock nut.

(d) Stake the lock nut.

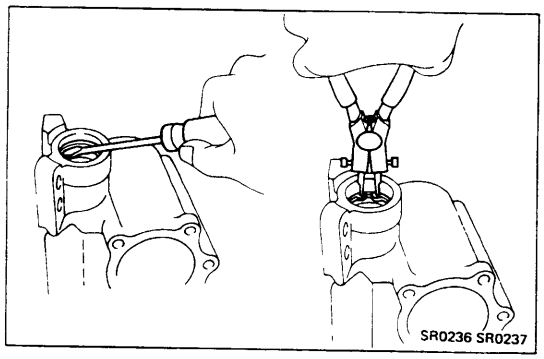

4. REPLACE TEFLON RING AND NEEDLE ROLLER BEARING

(a) Pry out the oil seal from the pitman arm end of the housing.

(b) Using snap ring pliers, remove the snap ring.

(c) Remove the metal spacer, teflon seal and O-ring.

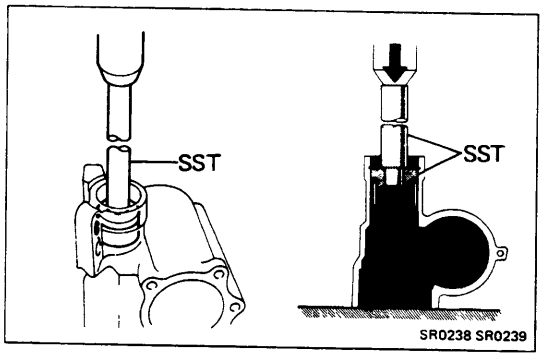

(d) Using SST, drive out the bearing.

SST 09630-00011

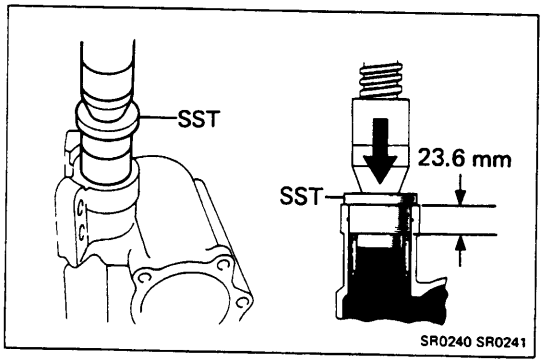

(e) Using SST, install a new bearing so that it is positioned 23.6 mm (0.929 in.) away from the housing inner end surface.

SST 09631-60010

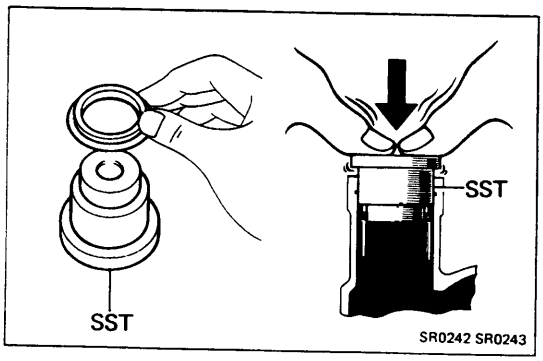

(f) Install a new teflon ring together with a new O-ring to SST.

SST 09631-60010

(g) Install the teflon ring and O-ring to the gear housing with the SST.

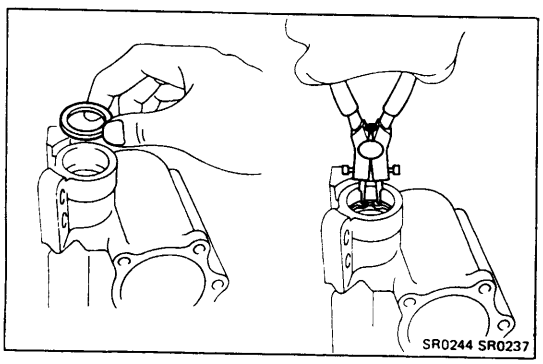

(h) Install the metal spacer.

(i) Using snap ring pliers, install the snap ring.

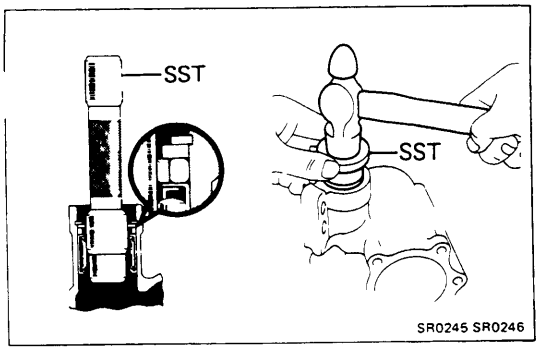

(j) Using SST, form the seal.

SST 09630-00011

(k) Using SST, drive the oil seal into the gear housing.

SST 09631-60010

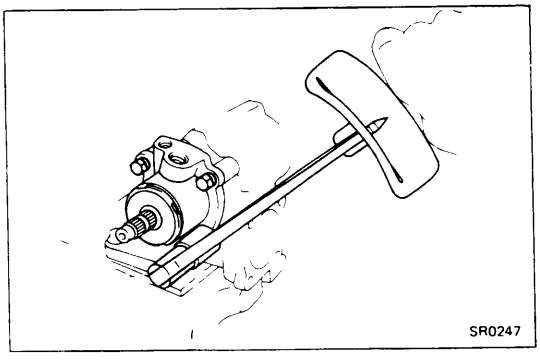

ASSEMBLY OF GEAR HOUSING

(See page SR-62)

1. INSTALL WORM GEAR VALVE BODY

(a) Install two new O-rings.

(b) Insert the valve body into the housing.

(c) Torque the cap screws in a diagonal pattern.

Torque: 470 kg-cm (34 ft-lb, 46 N·m)

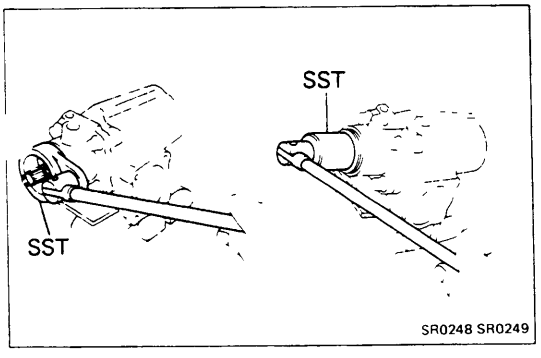

2. INSPECT WORM SHAFT BEARING

NOTE: If a new worm gear valve body is being installed, skip this procedure.

(a) Using SST, remove the lock nut.

SST 09630-00011

(b) Using SST, remove the bearing cap.

SST 09630-00011

(c) Remove the worm bearing and O-ring.

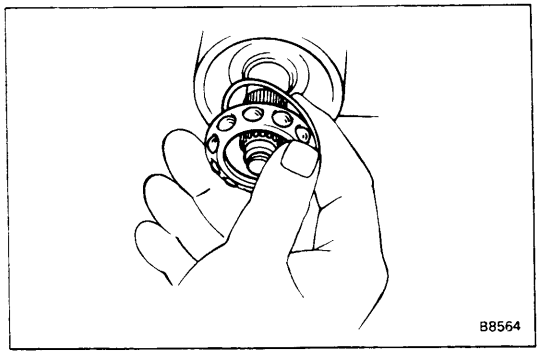

(d) Install a new O-ring and bearing cap.

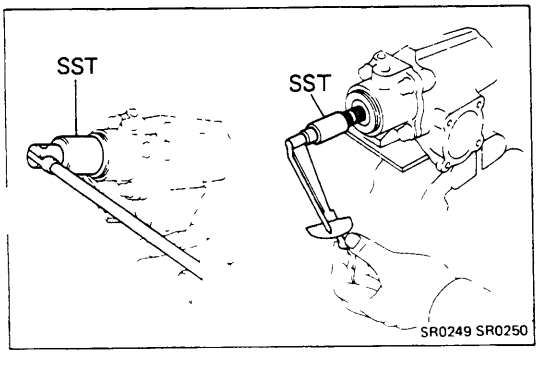

3. ADJUST WORM BEARING PRELOAD

(a) Using SST, tighten the bearing cap until the preload is correct.

SST 09630-00011

(b) Using SST and torque wrench, check the preload of the bearing.

SST 09616-00010

Preload: 4.0 – 6.5 kg-cm
(3.5 – 5.6 in.-lb, 0.4 – 0.6 N·m)

NOTE: Hold the power piston nut to prevent it from turning.

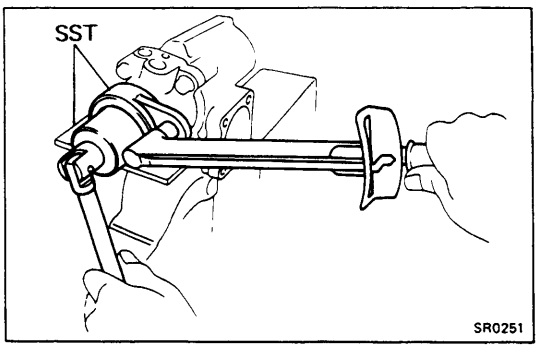

(c) Using SST, tighten the lock nut while holding the bearing cap with SST.

SST 09630-00011

Torque: 500 kg-cm (36 ft-lb, 49 N·m)

(d) Recheck the preload.

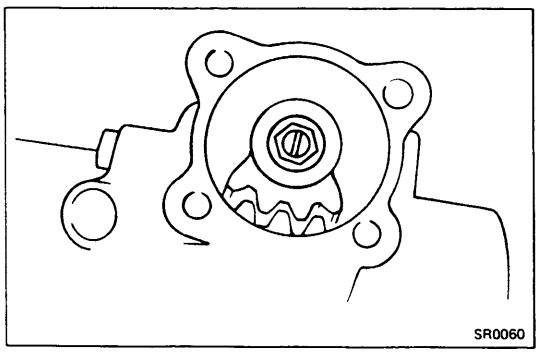

4. INSTALL CROSS SHAFT AND END COVER

(a) Install a new O-ring on the end cover.

(b) Assemble the cross shaft to the end cover.

NOTE: Fully loosen the adjusting screw.

(c) Set the worm gear at the center of the gear housing.

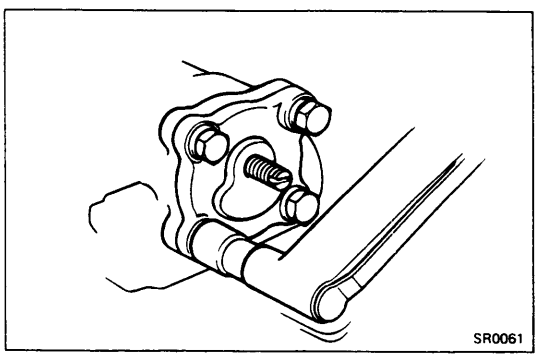

(d) Insert and push the cross shaft into the gear housing so that the center teeth mesh together.

(e) Install the four cap bolts. Torque the bolts in a diagonal pattern.

Torque: 470 kg-cm (34 ft-lb, 46 N·m)

5. DETERMINE CENTER POSITION OF GEAR BOX

Turn the worm shaft to full lock in both directions and determine the exact center.

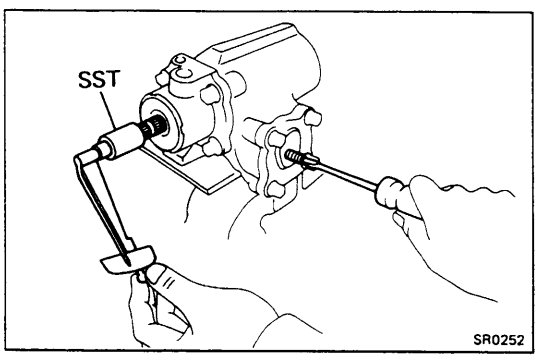

6. ADJUST TOTAL PRELOAD

(a) Install SST with a torque wrench on the center worm shaft.

SST 09616-00010

(b) Turn the adjusting screw while measuring the preload until it is correct.

Total preload:

Add worm shaft preload

2 — 3 kg-cm (1.7 — 2.6 in.-lb, 0.2 — 0.3 N·m)

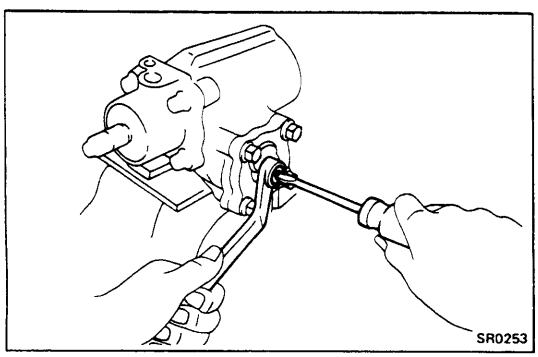

7. INSTALL NEW WASHER

8. INSTALL AND TIGHTEN LOCK NUT

Torque the lock nut while holding the adjusting screw.

Torque: 470 kg-cm (34 ft-lb, 46 N·m)

9. RECHECK TOTAL PRELOAD

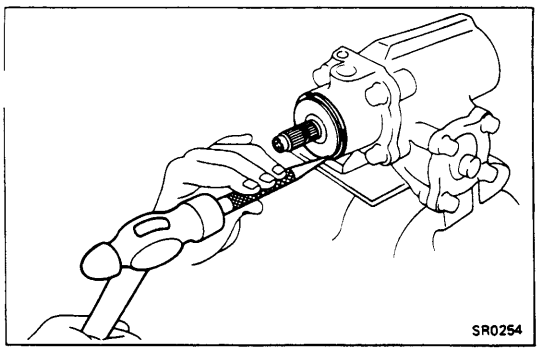

10. STAKE LOCK NUT

Using a punch and hammer, stake the lock nut at three places.

INSTALLATION OF GEAR HOUSING

(See page SR-61)

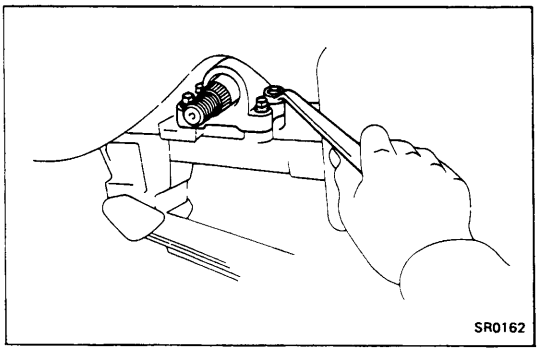

1. INSTALL GEAR HOUSING

(a) Line up the marks on the coupling and worm shaft.

(b) Torque the four mounting bolts.

Torque: 575 kg-cm (42 ft-lb, 56 N·m)

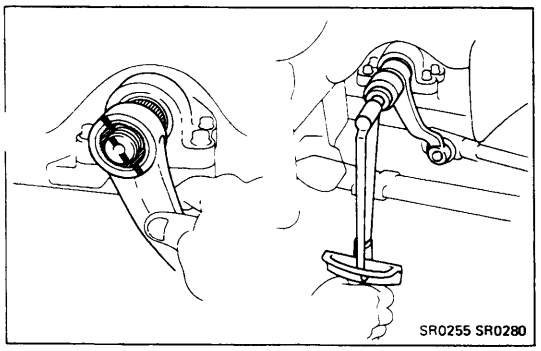

2. CONNECT PITMAN ARM

(a) Align the marks on the pitman arm and cross shaft.

(b) Torque the pitman arm nut.

Torque: 1,750 kg-cm (127 ft-lb, 172 N·m)

3. TORQUE COUPLING MOUNT BOLT

(a) Torque the coupling mount bolt.

Torque: 400 kg-cm (29 ft-lb, 39 N·m)

(b) Install the stone shield to the gear housing.

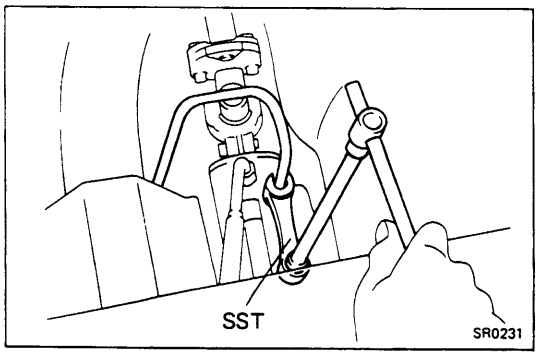

4. CONNECT RETURN LINE AND PRESSURE LINE

(a) Using SST, install and torque the union nuts.

Torque: 450 kg-cm (33 ft-lb, 44 N·m)

SST 09631-22020

NOTE: Be sure the hose is not touching the fender.

(b) Install the pressure and return line clamp bolts.

5. INSTALL ENGINE UNDER COVER

6. INSTALL BATTERY

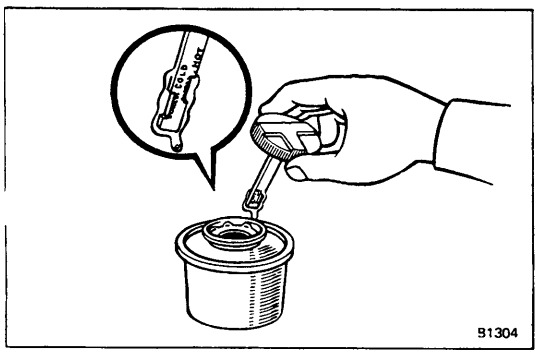

7. FILL RESERVOIR WITH FLUID

Fluid: ATF DEXRON or DEXRON II

8. BLEED SYSTEM AND PERFORM PRESSURE CHECK

(See page SR-41)

STEERING LINKAGE (2WD)

COMPONENTS

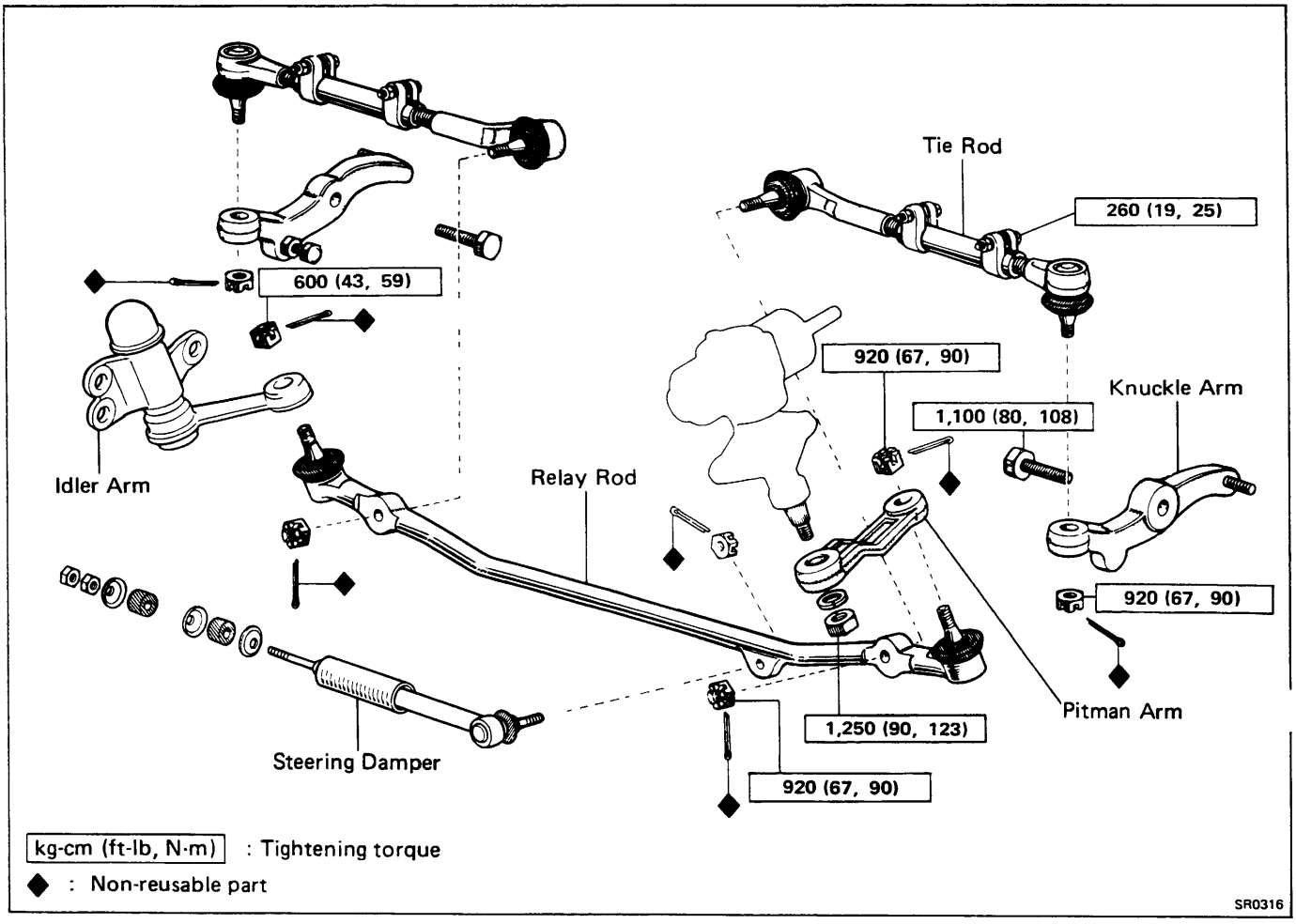

NOTE:

- Before connecting the ball stud to the arm or rod, remove the grease on the joint surfaces.
- After torquing the ball stud nut to specified torque, advance the nut just enough to insert the cotter pin. Secure the nut.
- After installing any of the steering linkage components, check the front wheel alignment and side slip. (See page FA-3)

Pitman Arm

REMOVAL AND INSPECTION OF PITMAN ARM

1. **REMOVE STRUT BAR**
   (See page FA-22)

2. **LOOSEN PITMAN ARM NUT**

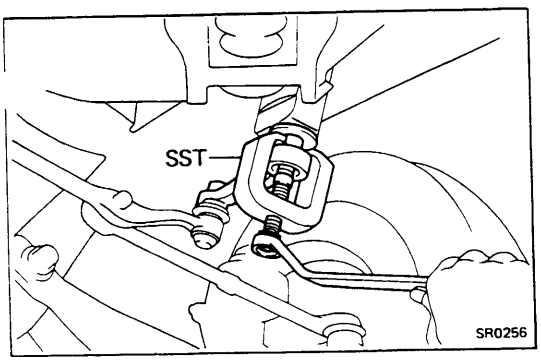

3. **DISCONNECT PITMAN ARM FROM SECTOR SHAFT**

Using SST, disconnect the pitman arm from the sector shaft.

SST 09610-55012

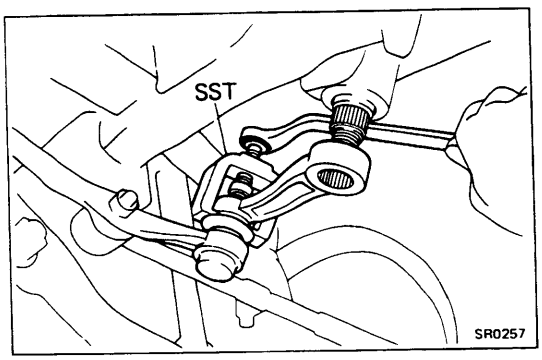

4. **DISCONNECT PITMAN ARM FROM RELAY ROD**

Using SST, disconnect the pitman arm from the relay rod.

SST 09611-22012

5. **INSPECT ARM FOR WEAR, DAMAGE OR CRACKS**

INSTALLATION OF PITMAN ARM

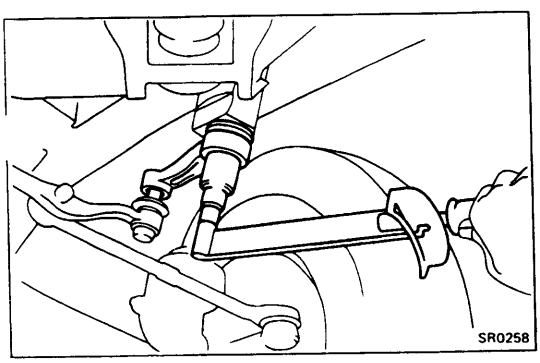

1. **CONNECT PITMAN ARM TO SECTOR SHAFT**

(a) Align marks on the pitman arm and the sector shaft.

(b) Torque the pitman arm nut.

Torque: 1,250 kg-cm (90 ft-lb, 123 N·m)

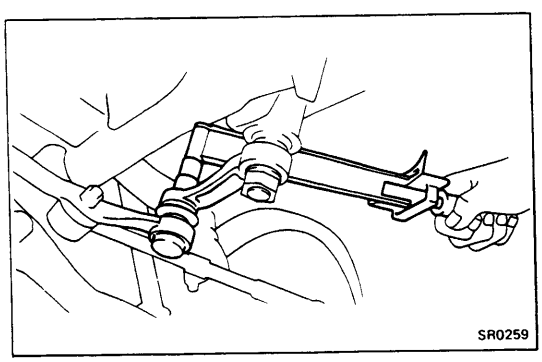

2. **CONNECT PITMAN ARM TO RELAY ROD**

Torque the mounting nut.

Torque: 920 kg-cm (67 ft-lb, 90 N·m)

3. **INSTALL STRUT BAR**
(See page FA-22)

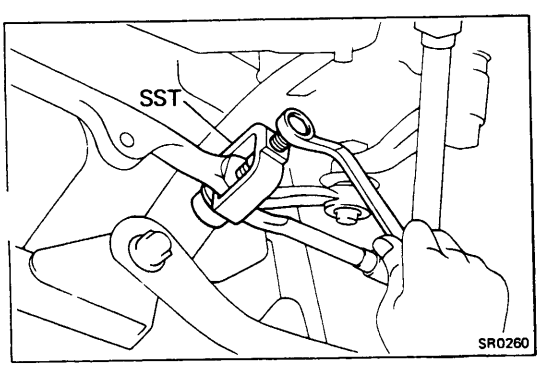

Tie Rod

REMOVAL AND INSPECTION OF TIE ROD

(See page SR-68)

1. **DISCONNECT TIE ROD FROM RELAY ROD AND KNUCKLE ARM**

Using SST, disconnect the tie rod from the relay rod and knuckle arm.

SST 09611-22012

2. **INSPECT TIE ROD FOR WEAR, DAMAGE OR CRACKS**
Check for cracks with flaw detecting penetrant.

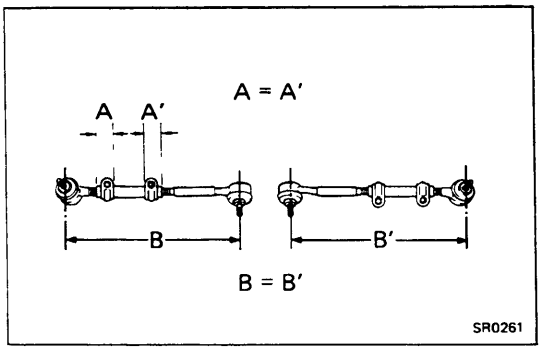

INSTALLATION OF TIE ROD

1. **ASSEMBLE TIE ROD**
Screw the tie rod ends into the tie rod.
The tie rod length should be approximately 314.5 mm (12.382 in.), and the remaining length of threads on both tie rod ends should be equal.

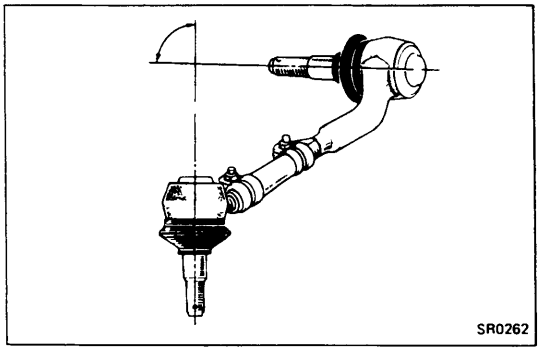

2. **ADJUST TIE ROD END ANGLE**
(a) Turn the tie rods so they cross at about 90 degrees.
(b) Tighten the tie rod clamps to lock the tie rod ends in position.
Torque: 260 kg-cm (19 ft-lb, 25 N·m)

3. **CONNECT TIE ROD TO RELAY ROD AND KNUCKLE ARM**
Torque the mounting nuts.
Torque: 920 kg-cm (67 ft-lb, 90 N·m)

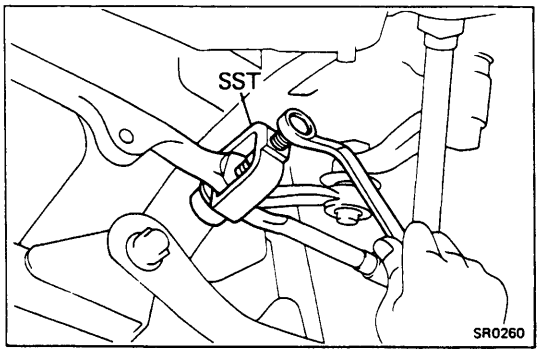

Relay Rod

REMOVAL AND INSPECTION OF RELAY ROD

(See page SR-68)

1. **DISCONNECT TIE ROD ENDS FROM RELAY ROD**
Using SST, disconnect the tie rod ends from the relay rod.
SST 09611-22012

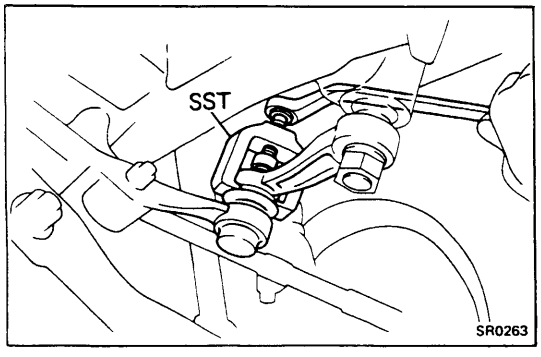

2. **DISCONNECT RELAY ROD FROM PITMAN ARM AND IDLER ARM**
Using SST, disconnect and remove the relay rod.
SST 09611-22012

3. **INSPECT RELAY ROD FOR DAMAGE OR CRACKS**
Check for cracks with flaw detecting penetrant.

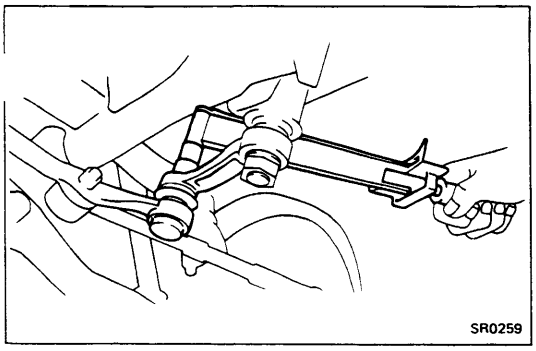

INSTALLATION OF RELAY ROD

1. **CONNECT RELAY ROD TO IDLER ARM**
   Torque the mount nut.
   Torque: 600 kg-cm (43 ft-lb, 59 N·m)
2. **CONNECT RELAY ROD TO PITMAN ARM**
   Torque the mount nut.
   Torque: 920 kg-cm (67 ft-lb, 90 N·m)

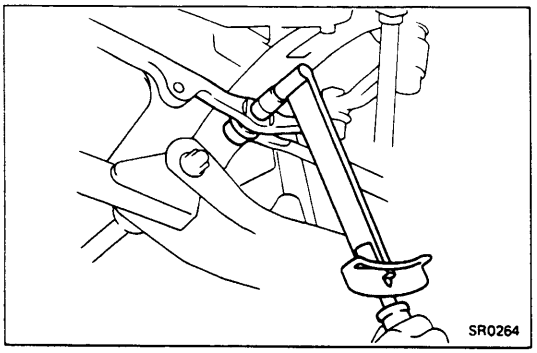

3. **CONNECT RELAY ROD TO TIE ROD ENDS**
   Torque the mount nuts.
   Torque: 920 kg-cm (67 ft-lb, 90 N·m)

Knuckle Arm

REMOVAL AND INSPECTION OF KNUCKLE ARM

(See page SR-68)

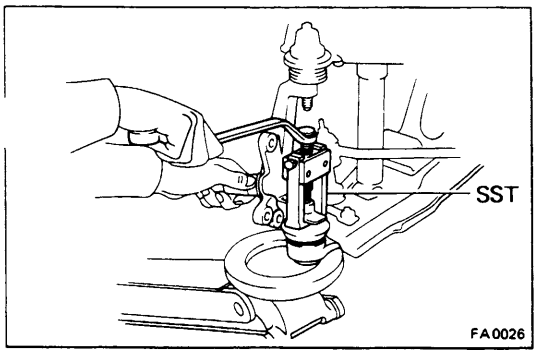

1. **REMOVE FRONT AXLE HUB**
   (See page FA-7)
2. **DISCONNECT TIE ROD FROM KNUCKLE ARM**
   Using SST, disconnect the tie rod from the knuckle arm.
   SST 09628-62011
3. **REMOVE KNUCKLE ARM**
4. **INSPECT KNUCKLE ARM FOR DAMAGE OR CRACKS**
   Check for cracks with flaw detecting penetrant.

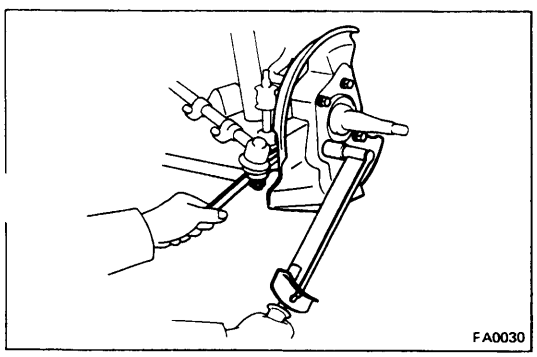

INSTALLATION OF KNUCKLE ARM

1. **INSTALL KNUCKLE ARM TO STEERING KNUCKLE**
   Torque: 1,100 kg-cm (80 ft-lb, 108 N·m)
2. **CONNECT TIE ROD TO KNUCKLE ARM**
   Torque the nuts.
   Torque: 920 kg-cm (67 ft-lb, 90 N·m)
3. **INSTALL FRONT AXLE HUB**
   (See page FA-8)

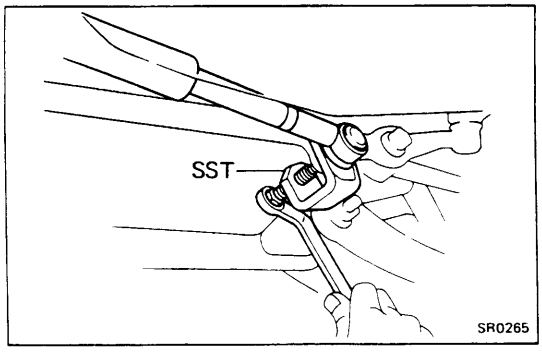

Steering Damper

REMOVAL AND INSPECTION OF STEERING DAMPER

(See page SR-68)

1. DISCONNECT STEERING DAMPER FROM RELAY ROD

Using SST, disconnect the steering damper from the relay rod.

SST 09611-12010

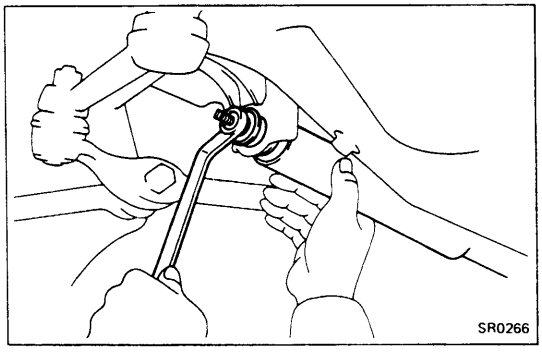

2. REMOVE STEERING DAMPER

Remove the nut, washers, cushions and the steering damper.

3. INSPECT STEERING DAMPER FOR DAMAGE OR OIL LEAKAGE

INSTALLATION OF STEERING DAMPER

1. INSTALL STEERING DAMPER

(a) Install the cushions and washers, and torque the mount nut.

Torque: 130 kg-cm (9 ft-lb, 13 N·m)

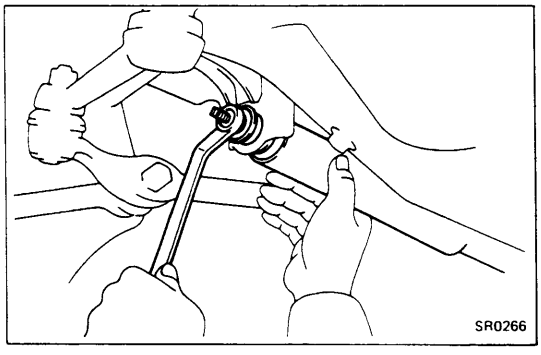

(b) Connect the steering damper to the tie rod, and torque the mount nut.

Torque: 600 kg-cm (43 ft-lb, 59 N·m)

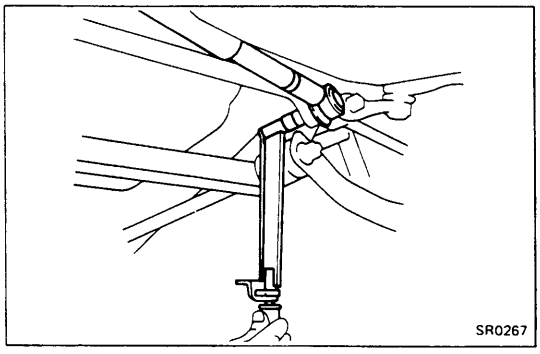

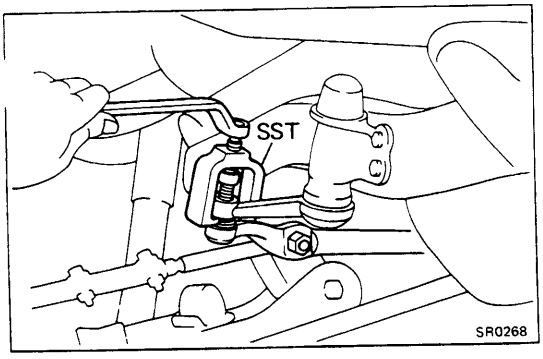

Idler Arm Bracket

REMOVAL OF IDLER ARM BRACKET

(See page SR-68)

1. **DISCONNECT RELAY ROD FROM IDLER ARM**

   Using SST, disconnect the relay rod from the idler arm.

   SST 09611-22012

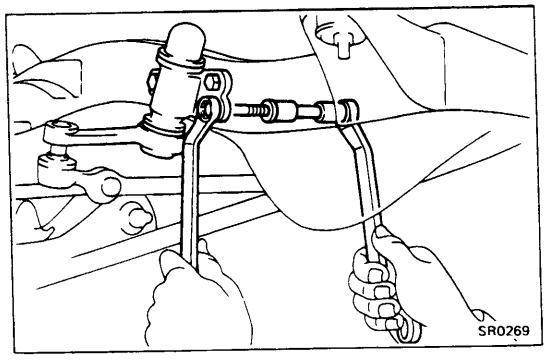

2. **REMOVE IDLER ARM BRACKET**

   Remove the three bolts and nuts.

DISASSEMBLY OF IDLER ARM BRACKET

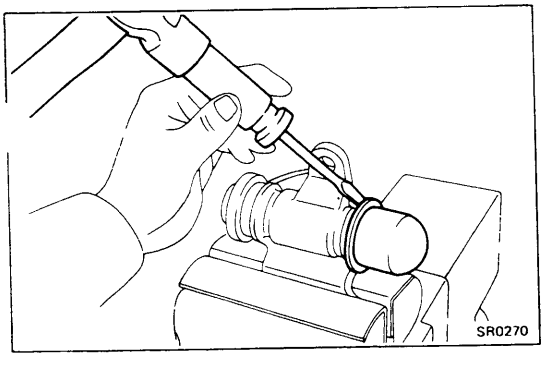

1. **REMOVE IDLER ARM BRACKET CAP**

   Using a screwdriver and hammer, remove the idler arm bracket cap.

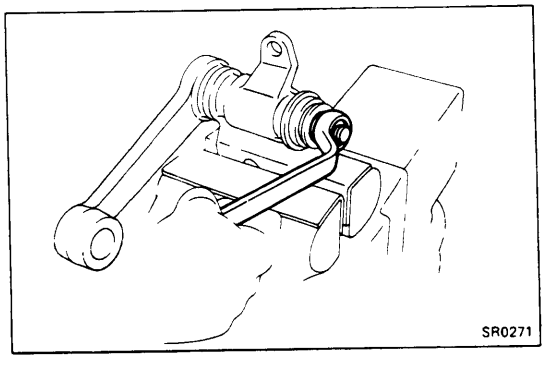

2. **REMOVE IDLER ARM WITH SHAFT**

   Remove the nut and pull the idler arm with the shaft off the idler arm bracket.

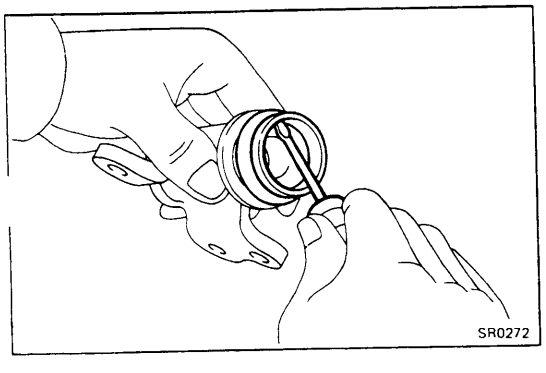

3. **REMOVE OIL SEAL AND BUSHINGS**

   Using a screwdriver, remove the oil seal and the two bushings.

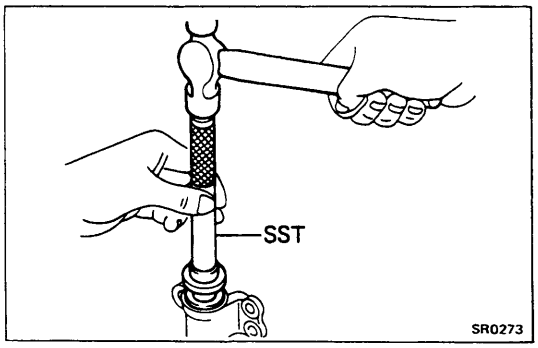

ASSEMBLY OF IDLER ARM BRACKET

1. **INSTALL BUSHING AND OIL SEAL**
   (a) Using SST, install new bushings to the idler arm bracket.
   SST 09620-30010
   (b) Using a screwdriver, install a new oil seal.

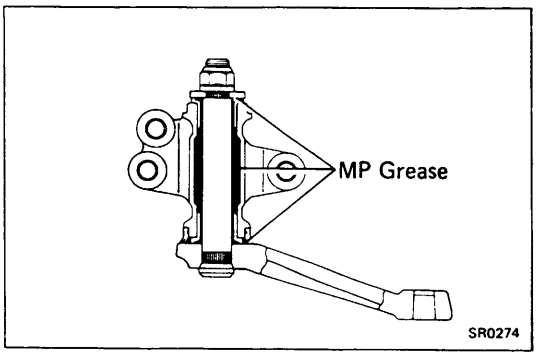

2. **APPLY MP GREASE**

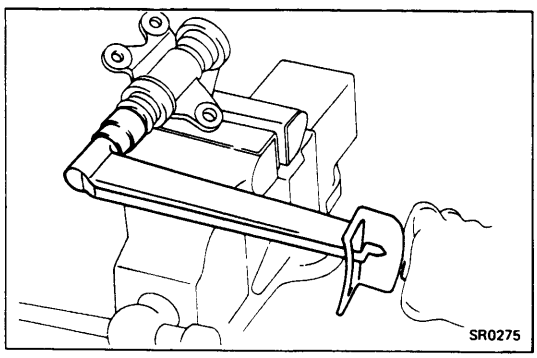

3. **INSTALL IDLER ARM WITH SHAFT**
   (a) Insert the idler arm shaft to the bracket.
   (b) Install the washer and nut.
   Torque: 800 kg-cm (58 ft-lb, 78 N·m)

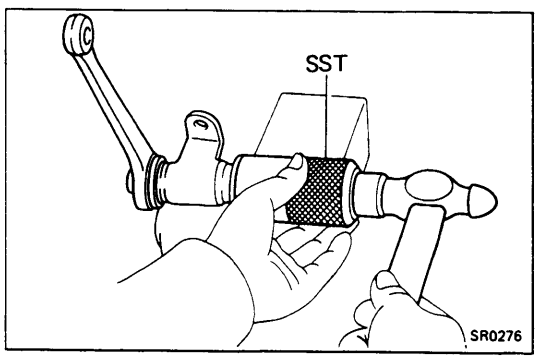

4. **INSTALL IDLER ARM BRACKET CAP**
   (a) Apply liquid sealer to the cap end.
   (b) Using SST, install the idler arm bracket cap.
   SST 09636-20010

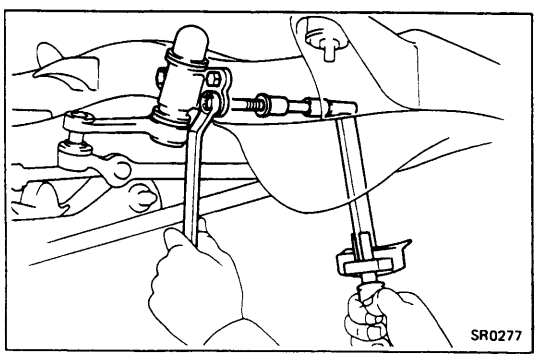

INSTALLATION OF IDLER ARM BRACKET

(See page SR-68)

1. **INSTALL IDLER ARM BRACKET**
   Torque the three bolts and nuts.
   Torque: 660 kg-cm (48 ft-lb, 65 N·m)

2. **CONNECT IDLER ARM TO RELAY ROD**
   Torque the mount nut.
   Torque: 600 kg-cm (43 ft-lb, 59 N·m)

STEERING LINKAGE (4WD)

COMPONENTS

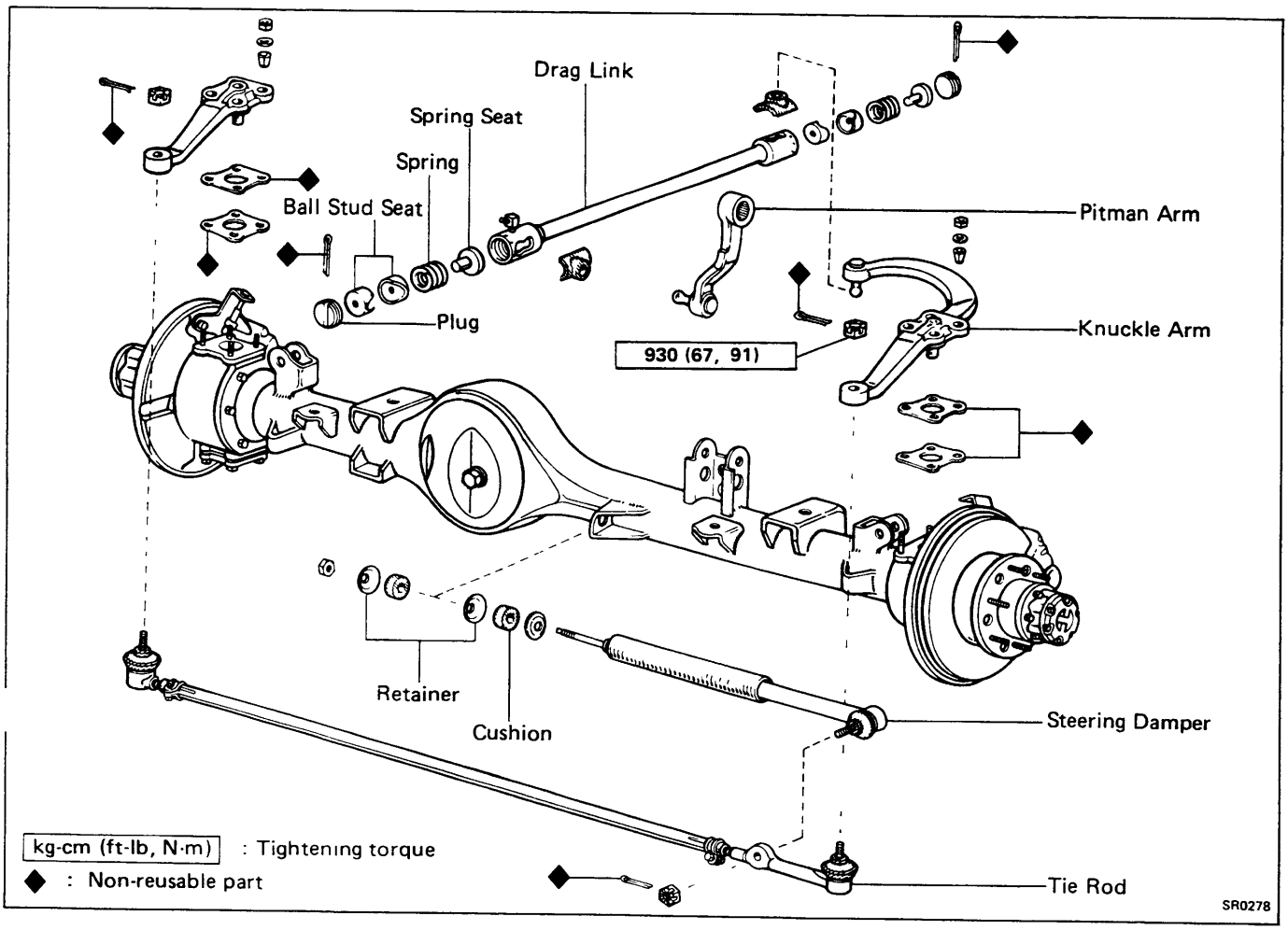

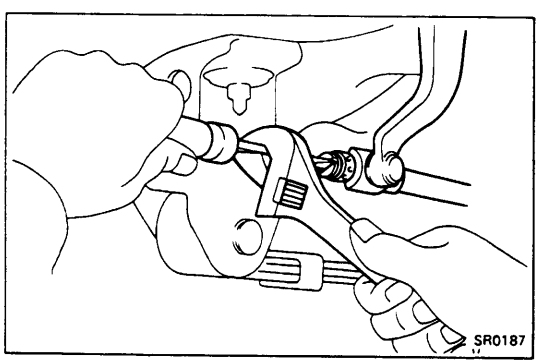

Pitman Arm

REMOVAL AND INSPECTION OF PITMAN ARM

1. **DISCONNECT PITMAN ARM FROM DRAG LINK**
   (a) Remove the cotter pin and plug.
   (b) Disconnect the pitman arm from the drag link.

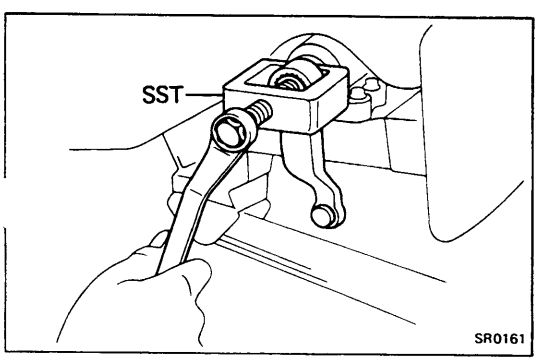

2. **DISCONNECT PITMAN ARM FROM SECTOR SHAFT**
   (a) Loosen the pitman arm nut.
   (b) Using SST, disconnect the pitman arm from the sector shaft.
   SST 09610-55012

3. **INSPECT PITMAN ARM FOR WEAR, DAMAGE OR CRACKS**

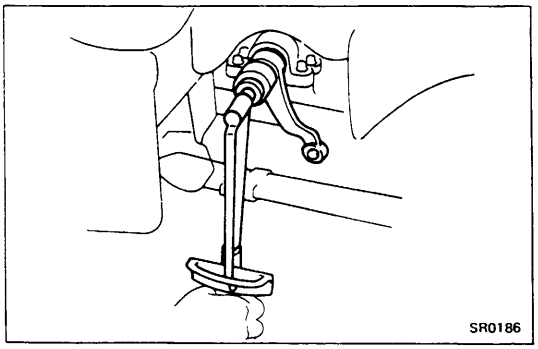

INSTALLATION OF PITMAN ARM

(See page SR-75)

1. **CONNECT PITMAN ARM TO SECTOR SHAFT**
   (a) Align the marks on the pitman arm and the sector shaft.
   (b) Torque the pitman arm bolt.
   Torque: 1,750 kg-cm (127 ft-lb, 172 N·m)

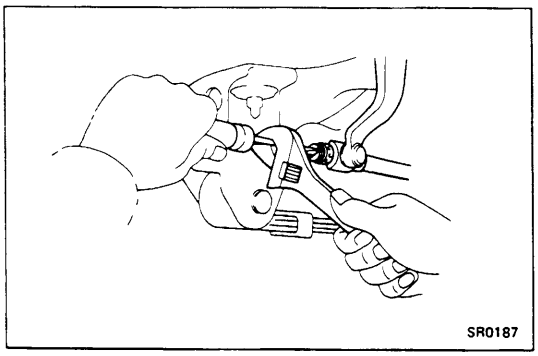

2. **CONNECT PITMAN ARM TO DRAG LINK**
   (a) Insert the spring seat, spring and ball stud seat into the drag link.
   (b) Install the drag link with dust seal to the pitman arm.
   (c) Insert the ball stud seat and plug, and tighten the plug completely.
   (d) Loosen the plug 1-1/3 turns and install the cotter pin.

Tie Rod

REMOVAL AND INSPECTION OF TIE ROD

(See page SR-75)

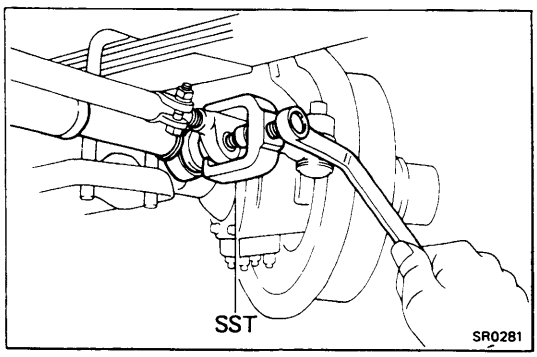

1. **DISCONNECT STEERING DAMPER FROM TIE ROD**
   Using SST, disconnect the steering damper from the tie rod.
   SST 09611-22012

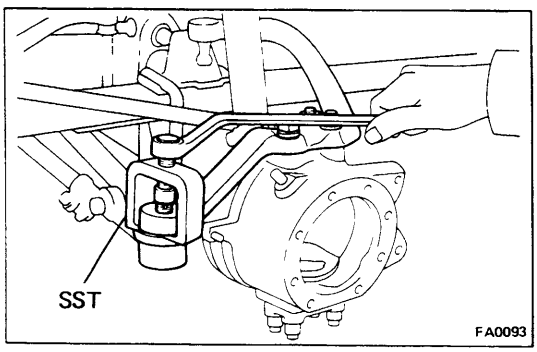

2. **DISCONNECT TIE ROD FROM KNUCKLE ARM**
   Using SST, disconnect the tie rod from the knuckle arm.
   SST 09611-22012

3. **INSPECT TIE ROD FOR WEAR, DAMAGE OR CRACKS**

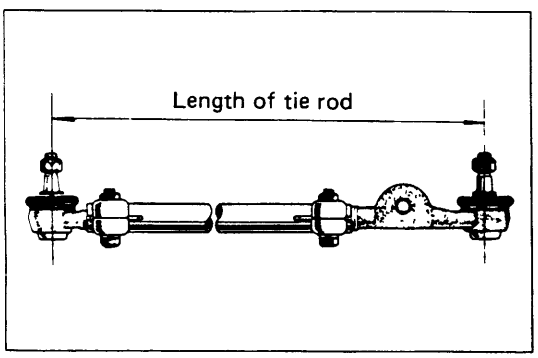

INSTALLATION OF TIE ROD

1. **ASSEMBLE AND ADJUST TIE ROD TO SPECIFIED LENGTH**
   Turn the tie rod ends equal amounts into the tie rod tube.
   Tie rods should be approximately 120 cm (47.24 in.).

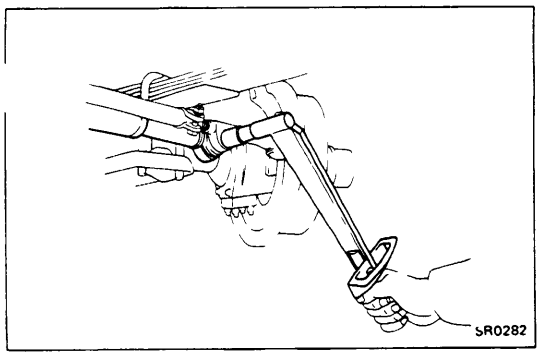

2. **CONNECT TIE ROD TO KNUCKLE ARM**

Torque the bolts.

Torque: 930 kg-cm (67 ft-lb, 91 N·m)

3. **CONNECT STEERING DAMPER TO TIE ROD**

Torque the bolt.

Torque: 600 kg-cm (43ft-lb, 59 N·m)

4. **ADJUST TOE-IN (See page FA-26)**

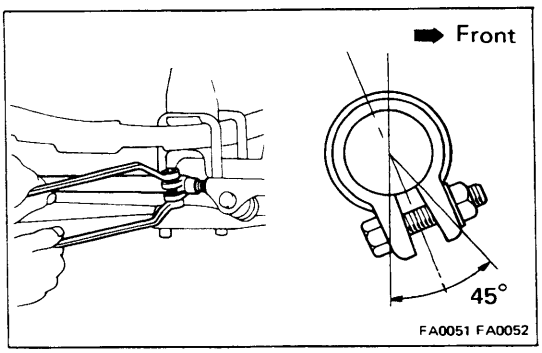

5. **TIGHTEN CLAMP BOLTS**

Torque the clamp bolts.

Torque: 375 kg-cm (27 ft-lb,37 N·m)

NOTE: The steering damper side clamp opening must be positioned at the front of the tie rod and face within 45° from straight down as shown in the figure.

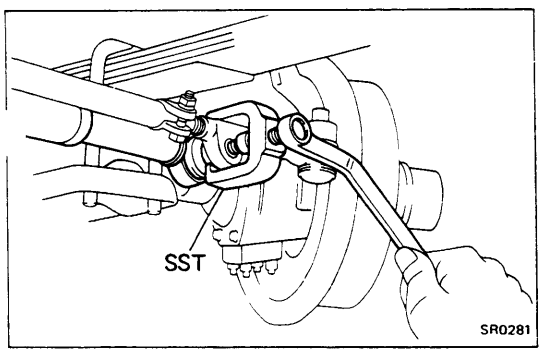

Steering Damper

REMOVAL AND INSPECTION OF STEERING DAMPER

(See page SR-75)

1. **DISCONNECT STEERING DAMPER FROM TIE ROD**

Using SST, disconnect the steering damper from the tie rod.

SST 09611-22012

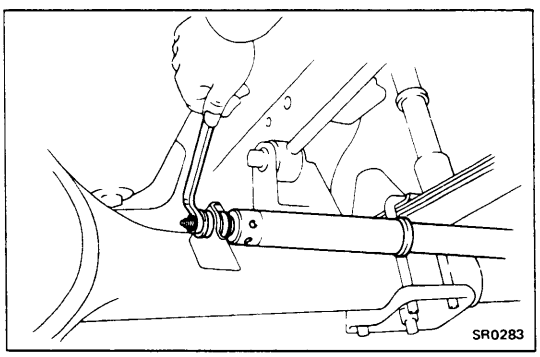

2. **REMOVE STEERING DAMPER**

Remove the nut, retainers, cushions and the steering damper.

3. **INSPECT STEERING DAMPER FOR DAMAGE OR OIL LEAKAGE**

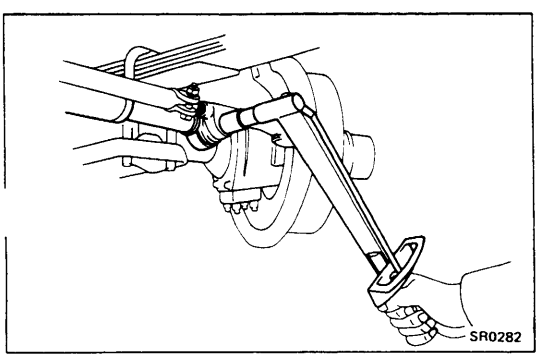

INSTALLATION OF STEERING DAMPER

1. **INSTALL STEERING DAMPER**

(a) Install the cushions and retainers, and torque the nut.

Torque: 130 kg-cm (9 ft-lb, 13 N·m)

(b) Connect the steering damper to the tie rod, and torque the nut.

Torque: 600 kg-cm (43 ft-lb, 59 N·m)

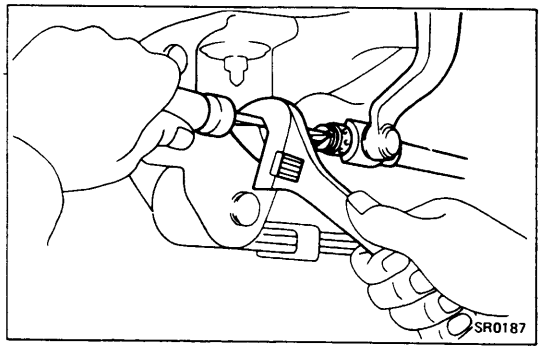

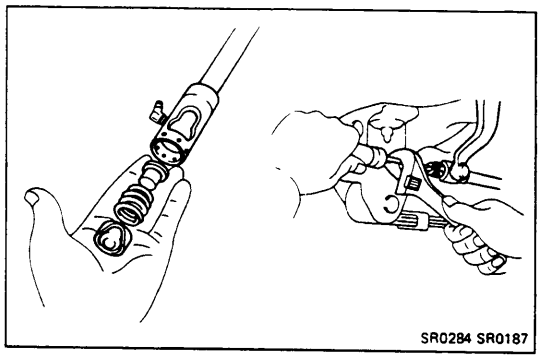

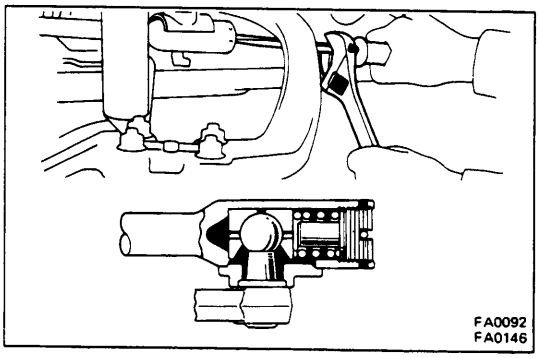

Drag Link

REMOVAL AND INSPECTION OF DRAG LINK

(See page SR-75)

1. **DISCONNECT DRAG LINK FROM PITMAN ARM AND KNUCKLE ARM**
   (a) Using a screwdriver, remove the two cotter pins and plugs on both sides.
   (b) Remove the drag link.
2. **INSPECT PARTS FOR WEAR OR DAMAGE**

INSTALLATION OF DRAG LINK

1. **CONNECT DRAG LINK TO PITMAN ARM**
   (a) Insert the spring seat, spring and ball stud seat into the drag link.
   (b) Install the drag link with dust seal to the pitman arm.
   (c) Insert the ball stud seat and plug, and tighten the plug completely.
   (d) Loosen the plug 1-1/3 turns and install the cotter pin.
2. **CONNECT DRAG LINK TO KNUCKLE ARM**
   (a) Insert the ball stud seat into the drag link.
   (b) Install the drag link with dust seal to the knuckle arm.
   (c) Insert the ball stud seat, spring, spring seat and plug, and tighten the plug completely.
   (d) Loosen the plug 1-1/3 turns and install the cotter pin.
3. **APPLY MOLYBDENUM DISULPHIDE LITHIUM BASE GREASE TO BOTH NIPPLES**

Knuckle Arm

(See page FA-48)

BODY ELECTRICAL SYSTEM

	Page
PRECAUTIONS	BE-2
LOCATION OF SWITCHES AND RELAYS	BE-5
SWITCHES	BE-9
LIGHTING	BE-13
WIPERS AND WASHERS	BE-17
INSTRUMENTS AND SENDER GAUGES	BE-21
REAR WINDOW DEFOGGER	BE-30
HEATER	BE-32
CRUISE CONTROL SYSTEM	BE-36
POWER WINDOW	BE-53
BACK DOOR POWER WINDOW	BE-55
RADIO, STEREO TAPE PLAYER AND MOTOR ANTENNA	BE-60
CLOCK	BE-69

PRECAUTIONS

WIRING COLOR CODE

Wire colors are indicated by an alphabetical code. The 1st letter indicates the basic wire color and the 2nd indicates the stripe color.

B = Black	BR = Brown
G = Green	GR = Grey
L = Light Blue	LG = Light Green
O = Orange	P = Pink
R = Red	V = Violet
W = White	Y = Yellow

Example: R-G indicates a red wire with a green stripe.

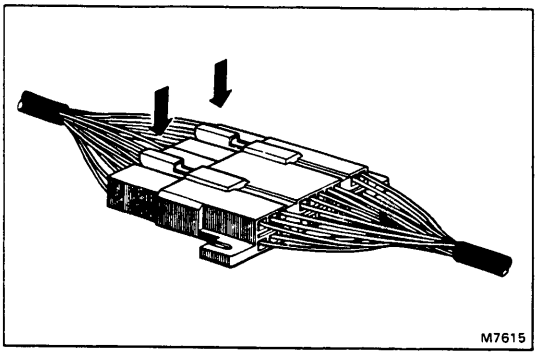

HANDLING AND INSPECTION OF BULKHEAD TYPE CONNECTOR

DISCONNECT BULKHEAD TYPE CONNECTOR

To remove the connector, push the lock levers, shown ... the figure, and pull out.

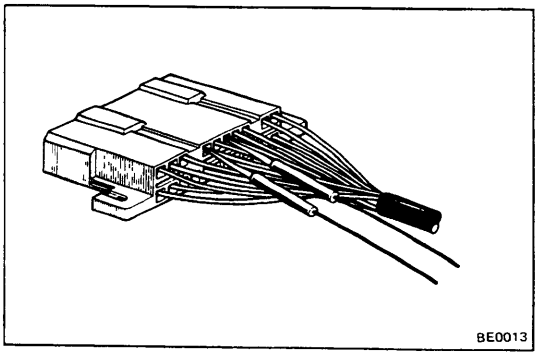

INSPECT BULKHEAD TYPE CONNECTOR

When checking the continuity or voltage with a circuit tester, insertion of the test probe into the receptacle connector may open the fitting to the connector and result in poor contact.

Therefore, ensure that the test probe is inserted only from the wire harness side as shown in the figure.

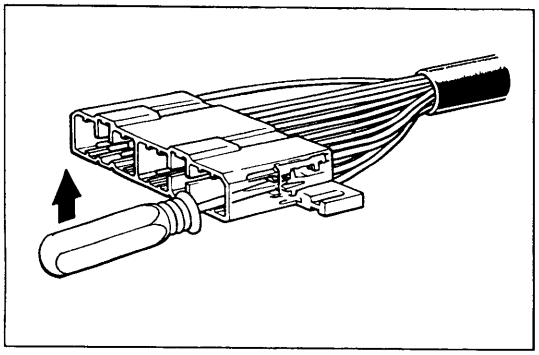

REPLACEMENT OF TERMINAL

REMOVE TERMINALS FROM BULKHEAD CONNECTOR

(a) From the open end, insert a miniature screwdriver between the locking lug and terminal.

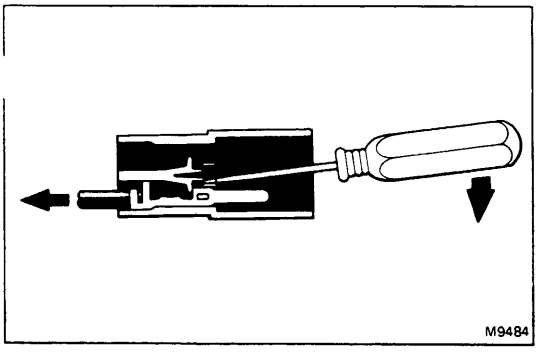

(b) Pry up the locking lug with the screwdriver and pull the terminal out from the rear.

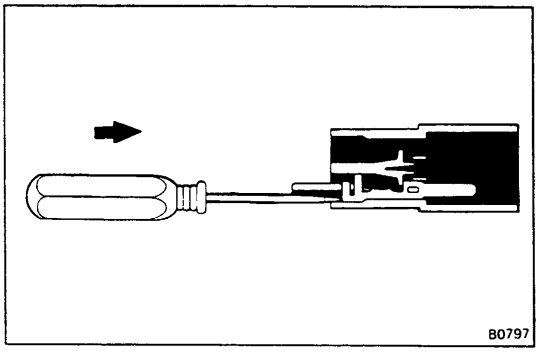

INSTALL TERMINALS TO BULKHEAD CONNECTOR

(a) Push in the terminal until it is securely locked in the connector lug.

(b) Pull on the wire to confirm that it is securely locked.

INSPECTION OF CIRCUIT AND CONNECTOR

INSPECT CIRCUIT

When inspecting the circuit, refer to the diagram at the back of the manual.

INSPECT CONNECTOR

All connectors are shown from the component side. Therefore, when inspecting from the body side, the left and right terminal connections will be in reverse.

REPLACEMENT OF FUSE

Install a new fuse with the correct amperage.

CAUTION:

1. **Turn off all electrical components and the ignition switch before replacing a fuse. Do not exceed the fuse amp rating.**
2. **Always use a fuse puller for removing and inserting a fuse. Remove and insert straight in and out without twisting. Twisting could force open the terminals too much, resulting in a bad connection.**

If a fuse continues to blow, a short circuit is indicated. The system must be checked by a qualified technician.

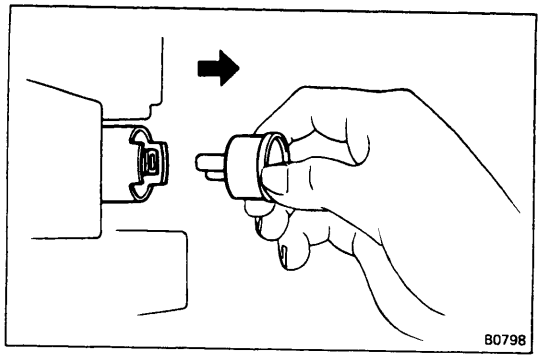

RESET OF CIRCUIT BREAKER

1. REMOVE CIRCUIT BREAKER

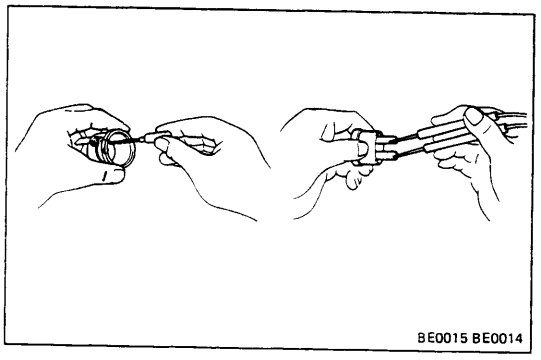

2. RESET CIRCUIT BREAKER

(a) Insert the needle into the reset hole and push it in.

(b) Using an ohmmeter, check that there is continuity between both terminals of the circuit breaker.

If there is no continuity, replace the circuit breaker.

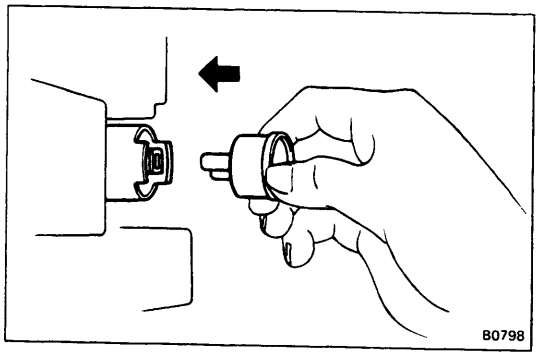

3. INSTALL CIRCUIT BREAKER

Install the circuit breaker.

NOTE: If the circuit breaker continues to cut out, a short circuit is indicated. The system must be checked by a qualified technician.

LOCATION OF SWITCHES AND RELAYS

ENGINE COMPARTMENT SWITCHES AND RELAYS

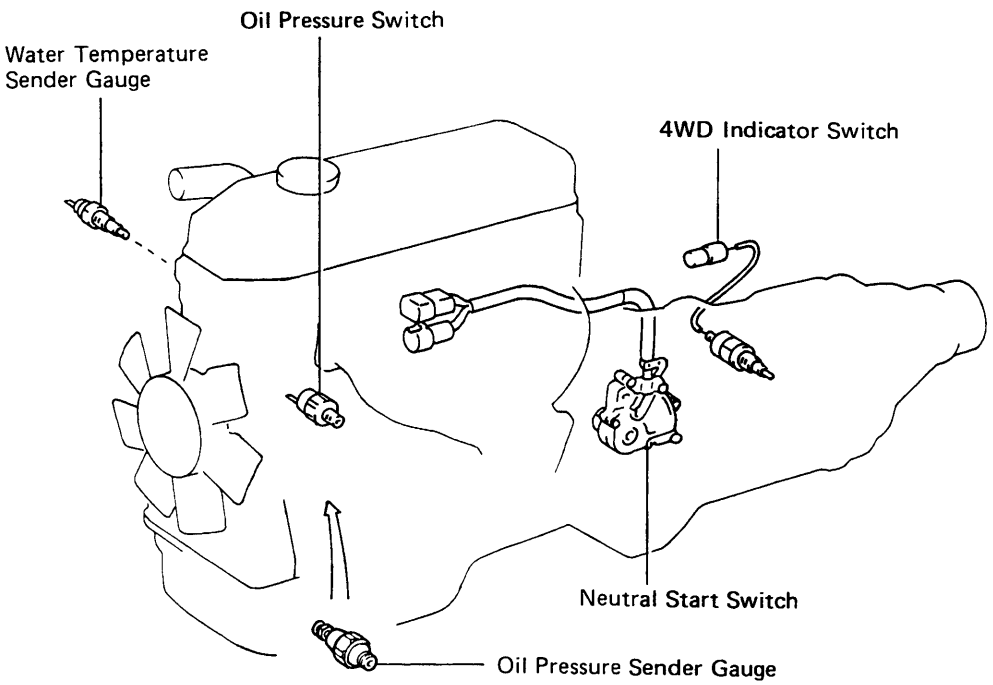

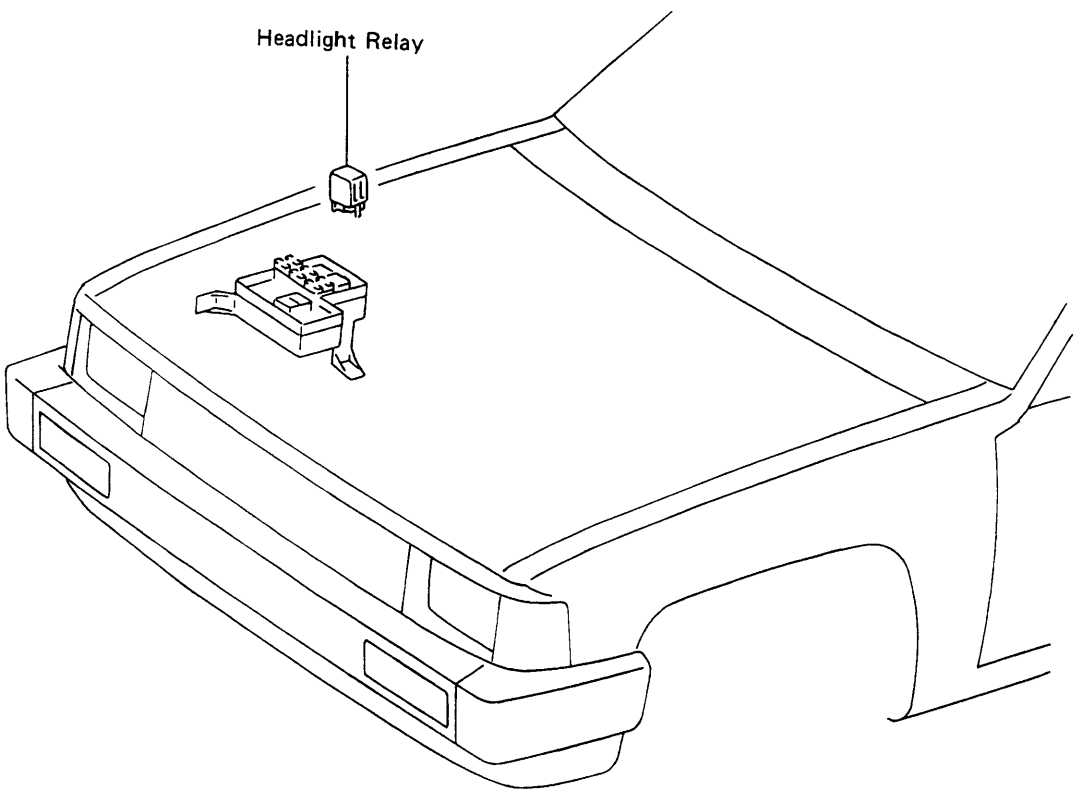

BE0510

DASH AND STEERING COLUMN SWITCHES AND RELAYS

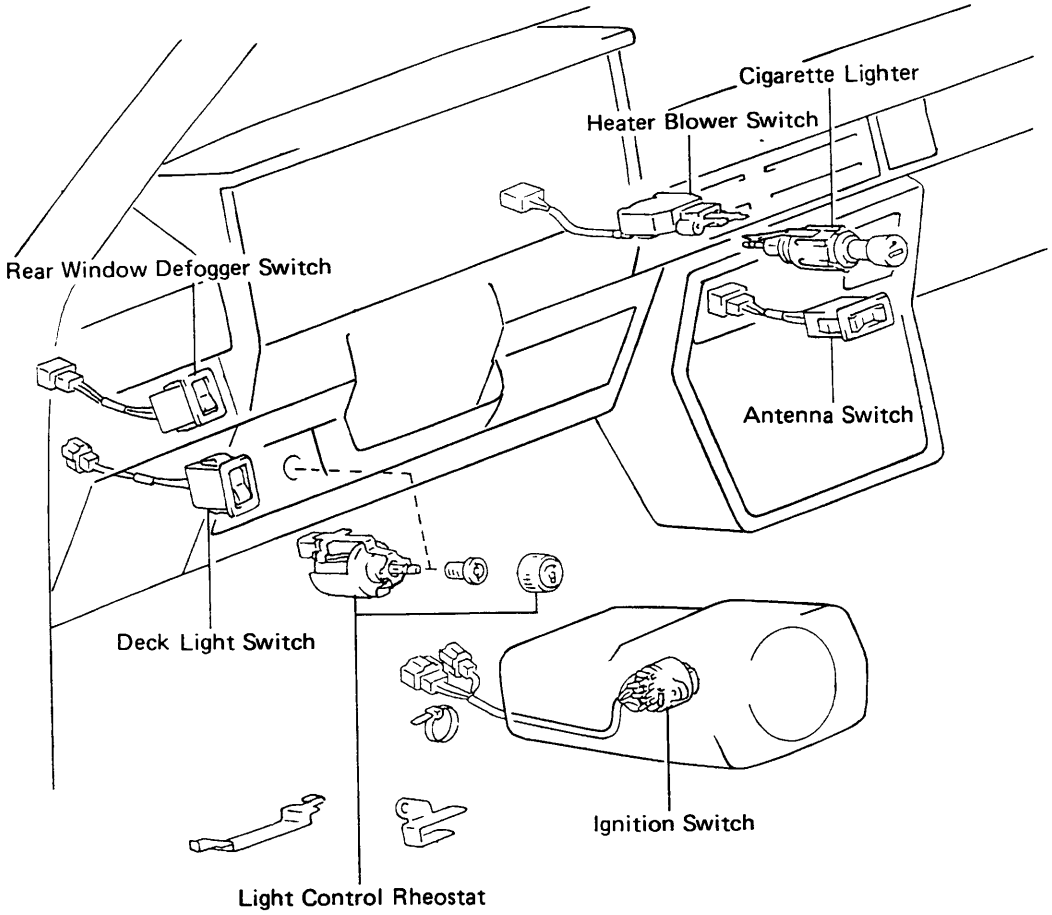

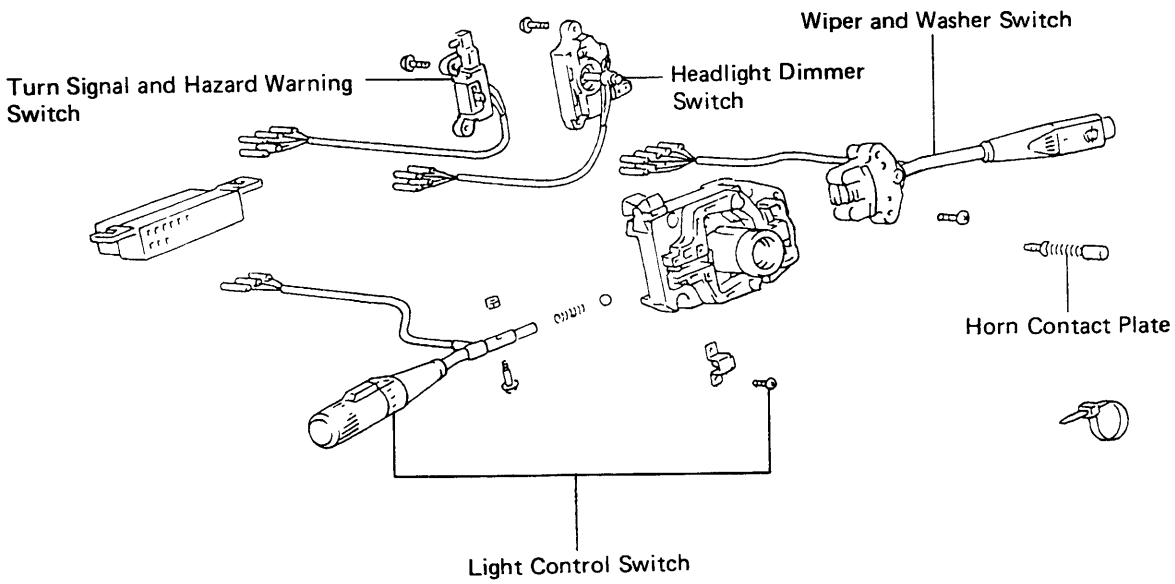

DASH AND STEERING COLUMN SWITCHES AND RELAYS (Cont'd)

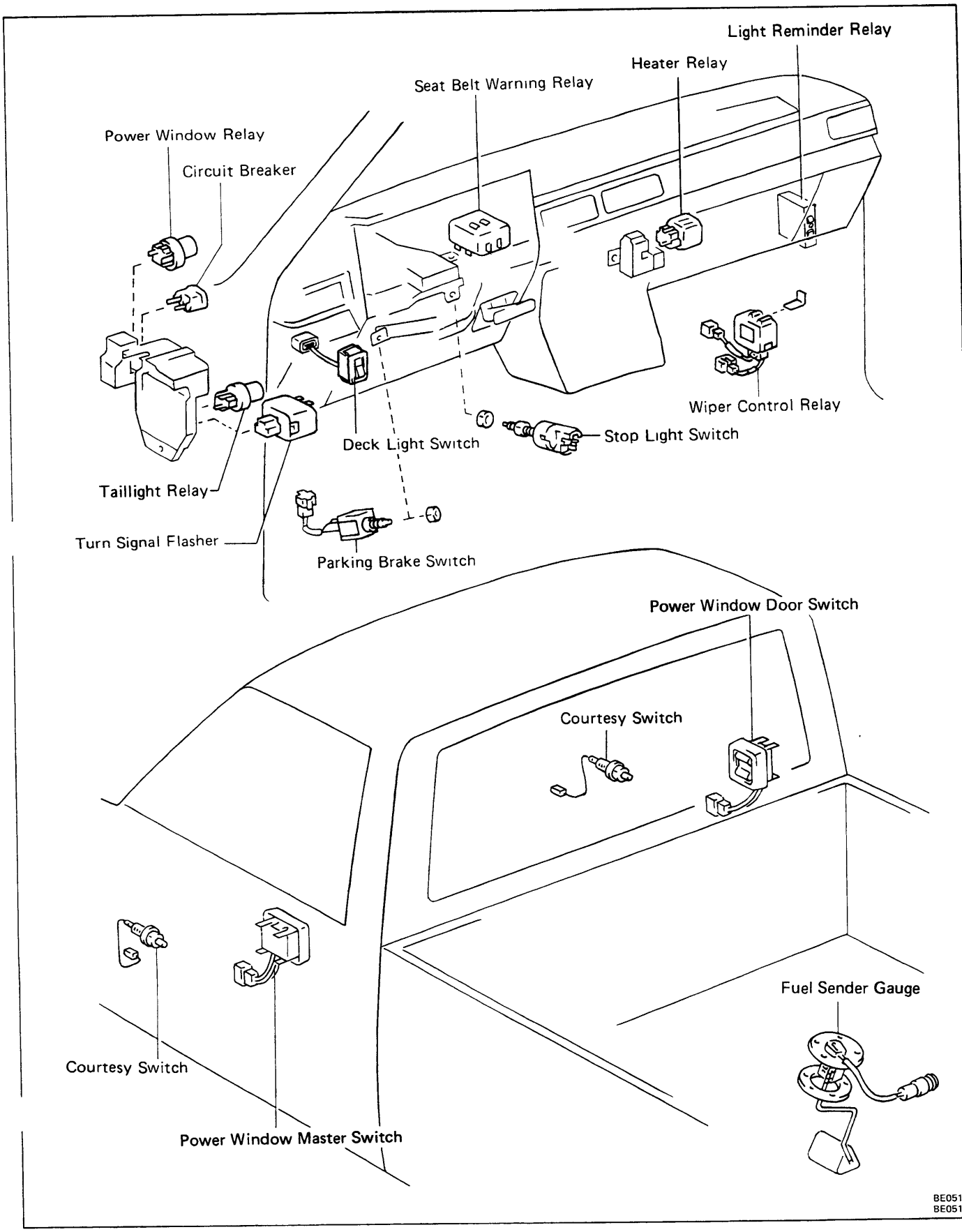

DASH AND STEERING COLUMN SWITCHES AND RELAYS (Cont'd)

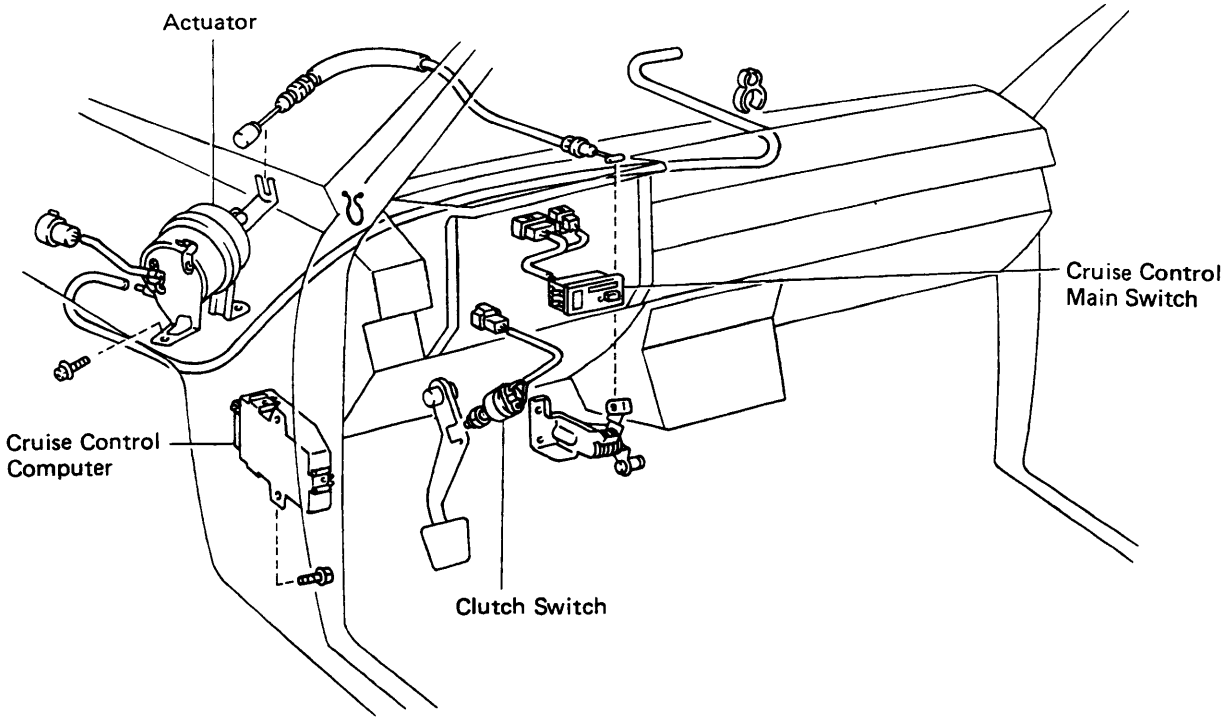

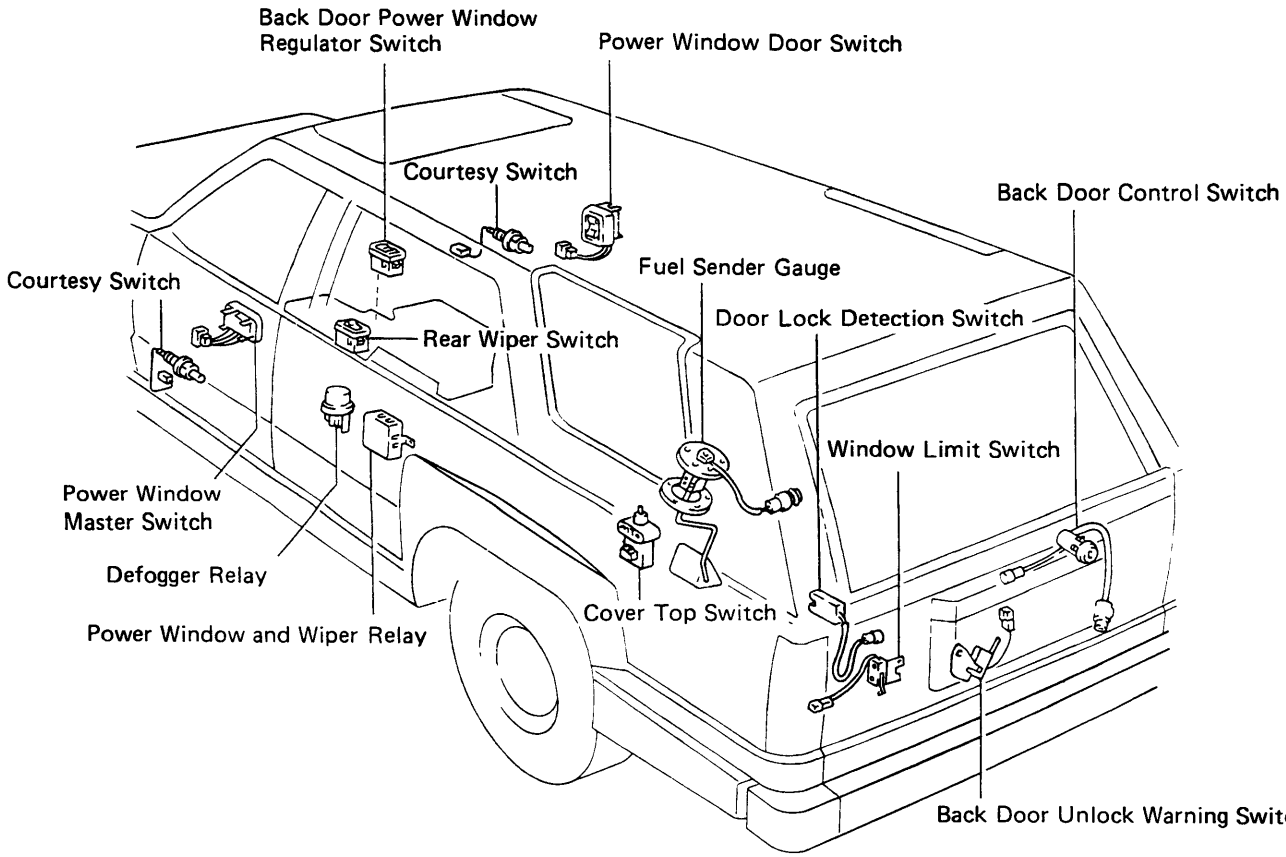

BE0281

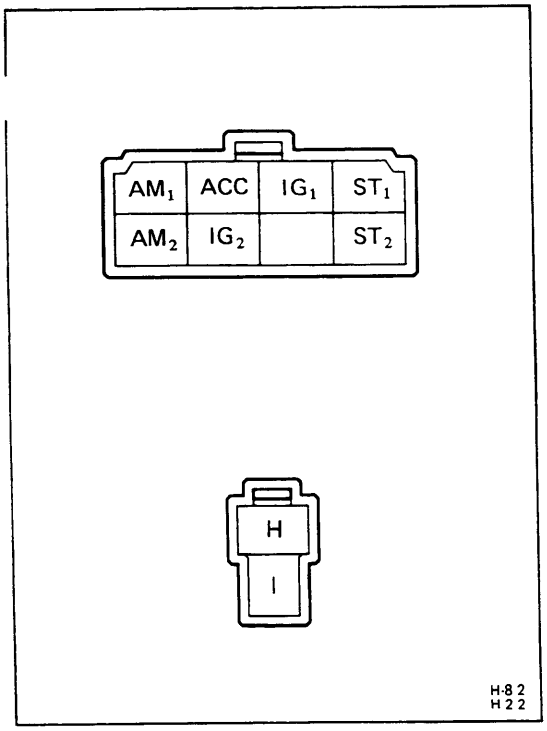

SWITCHES

Ignition Switch

INSPECTION OF IGNITION SWITCH

INSPECT SWITCH CONTINUITY

Inspect the switch continuity between terminals.

Switch position \ Terminal (Wire color)	AM1 (B-R)	ACC (L-R)	IG1 (B-Y)	ST1 (B-W)	AM2 (BR)	IG2 (BR-W)	ST2 (BR-R)	H (G-W)	I (G-W)
LOCK									
ACC	○—○								
ON	○—○—○				○—○				
START	○—	—○—○			○—	—○—	—○		
warning: normal									
warning: push								○—	—○

If continuity is not as specified, replace the switch.

Combination Switch

INSPECTION OF COMBINATION SWITCH

1. **INSPECT LIGHT CONTROL SWITCH AND HEADLIGHT DIMMER SWITCH**

Inspect the switch continuity between terminals.

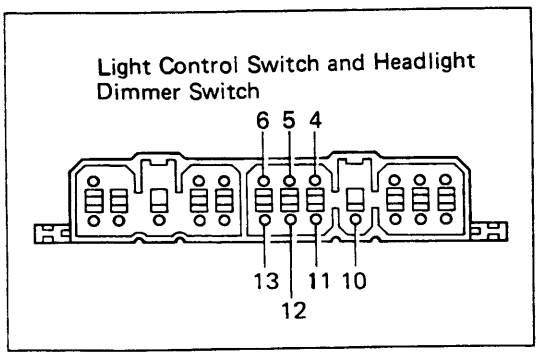

Light control switch

Switch position \ Terminal (Wire color)	10 or 11 EL (W)	10 or 11 T (W)	4 H (R)
OFF			
TAIL	○—	—○	
HEAD	○—	—○—	—○

Headlight dimmer switch

Switch position \ Terminal (Wire color)	13 ED (W-B)	6 HL (R-G)	5 HU (R-Y)	12 HF (R-W)
Flash	○—		—○—	—○
Low Beam	○—	—○		
High Beam	○—		—○	

If continuity is not as specified, replace the switch.

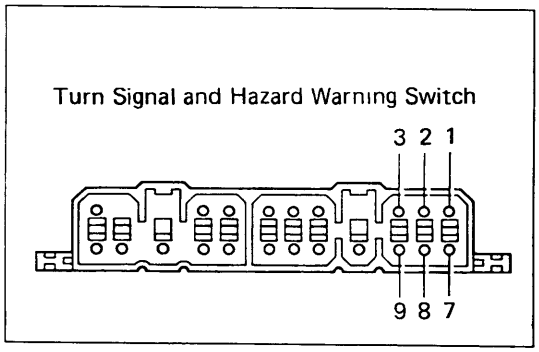

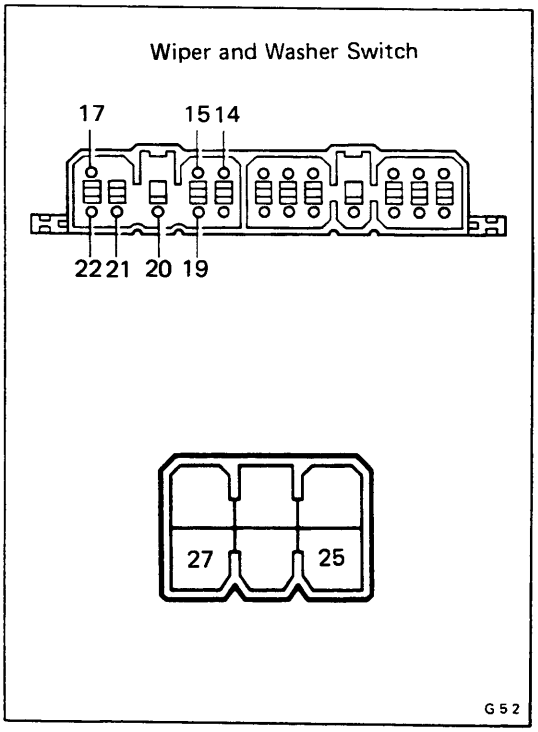

2. INSPECT TURN SIGNAL AND HAZARD WARNING SWITCH

Inspect the switch continuity between terminals.

Switch Position		Terminal (Wire color) 9 T_L (G-B)	3 T_B (G-W)	8 T_R (G-Y)	2 B_1 (G-L)	7 F (G)	1 B_2 (G-O)
Turn signal	L	○—○			○—○		
	N				○—○		
	R		○—○	○—○	○—○		
Hazard	ON	○—○	○—○			○—○	

If continuity is not as specified, replace the switch.

3. INSPECT WIPER AND WASHER SWITCH

Inspect the switch continuity between terminals.

Switch	Switch position \ Terminal (Wire color)	20 +S (L-R)	21 +1 (L-B)	17 +B (L-W)	22 +2 (L-O)	19 C_1 (LG-R)	14 E_W (B)	15 W (L)	27 VR_1 (Y)	25 VR_2 (Y)
Wiper	MIST		○—○							
	OFF	○—○								
	INT	○—○				○—○				
	LO		○—○							
	HI			○—○						
Washer	OFF									
	ON						○—○			
INT Time	SLOW	50 kΩ							○—○	
	•	34.25 kΩ							○—○	
	●	15.75 kΩ							○—○	
	FAST	0 kΩ							○—○	

If continuity is not as specified, replace the switch.

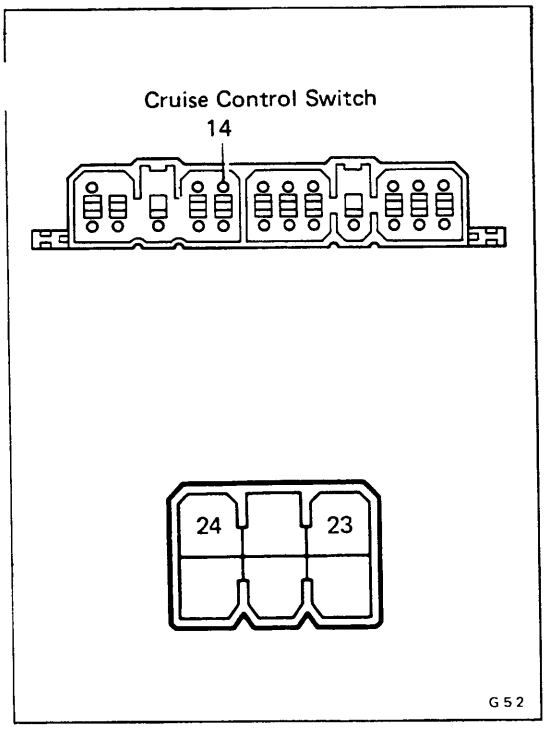

4. INSPECT CRUISE CONTROL SWITCH

Inspect the switch continuity between terminals.

Switch position \ Terminal (Wire color)	24 S_S (G)	23 S_R (R)	14 E_W (B)
SET COAST	○		○
OFF			
ACCEL RESUME		○	○

If continuity is not as specified, replace the switch.

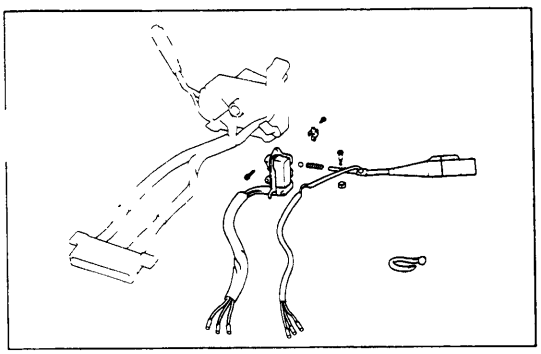

REPLACEMENT OF COMBINATION SWITCH

1. REPLACE LIGHT CONTROL SWITCH AND HEADLIGHT DIMMER SWITCH

(a) Remove the terminals from the connector. (See page BE-2 and BE-6)

(b) Remove the light control switch.

(c) Remove the headlight dimmer switch.

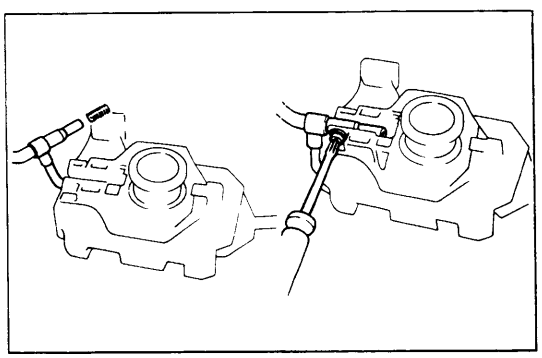

(d) Install the headlight dimmer switch.

(e) Insert the spring into the lever and install the lever with the set screw.

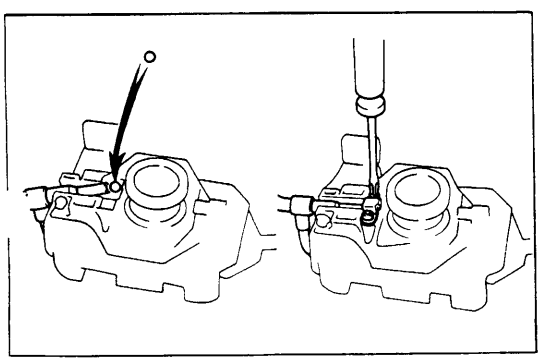

(f) Place the ball on the spring, position the lever at HI and install the plate.

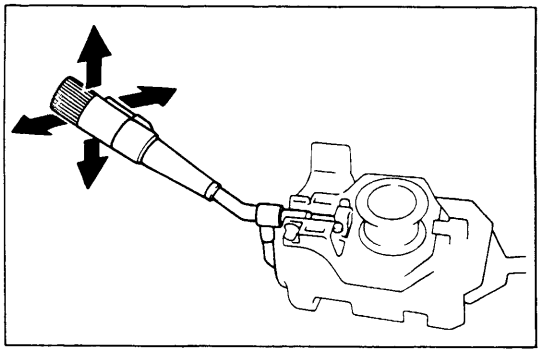

(g) Insure that the switch operates smoothly.

(h) Install the terminals to the connector.
(See page BE-3)

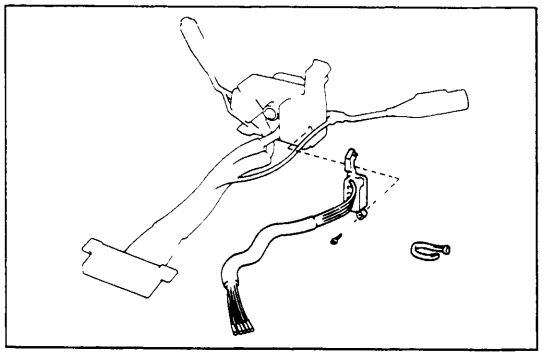

2. REPLACE TURN SIGNAL AND HAZARD WARNING SWITCH

(a) Remove the terminals from the connector.
(See page BE-2)

(b) Remove the turn signal and hazard warning switch.

(c) Install the turn signal and hazard warning switch.

(d) Install the terminals to the connector.
(See page BE-3)

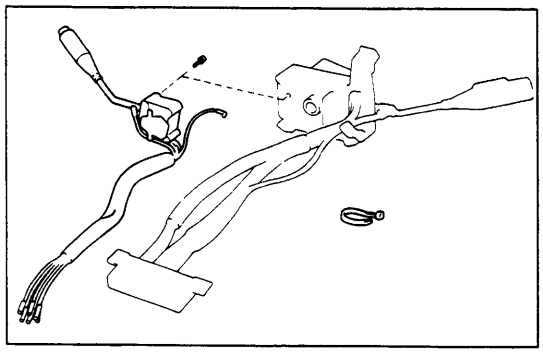

3. REPLACE WIPER AND WASHER SWITCH

(a) Remove the terminals from the connector.
(See page BE-2)

(b) Remove the wiper control switch and washer switc

(c) Install the wiper control switch and washer switch.

(d) Install the terminals to the connector.
(See page BE-3)

LIGHTING
Troubleshooting

Problem	Possible cause	Remedy	Page
Only one light does not light	Light bulb burned out Socket, wire or ground faulty	Replace bulb Repair as necessary	
Headlights do not light	Fusible link blown Headlight control relay faulty Light control/dimmer switch faulty Wiring or ground faulty	Replace fusible link Check relay Check switch Repair as necessary	 BE-14 BE-9
High beam headlights or headlight flashers do not operate	Light control/dimmer switch faulty Wiring or ground faulty	Check switch Repair as necessary	BE-9
Tail, parking and license light do not light	TAIL fuse blown Fusible link blown Tailight control relay faulty Light control switch faulty Wiring or ground faulty	Replace fuse and check for short Replace fusible link Check relay Check switch Repair as necessary	BE-3 BE-14 BE-9
Stop lights do not light	STOP fuse blown Stop light switch faulty Wiring or ground faulty	Replace fuse and check for short Adjust or replace switch Repair as necessary	BE-3
Stop lights stay on	Stop light switch faulty	Adjust or replace switch	
Instrument lights do not light (taillights light)	Light control rheostat faulty Wiring or ground faulty	Check rheostat Repair as necessary	BE-14
Turn signal does not flash on one side	Turn signal switch faulty Wiring or ground faulty	Check switch Repair as necessary	BE-10
Turn signals do not operate	HAZ-HORN fuse blown Turn signal flasher faulty Turn signal/hazard switch faulty Wiring or ground faulty	Replace fuse and check for short Check flasher Check switch Repair as necessary	BE-3 BE-15 BE-10
Hazard warning lights do not operate	HAZ-HORN fuse blown Turn signal flasher faulty Turn signal/hazard switch faulty Wiring or ground faulty	Replace fuse and check for short Check flasher Check switch Repair as necessary	BE-3 BE-15 BE-10

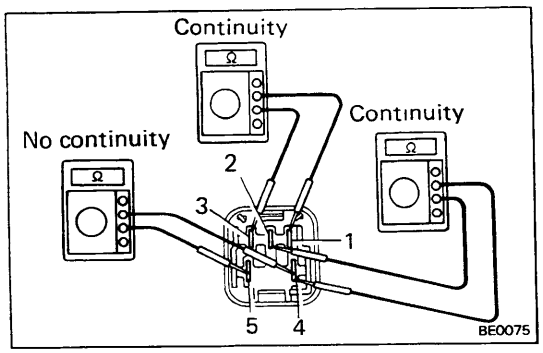

Headlight Control Relay

INSPECTION OF HEADLIGHT CONTROL RELAY

1. **INSPECT RELAY CONTINUITY**
   (a) Check that there is continuity between terminals 1 and 3.
   (b) Check that there is continuity between terminals 2 and 4.
   (c) Check that there is no continuity between terminals 4 and 5.

   If continuity is not as specified, replace the relay.

2. **INSPECT RELAY OPERATION**
   (a) Apply battery voltage across terminals 1 and 3.
   (b) Check that there is continuity between terminals 4 and 5.
   (c) Check that there is no continuity between terminals 2 and 4.

   If operation is not as specified, replace the relay.

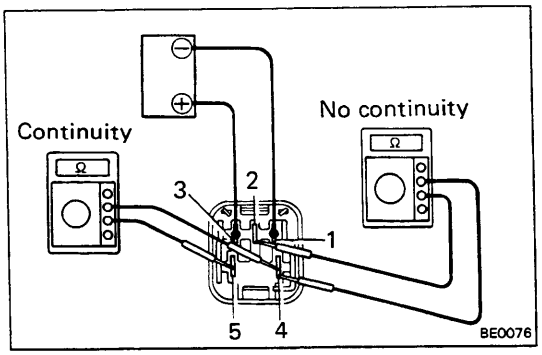

Taillight Control Relay

INSPECTION OF TAILLIGHT CONTROL RELAY

1. **INSPECT RELAY CONTINUITY**
   (a) Check that there is continuity between terminals 1 and 2.
   (b) Check that there is no continuity between terminals 2 and 3.

   If continuity is not as specified, replace the relay.

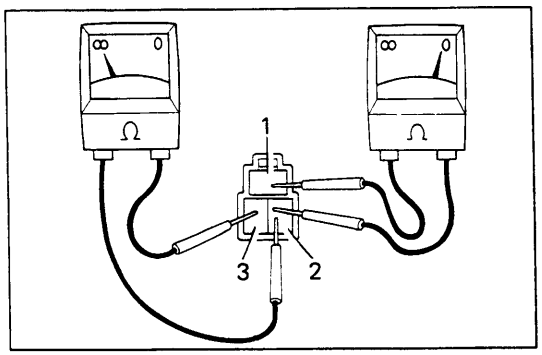

2. **INSPECT RELAY OPERATION**
   (a) Apply battery voltage across terminals 1 and 2.
   (b) Check that there is continuity between terminals 2 and 3.

   If operation is not as specified, replace the relay.

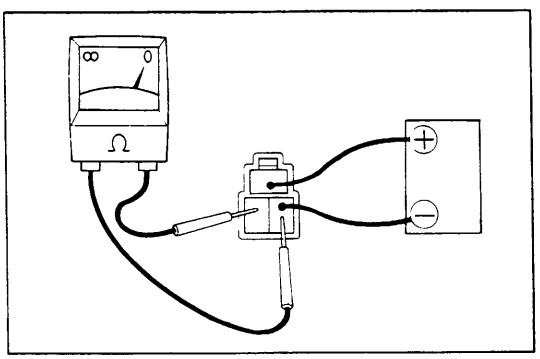

Light Control Rheostat

INSPECTION OF LIGHT CONTROL RHEOSTAT

INSPECT RESISTANCE OF RHEOSTAT

Point	Resistance (Ω)
Full counterclockwise	∞
Midpoint	Approx. 7
Full clockwise	0

If resistance is not as specified, replace the rheostat.

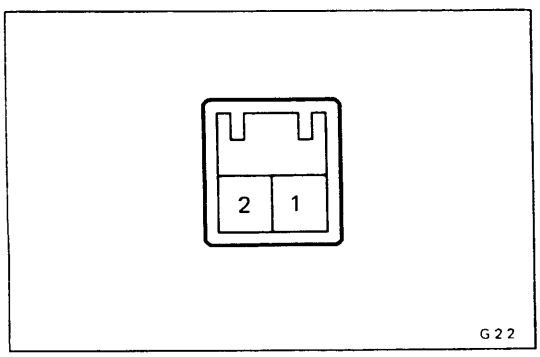

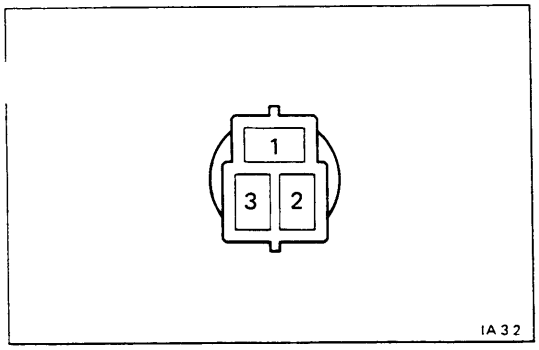

Turn Signal Flasher

INSPECTION OF TURN SIGNAL FLASHER

INSPECT FLASHER OPERATION

(a) Connect the positive (+) lead from the battery to terminal 3. Connect the negative (−) lead to terminal 2.

(b) Connect a 55W bulb between terminals 1 and 2, and check that the bulb goes on and off.

NOTE: The turn signal lights should flash 75 to 95 times per minute.

If one of the front or rear turn signal lights has an open circuit, the number of flashes would be more than 120 per minute.

If one of the side turn signal lights has an open circuit, the number of flashes would increase by about 10 per minute.

If continuity is not as specified, replace the flasher.

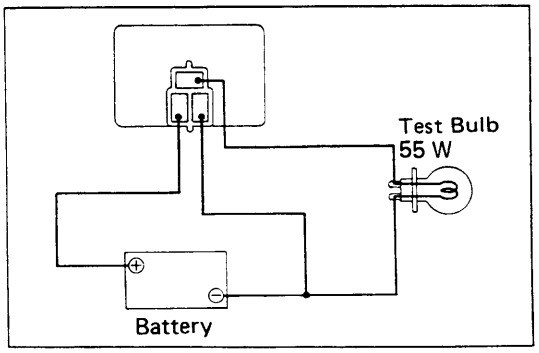

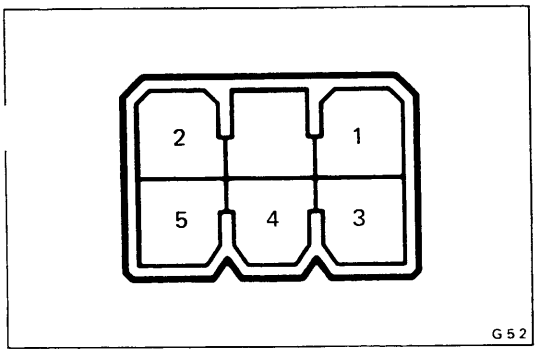

Deck Light Switch

INSPECTION OF DECK LIGHT SWITCH

INSPECT SWITCH CONTINUITY

Inspect the switch continuity between terminals.

Terminal / Switch position	Indicator 1	Indicator 2	3	4	5
ON	○	○		○	○
OFF	○	○	○		○

If continuity is not as specified, replace the switch or bulb.

Rear Room Light Switch

INSPECTION OF REAR ROOM LIGHT SWITCH

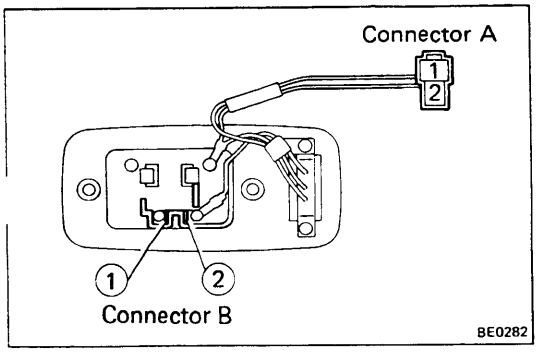

INSPECT SWITCH CONTINUITY

Inspect the switch continuity between terminals.

Terminal / Switch position	Connector A 1	Connector A 2	Connector B 1	Connector B 2
Right	○	○	○	
Left		○	○	○

If continuity is not as specified, replace the switch.

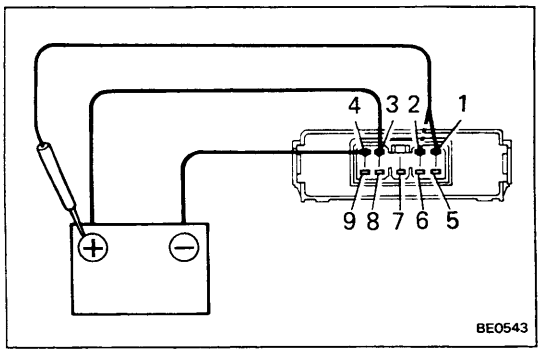

Light Reminder Relay

INSPECTION OF LIGHT REMINDER RELAY

1. INSPECT OPERATION OF WARNING BUZZER CIRCUIT

Connect the positive (+) lead from the battery to terminal 3. Connect the negative (–) lead to terminal 4.

(a) Check that the buzzer does not sound when connected terminal 1 or 2 to the positive (+) lead.

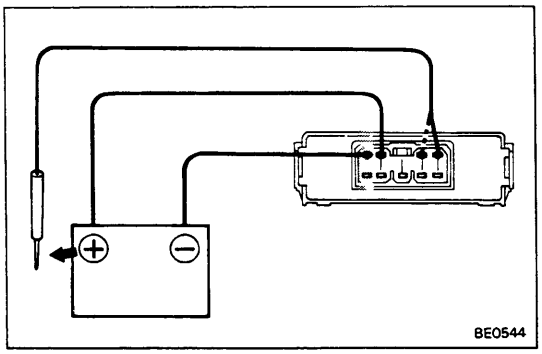

(b) Check that the buzzer sound when disconnected terminal 1 or 2 from the positive (+) lead.

If operation is not as specified, replace the relay.

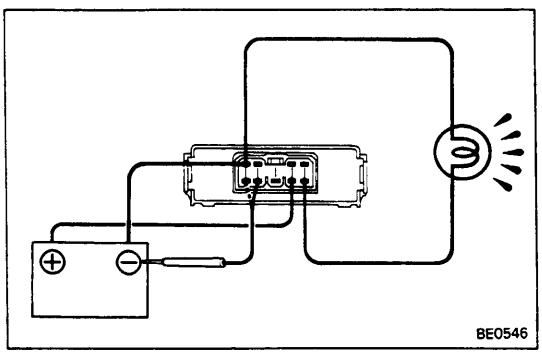

2. INSPECT OPERATION OF ILLUMINATION CONTROL

Connect the positive (+) lead from the battery to terminal 6. Connect the negative (–) lead to terminal 4. Connect the 1.4W test bulb between terminals 4 and 5.

(a) Check that the test bulb lights when connected terminal 8 or 9 to the negative (–) lead.

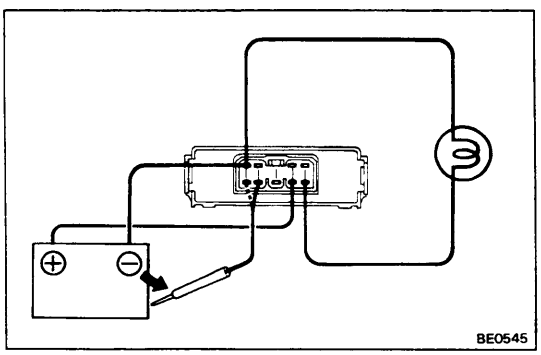

(b) Check that the test bulb does not light for 6 to 14 seconds after terminal 8 or 9 is disconnected from the negative (–) lead.

If operation is not as specified, replace the relay.

WIPERS AND WASHERS

Troubleshooting

Problem	Possible cause	Remedy	Page	
			Front	Rear
Wipers do not operate of return to off position	Fuse blown	Replace fuse and check for short	BE-3	BE-3
	Wiper motor faulty	Check motor	BE-18	BE-20
	Wiper switch faulty	Check switch	BE-10	BE-19
	Wiring or ground faulty	Repair as necessary		
Wipers do not operate in INT position	Wiper control relay faulty	Check relay	BE-17	
	Wiper switch faulty	Check switch	BE-10	BE-19
	Wiper motor faulty	Check motor	BE-18	BE-20
	Wiring or ground faulty	Repair as necessary		
Washer does not operate	Washer hose or nozzle clogged	Repair as necessary		
	Washer motor faulty	Replace motor		
	Washer switch faulty	Check switch	BE-10	BE-19
	Wiring faulty	Repair as necessary		

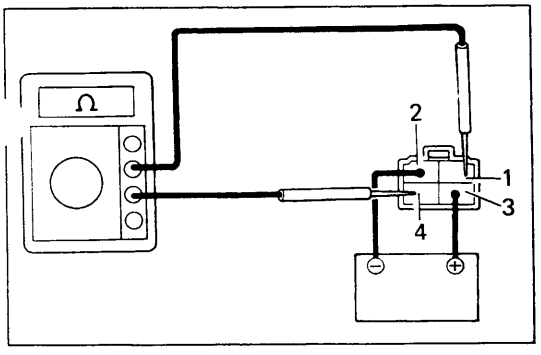

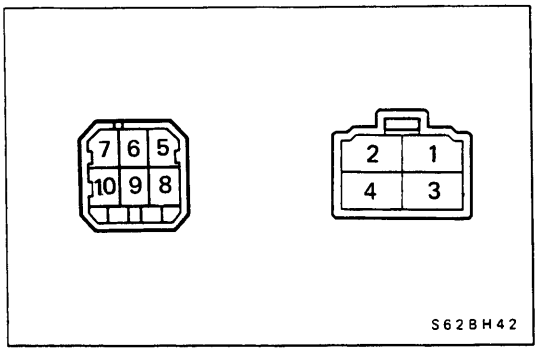

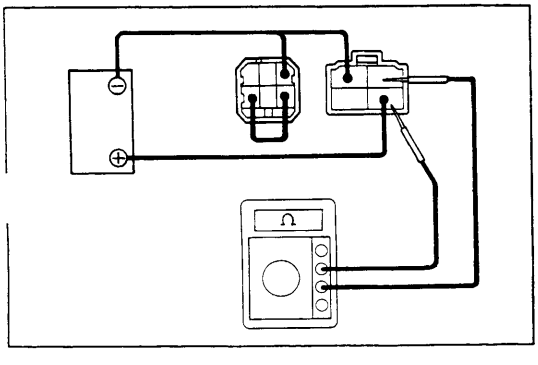

Wiper Control Relay

INSPECTION OF WIPER CONTROL RELAY (INT. Invariable Type)

INSPECT RELAY OPERATION

(a) Connect the positive (+) lead from the battery to terminal 3. Connect the negative (—) lead to terminal 2.

(b) Check that there is continuity between terminals 1 and 4 once each 3 to 5 seconds.

If operation is not as specified, replace the relay.

INSPECTION OF WIPER CONTROL RELAY (INT. Variable Type)

1. INSPECT INTERMITTENT OPERATION OF RELAY

(a) Connect the positive (+) lead from the battery to terminal 3. Connect the negative (—) lead to terminal 5.

(b) With terminal 2 and 5 connected, check that continuity between 1 and 3 is as shown in the following diagram.

Condition / Time (secs.)	Connect terminals 8 and 10
Duration of continuity	$0.8^{+0.3}_{-0.4}$
Duration of non-continuity	2.0 ± 0.6

If operation is not as specified, replace the relay.

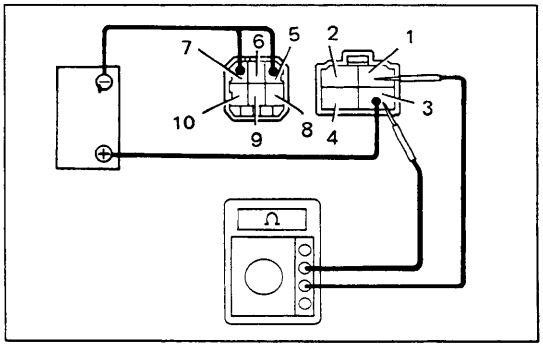

2. INSPECT WASHER CIRCUIT OF RELAY

(a) Connect the positive (+) lead from the battery to terminal 3. Connect the negative (–) lead to terminal 1.

(b) Inspect continuity between terminals 1 and 3 as follows.

Time (seconds)	Between terminals 1 and 3	Time (seconds)	Between terminals 1 and 3
Connect terminals 5 and 7		Disconnect terminals 5 and 7	
0.5±0.2	Continuity → No Continuity	2.2±0.5	Continuity → No Continuity

If operation is not as specified, replace the relay.

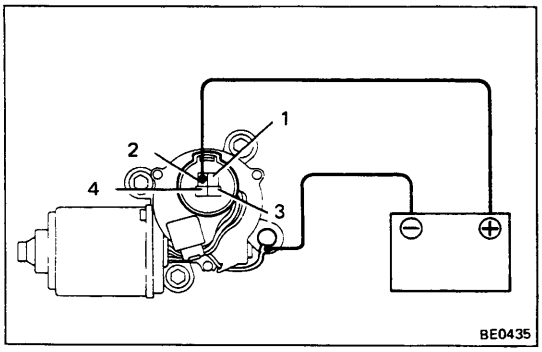

Front Wiper Motor

INSPECTION OF FRONT WIPER MOTOR

1. INSPECT THAT MOTOR TURNS AT LOW SPEED

(a) Disconnect the connector from the upper motor.

(b) Connect the positive (+) lead from the battery to terminal 2. Connect the negative (–) lead to the motor body.

(c) Check that the motor turns at low speed.

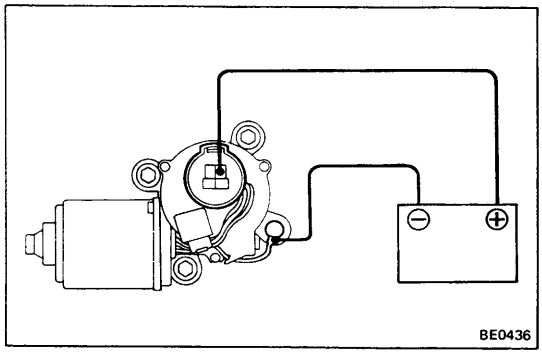

2. INSPECT THAT MOTOR TURNS AT HIGH SPEED

(a) Connect the positive (+) lead from the battery to terminal 1. Connect the negative (–) lead to the motor body.

(b) Check that the motor turns at high speed.

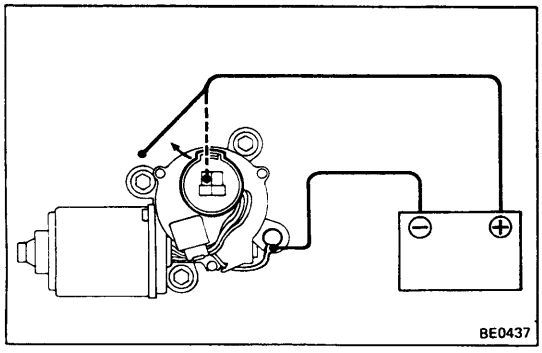

3. INSPECT THAT MOTOR STOPS RUNNING AT STOP POSITION

(a) Turn the motor at low speed.

(b) Stop motor operation at anywhere except the stop position by disconnecting the battery terminals.

B10595

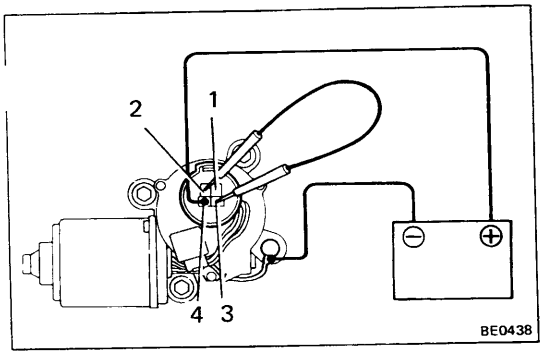

(c) Connect the positive (+) lead from the battery to terminal 4. Connect the negative (–) lead to the motor body. Connect terminals 2 and 3.

(d) Check that the motor stops running at the stop position after the motor operates again.

If operation is not as specified, replace the motor.

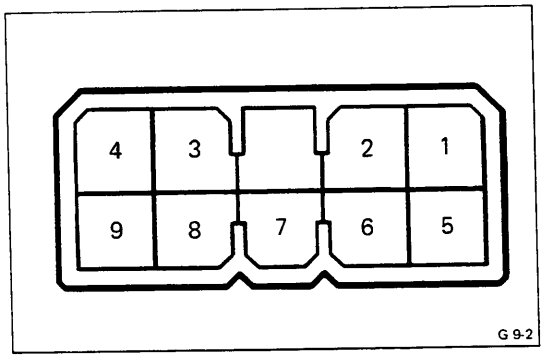

Rear Wiper and Washer Switch

INSPECTION OF REAR WIPER AND WASHER SWITCH

INSPECT SWITCH CONTINUITY

Inspect the continuity between terminals for each switch position shown in the table below.

Switch position \ Terminal	1 *	2 *	3	4	5	6	8	9
OFF	○—○		○		○	○		○
ON	○—○						○—○	
Washer	○—○			○			○	○

*For illumination light

If continuity is not as specified, replace the switch or bulb.

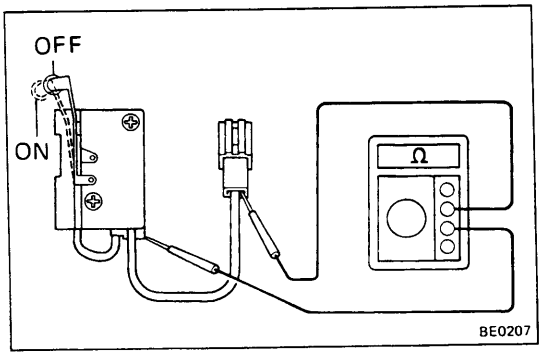

Window Limit Switch

INSPECTION OF WINDOW LIMIT SWITCH

INSPECT SWITCH CONTINUITY

Using an ohmmeter, inspect the continuity between the terminal and body ground.

(a) Check that there is no continuity when the switch is pushed (OFF position).

(b) Check that there is continuity when the switch is free (ON position).

If continuity is not as specified, replace the switch.

Power Window and Wiper Relay

(See page BE-58)

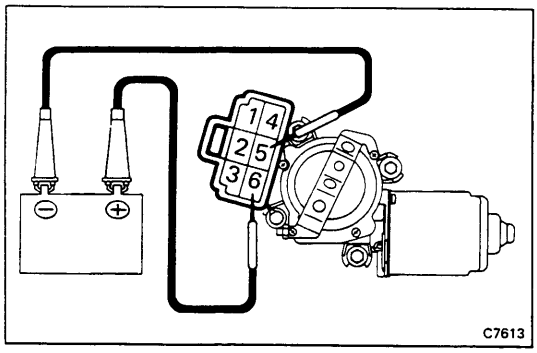

Rear Wiper Motor

INSPECTION OF REAR WIPER MOTOR

1. INSPECT THAT MOTOR TURNS

(a) Disconnect the connector from the wiper motor.

(b) Connect the positive (+) lead from the battery to terminal 6. Connect the negative (–) lead to terminal 5.

(c) Check that the motor turns.

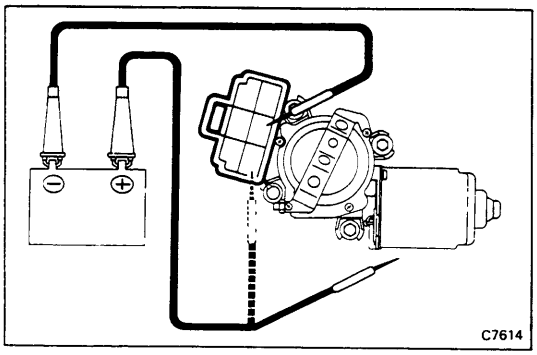

2. INSPECT THAT MOTOR TURNS RUNNING AT STOP POSITION

(a) Turn the motor.

(b) Stop motor operation at anywhere except the stop position by disconnecting the battery terminals.

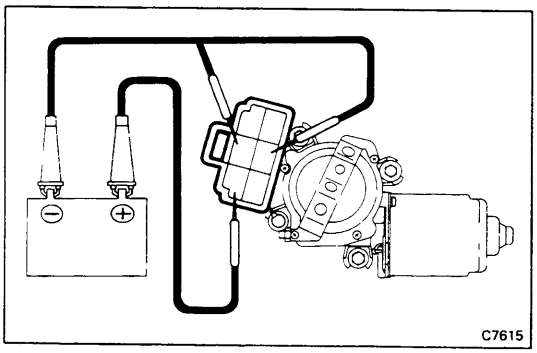

(c) Connect the positive (+) lead from the battery to terminal 3. Connect the negative (–) lead to terminal 5. Connect the terminals 2 and 5.

(d) Check that the motor stops running at stop positi after the motor operates again.

If operation is not as specified, replace the motor.

INSTRUMENTS AND SENDER GAUGES

Troubleshooting

Problem	Possible cause	Remedy	Page
Voltmeter does not work	Fuses blown	Replace in-line fuse and check for short	
	Voltmeter faulty	Check voltmeter	BE-24
	Wiring or ground faulty	Repair as necessary	
Tachometer does not work	ENGINE fuse blown	Replace fuse and check for short	BE-3
	Tachometer faulty	Check tachometer	BE-24
	Wiring or ground faulty	Repair as necessary	
Fuel gauge does not work	ENGINE fuse blown	Replace fuse and check for short	BE-3
	Fuel receiver gauge faulty	Check gauge	BE-25
	Sender gauge faulty	Check sender gauge	BE-26
	Wiring or ground faulty	Repair as necessary	
Water temperature gauge does not work	ENGINE fuse blown	Replace fuse and check for short	BE-3
	Water temperature gauge faulty	Check gauge	BE-26
	Water temperature sender gauge faulty	Check sender gauge	BE-27
	Wiring or ground faulty	Repair as necessary	
Brake warning light does not light	ENGINE fuse blown	Replace fuse and check for short	BE-3
	Bulb burned out	Replace bulb	
	Brake fluid level warning switch faulty	Check switch	BE-29
	Parking brake switch faulty	Check switch	BE-29
	Wiring or ground faulty	Repair as necessary	
Low oil pressure warning light does not light	ENGINE fuse blown	Replace fuse and check for short	BE-3
	Bulb burned out	Replace bulb	
	Oil pressure switch faulty	Check switch	BE-28
	Wiring or ground faulty	Repair as necessary	
Discharge warning light does not light	IGN fuse blown	Replace fuse and check for short	BE-3
	Bulb burned out	Replace bulb	
	Wiring or ground faulty	Repair as necessary	

Combination Meter and Gauge (w/Tachometer)

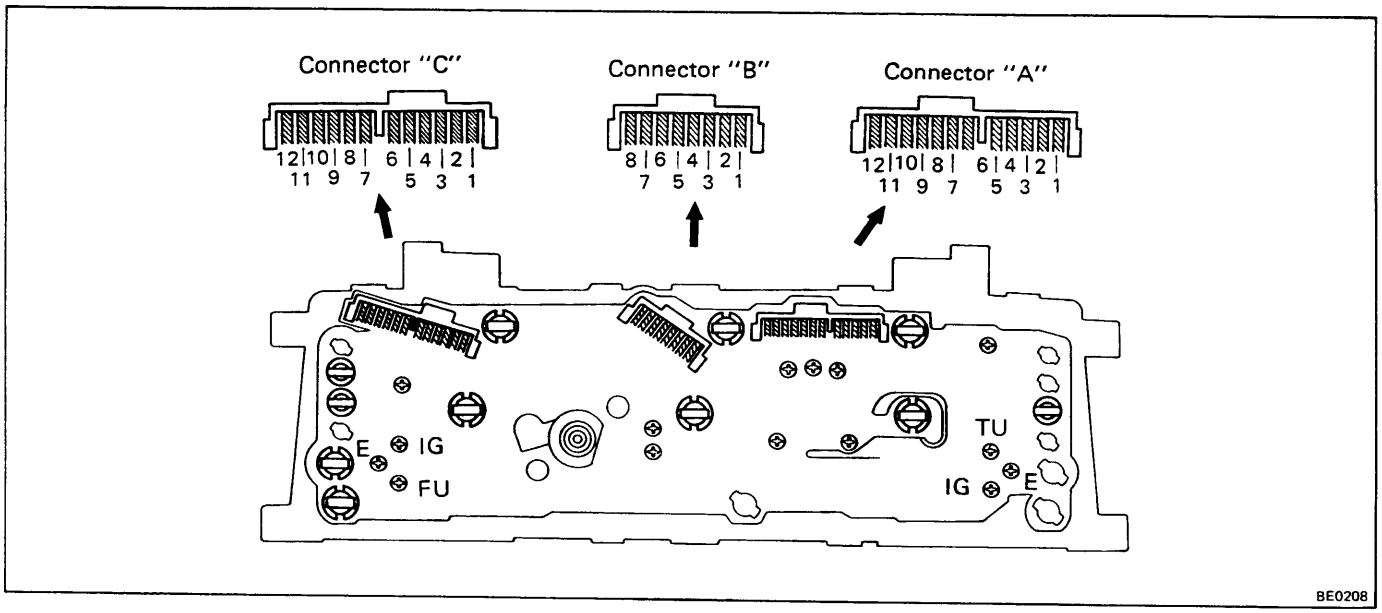

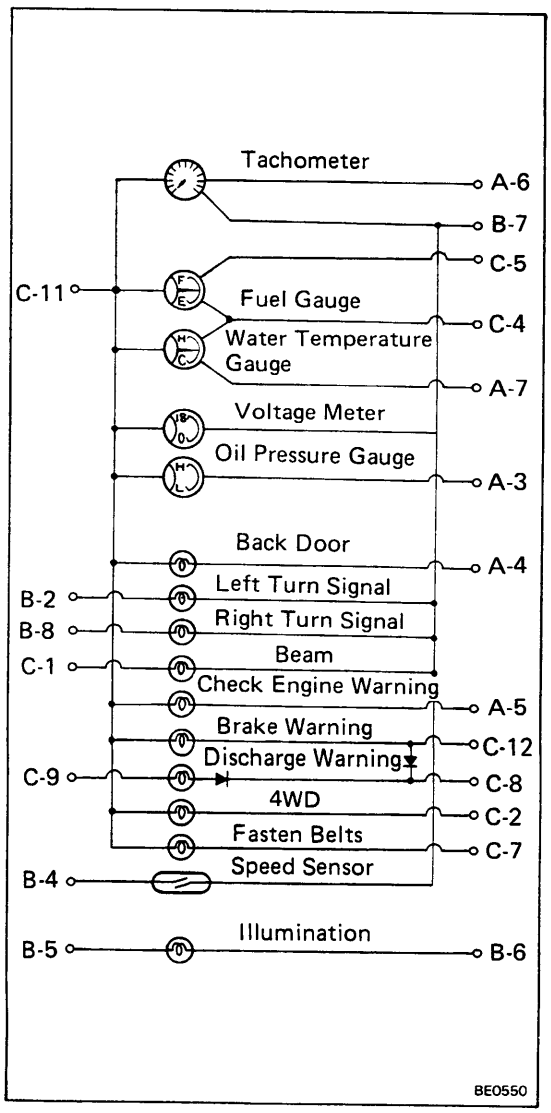

COMBINATION METER CIRCUIT

No.		Wiring connector side
A	3	Oil Pressure Sender Gauge or Oil Pressure Switch
	4	Back Door Unlock Warning Switch and Door Lock Detection Switch
	5	EFI Computer
	6	Ignition Coil
	7	Water Temperature Sender Gauge
B	2	Turn Signal Switch Terminal 9
	4	EFI Computer and Cruise Control Computer Terminal 7
	5	TAIL Fuse
	6	Light Control Rheostat Terminal 1
	7	Ground
	8	Turn Signal Switch Terminal 8
C	1	Headlight Dimmer Switch Terminal 6
	2	4WD Indicator Switch
	4	Ground
	5	Fuel Sender Gauge Terminal 1
	7	Seat Belt Warning Relay
	8	CHARGE Fuse
	9	IGN Fuse
	11	ENGINE Fuse
	12	Parking Brake Switch and Brake Fluid Level Warning Switch

B00021

Combination Meter and Gauge (w/o Tachometer)

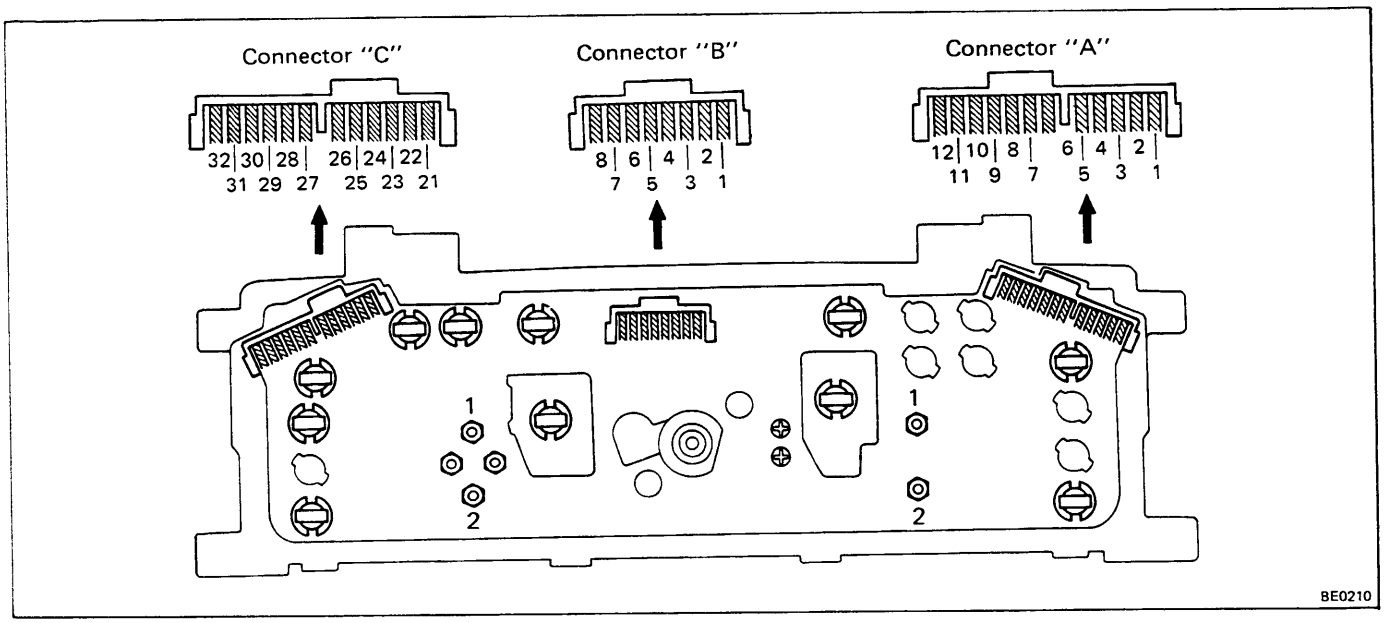

COMBINATION METER CIRCUIT

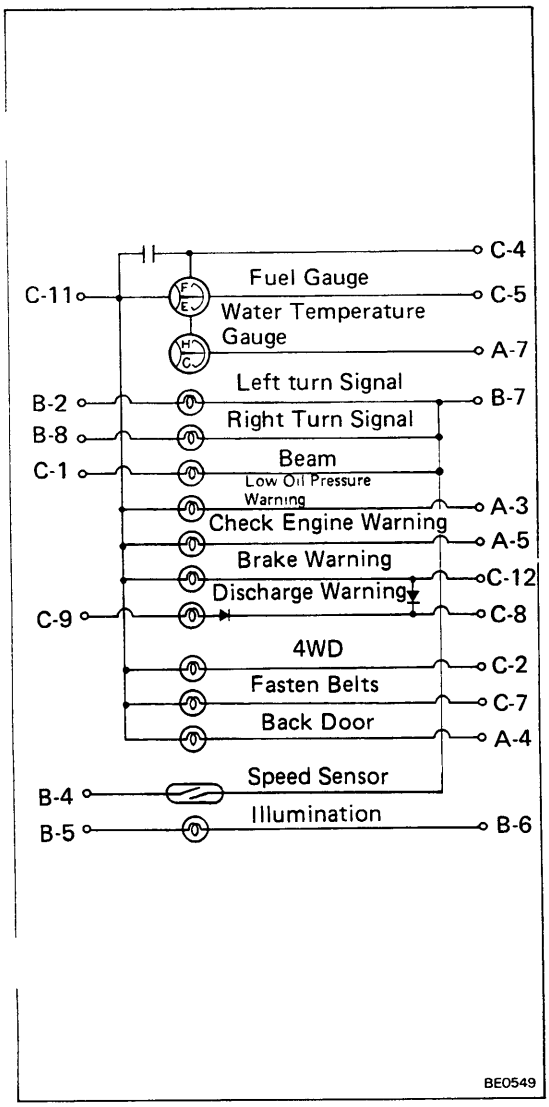

No.		Wiring connector side
A	3	Oil Pressure Switch
	4	Back Door Unlock Warning Switch and Door Lock Detection Switch
	5	EFI Computer
	7	Water Temperature Sender Gauge
B	2	Turn Signal Switch Terminal 9
	4	EFI Computer and Cruise Control Computer Terminal 7
	5	TAIL Fuse
	6	Light Control Rheostat Terminal 1
	7	Ground
	8	Turn Signal Switch Terminal 8
C	1	Headlight Dimmer Switch Terminal 5
	2	4WD Indicator Switch
	4	Ground
	5	Fuel Sender Gauge Terminal 1
	7	Seat Belt Warning Relay
	8	CHARGE Fuse
	9	IGN Fuse
	11	ENGINE Fuse
	12	Parking Brake Switch and Brake Fluid Level Warning Switch

B00020

Speedometer

ON-VEHICLE INSPECTION OF SPEEDOMETER

(a) Using a speedometer tester, inspect the speedometer for allowable indicating error and check the operation of the odometer.

NOTE: Tire wear and tire over or under inflation will increase the indicating error.

Standard indication (km/h)	Allowable range (km/h)
20	18 – 23
40	40 – 44
60	60 – 64.5
80	80 – 85
100	100 – 105
120	120 – 125.5
140	140 – 146
160	160 – 167

Standard indication (mph)	Allowable range (mph)
20	20 – 23
40	40 – 43.5
60	60 – 64
80	80 – 84.5
100	100 – 105

(b) Check the speedometer for pointer vibration and abnormal noises.

NOTE: Pointer vibration can be caused by a loose speedometer cable.

Tachometer

ON-VEHICLE INSPECTION OF TACHOMETER

(a) Connect a tune-up test tachometer and start the engine.

(b) Compare the tester and tachometer indications.

If the error is excessive, replace the tachometer.

CAUTION:

- **Reversing the connection of the tachometer will damage the transistors and diodes inside.**
- **When removing or installing the tachometer, be careful not to drop or subject it to severe impact.**

Standard indication (rpm)	700	3,000	5,000	7,000
Allowable range (rpm) 25°C DC 13 V	+20 −120	±200	±200	±300

Voltmeter

INSPECTION OF VOLTMETER

Compare the tester and voltmeter indications.

If the error is excessive, replace the voltmeter.

Fuel Gauge

INSPECTION OF FUEL GAUGE

1. INSPECT RECEIVER GAUGE OPERATION (w/ Tachometer)

(a) Disconnect the connector from the fuel sender gauge. Turn the ignition switch on. Check that the receiver gauge needle moves to the empty position.

(b) Connect a 3.4 W bulb between terminal 1 and body ground. Check that the bulb lights and that the receiver gauge needle operates.

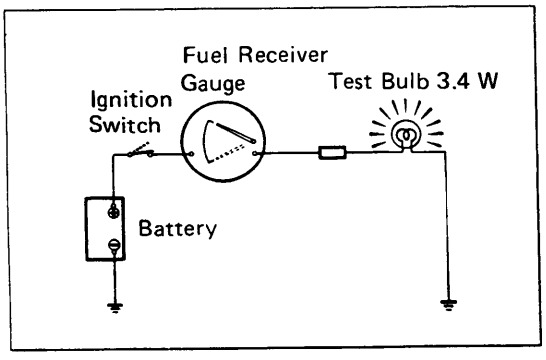

NOTE: Because of the silicon oil in the gauge, it will take about 90 seconds for the needle to stabilize.

If indications are not correct, remove and test the receiver gauge.

2. MEASURE RECEIVER GAUGE RESISTANCE BETWEEN TERMINALS (w/ Tachometer)

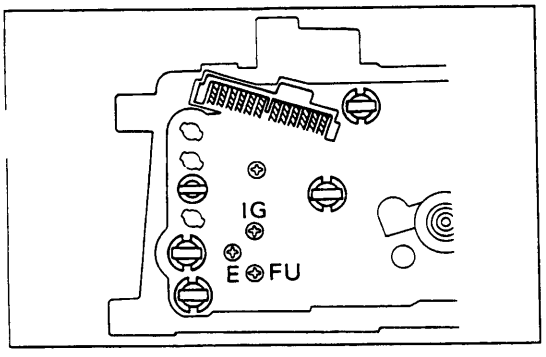

Between terminals	Resistance (Ω)
IG – FU	Approx. 83
FU – E	Approx. 156
IG – E	Approx. 239

If each resistance value is not as shown in the table above, replace the receiver gauge.

3. INSPECT RECEIVER GAUGE OPERATION (w/o Tachometer)

(a) Disconnect the connector from the fuel sender gauge. Connect the positive (+) lead from the voltmeter to terminal 1 and connect the negative (—) lead from the voltmeter to terminal 2.

(b) Turn the ignition switch on. Check that the meter needle vibrates near the 4.5 V position.

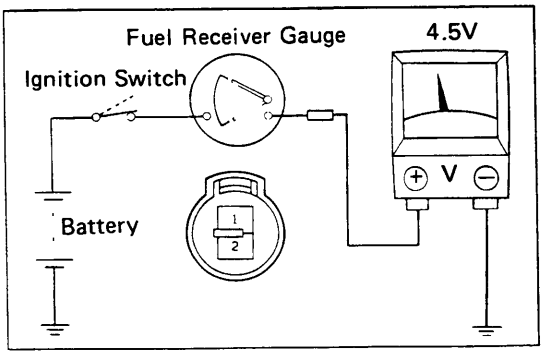

If voltage is not correct, remove and test the receiver gauge.

4. MEASURE RECEIVER GAUGE RESISTANCE (w/o Tachometer)

Using an ohmmeter, measure the resistance between terminals 1 and 2.

Resistance: Approx. 55 Ω

If resistance value is not as specified, replace the receiver gauge.

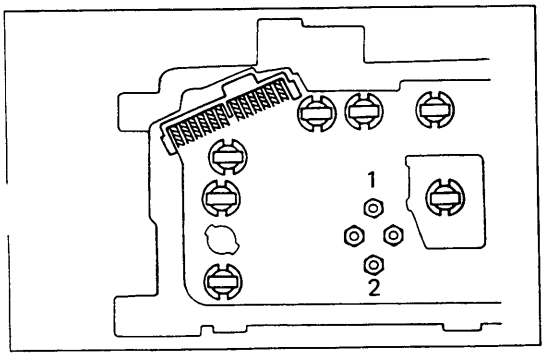

B10628

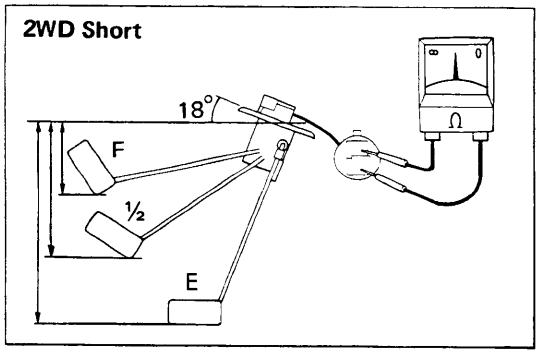

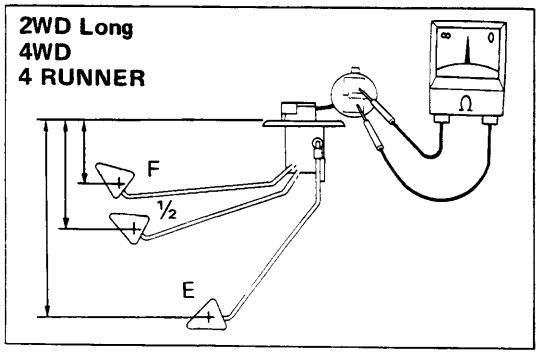

5. MEASURE RESISTANCE OF SENDER GAUGE

(a) Check that resistance changes as the float is moved from the top to bottom position.

(b) Measure the resistance between terminals 1 and 2.

2WD

	Float position mm (in.)		Resistance (Ω)
	Short Deck	Long Deck	
F	47 (1.85)	94.3 (3.71)	3^{+2}_{-3}
1/2	150 (5.91)	174.7 (6.88)	32.5±4.8
E	245.1 (9.65)	256.7 (10.11)	110±7.7

4WD

	Float position mm (in.)		Resistance (Ω)
	65 liters	73 liters	
F	105.7 (4.16)	114.3 (4.50)	3^{+2}_{-3}
1/2	196.2 (7.72)	214.7 (8.45)	32.5±4.8
E	288.2 (11.35)	317.1 (12.48)	110±7.7

4 RUNNER

	Float position mm (in.)		Resistance (Ω)
	56 liters	65 liters	
F	91.9 (3.62)	105.7 (4.16)	3^{+2}_{-3}
1/2	182.5 (7.19)	196.2 (7.72)	32.5 ± 4.8
E	262.0 (10.31)	288.2 (11.35)	110 ± 7.7

If each resistance value is not as shown in the table abo replace the sender gauge.

Water Temperature Gauge

INSPECTION OF WATER TEMPERATURE GAUGE

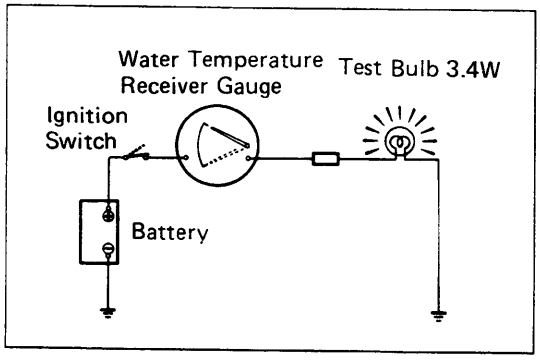

1. INSPECT RECEIVER GAUGE OPERATION (w/ Tachometer)

(a) Disconnect the connector from the sender gauge. Ground the terminal through a 3.4 W bulb as shown.

(b) Turn the ignition switch on. Check that the bulb lights and that the receiver gauge needle operates.

If indications are not correct, remove and test the receiver gauge.

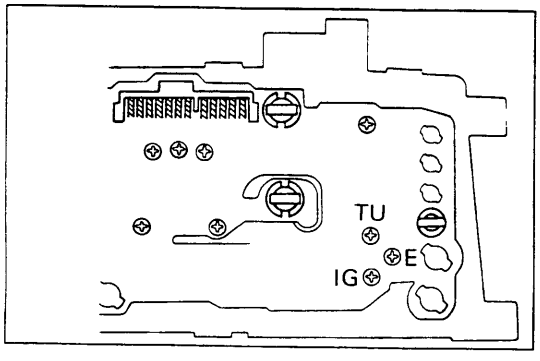

2. MEASURE RESISTANCE OF RECEIVER GAUGE (w/ Tachometer)

Using an ohmmeter, measure the resistance between terminals.

If each resistance value is not as shown in the table below, replace the receiver gauge.

Between terminals	Resistance (Ω)
IG – TU	Approx. 135
TU – E	Approx. 138
IG – E	Approx. 273

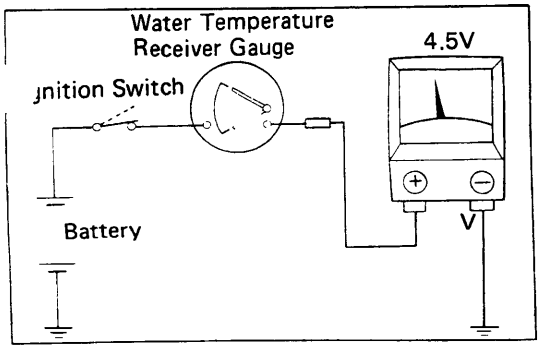

3. INSPECT RECEIVER GAUGE OPERATION (w/o Tachometer)

(a) Disconnect the connector from the sender gauge. Connect the positive (+) lead from the voltmeter to terminal and connect the negative (—) lead from the voltmeter to body ground.

(b) Turn the ignition switch on. Check that the meter needle vibrates near the 4.5 V position.

If voltage value is not correct, remove and test the receiver gauge.

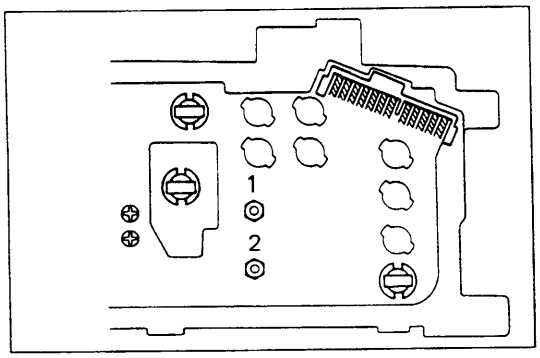

4. MEASURE RESISTANCE OF RECEIVER GAUGE (w/o Tachometer)

Using an ohmmeter, measure the resistance between terminals 1 and 2.

Resistance: Approx. 25 Ω

If resistance value is not correct, replace the receiver gauge.

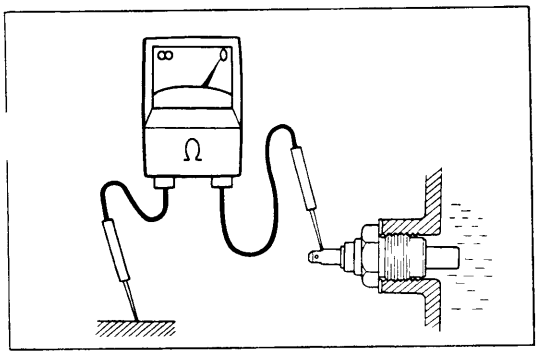

5. MEASURE RESISTANCE OF SENDER GAUGE

Using an ohmmeter, measure the resistance between the terminal and ground.

If each resistance value is not as shown in the table below, replace the sender gauge.

Water temperature °C (°F)	Resistance (Ω)
60 (140)	$146.6^{+26.5}_{-4.0}$
115 (239)	$24.3^{+1.3}_{-1.8}$

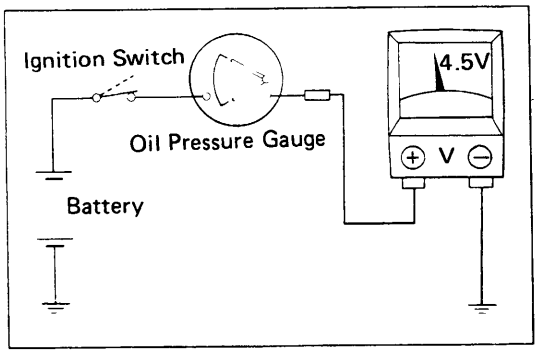

Oil Pressure Gauge

INSPECTION OF OIL PRESSURE GAUGE

1. INSPECT RECEIVER GAUGE OPERATION

(a) Disconnect the connector from the sender gauge. Connect the positive (+) lead from the voltmeter to the terminal and the negative (—) lead to body ground.

(b) Turn the ignition switch on. Check that the meter needle vibrates near the 4.5 V position.

If the voltage value is not correct, remove and test the receiver gauge.

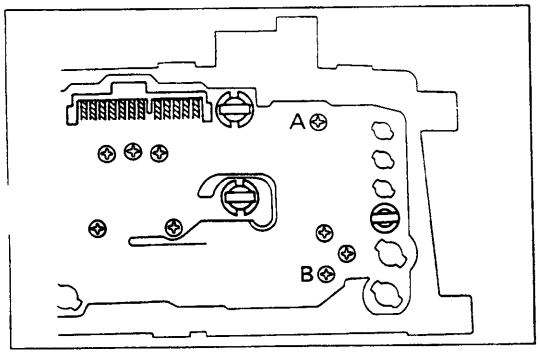

2. MEASURE RESISTANCE OF RECEIVER GAUGE

Using an ohmmeter, measure the resistance between terminals A and B.

Resistance: Approx. 44 Ω

If resistance value is not correct, replace the receiver gauge.

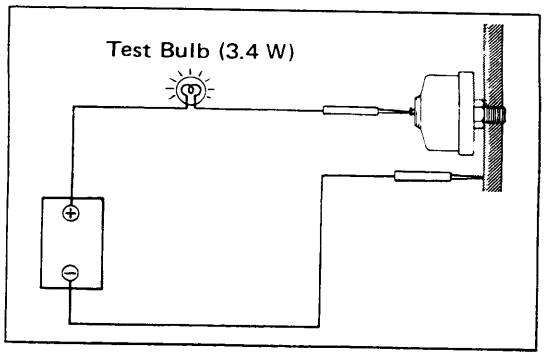

3. INSPECT SENDER GAUGE OPERATION

(a) Disconnect the connector from the sender gauge

(b) Connect a 12 V battery to the sender gauge termi... in series with a 3.4 W bulb. Check that the bulb does not light when the engine is stopped, and flashes when the engine is running. The number of flashes should vary with engine speed.

If operation is not correct, replace the sender gauge.

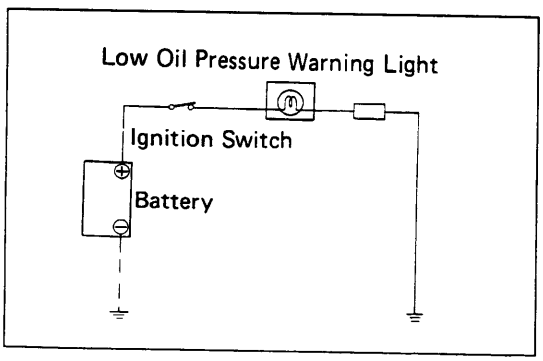

Low Oil Pressure Warning

INSPECTION OF LOW OIL PRESSURE WARNING

1. INSPECT WARNING LIGHT OPERTION

(a) Disconnect the connector from the switch. Connect the switch terminal and body ground.

(b) Turn the ignition switch on. Check that the bulb lights.

If operation is not correct, remove and test the bulb.

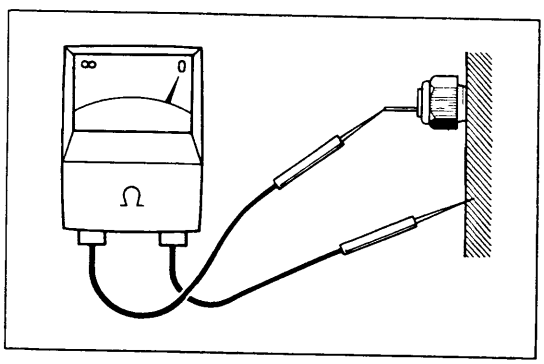

2. INSPECT SWITCH OPERATION

Check the continuity between the terminal and ground.

(a) Check that there is continuity with the engine stopped

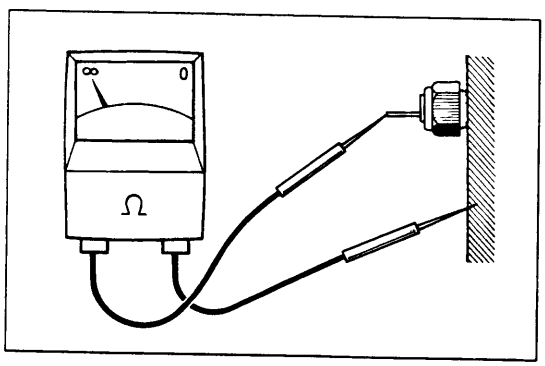

(b) Check that there is no continuity with the engine running.

NOTE: After the engine has started, oil pressure should rise over 0.2 kg/cm² (2.8 psi, 20 kPa).

If operation is not correct, replace the switch.

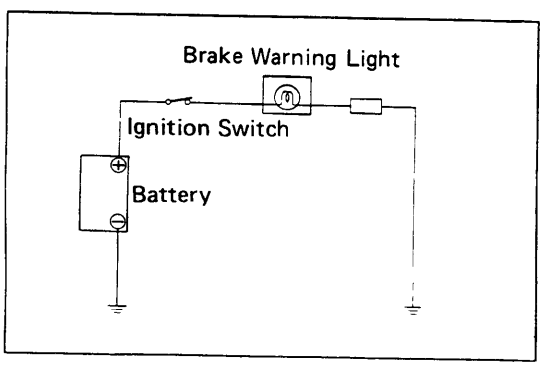

Brake Warning

INSPECTION OF BRAKE WARNING

1. INSPECT WARNING LIGHT OPERATION

(a) Disconnect the connector from the brake fluid lev... warning switch. Connect the switch terminals.

(b) Turn the ignition switch on. Check that the bulb lights.

If operation is not correct, remove and test the bulb.

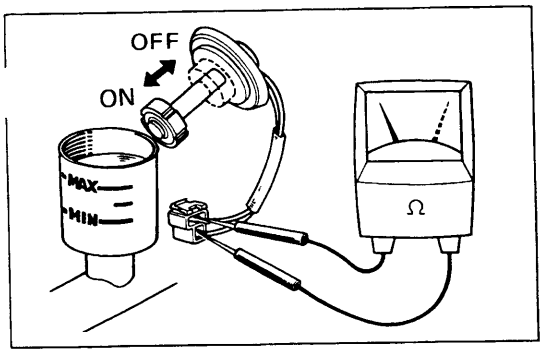

2. INSPECT OPERATION OF BRAKE FLUID LEVEL WARNING SWITCH

Inspect the switch operation when the switch is OFF (float up) and when the switch is ON (float down).

If operation is not correct, replace the switch.

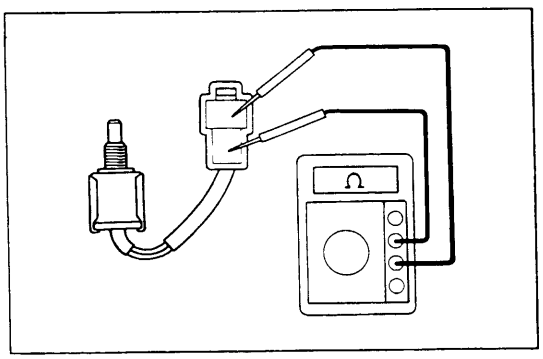

3. INSPECT OPERATION OF PARKING BRAKE SWITCH

Using an ohmmeter, inspect the continuity between the terminals.

(a) Check that there is continuity when the switch is free (parking brake lever pulled).

(b) Check that there is no continuity when the switch pin is pushed (parking brake lever returned).

If operation is not correct, replace the switch.

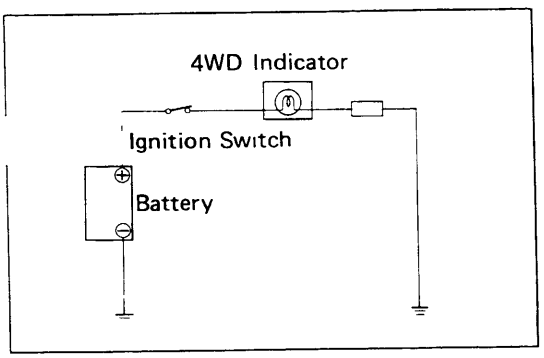

4WD Indicator

INSPECTION OF 4WD INDICATOR

1. INSPECT INDICATOR LIGHT OPERATION

(a) Disconnect the connector from the 4WD indicator switch. Connect the switch terminal and body ground.

(b) Turn the ignition switch on. Check that the bulb lights.

If operation is not correct, remove and test the bulb.

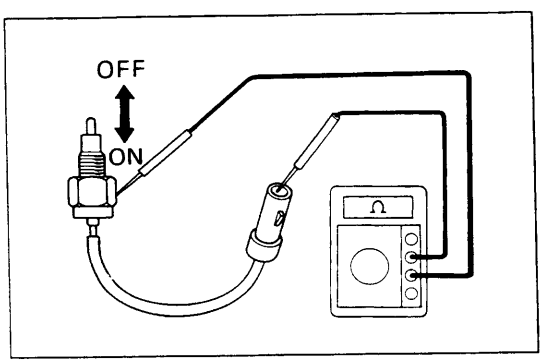

2. INSPECT 4WD INDICATOR SWITCH OPERATION

Using an ohmmeter, inspect the continuity between the terminal and body.

(a) Check that there is continuity when the switch pin is pushed.

(b) Check that there is no continuity when the switch is free.

If operation is not correct, replace the switch.

REAR WINDOW DEFOGGER

Troubleshooting

Problem	Possible cause	Remedy	Page
Rear window defogger does not work	Defogger switch faulty	Check switch	BE-30
	Defogger wire broken	Check wires	BE-31
	Wiring and ground faulty	Repair as necessary	

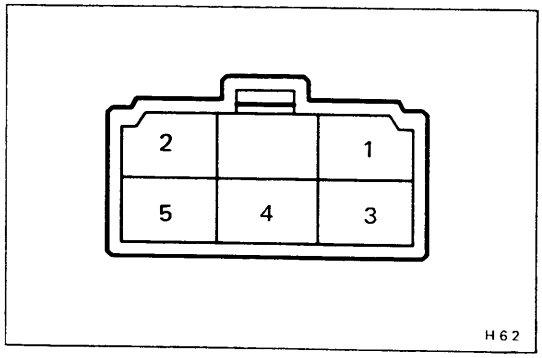

Rear Window Defogger Switch

INSPECTION OF DEFOGGER SWITCH

INSPECT SWITCH CONTINUITY

Inspect the switch continuity between terminals.

Switch position \ Terminal	1	2	4	Light 3	Light 5
OFF				○	○
ON	○	○		○	○

If continuity is not as specified, replace the switch.

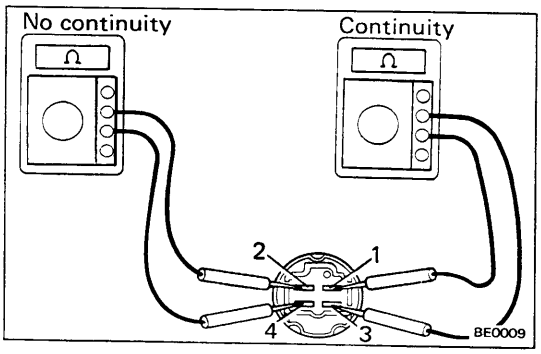

Defogger Relay

INSPECTION OF DEFOGGER RELAY

1. INSPECT RELAY CONTINUITY

   (a) Check that there is continuity between terminals 1 and 3.

   (b) Check that there is no continuity between terminals 2 and 4.

   If continuity is not as specified, replace the relay.

2. INSPECT RELAY OPERATION

   Connect the positive (+) lead from the battery to terminal 1 and connect the negative (−) lead from the battery to terminal 3. Then, check that there is continuity between terminals 2 and 4.

   If operation is not as specified, replace the relay.

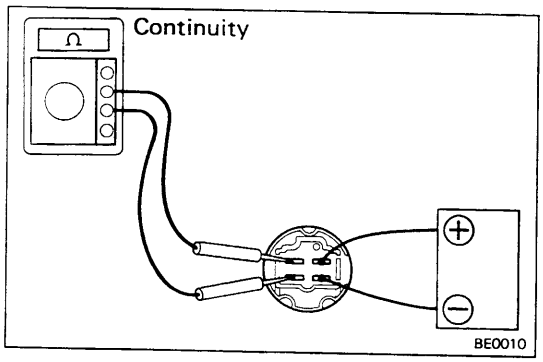

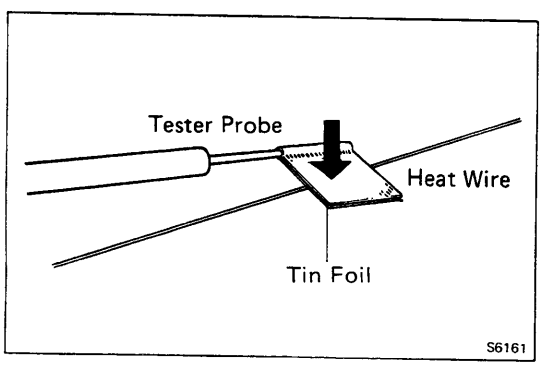

Rear Window Defogger Wires

CAUTION:

- **When cleaning the glass, use a soft, dry cloth, and wipe the glass in the direction of the wire. Take care not to damage the wires.**
- **Do not use detergents or glass cleaners with abrasive ingredients.**
- **When measuring voltage, wind a piece of tin foil around the tip of the negative probe and press the foil against the wire with your finger, as shown.**

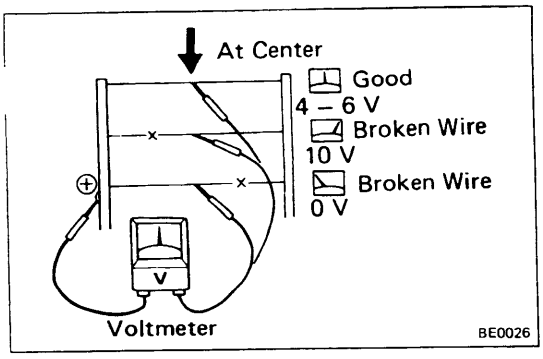

INSPECTION OF REAR WINDOW DEFOGGER WIRES

1. INSPECT FOR WIRE BREAKAGE

(a) Turn the defogger switch on.

(b) Inspect the voltage at the center of each heat wire.

Voltage	Criteria
Approx. 5 V	Good (No break in wire)
Approx. 10 V or 0 V	Broken wire

NOTE: If there is 10 V, the wire is broken between the center of the wire and positive (+) end. If there is no voltage, the wire is broken between the center of the wire and ground.

2. INSPECT FOR WIRE BREAKAGE POINT

(a) Place the voltmeter positive (+) lead against the defogger positive (+) terminal.

(b) Place the voltmeter negative (—) lead with the foil strip against the heat wire at the positive (+) terminal end and shift it toward the negative (—) terminal end.

(c) The point where the voltmeter deflects from zero to several volts is the place where the heat wire is broken.

NOTE: If the heat wire is not broken, the voltmeter will indicate 0V at the positive (+) end of the heat wire but gradually increase to 12 V as the meter probe is moved to the other end.

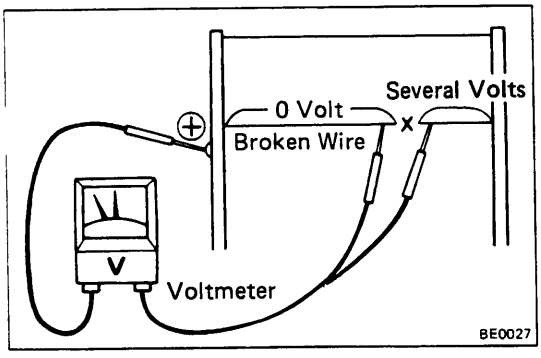

REPAIR OF REAR WINDOW DEFOGGER WIRES

CAUTION: The defogger wire of the 4 RUNNER can not be repaired. If defogger wire is broken, replace the back door window glass assembly.

1. CLEAN BROKEN WIRE WITH WHITE GASOLINE

2. PLACE MASKING TAPE ALONG BOTH SIDES OF WIRE TO BE REPAIRED

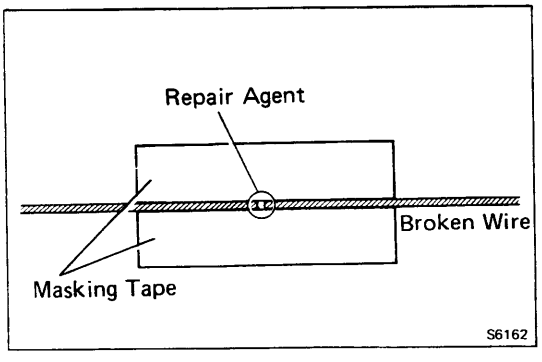

3. REPAIR DEFOGGER WIRES

(a) Thoroughly mix the repair agent (Dupont paste No. 4817).

(b) Using a fine tip brush, apply a small amount to the wire.

(c) After a couple of minutes, remove the masking tape.

(d) Allow to stand at least 24 hours.

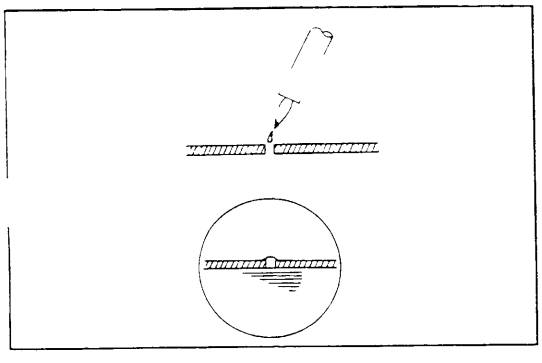

HEATER

Troubleshooting

Problem	Possible cause	Remedy	Page	
			Front	Rear
Blower does not work when fan switch is on	HEATER fuse blown	Replace fuse and check for short	BE-3	BE-3
	Heater relay faulty	Check relay	BE-32	BE-34
	Heater blower switch faulty	Check switch	BE-32	BE-34
	Heater blower resistor faulty	Check resistor	BE-33	BE-35
	Heater blower motor faulty	Replace motor		
	Wiring or ground faulty	Repair as necessary		
Incorrect temperature output	Control cables broken or binding	Check cables	BE-33	
	Heater hoses leaking or clogged	Replace hose		
	Water valve faulty	Replace valve		
	Air dampers broken	Repair dampers		
	Air ducts clogged	Repair ducts		
	Heater radiator leaking or clogged	Replace radiator		
	Heater control unit faulty	Repair control unit		

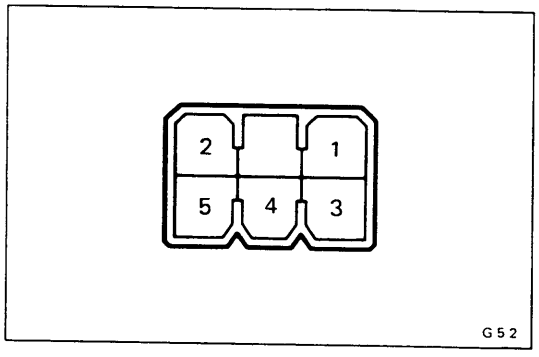

Heater Blower Switch

INSPECTION OF HEATER BLOWER SWITCH

INSPECT SWITCH CONTINUITY

Inspect heater blower switch continuity.

Switch position \ Terminal	4	5	1	2
OFF	○			
LO	○	○		
•	○	○	○	
HI	○	○		○

If continuity is not as specified, replace the switch.

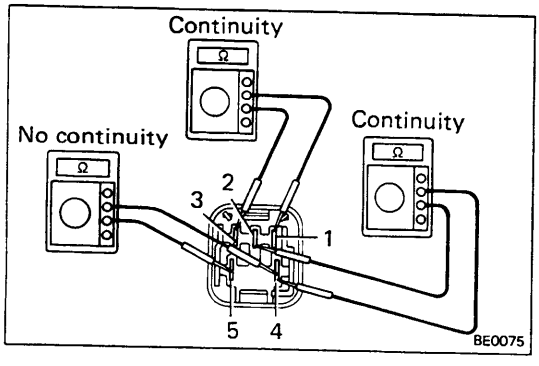

Heater Relay

INSPECTION OF HEATER RELAY

1. **INSPECT RELAY CONTINUITY**

   (a) Check that there is continuity between terminals 1 and 3.

   (b) Check that there is continuity between terminals 2 a. 4.

   (c) Check that there is no continuity between terminals 4 and 5.

   If continuity is not as specified, replace the relay.

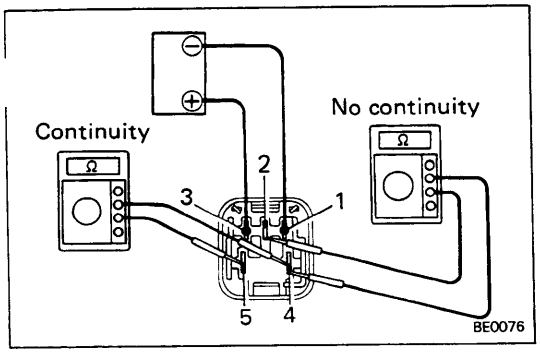

2. INSPECT RELAY OPERATION

(a) Apply battery voltage across terminals 1 and 3.

(b) Check that there is continuity between terminals 4 and 5.

(c) Check that there is no continuity between terminals 2 and 4.

If operation is not as specified, replace the relay.

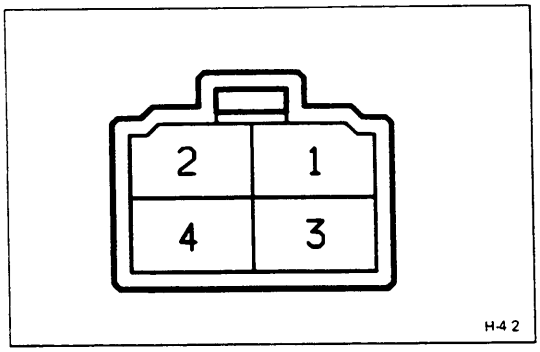

Heater Blower Resistor

INSPECTION OF HEATER BLOWER RESISTOR

INSPECT RESISTOR CONTINUITY

(a) Check that there is continuity between terminals 1 and 2.

(b) Check that there is continuity between terminals 1 and 3.

If continuity is not as specified, replace the resistor.

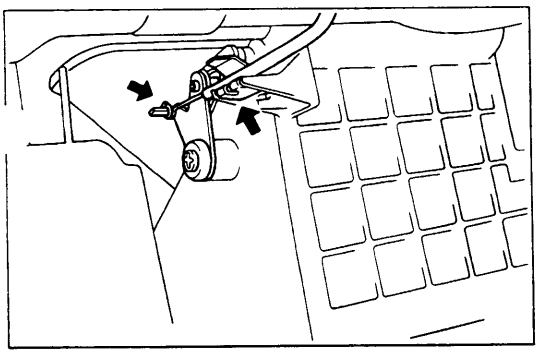

Heater Control

ADJUSTMENT OF HEATER CONTROL

SET AIR INLET DAMPER

Set the air inlet damper and control lever to "Fresh Air".

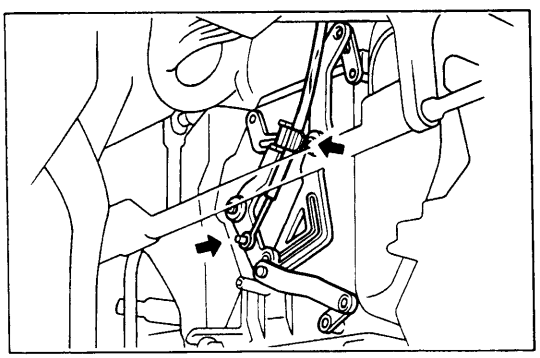

SET MODE SELECTOR DAMPER

Set the mode selector damper and control lever to "Vent".

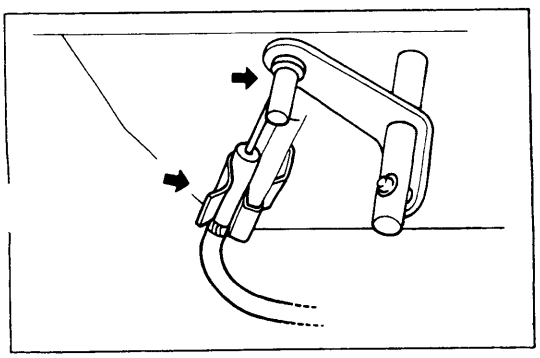

SET AIR MIX DAMPER

Set the air mix damper and control lever to "Cool".

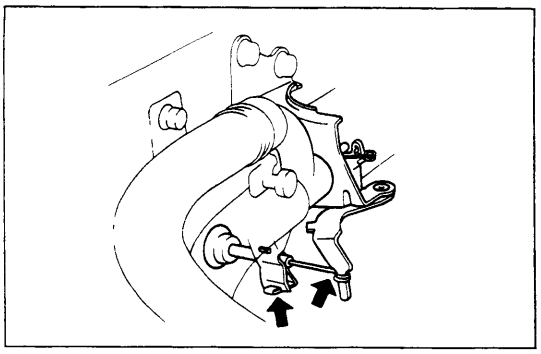

SET WATER VALVE

Set the water valve and control lever to "Cool".

TEST CONTROL CABLE OPERATION

Move the control levers left and right and check for stiffness and binding through full range of the levers.

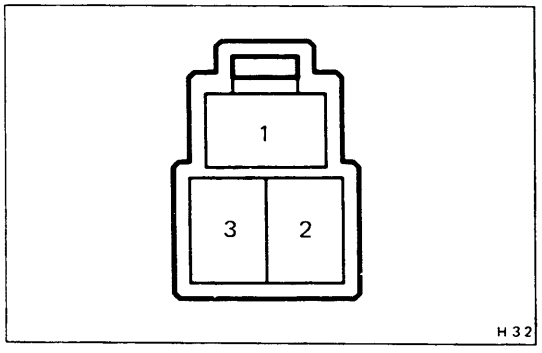

Rear Heater Blower Switch

INSPECTION OF REAR HEATER BLOWER SWITCH

INSPECT SWITCH CONTINUITY

Inspect the switch continuity between terminals.

Switch position \ Terminal	1	2	3
HI	○	○	○
OFF			
LO	○	○	

If continuity is not as specified, replace the switch.

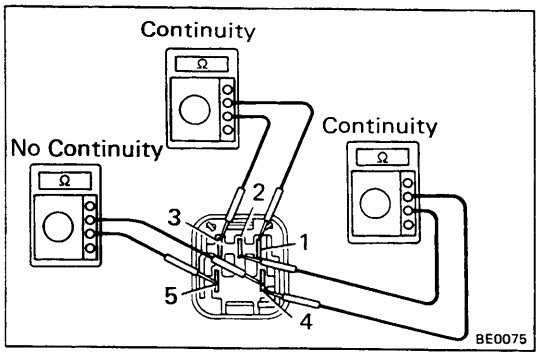

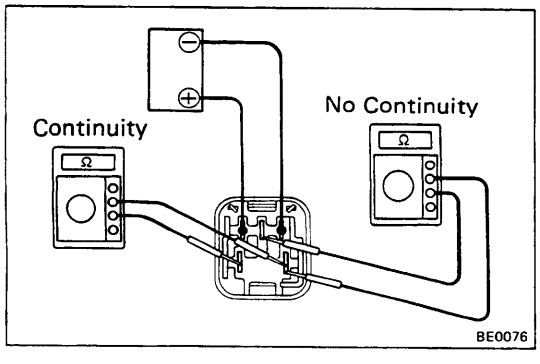

Rear Heater Relay

INSPECTION OF REAR HEATER RELAY

1. INSPECT RELAY CONTINUITY

(a) Check that there is continuity between terminals 1 and 3.

(b) Check that there is continuity between terminals 2 and 4.

(c) Check that there is no continuity between terminals 4 and 5.

If continuity is not as specified, replace the relay.

2. INSPECT RELAY OPERATION

(a) Apply the battery voltage across terminals 1 and 3.

(b) Check that there is continuity between terminals 4 and 5.

(c) Chekc that there is no continuity between terminals 2 and 4.

If operation is not as specified, replace the relay.

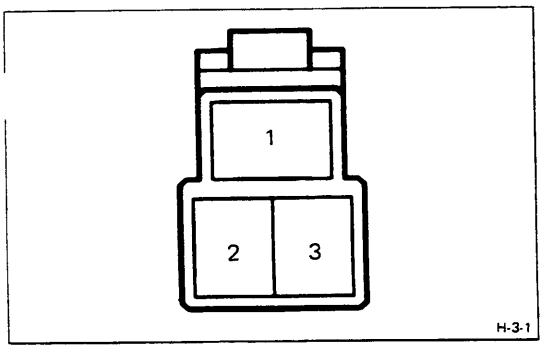

Rear Heater Blower Resistor

INSPECTION OF REAR HEATER BLOWER RESISTOR

INSPECT RESISTOR CONTINUITY

Check that there is continuity between terminals 1 and 2.

If continuity is not as specified, replace the resistor.

CRUISE CONTROL SYSTEM

Wiring Diagram

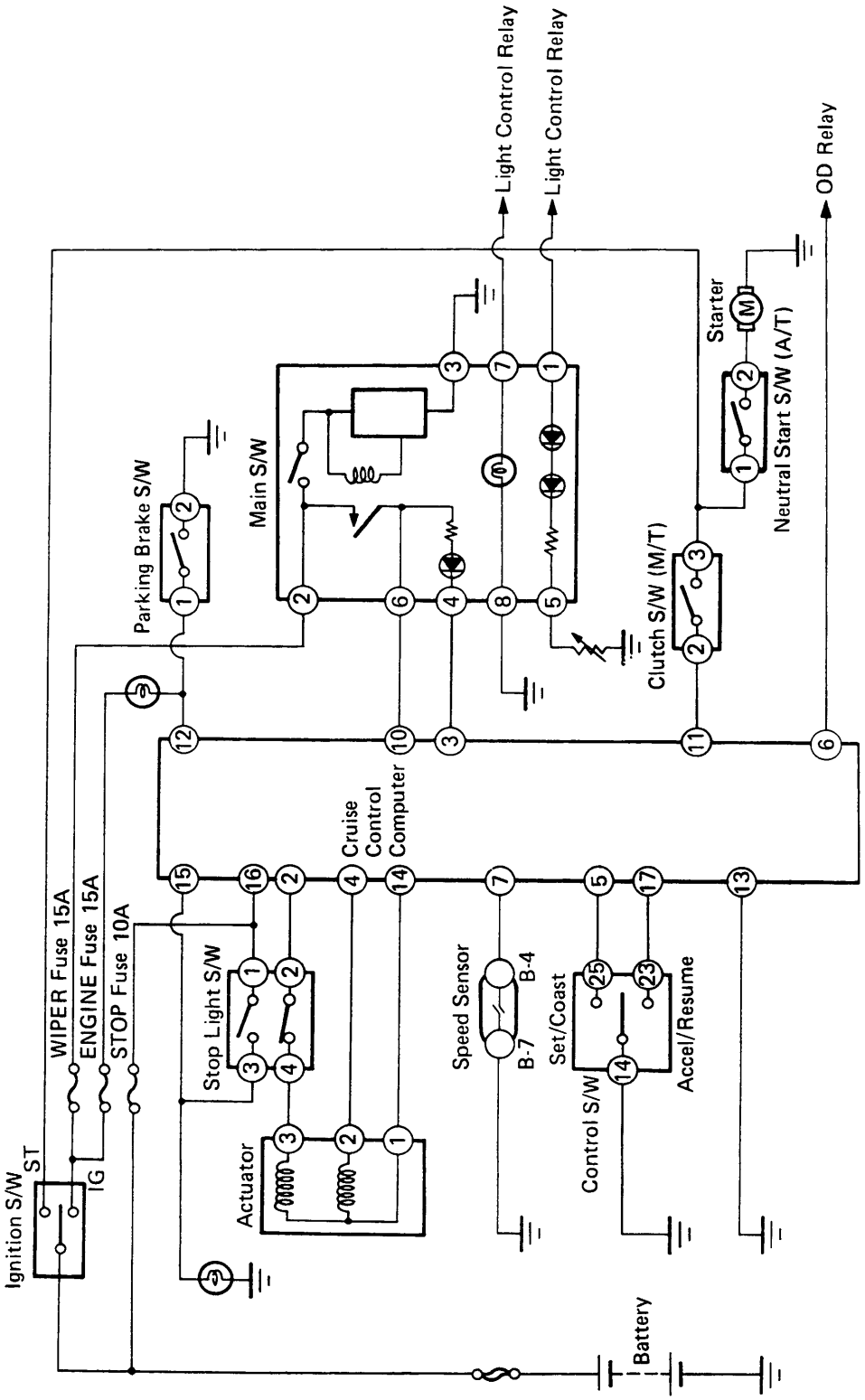

BE0514

Connectors

Cruise Control Computer

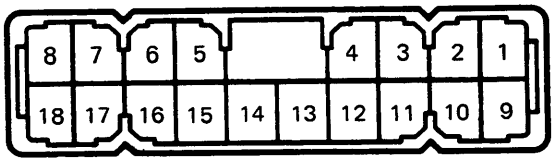

Main Switch

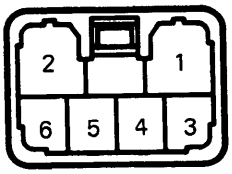

Actuator

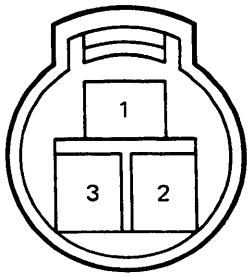

Control Switch

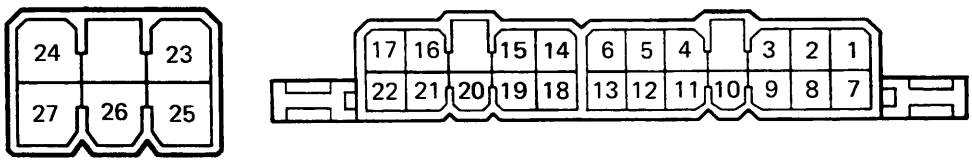

Neutral Start Switch

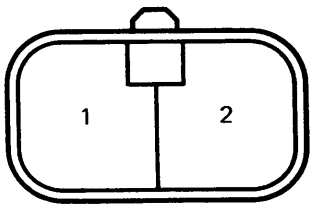

Clutch Switch

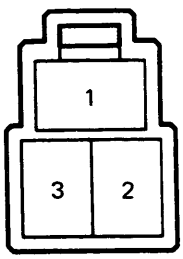

Parking Brake Switch

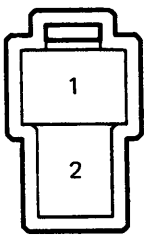

Stop Light Switch

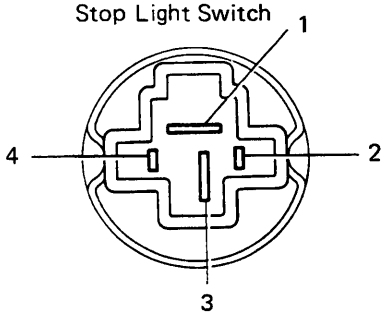

Combination Meter (w/ Tachometer)

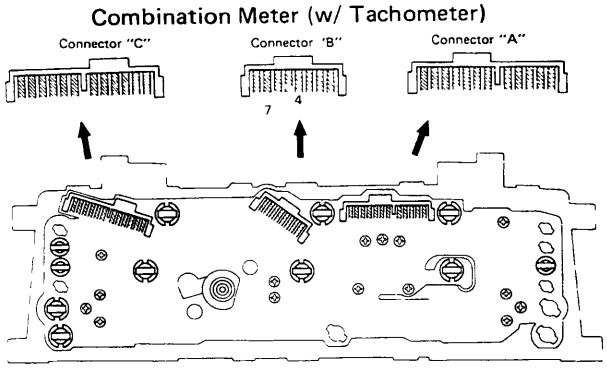

Combination Meter (w/o Tachometer)

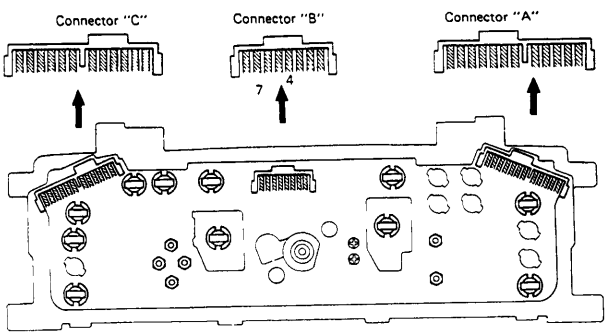

BE0208
BE0210

Diagnosis System

OUTPUT OF DIAGNOSIS CODES

1. INDICATE TYPE A CODE

(a) Turn the ignition switch on.
(b) Turn the set/coast switch on, and keep it.
(c) Turn the main switch on.
(d) Meet the conditions listed below.
(e) Read the diagnosis code on the main switch indicator.

No.	Conditions	Indicator code	Diagnosis
1	Set/coast switch on	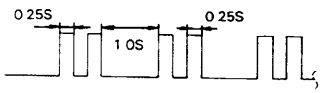	Set/cost switch circuit is normal.
2	Accel/resume switch on	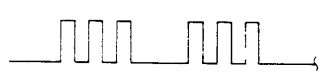	Accel/resume switch circuit is normal.
3	Each cancel switch on (Stop light switch, Parking brake switch, Clutch switch, Neutral start switch)	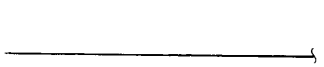	Each cancel switch circuit is normal.
4	Drive 33 km/h (21 mph) or over		Speed sensor circuit is normal
5	Drive 33 km/h (21 mph) or below	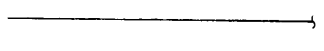 BE0267	Speed sensor circuit is normal.

NOTE: Indicator codes appear in order from No. 1.

If there is no indicator code, perform diagnosis and inspection. (See page BE-40)

B10687

2. INDICATE TYPE B CODE

(a) Do not turn the ignition switch and main switch off.

(b) Turn the set/coast switch on three times within two seconds.

(c) Read the diagnosis code on the main switch indicator.

No.	Indicator code	Diagnosis
	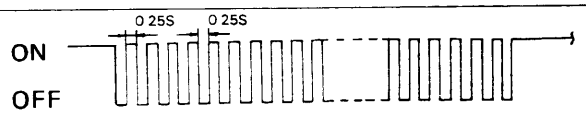	Normal
11	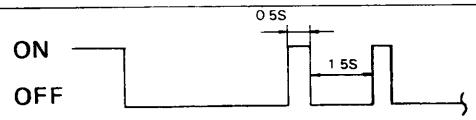	Actuator circuit is abnormal.
21	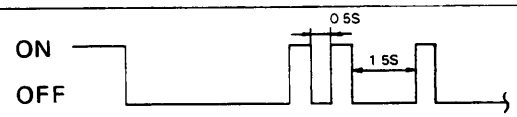	Speed sensor signal circuit is abnormal.
23	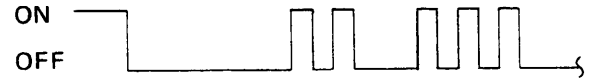	Speed sensor signal circuit is abnormal.
31		Accel/resume switch circuit is abnormal.
33	 BE0426	Accel/resume switch and set/coast switch circuit is abnormal.

NOTE:

- Indication codes appear with priority from No. 11.
- Normal code continues 20 seconds and abnormal codes are repeated three times.
- Indication is stopped when vehicle speed is over 16 km/h (10 mph) or main switch is turned off.
- If there is no indication code, perform diagnosis and inspection. (See page BE-40)

B10688

3. INSPECT DIAGNOSIS CIRCUIT

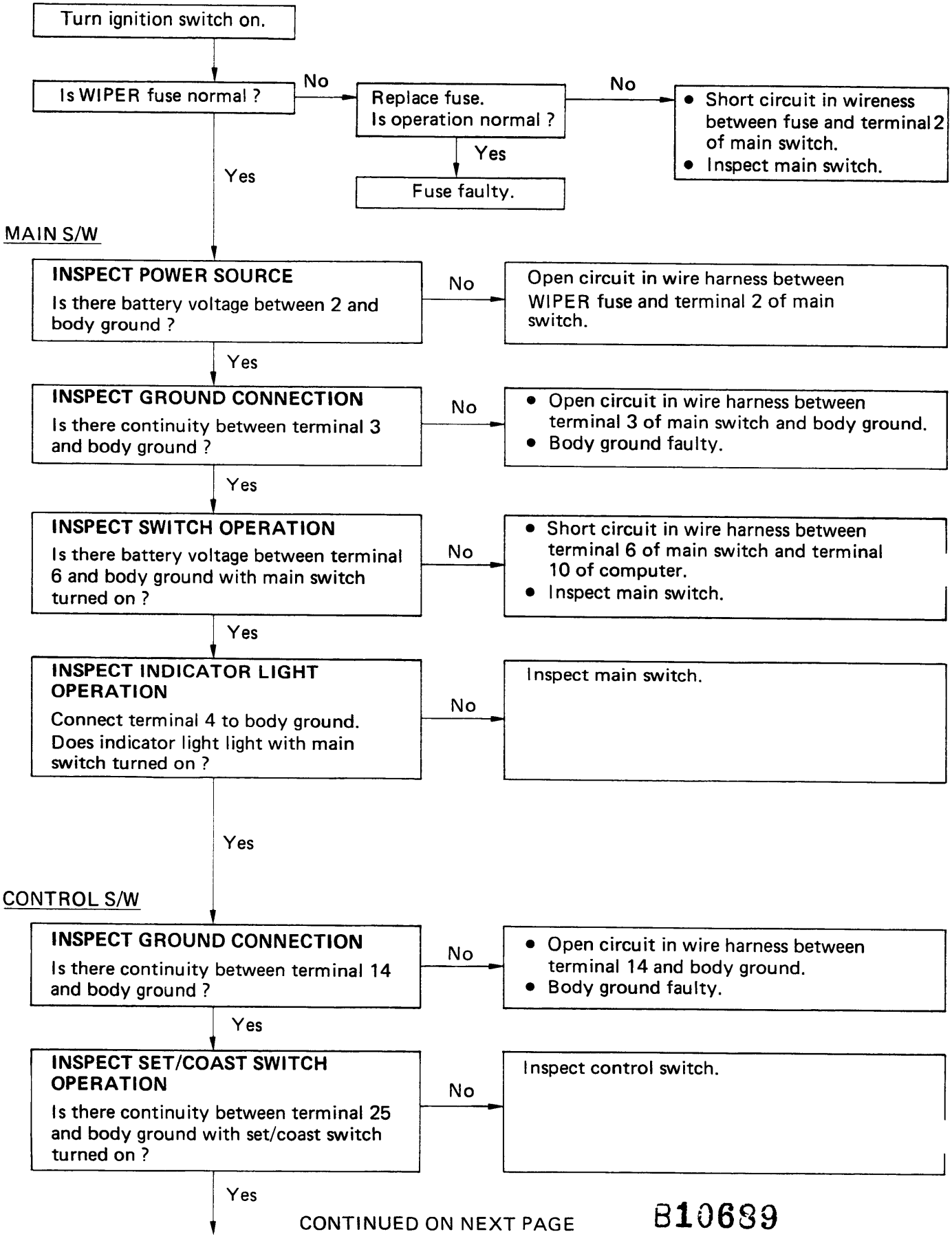

CONTINUED ON NEXT PAGE

B10699

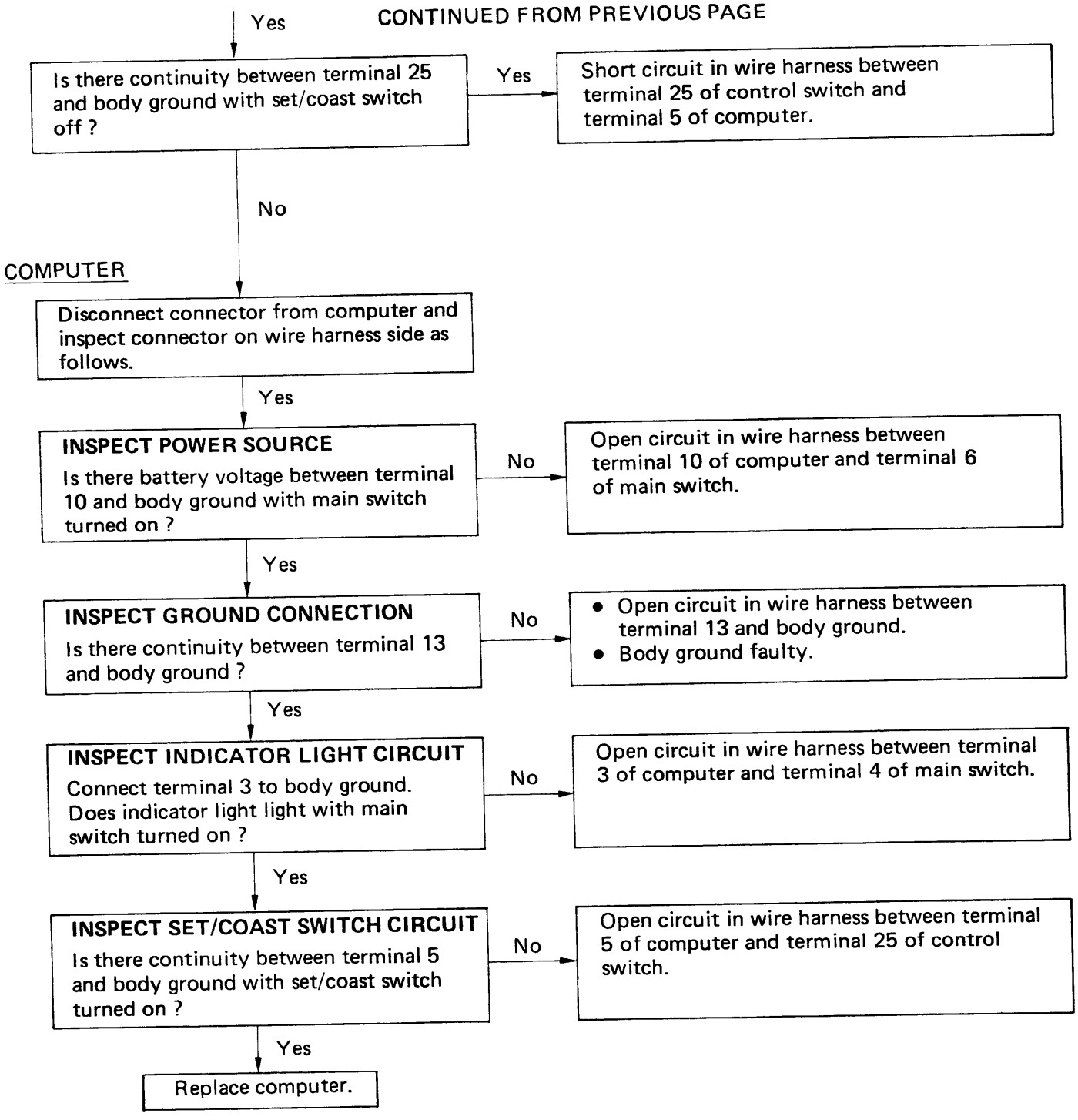
Yes
CONTINUED FROM PREVIOUS PAGE
Is there continuity between terminal 25 and body ground with set/coast switch off ?
Yes
Short circuit in wire harness between terminal 25 of control switch and terminal 5 of computer.
No
COMPUTER
Disconnect connector from computer and inspect connector on wire harness side as follows.
Yes
INSPECT POWER SOURCE
Is there battery voltage between terminal 10 and body ground with main switch turned on ?
No
Open circuit in wire harness between terminal 10 of computer and terminal 6 of main switch.
Yes
INSPECT GROUND CONNECTION
Is there continuity between terminal 13 and body ground ?
No
• Open circuit in wire harness between terminal 13 and body ground.
• Body ground faulty.
Yes
INSPECT INDICATOR LIGHT CIRCUIT
Connect terminal 3 to body ground. Does indicator light light with main switch turned on ?
No
Open circuit in wire harness between terminal 3 of computer and terminal 4 of main switch.
Yes
INSPECT SET/COAST SWITCH CIRCUIT
Is there continuity between terminal 5 and body ground with set/coast switch turned on ?
No
Open circuit in wire harness between terminal 5 of computer and terminal 25 of control switch.
Yes
Replace computer.

TROUBLESHOOTING

Symptom	Inspection Area		Section
Cruise control cannot be set.	(a) Inspect type A code.	No. 1 NO	A
		No. 2 NO	B
		No. 3 NO	C
		No. 4 NO	D
		No. 5 NO	D
	(b) Inspect type B code.	11	E
		21	D
		23	F
		31	B
		33	A and B
	(c) All codes are normal.		Replace Computer
Vehicle speed does not reduce when coast switch turned on.	Inspect No. 1 of type A code.	OK	F
		NO	A
Vehicle does not accelerate when accel switch turned on.	Inspect No. 2 of type A code.	OK	F
		NO	B
Vehicle speed does not return to memorized speed when resume switch turned on.	Inspect No. 2 of type A code.	OK	F
		NO	B
Set speed deviates on high side.	Inspect No. 1 of type A code.	OK	F
Set speed deviates on low side.		NO	A
Vehicle speed fluctuates when set switch turned on.	Inspect No. 1 of type A code.	OK	F
		NO	A
Setting speed does not cancel when brake pedal depressed.	Inspect No. 3 of type A code.	OK	F
		NO	C
Setting speed does not cancel when parking brake pulled.	Inspect No. 3 of type A code.	OK	F
		NO	C
Setting speed does not cancel when clutch pedal depressed (M/T only).	Inspect No. 3 of type A code.	OK	F
		NO	C
Setting speed does not cancel when shifted to "N" range (A/T only).	Inspect No. 3 of type A code.	OK	F
		NO	C
Speed can be set below 33 km/h (21 mph).	Inspect No. 4 of type A code.	OK	F
		NO	D
Cruise control will not disengage even below 33 km/h (21 mph).	Inspect No. 5 of type A code.	OK	F
		NO	D

A INSPECTION OF SET/COAST SWITCH CIRCUIT

COMPUTER

INSPECT SET/COAST SWITCH CIRCUIT
Disconnect connector from computer.
Is there continuity between terminal 5 and body ground with set/coast switch turned off ?

Yes → • Short circuit in wire harness between terminal 5 of computer and terminal 25 of control switch.
• Inspect control switch.

No → Replace computer.

B INSPECTION OF ACCEL/RESUME SWITCH CIRCUIT

CONTROL S/W

INSPECT ACCEL/RESUME SWITCH OPERATION
Is there continuity between terminal 23 and body ground with accel/resume switch turned off ?

Yes → • Short circuit in wire harness between terminal 23 of control switch and terminal 17 of computer.
• Inspect control switch.

No → Is there continuity between terminal 23 and body ground with accel/resume switch turned on ?

No → Inspect control switch.

Yes →

COMPUTER

INSPECT ACCEL/RESUME SWITCH CIRCUIT
Disconnect connector from computer.
Is there continuity between terminal 17 and body ground with accel/resume switch turned on ?

No → Open circuit in wire harness between terminal 17 of computer and terminal 23 of control switch.

Yes → Replace computer.

C INSPECTION CANCEL SWITCH CIRCUIT

1. INSPECT STOP LIGHT SWITCH CIRCUIT

Turn ignition switch on.

COMPUTER

INSPECT STOP LIGHT SWITCH CIRCUIT
Disconnect connector from computer.
Is there battery voltage between terminal 15 and body ground with brake pedal depressed ?

No → Open circuit in wire harness between terminal 15 of computer and terminal 3 of stop light switch.

Yes

Is there battery voltage between terminal 16 and body ground ?

No → Open circuit in wire harness between terminal 16 of computer and terminal 1 of stop light switch.

Yes

Replace computer.

2. INSPECT PARKING BRAKE SWITCH CIRCUIT

COMPUTER

INSPECT PARKING BRAKE SWITCH CIRCUIT
Disconnect connector from computer.
Is there continuity between terminal 12 and body ground with parking brake lever pulled ?

No → Open circuit in wire harness between terminal 12 of computer and terminal 1 of parking brake switch.

Yes

Replace computer.

3. INSPECT CLUTCH SWITCH CIRCUIT (M/T)

CLUTCH S/W

INSPECT GROUND CONNECTION
Is there continuity between terminal 3 and body ground ?

No → • Open circuit in wire harness between terminal 3 and body ground.
• Body ground faulty.

Yes ↓

INSPECT CLUTCH SWITCH CONTINUITY
Is clutch switch normal ?
(See page BE-50)

No → Replace clutch switch.

Yes ↓

COMPUTER

INSPECT CLUTCH SWITCH CIRCUIT
Disconnect connector from computer.
Is there continuity between terminal 11 and body ground with clutch pedal depressed ?

No → Open circuit in wire harness between terminal 11 of computer and terminal 2 of clutch switch.

Yes ↓

Is there continuity between terminal 11 and body ground with clutch pedal returned ?

Yes → Short circuit in wire harness between terminal 11 of computer and terminal 2 of clutch switch.

No ↓

Replace computer.

4. INSPECT NEUTRAL START SWITCH CIRCUIT (A/T)

COMPUTER

INSPECT NEUTRAL START SWITCH CIRCUIT
Disconnect connector from computer.
Is there continuity between terminal 11 and body ground with neutral start switch turned to N range ?

No → Open circuit in wire harness between terminal 11 of computer and terminal 1 of neutral start switch.

Yes ↓

Replace computer.

D INSPECTION OF SPEED SENSOR CIRCUIT

SPEED SENSOR

INSPECT GROUND CONNECTION
Disconnect combination meter.
Is there continuity between terminal B-7 of wire harness side and body ground ?

No →
- Open circuit in wire harness between terminal B-7 of combination meter and body ground.
- Body ground faulty.

Yes ↓

INSPECT SPEED SENSOR OPERATION
Is speed sensor normal ?
(See page BE-51)

No → Replace speed sensor.

Yes ↓

COMPUTER

INSPECT SPEED SENSOR CIRCUIT
Disconnect connector from computer and combination meter.
Is there continuity between terminal 7 and body ground ?

Yes → Short circuit in wire harness between terminal 7 of computer and terminal B-4 of combination meter.

No ↓

Is there continuity between terminal 7 of computer and terminal B-4 of combination meter ?

No → Open circuit in wire harness between terminal 7 of computer and terminal B-4 of combination meter.

Yes ↓

Replace computer.

B10695

E INSPECTION OF ACTUATOR OPERATION

ACTUATOR

INSPECT ACTUATOR OPERATION
Remove actuator.
Is actuator normal ?
(See page BE-51)

No → Replace actuator.

Yes → Replace computer.

F INSPECTION OF ACTUATOR CIRCUIT

ACTUATOR

INSPECT ACTUATOR OPERATION
Remove actuator.
Is actuator normal ?
(See page BE-51)

No → Replace actuator.

Yes

STOP LIGHT S/W

INSPECT STOP LIGHT SWITCH OPERATION
Is stop light switch normal ?
(See page BE-50)

No → Replace stop light switch.

Yes

COMPUTER

Disconnect connector from computer and inspect connector on wire harness as follows.

INSPECT RELEASE VALVE CIRCUIT
Disconnect actuator.
Is there continuity between terminal 2 and body ground ?

Yes → Short circuit in wire harness between terminal 2 of computer and terminal 3 of actuator.

No

CONTINUED FROM PREVIOUS PAGE

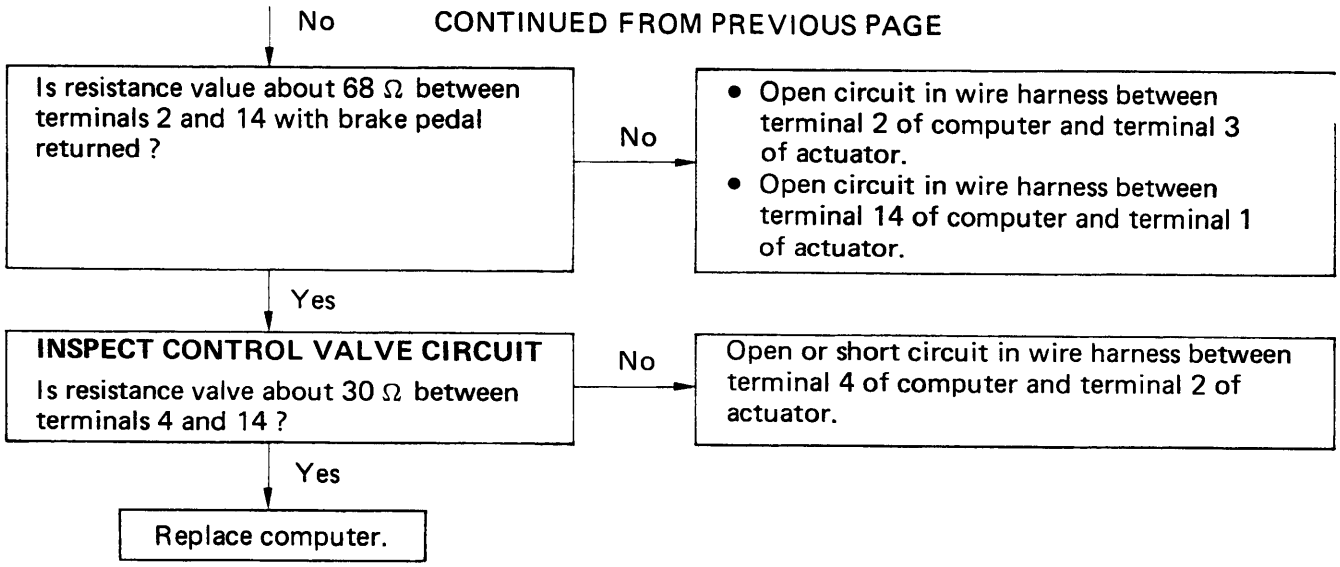
No
CONTINUED FROM PREVIOUS PAGE
Is resistance value about 68 Ω between terminals 2 and 14 with brake pedal returned ?
No
• Open circuit in wire harness between terminal 2 of computer and terminal 3 of actuator.
• Open circuit in wire harness between terminal 14 of computer and terminal 1 of actuator.
Yes
INSPECT CONTROL VALVE CIRCUIT
Is resistance valve about 30 Ω between terminals 4 and 14 ?
No
Open or short circuit in wire harness between terminal 4 of computer and terminal 2 of actuator.
Yes
Replace computer.

Cruise Control Computer Circuit

INSPECTION OF COMPUTER CIRCUIT

Disconnect the computer and inspect the connector on the wire harness side as shown in the chart below.

Terminal	Connection or Measure item	Check item	Tester connection	Condition	Voltage or Resistance value
2	Stop Light Switch and Release Valve	Resistance	2 – 14	Brake pedal returned	About 68Ω
3	Main Switch	Voltage	3 – Body Ground	Turn ignition switch and main switch on	Battery voltage
				Turn ignition switch and/or main switch off	No voltage
4	Control Valve	Resistance	4 – 14	–	About 30Ω
5	Control/Switch (set/coast)	Continuity	5 – Body Ground	Turn set/coast switch on	Continuity
				Turn set/coast switch off	No continuity
6	OD relay	–	–	–	–
7	Speed Sensor	Continuity	7 – Body Ground	Vehicle moving slowly	1 pulse each 40 cm (15.75 in.)
10	Main Switch	Voltage	10 – Body Ground	Turn ignition switch and main switch on	Battery voltage
				Turn ignition switch and/or main switch off	No voltage
11	Clutch Switch (M/T) or Neutral Start Switch (A/T)	Continuity	11 – Body Ground	Clutch pedal depressed or shifted into "N" range	Continuity
				Clutch pedal returned or shifted into only range except "N" range	No continuity
12	Parking Brake Switch	Voltage	12 – Body Ground	Parking brake pulled	No voltage
				Parking brake returned	Battery voltage
13	Body Ground	Continuity	13 – Body Ground	–	Continuity
14	Release Valve and Control Valve	–	–	–	–
15	Stop Light Switch	Voltage	15 – Body Ground	Brake pedal depressed	Battery voltage
				Brake pedal returned	No voltage
16	STOP Fuse	Voltage	16 – Body Ground	–	Battery voltage
17	Control Switch (accel/resume)	Continuity	17 – Body Ground	Turn accel/resume switch on	Continuity
				Turn accel/resume switch off	No continuity

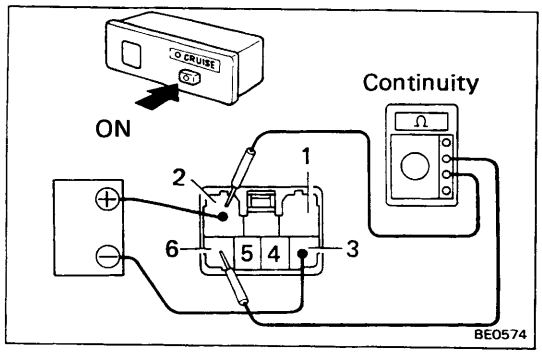

Main Switch

INSPECTION OF MAIN SWITCH

1. INSPECT SWITCH CONTINUITY

Connect the positive (+) lead from battery to terminal 2.
Connect the negative (–) lead to terminal 3.

(a) Check that there is continuity between terminals 2 and 6 with the main switch turned on.

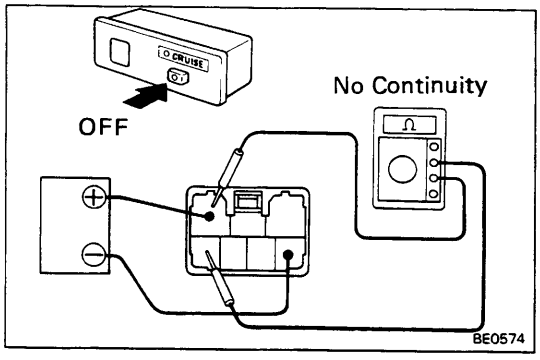

(b) Check that there is no continuity between terminals 2 and 6 with the main switch turned off.

If continuity is not as specified, replace the switch.

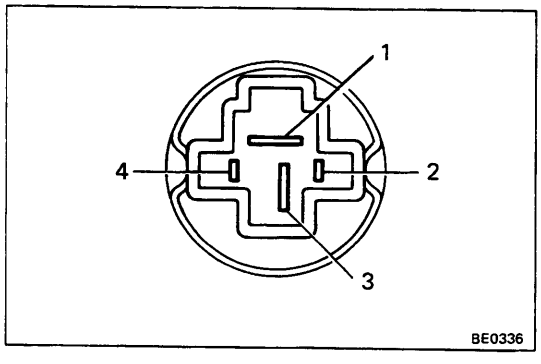

Stop Light Switch

INSPECTION OF STOP LIGHT SWITCH

INSPECT SWITCH CONTINUITY

Inspect the switch continuity between terminals.

Brake pedal position \ Terminal	1	3	2	4
Brake pedal depressed	○——	——○		
Brake pedal returned			○——	——○

If continuity is not as specified, replace the switch.

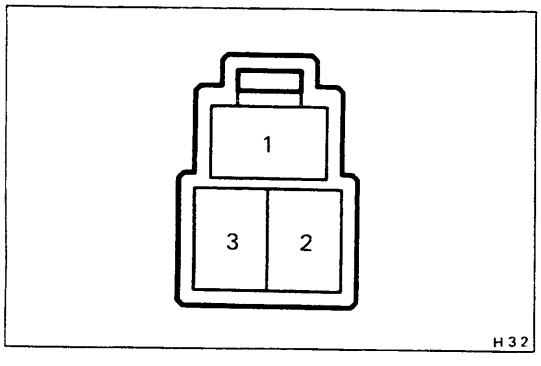

Clutch Switch

INSPECTION OF CLUTCH SWITCH

INSPECT SWITCH CONTINUITY

(a) Check that there is continuity between terminals 2 and 3 with the clutch pedal depressed.

(b) Check that there is no continuity between terminals 2 and 3 with the clutch pedal returned.

If continuity is not as specified, replace the switch.

Control Switch

(See page BE-11)

Neutral Start Switch

(See page AT-92)

Parking Brake Switch

(See page BE-29)

Speed Sensor

(See page BE-37)

INSPECTION OF SPEED SENSOR

INSPECT SENSOR CONTINUITY

Check that there is continuity between terminals 4 of connector "B" and terminal 7 of connector "B" four times per each revolution of the shaft.

If continuity is not as specified, replace the sensor.

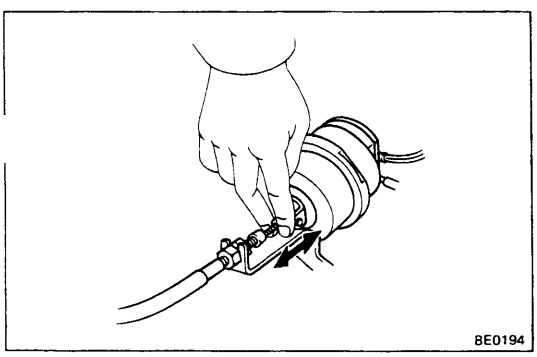

Actuator

INSPECTION OF ACTUATOR

1. **INSPECT CONTROL CABLE FREEPLAY**

Inspect that the control cable freeplay is less than 10 mm (0.39 in.).

If necessary, adjust the control cable freeplay.

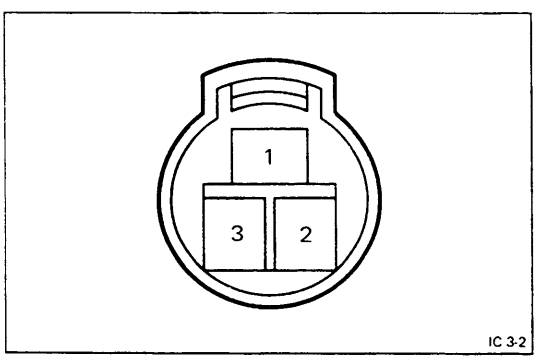

2. **INSPECT ACTUATOR RESISTANCE**

Using an ohmmeter, measure the resistance value between terminals as follows.

Resistance: 1 – 2 about 30 Ω
1 – 3 about 68 Ω

If the resistance value is not as specified, replace the actuator.

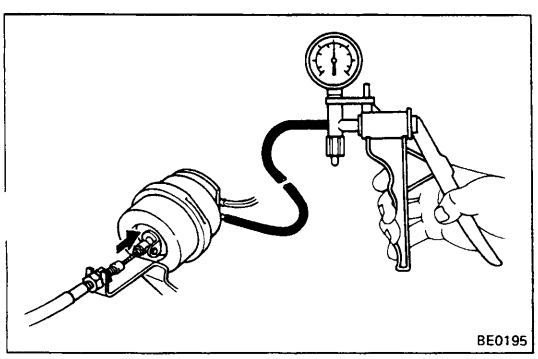

3. **INSPECT ACTUATOR OPERATION**

Connect the positive (+) lead from the battery to terminals 2 and 3. Connect the negative (–) lead to terminal 1.

(a) Slowly apply vacuum from 0 – 300 mmHg (0 – 11.81 in.Hg, 0 – 40.0 kPa), and check that the control cable can be pulled smoothly.

(b) With the vacuum stabilized, check that the control cable does not return.

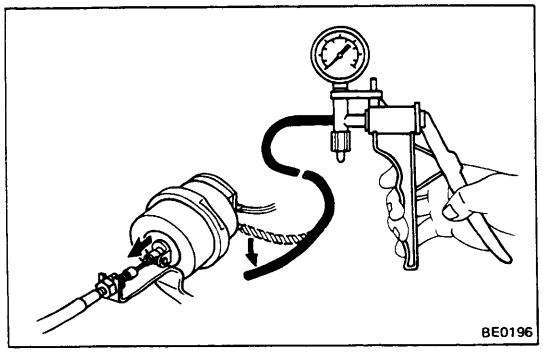

(c) Disconnect terminal 2 or 3 and check that the control cable returns to its original position and the vacuum returns to 0 mmHg (0 in.Hg, 0 kPa).

If operation is not as specified, replace the actuator.

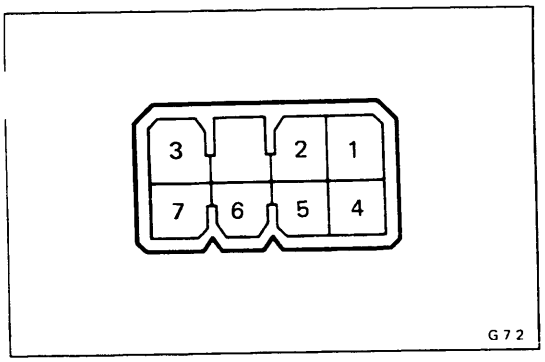

POWER WINDOW

Power Window Master Switch

INSPECTION OF MASTER SWITCH

INSPECT SWITCH CONTINUITY

Inspect the switch continuity between terminals.

Window Switch	Front · Left				Front · Right			
Terminal / Switch position	2	1	6	4	2	3	6	7
DOWN	○—○		○—○		○—○		○—○	
OFF		○—○	○—○			○—○	○—○	
UP	○	○—○		○	○	○—○		○

If continuity is not as specified, replace the switch.

Power Window Door Switch

INSPECTION OF DOOR SWITCH

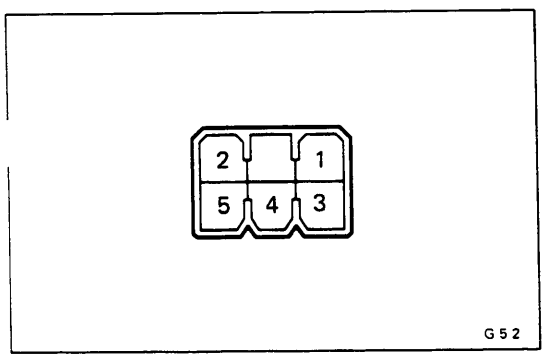

INSPECT SWITCH CONTINUITY

Inspect the switch continuity between terminals.

Terminal / Switch position	1	2	3	4	5
UP	○—○			○—○	
OFF	○		○—○	○	○—○
DOWN	○	○—○	○		○

If continuity is not as specified, replace the switch.

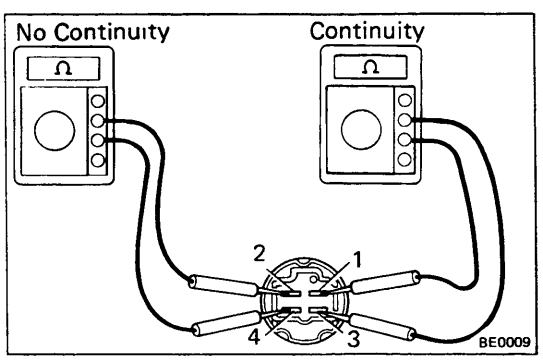

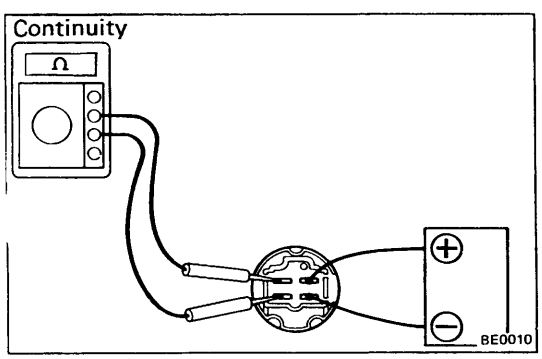

Power Main Relay

INSPECTION OF MAIN RELAY

1. **INSPECT RELAY CONTINUITY**
   (a) Check that there is continuity between terminals 1 and 3.
   (b) Check that there is no continuity between terminals 1 and 4.
   (c) Check that there is no continuity between terminals 2 and 4.

   If continuity is not as specified, replace the relay.

2. **INSPECT RELAY OPERATION**
   (a) Apply battery voltage across terminals 1 and 3.
   (b) Check that there is continuity between terminals 2 and 4.
   (c) Check that there is no continuity between terminals 2 and 3.

   If operation is not as specified, replace the relay.

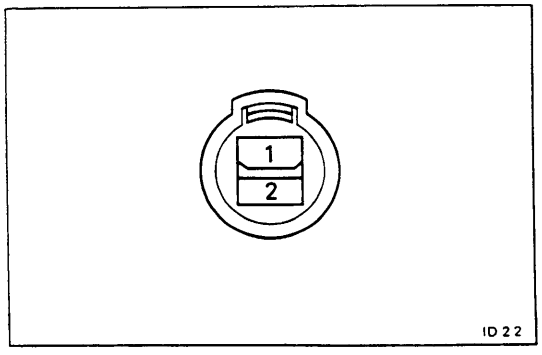

Power Window Motor

INSPECTION OF MOTOR

INSPECT MOTOR OPERATION

(a) Connect the positive (+) lead from the battery to terminal 1 and the negative (—) lead to terminal 2, and check that the motor turns.

(b) Connect the positive (+) lead from the battery to terminal 2 and the negative (—) lead to terminal 1, and check that the motor turns in reverse.

If operation is not as specified, replace the motor.

BACK DOOR POWER WINDOW

Wiring Diagram

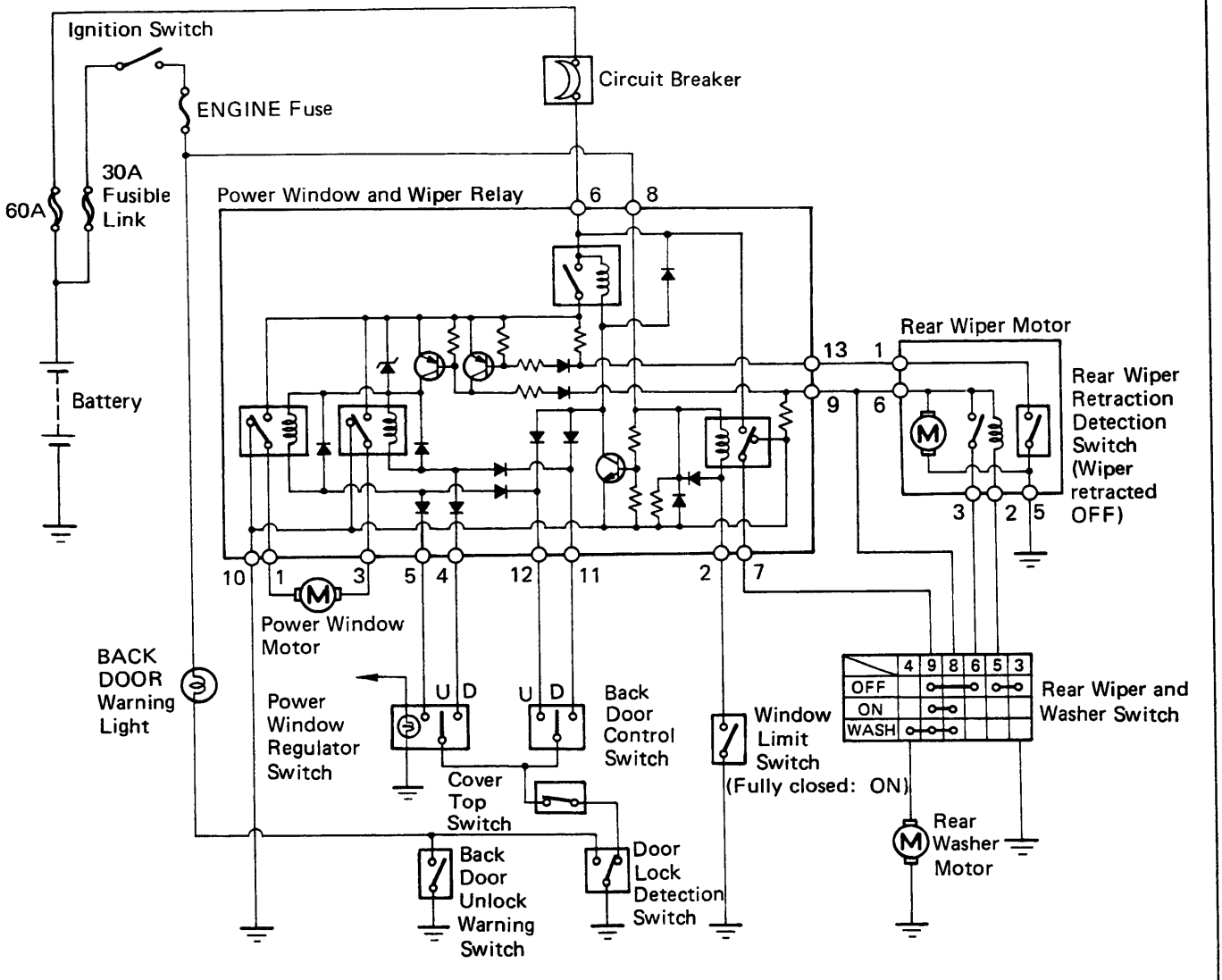

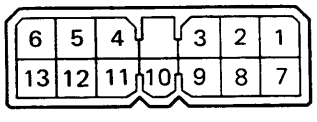

Power Window and Wiper Relay



Door Lock Detection Switch

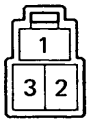

Cover Top Switch



Power Window Motor

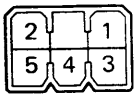

Power Window Regulator Switch

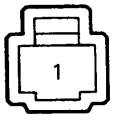

Back Door Unlock Warning Switch

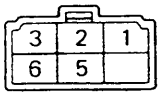

Rear Wiper Retraction Detection Switch

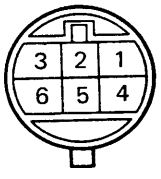

Back Door Control Switch

BE0216

Troubleshooting

Problem	Possible cause	Remedy	Page
Power window does not work	Fusible link blown	Replace fusible link	
	Circuit breaker OFF	Reset breaker and check for short	BE-4
	ENGINE fuse blown	Replace fuse and check for short	BE-3
	Power window and wiper relay faulty	Check relay	BE-58
	Power window regulator switch faulty	Check switch	BE-56
	Back door control switch faulty	Check switch	BE-57
	Cover top switch faulty	Check switch	BE-57
	Door lock detection switch faulty	Check switch	BE-57
	Power window motor faulty	Check motor	BE-58
	Rear wiper retraction detection switch faulty	Check switch	BE-58
	Wiring or ground faulty	Repair as necessary	
BACK DOOR warning light does not light (Ignition switch ON)	ENGINE fuse blown	Replace fuse and check for short	BE-3
	Light bulb burned out	Replace bulb	
	Door lock detection switch faulty (Back door opened)	Check switch	BE-57
	Back door unlock warning switch faulty (Back door unlocked)	Check switch	BE-58
	Wiring or ground faulty	Repair as necessary	

Back Door Warning Light

INSPECTION OF WARNING LIGHT

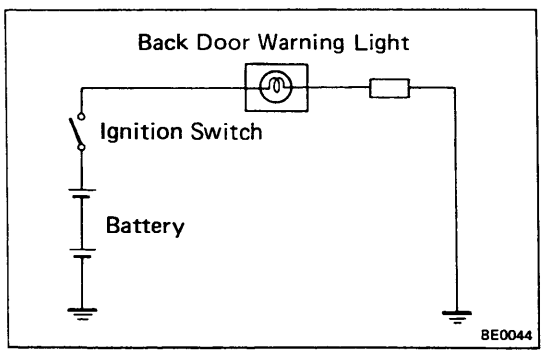

INSPECT WARNING LIGHT OPERATION

Disconnect the connector from the back door unlock warning switch. Connect the wire harness side connector and body ground. Turn the ignition switch on. Check that the bulb lights.

If operation is not as specified, remove and test the bulb.

Power Window Regulator Switch

INSPECTION OF REGULATOR SWITCH

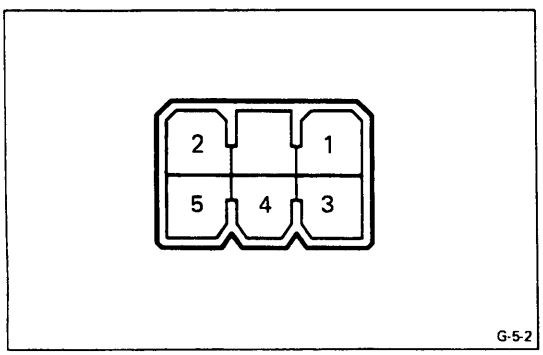

INSPECT SWITCH CONTINUITY

Inspect the switch continuity between terminals.

Terminal / Switch position	1	2	5	3 *	4 *
UP		○—○		○	○
OFF				○	○
DOWN	○	○		○	○

*For illumination light

If continuity is not as specified, replace the switch.

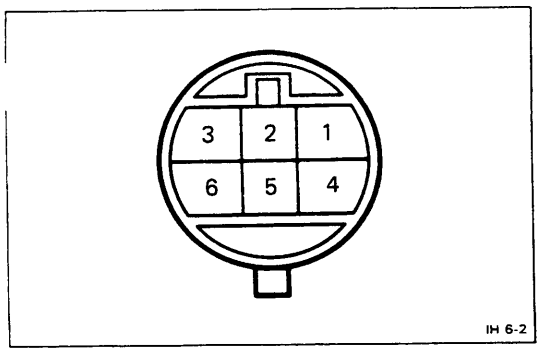

Back Door Control Switch

INSPECTION OF CONTROL SWITCH

INSPECT SWITCH CONTINUITY

Inspect the switch continuity between terminals.

Switch position \ Terminal	1	2	3
UP (Left)	○	○	
OFF			
DOWN (Right)	○		○

If continuity is not as specified, replace the switch.

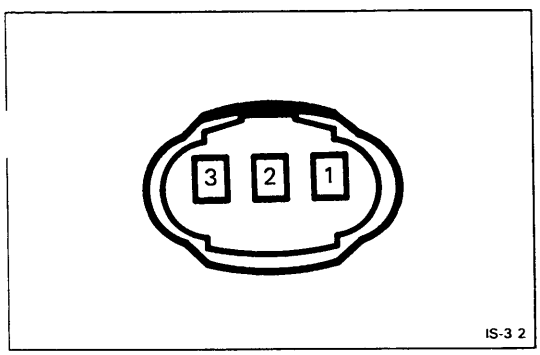

Door Lock Detection Switch

INSPECTION OF LOCK DETECTION SWITCH

INSPECT SWITCH CONTINUITY

Inspect the switch continuity between terminals.

Switch position \ Terminal	1	2	3
Unlock (Back door opened)	○	○	
Locked (Back door closed)	○		○

NOTE: When the locked position, lock the left side back door lock assembly by push into the screwdriver or such to the lock assembly.

If continuity is not as specified, replace the switch.

Cover Top Switch

INSPECTION OF COVER TOP SWITCH

INSPECT SWITCH CONTINUITY

Inspect the switch continuity between terminals.

Switch position \ Terminal	1	2	3
Free	○	○	
Pushed		○	○

If continuity is not as specified, replace the switch.

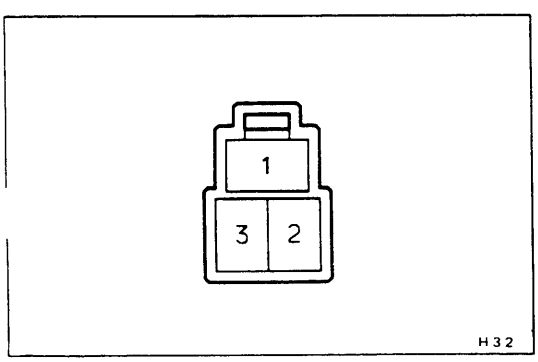

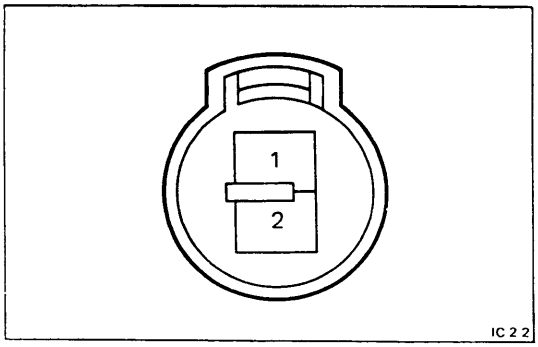

Power Window Motor

INSPECTION OF MOTOR

INSPECT MOTOR OPERATION

(a) Connect the positive (+) lead from the battery terminal 1 and the negative (—) lead to terminal 2, and check that the motor turns.

(b) Connect the positive (+) lead from the battery to terminal 2 and the negative (—) lead to terminal 1, and check that the motor turns in reverse.

If operation is not as specified, replace the motor.

Window Limit Switch

(See page BE-19)

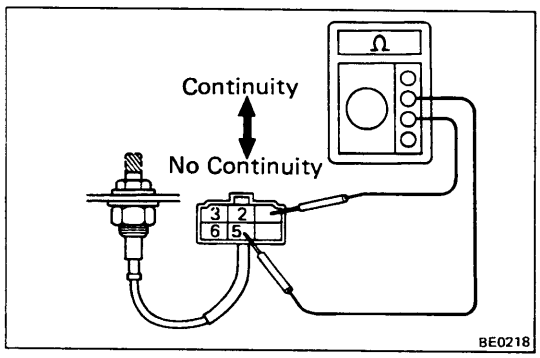

Rear Wiper Retraction Detection Switch

INSPECTION OF RETRACTION DETECTION SWITCH

INSPECT SWITCH CONTINUITY

(a) Check that there is continuity when the switch is free (wiper operating).

(b) Check that there is no continuity when the switch is pushed (wiper retracted).

If continuity is not as specified, replace the switch.

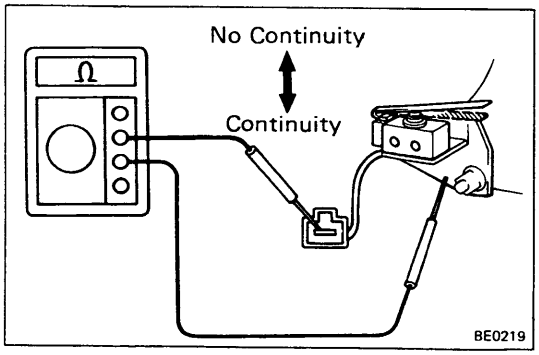

Back Door Unlock Warning Switch

INSPECTION OF UNLOCK WARNING SWITCH

INSPECT SWITCH CONTINUITY

(a) Check that there is continuity when the switch is pushed (back door unlock).

(b) Check that there is no continuity when the switch is free (back door locked).

If continuity is not as specified, replace the switch.

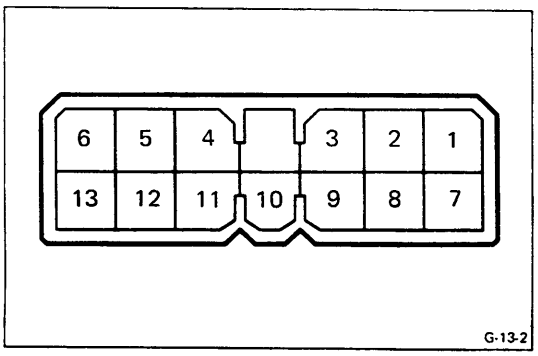

Power Window and Wiper Relay

INSPECTION OF POWER WINDOW AND WIPER RELAY

INSPECT RELAY CONTINUITY AND VOLTAGE

(a) Disconnect the connector from the relay, and inspect the connector on the wire harness side shown in the chart.

NOTE: Inspect the connector with the cover top installed (Cover top switch ON).

Terminal	Check item	Tester connection	Condition	Voltage or Continuity
2	Continuity	2 – Body Ground	Window limit switch ON (Window fully closed)	Continuity
			Window limit switch OFF (Window open)	No continuity
4	Continuity	4 – Body Ground	Door lock detection switch LOCKED (Back door close) and window regulator switch DOWN (Window down)	Continuity
			Door lock detection switch UNLOCK (Back door open) or window regulator switch not DOWN (Window not down)	No continuity
5	Continuity	5 – Body Ground	Door lock detection switch LOCKED (Back door close) and window regulator switch UP (Window up)	Continuity
			Door lock detection switch UNLOCK (Back door open) or window regulator switch not UP (Window not up)	No continuity
6	Voltage	6 – Body Ground		Battery Voltage
7	Continuity	7 – 9	Rear wiper switch ON	Continuity
			Rear wiper switch OFF	No continuity
8	Voltage	8 – Body Ground	Ignition switch ON	Battery Voltage
			Ignition switch OFF	No voltage
10	Continuity	10 – Body Ground		Continuity
11	Continuity	11 – Body Ground	Door lock detection switch LOCKED (Back door close) and door control switch DOWN (Window down)	Continuity
			Door lock detection switch UNLOCK (Back door open) or door control switch not DOWN (Window not down)	No continuity
12	Continuity	12 – Body Ground	Door lock detection switch LOCKED (Back door close) and door control switch UP (Window up)	Continuity
			Door lock detection switch UNLOCK (Back door open) or door control switch not UP (Window not up)	No continuity

(b) Apply battery voltage between terminals 1 and 3 of the wire harness side. Check that the window motor turns. Then connect in reverse, check that the motor turns in reverse.

If circuit is correct as specified above, replace the relay.

RADIO, STEREO TAPE PLAYER AND MOTOR ANTENNA

Troubleshooting

DESCRIPTION OF SYMBOLS

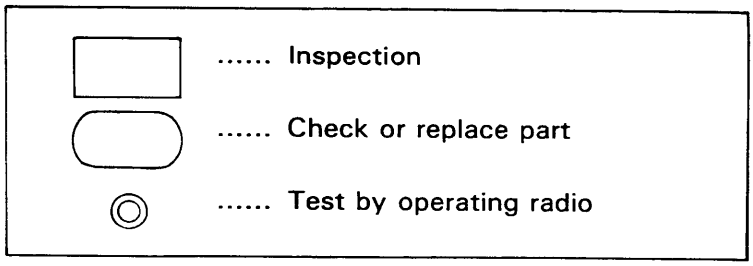

1. DEAD RADIO AND TAPE PLAYER

(a) No power to radio or tape player, or power but no sound.

Possible causes:

- Blown CIG fuse
- Short circuit or broken wire in power source wire harness
- Loose connectors behind radio and tape player
- Loose speaker connector
- Defective speaker
- Broken wire in speaker wire harness
- Improperly installed radio or tape player
- Defective radio or tape player

TEST 1

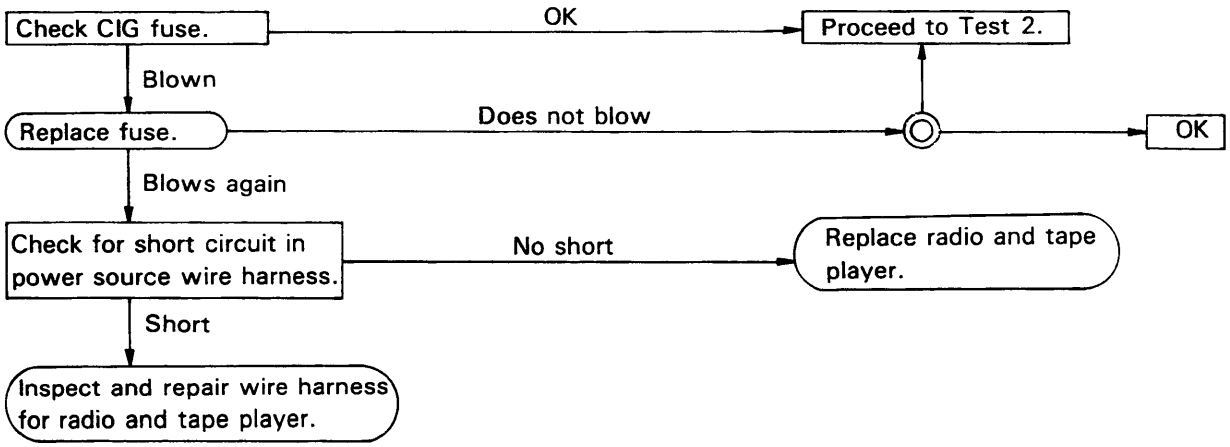

TEST 2

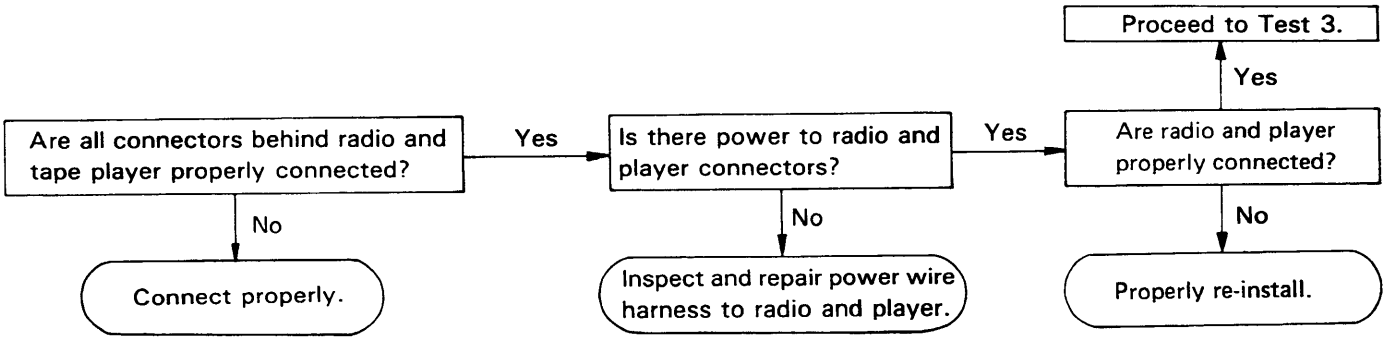
Are all connectors behind radio and tape player properly connected?
Yes
Is there power to radio and player connectors?
Yes
Are radio and player properly connected?
Yes
Proceed to Test 3.
No
Connect properly.
No
Inspect and repair power wire harness to radio and player.
No
Properly re-install.

TEST 3

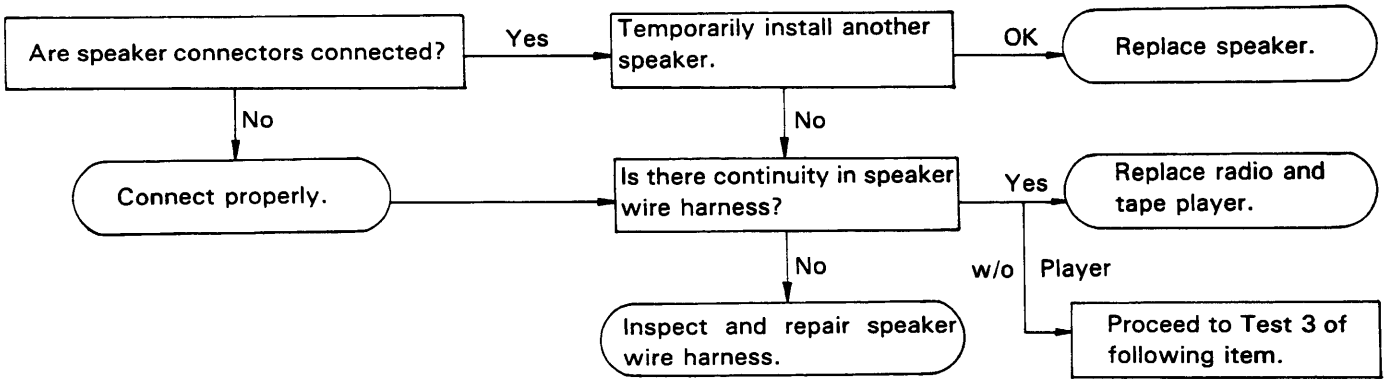
Are speaker connectors connected?
Yes
Temporarily install another speaker.
OK
Replace speaker.
No
No
Connect properly.
Is there continuity in speaker wire harness?
Yes
Replace radio and tape player.
No
w/o Player
Inspect and repair speaker wire harness.
Proceed to Test 3 of following item.

(b) Tape player okay but no sound from AM and FM or either one.

Possible causes:

- Antenna disconnected
- Antenna plug not properly connected
- Defective antenna
- Defective antenna cable
- Defective radio or tape player
- Blown HAZ-HORN fuse
- Short circuit or broken wire in wire harness for back-up power source

TEST 1

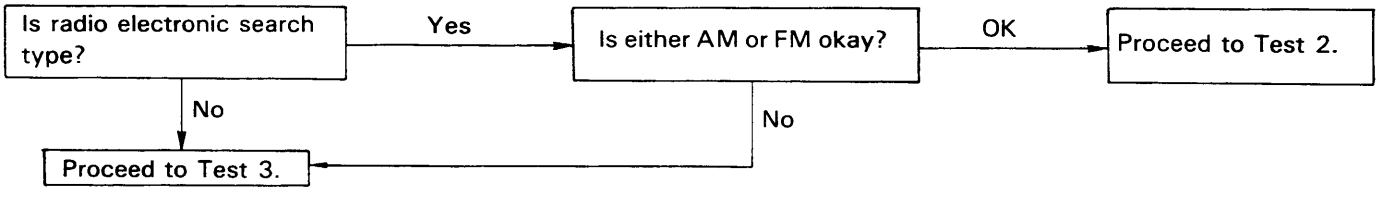

TEST 2

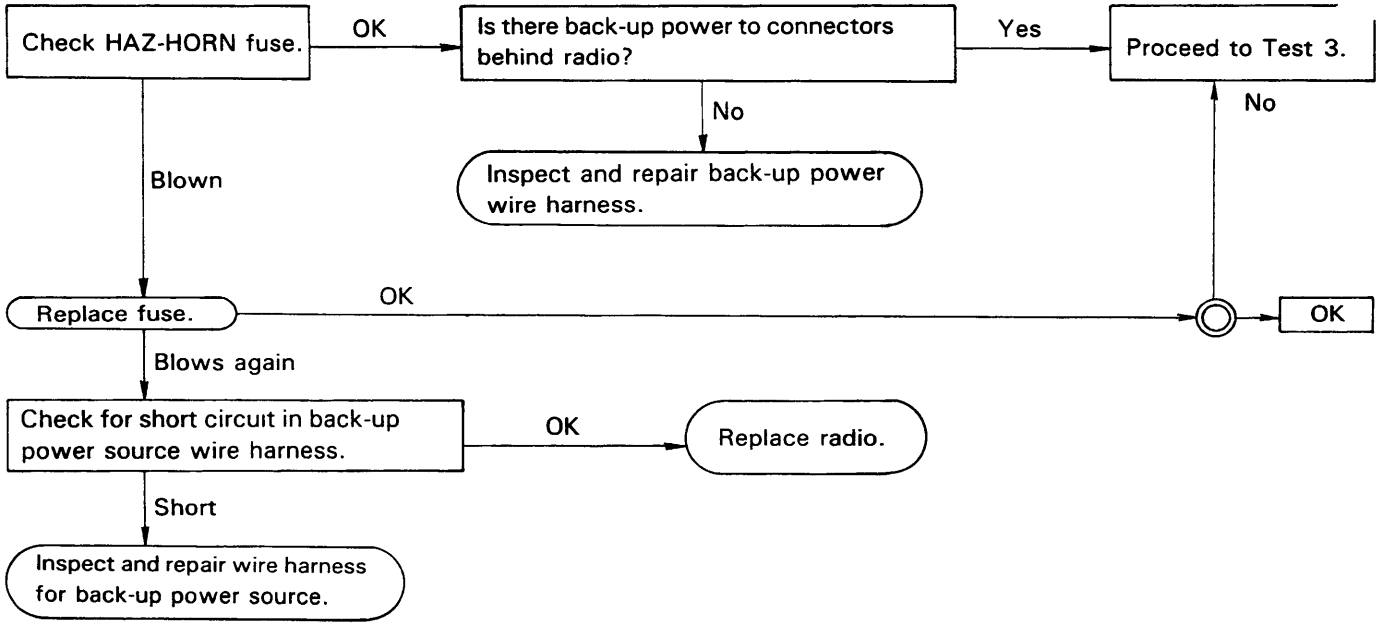

NOTE: Back-up power refers to the storage voltage for preset tuning. This is applied even when the ignition switch is OFF.

TEST 3

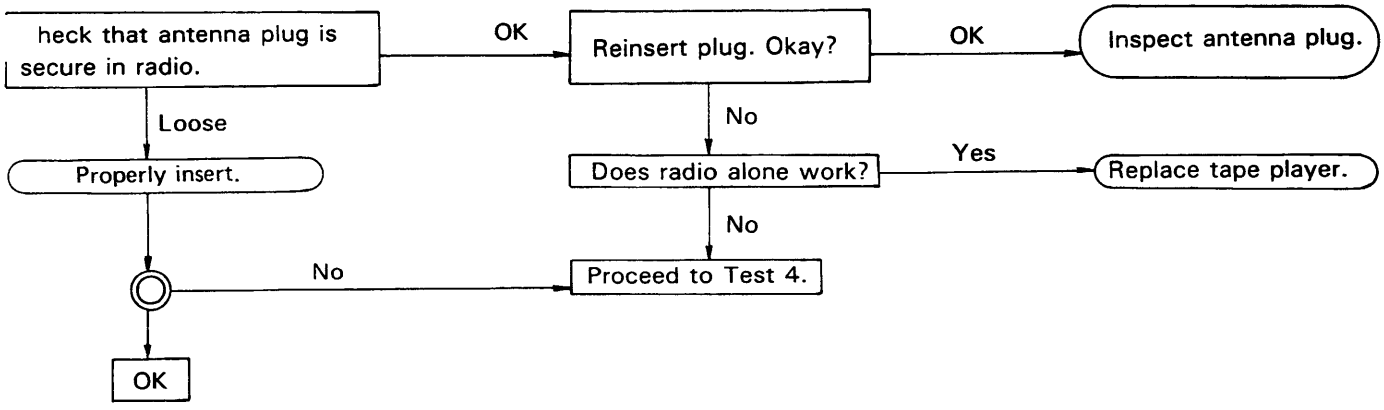
heck that antenna plug is secure in radio.
OK
Reinsert plug. Okay?
OK
Inspect antenna plug.
Loose
Properly insert.
No
Does radio alone work?
Yes
Replace tape player.
No
No
Proceed to Test 4.
OK

TEST 4

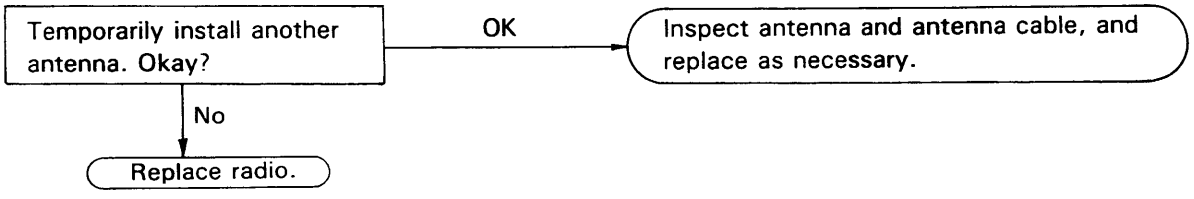
Temporarily install another antenna. Okay?
OK
Inspect antenna and antenna cable, and replace as necessary.
No
Replace radio.

(c) No sound from one speaker.

Possible causes:

- Loose speaker connector
- Broken wire in speaker wire harness
- Defective speaker
- Defective radio and tape player

TEST 1

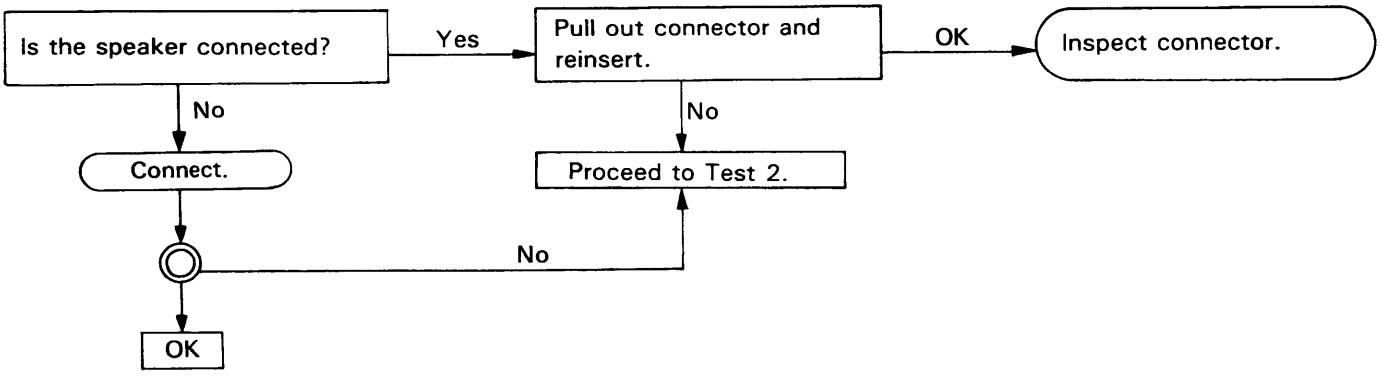

TEST 2

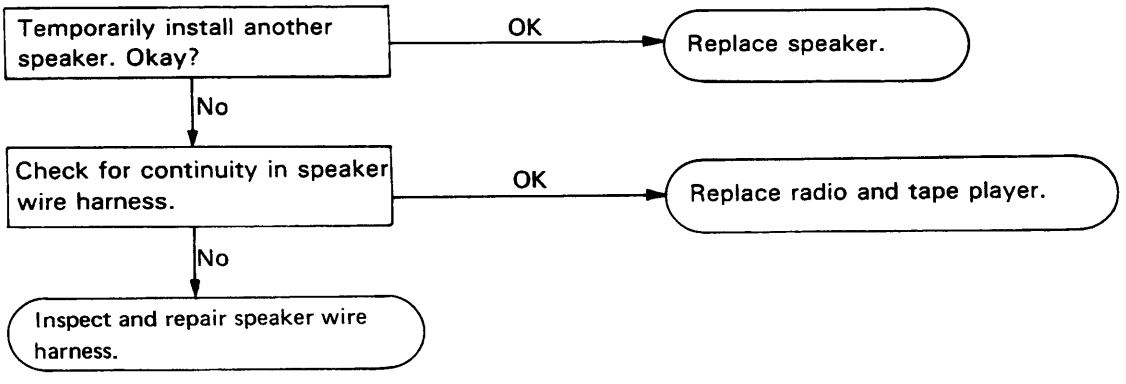

2. FAINT RECEPTION

Possible causes:

- Maladjusted antenna trimmer
- Defective antenna cable
- Defective speaker
- Defective radio

TEST

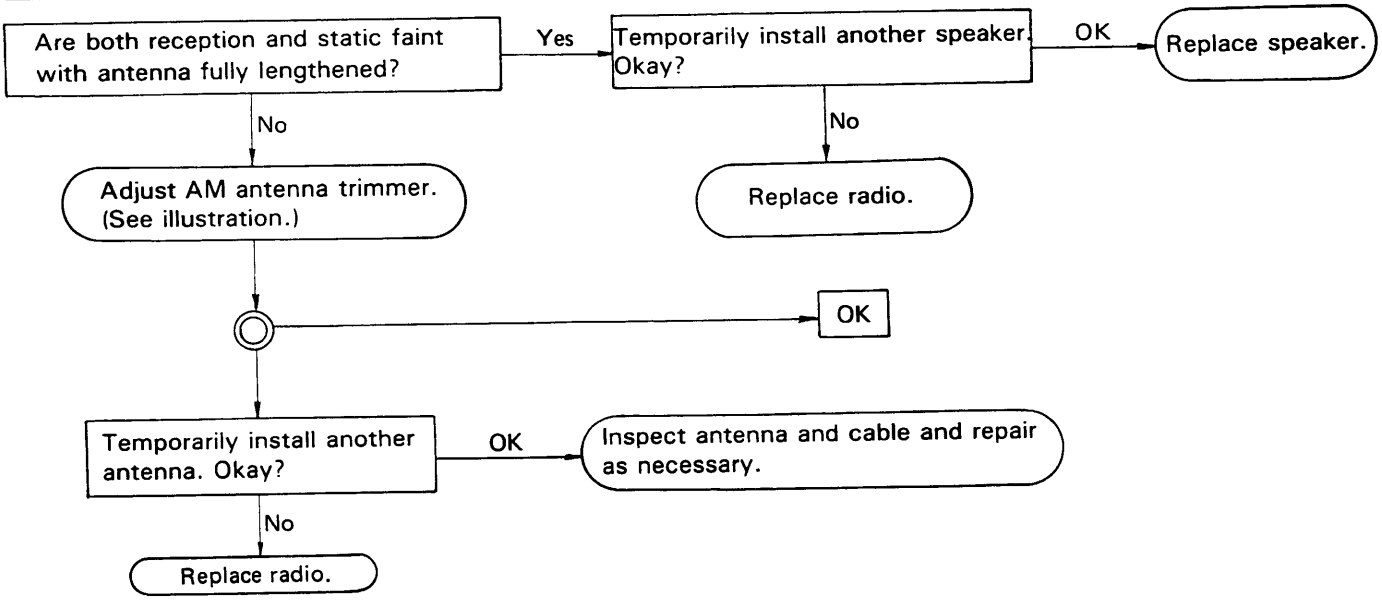

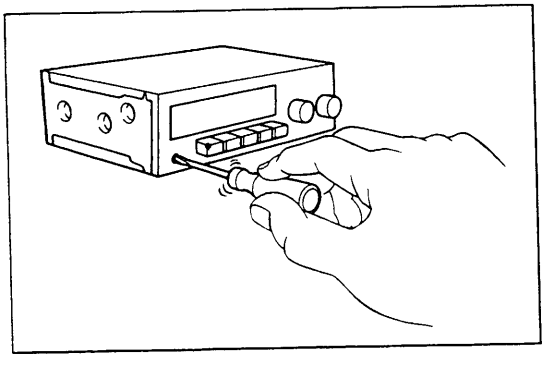

NOTE: Adjustment of antenna trimmer.

(1) Fully lengthen the antenna.

(2) With the volume and tone at maximum, turn the dial to around 1,400 kHz where there is no reception.

(3) Adjust the trimmer to where static is loudest.

3. BAD SOUND QUALITY

(a) Sound quality bad when radio played.

Possible causes:

- Multipath interference excessive interception
- Tuner dial not synchronized with station
- Defective antenna and cable
- Speaker improperly installed
- Vibration sound from components near speaker
- Defective speaker
- Defective radio

TEST 1

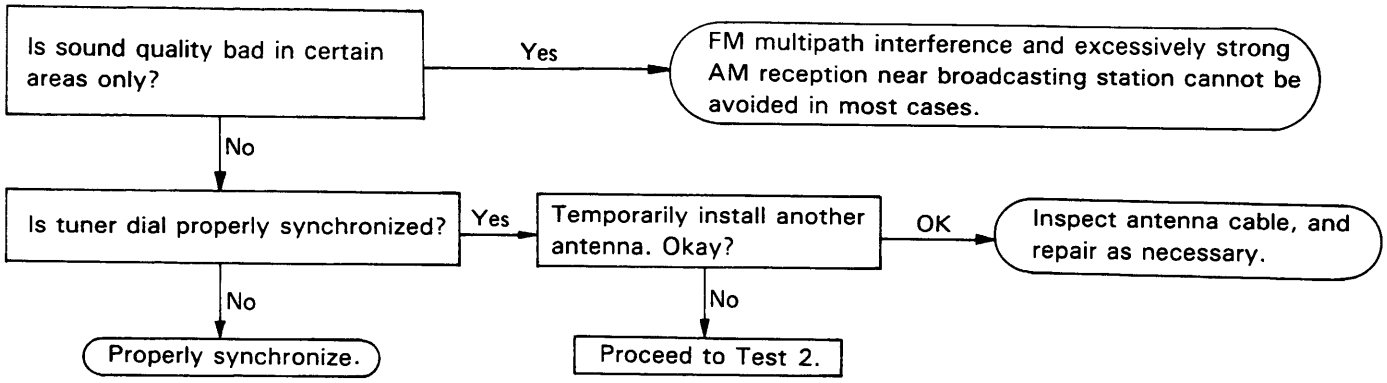

TEST 2

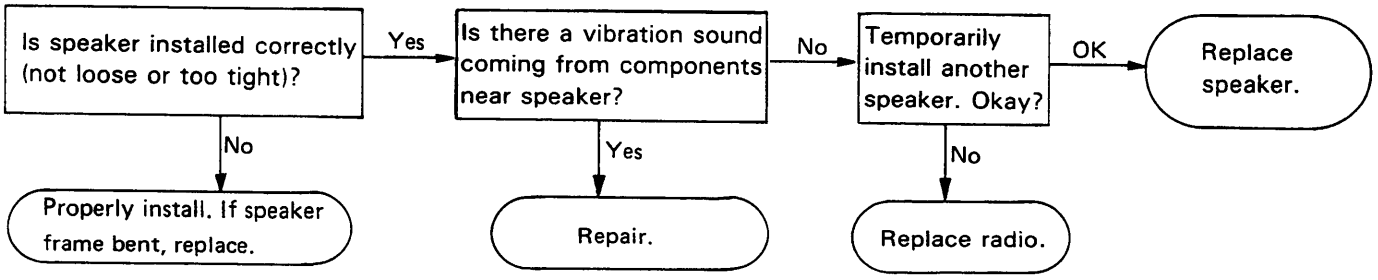

(b) Sound quality bad when tape player played.

Possible causes:

- Bad tape
- Dirty head
- Incorrectly installed speaker
- Vibration noise from around speaker
- Defective speaker
- Defective tape player

TEST 1

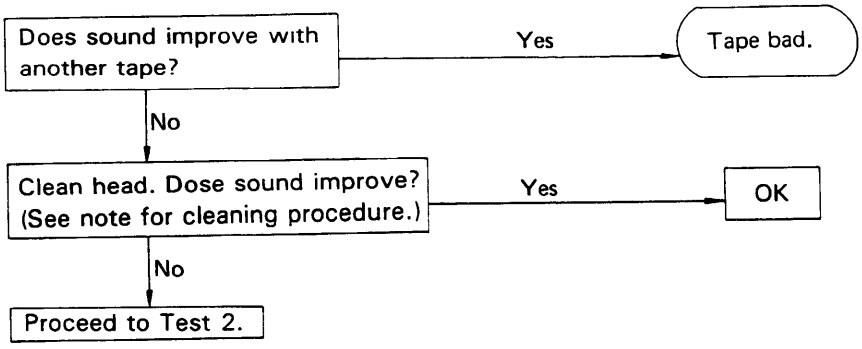

TEST 2

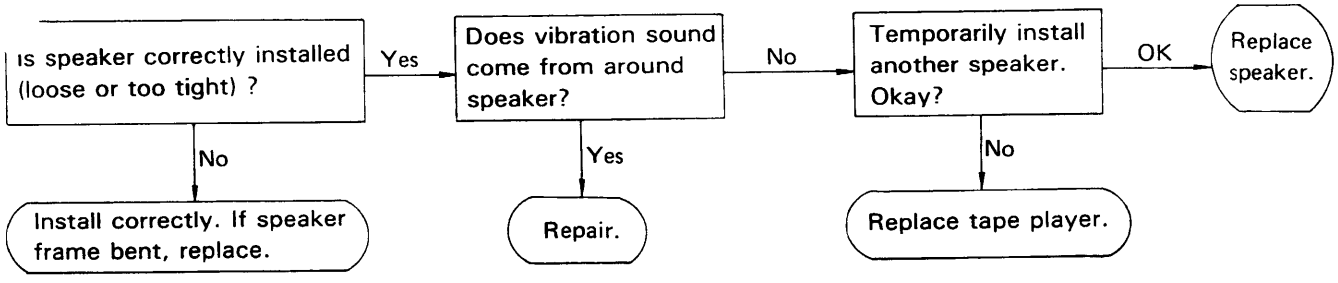

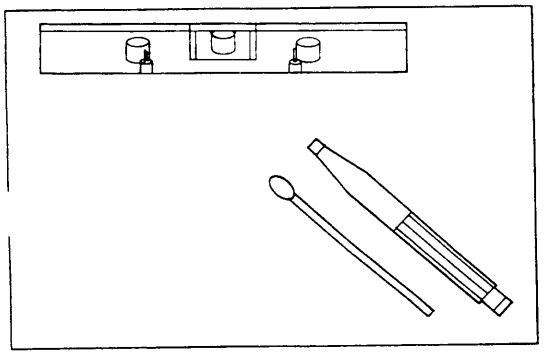

NOTE: Head cleaning procedure.

(1) Raise the cassette door with your finger. Next using a pencil or like object, push in the guide as shown.

(2) Using a cleaning pen or cotton applicator soaked in alcohol, clean the head surface, pinch rollers and capstans.

(3) Push in the eject button.

4. DEFECTIVE AUTO-SEARCH MECHANISM

Manual search possible but automatic search mechanism does not function or does not stop at all receivable static

Possible causes:

- Poor search sensitivity (SENS button)
- Defective radio

TEST

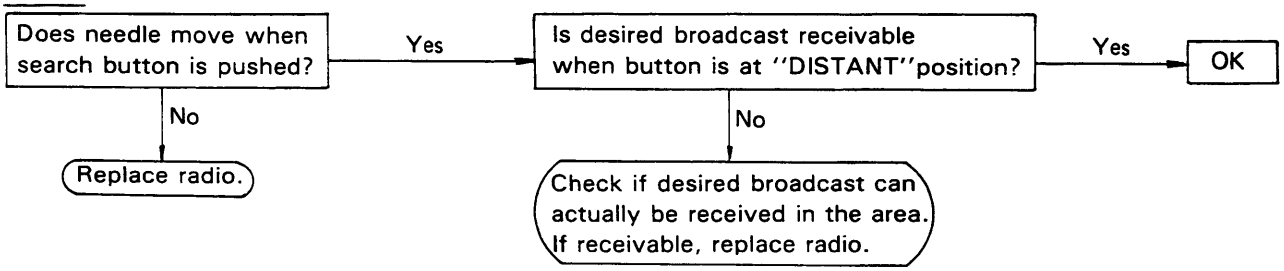

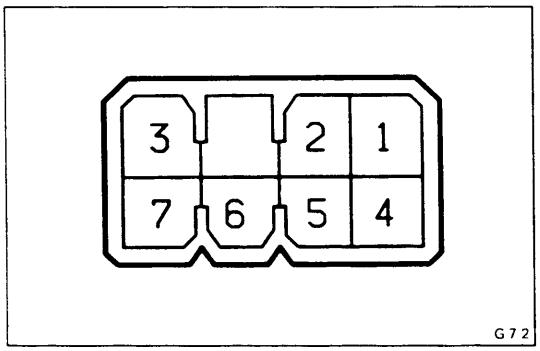

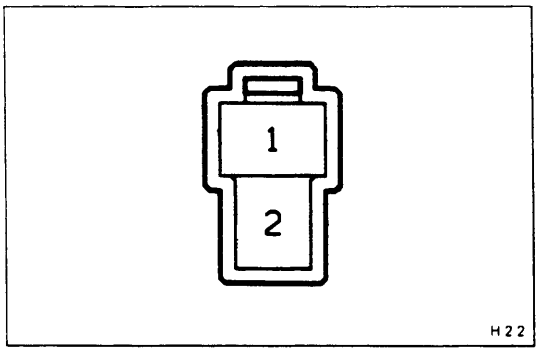

Antenna Motor Control Switch

INSPECTION OF CONTROL SWITCH

INSPECT SWITCH CONTINUITY

Inspect the switch continuity between terminals.

Switch position \ Terminal	2	3	5	6	7
UP		○	○	○	○
OFF			○	○	○
DOWN	○		○	○	○

If continuity is not as specified, replace the switch.

Antenna Motor

INSPECTION OF MOTOR

INSPECT MOTOR OPERATION

(a) Connect the positive (+) lead from the battery to terminal 1 and the negative (—) lead to terminal 2, and check that the antenna rises.

(b) Connect the positive (+) lead from the battery to terminal 2 and the negative (—) lead to terminal 1, and check that the antenna descends.

CLOCK

Troubleshooting

CLOCK WILL NOT OPERATE

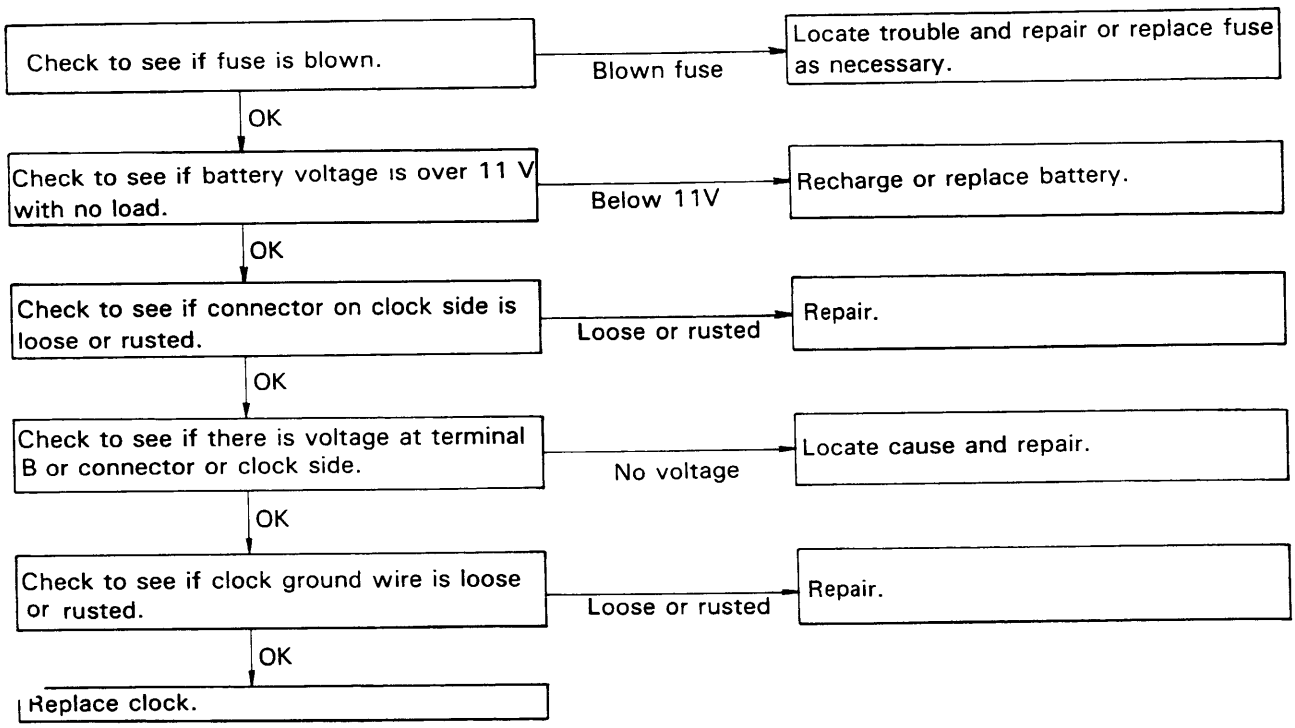

CLOCK LOSES OR GAINS TIME

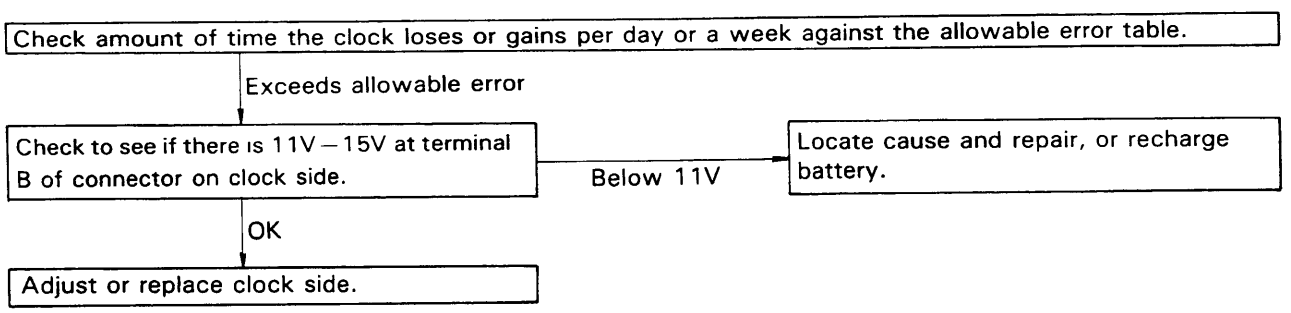

1. **INSPECT ALLOWABLE ERROR OF CLOCK**

Check the allowable error of the clock.

Allowable error (per day): ± 1.5 seconds

2. **ADJUSTMENT OF CLOCK**

Adjustment of the quartz clock requires a precise digital counter. Adjustment must be made in a shop specified by the manufacturer.

3. **SETTING OF CLOCK**

(a) Connect the battery terminal.

(b) Check the clock to see that it is running, and then set it to the correct time.

NOTE: Whenever the battery terminal is disconnected, make sure to set the clock to the correct time after reconnecting the battery.

BODY

	Page
HOOD	BO-2
DOOR	BO-3
BACK DOOR	BO-10
MOULDING	BO-18
COVER TOP	BO-23
WINDSHIELD	BO-25
SIDE SLIDE WINDOW	BO-31
QUARTER WINDOW (4 RUNNER)	BO-34
(TRUCK)	BO-37
BACK WINDOW	BO-38
REAR WIPER	BO-41
SAFETY PAD	BO-43
SEAT	BO-45
SEAT BELTS	BO-46
ONE-TOUCH TAIL GATE	BO-48
ROLL-OVER BAR	BO-50
BODY DIMENSIONS (2WD)	BO-51
BODY DIMENSIONS (4WD)	BO-52

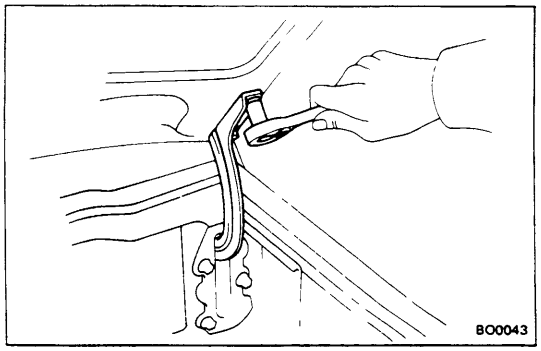

HOOD

ADJUSTMENT OF HOOD

1. **ADJUST HOOD IN FORWARD/REARWARD AND LEFT/RIGHT DIRECTIONS**

   Loosen the hood side hinge bolts to adjust.

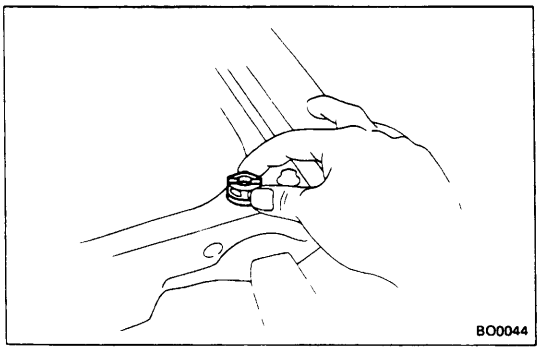

2. **ADJUST FRONT EDGE OF HOOD IN VERTICAL DIRECTION**

   Turn the hood cushions to adjust.

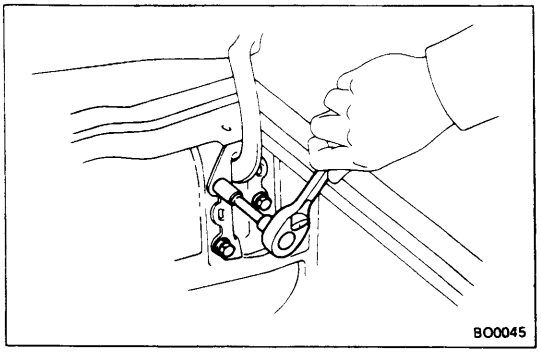

3. **ADJUST REAR EDGE OF HOOD IN VERTICAL DIRECTION**

   Loosen the body side hinge bolts to adjust.

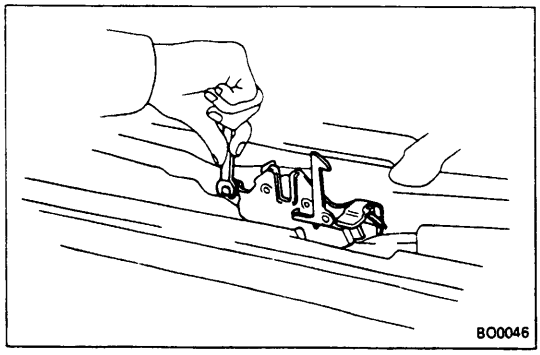

4. **ADJUST HOOD LOCK**

   Loosen the mounting bolts to adjust.

DOOR

COMPONENTS

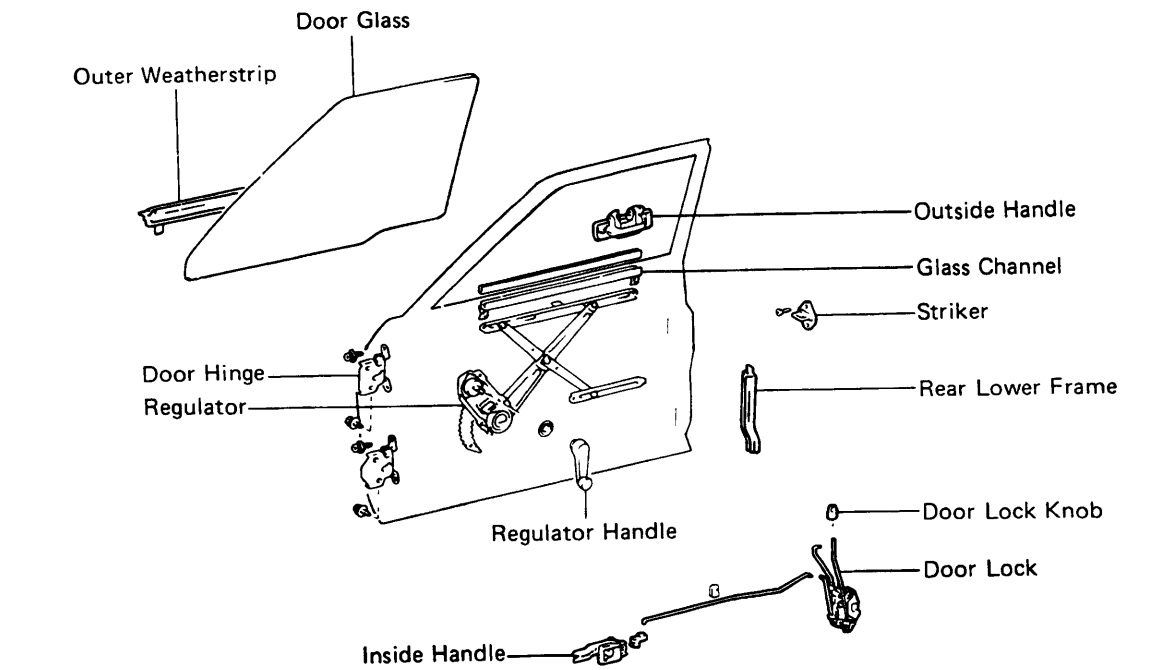

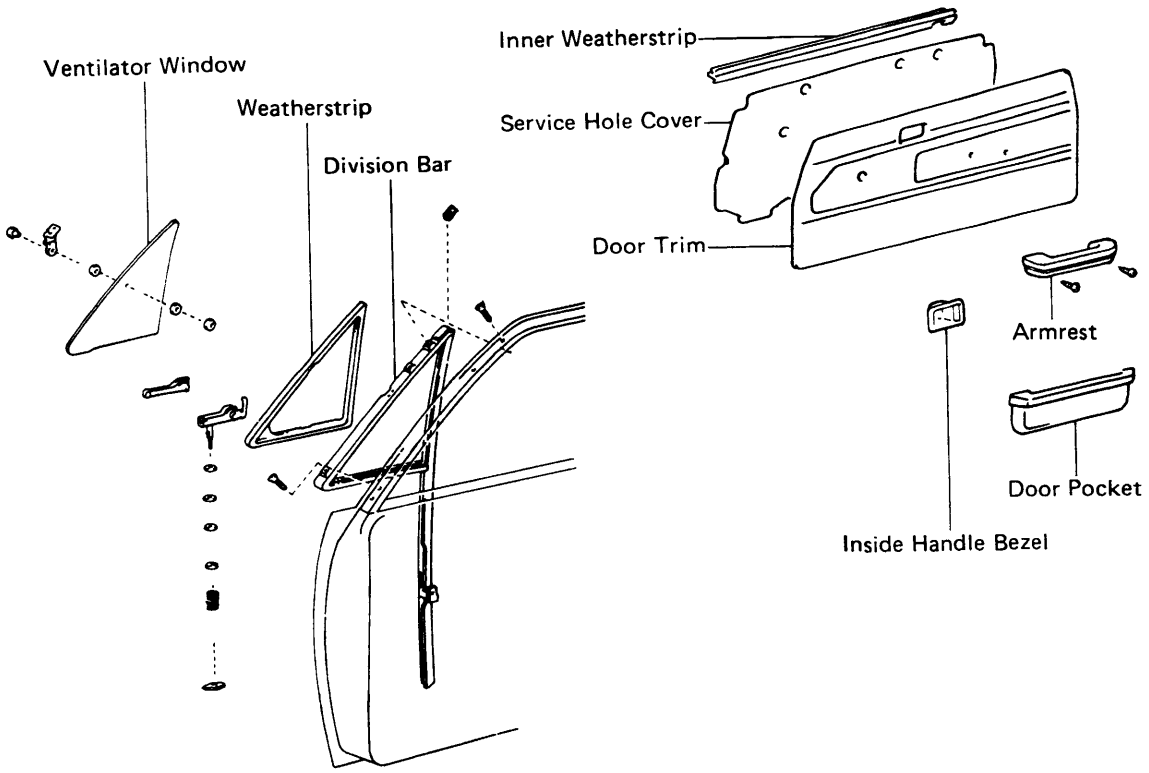

BO0047

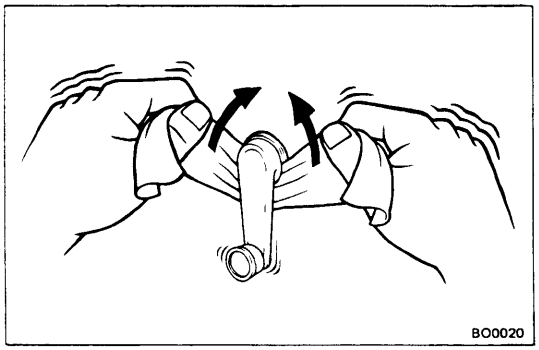

DISASSEMBLY OF DOOR

1. **REMOVE FOLLOWING PARTS:**
   (a) Door inside handle bezel
   (b) Armrest

2. **REMOVE WINDOW REGULATOR HANDLE**
   Pull off the snap ring with a cloth and remove the regulator handle.

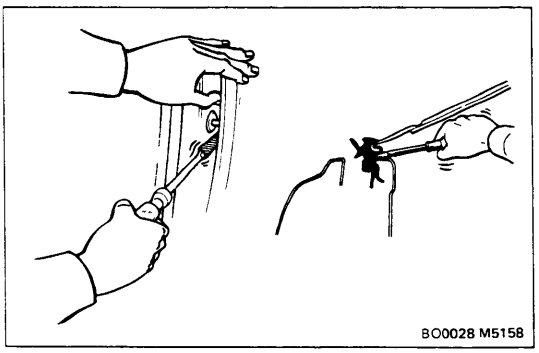

3. **REMOVE DOOR TRIM**
   (a) Insert a screwdriver between the trim retainers and door panel to pry it loose.
   CAUTION: Tape the screwdriver tip before use.
   (b) (Full door trim type)
   Turn up the trim and using a screwdriver, pry off it.
   (Semi door trim type)
   Pry out the inner weatherstrip.

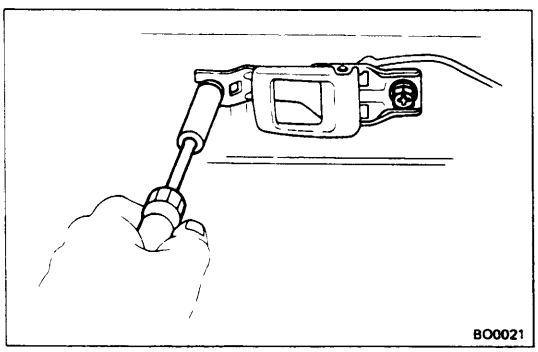

4. **REMOVE DOOR INSIDE HANDLE**
   (a) Peel off the outer ridges of the service hole cover.
   (b) Remove the two screws.
   (c) Disconnect the control link from the door lock and remove the handle.

5. **REMOVE SERVICE HOLE COVER**

6. **REMOVE OUTER WEATHERSTRIP**

7. **REMOVE GLASS RUN**

8. **REMOVE REAR LOWER FRAME**
   (a) Remove the frame set bolt.
   (b) Remove the frame.

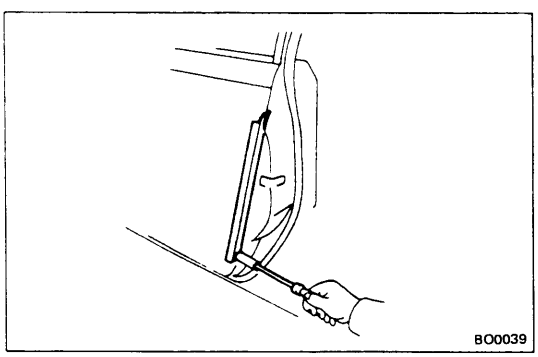

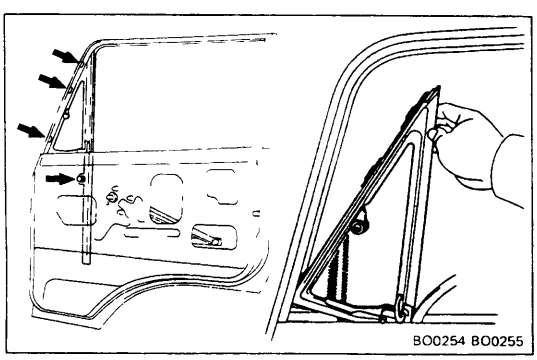

9. **REMOVE VENTILATOR WINDOW**
   (a) Remove two glass channel mounting bolts and place the glass on the bottom of the door cavity.
   (b) Peel off the weatherstrip on the upper side of the ventilator window.
   (c) Remove the three screws.
   (d) Remove the division bar set bolt.
   (e) Remove the ventilator window by pulling it upward.

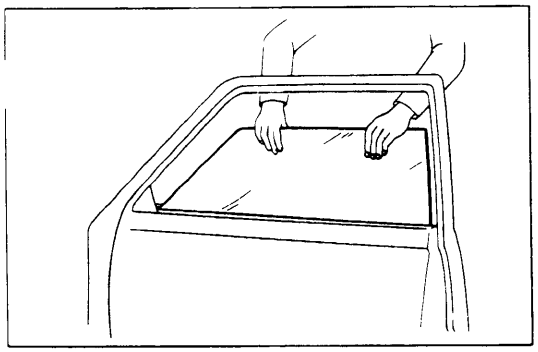

10. REMOVE DOOR GLASS

(a) (Without ventilator window type)
Remove two glass channel mounting bolts.

(b) Remove the door glass by pulling it upward.

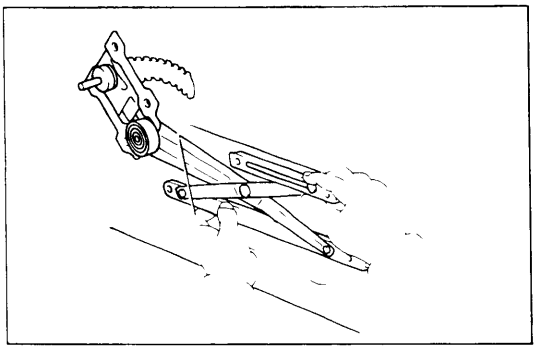

11. REMOVE WINDOW REGULATOR

(a) Remove the regulator mounting bolts.

(b) (Without ventilator window type)
Remove the two equalizer arm bracket mounting bolts.

(c) Remove the regulator through the service hole.

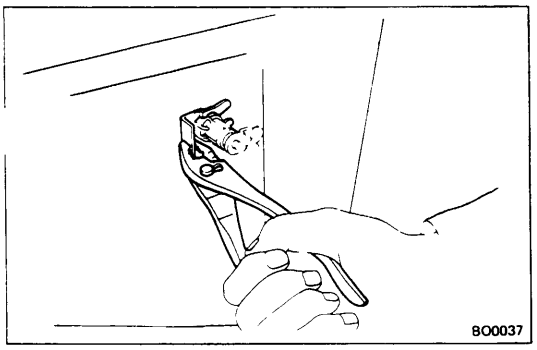

12. DISCONNECT FOLLOWING LINKAGES:

(a) Door inside locking control link

(b) Door outside opening control link

(c) Door outside locking control link

13. REMOVE DOOR LOCK CYLINDER

Remove the retainer with pliers.

14. REMOVE DOOR OUTSIDE HANDLE

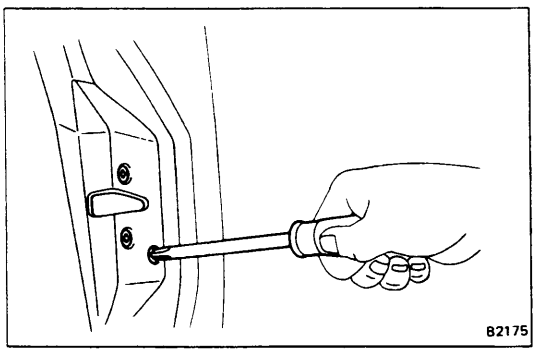

15. REMOVE DOOR LOCK

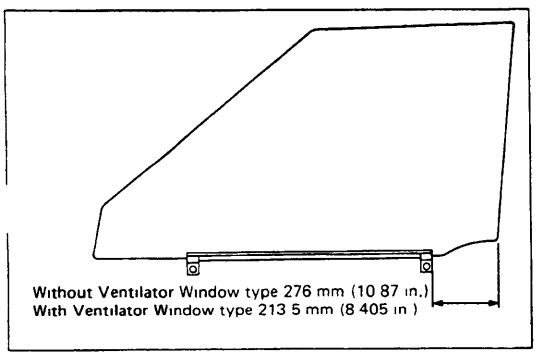

REPLACEMENT OF GLASS

1. REMOVE GLASS CHANNEL WITH SCREWDRIVER OR SUCH

2. APPLY SOAPY WATER TO INSIDE OF WEATHERSTRIP

3. TAP ON CHANNEL WITH PLASTIC HAMMER

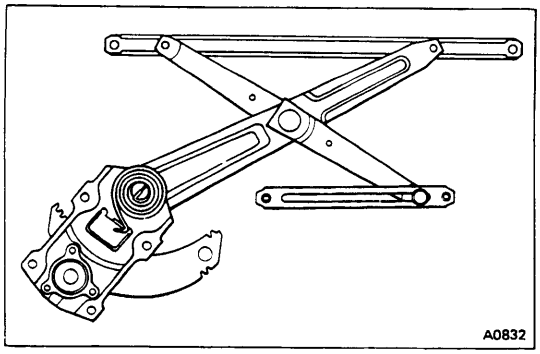

ASSEMBLY OF DOOR

(See page BO-3)

1. **BEFORE INSTALLING PARTS, COAT THEM WITH MP GREASE**
   (a) Coat the sliding surface, spring and gears of the window regulator with MP grease.
   (b) Coat the sliding surface of the door lock with MP grease.

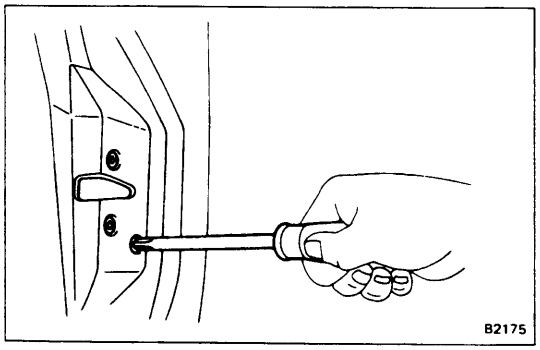

2. **INSTALL DOOR LOCK**
   (a) Place the door lock in the door cavity.
   (b) Install the door lock with the three screws.

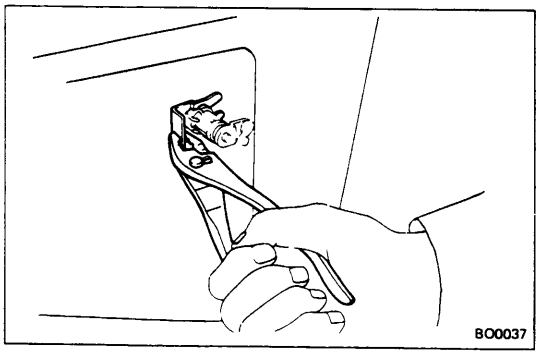

3. **INSTALL DOOR LOCK CYLINDER**
   Install the lock cylinder with the retainer and connect the control link.

4. **INSTALL DOOR OUTSIDE HANDLE**
   Install the handle with the two bolts and connect the control link.

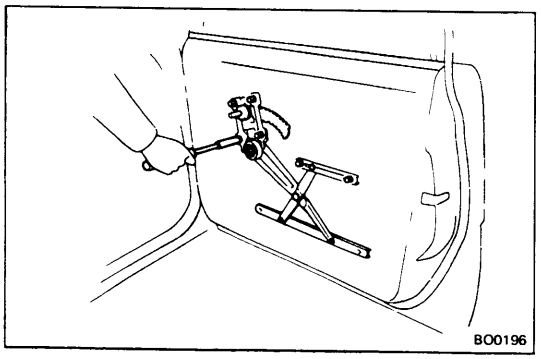

5. **INSTALL WINDOW REGULATOR**
   (a) Place the regulator through the service hole and install the mounting bolts.
   (b) (without ventilator window type)
   Install the two equalizer arm bracket mounting bolts.

6. **PLACE DOOR GLASS IN DOOR**
   Insert the door glass in the door cavity.

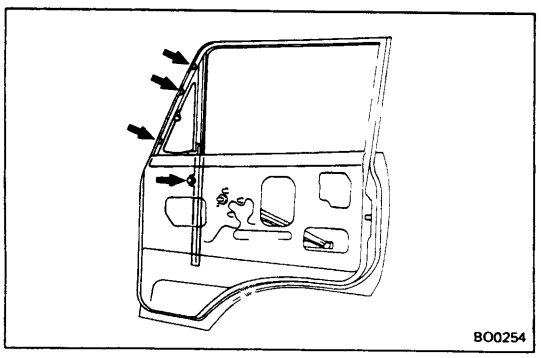

7. **INSTALL VENTILATOR WINDOW**
   (a) Install the three screws.
   (b) Install the division bar set bolt.
   (c) Install the two glass channel mounting bolts.

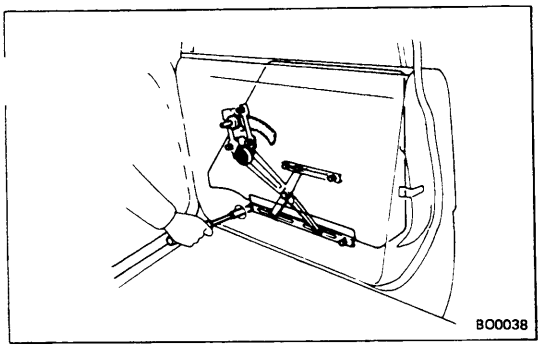

8. INSTALL DOOR GLASS

Install the glass to the regulator with the two mounting bolts.

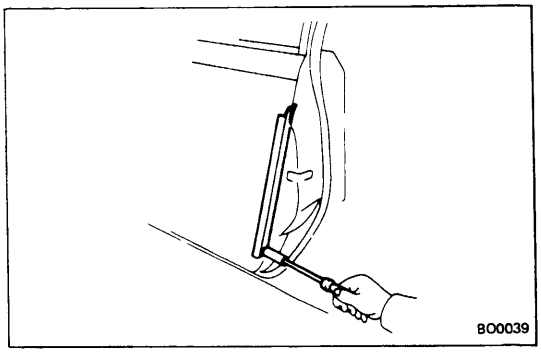

9. INSTALL REAR LOWER FRAME

(a) Attach the glass run into the frame.

(b) Install the frame with the bolt.

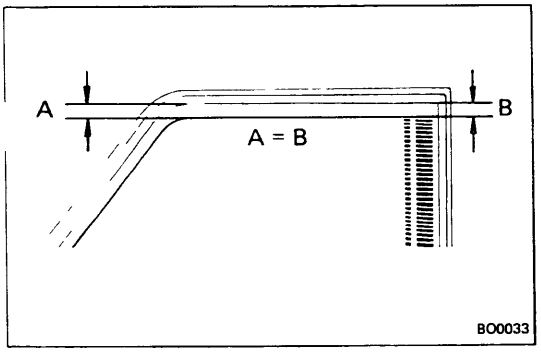

10. ADJUST DOOR GLASS

Adjust the equalizer arm up or down and tighten it where dimensions A and B, as shown, are equal.

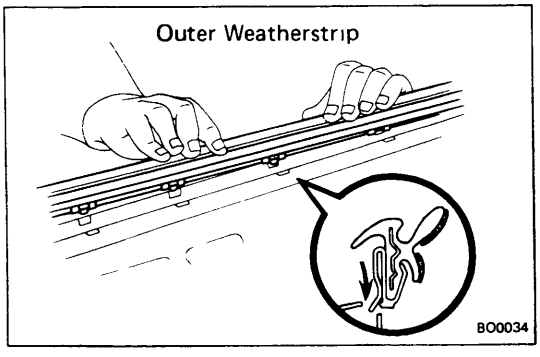

11. INSTALL OUTER WEATHERSTRIP

Insert the claw of the clips into the upper panel hole and push the weatherstrip onto the panel.

12. CONNECT DOOR INSIDE LOCKING CONTROL LINK

13. INSTALL DOOR INSIDE OPENING CONTROL LINK

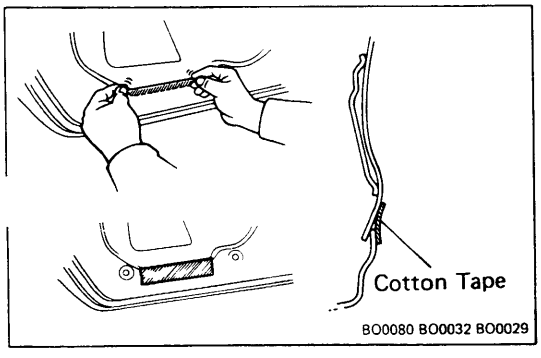

14. INSTALL SERVICE HOLE COVER

(a) Seal the service hole cover with adhesive.

(b) Insert the lower edge of the service hole cover into the panel slit.

(c) Seal the panel slit with cotton tape.

CAUTION: Do not block the trim clip seating with the tape.

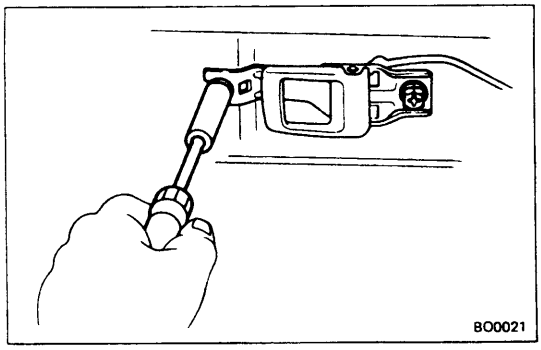

15. INSTALL DOOR INSIDE HANDLE

Install the handle with the two screws.

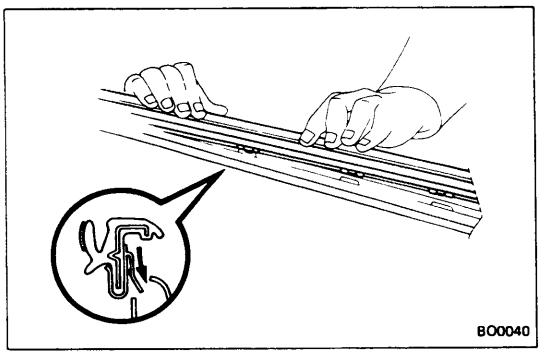

16. INSTALL DOOR TRIM

(a) Insert the weatherstrip clips into the door panel holes and push the weatherstrip onto the panel.

(b) Install the door trim.

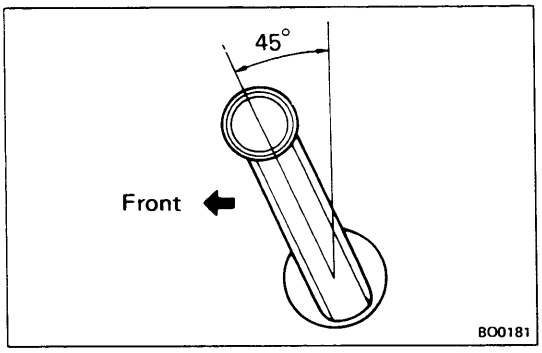

17. INSTALL WINDOW REGULATOR HANDLE

With door window fully closed, install the window regulator handle with a snap ring as shown.

18. INSTALL DOOR INSIDE HANDLE BEZEL AND ARMRES.

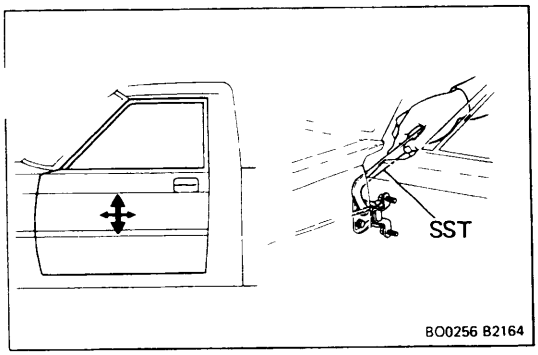

ADJUSTMENT OF DOOR

1. ADJUST DOOR IN FORWARD/REARWARD AND VERTICAL DIRECTIONS

Using SST, adjust the door by loosening the body side hinge bolts.

SST 09812-00010

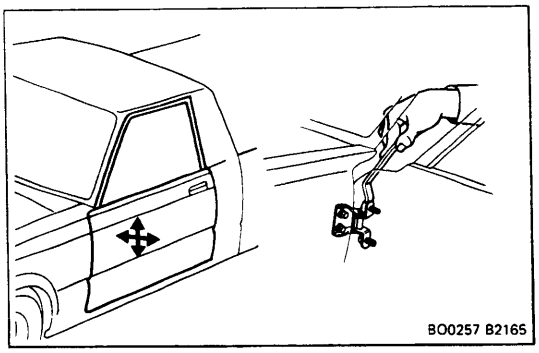

2. ADJUST DOOR IN LEFT/RIGHT AND VERTICAL DIRECTIONS

Loosen the door side hinge bolts to adjust.

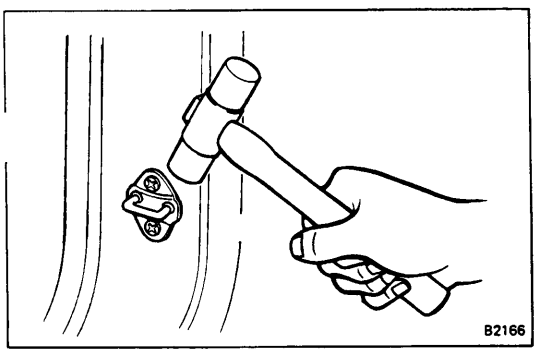

3. ADJUST DOOR LOCK STRIKER

(a) Check that the door fit and door lock linkages are adjusted correctly.

(b) Loosen the striker mounting screws to adjust.

BACK DOOR

COMPONENTS

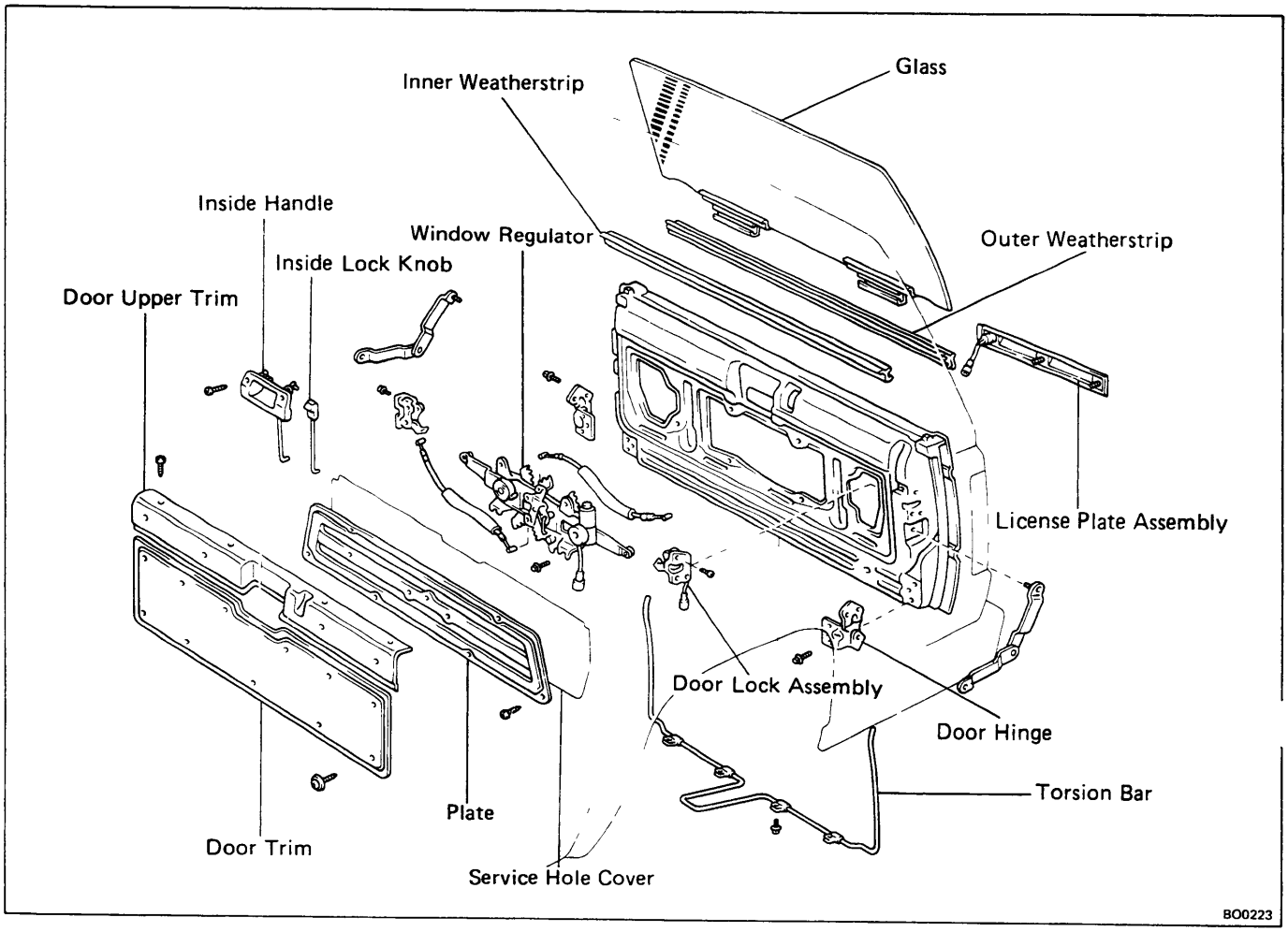

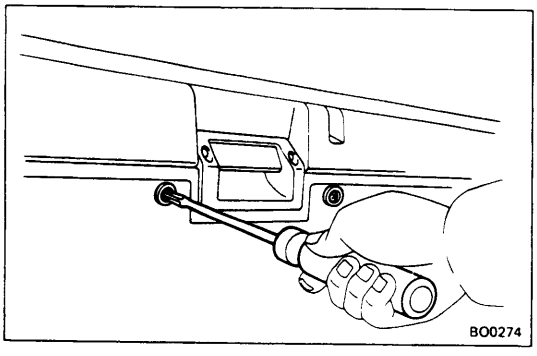

DISASSEMBLY OF BACK DOOR (POWER WINDOW OPERATIVE)

If the power window is not operative, see page BO-4.

1. **REMOVE DOOR TRIM**
2. **REMOVE PLATE**
3. **REMOVE SERVICE HOLE COVER**

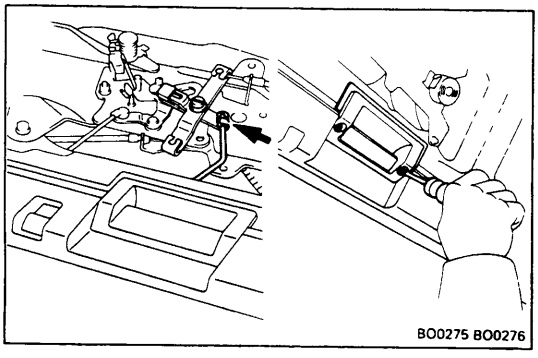

4. **REMOVE INSIDE HANDLE**
   (a) Disconnect the control link on the regulator side.
   (b) Remove the two screws.
   (c) Remove the inside handle assembly.

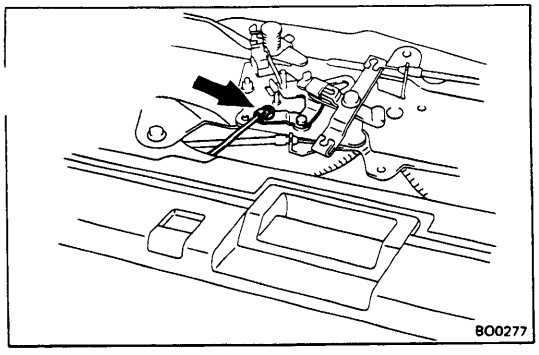

5. REMOVE INSIDE LOCK KNOB AND LINK

Disconnect the inside lock knob link on the regulator side, and remove it.

6. REMOVE DOOR UPPER TRIM

7. REMOVE INNER WEATHERSTRIP

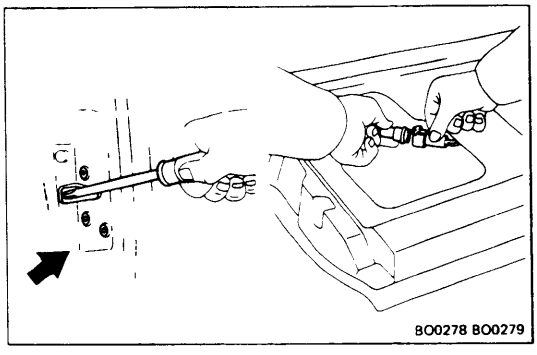

8. RAISE GLASS HALF OF FULL STROKE

Using a screwdriver, move the locking assembly to the lock position and then raise the glass to where the arms of the regulator are in a straight line.

9. DISCONNECT CONNECTOR FROM WINDOW REGULATOR MOTOR

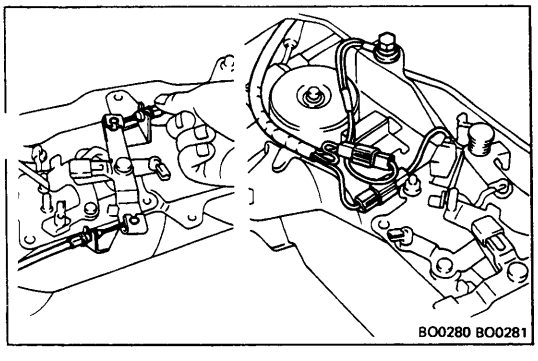

10. DISCONNECT DOOR LOCK CONTROL CABLES

Disconnect the door lock control cables on the regulator side.

11. DISCONNECT CONNECTORS AND GROUND CABLE

Disconnect the two connectors on the regulator and ground cable.

12. REMOVE REGULATOR MOUNT BOLTS

Remove the three regulator mount bolts.

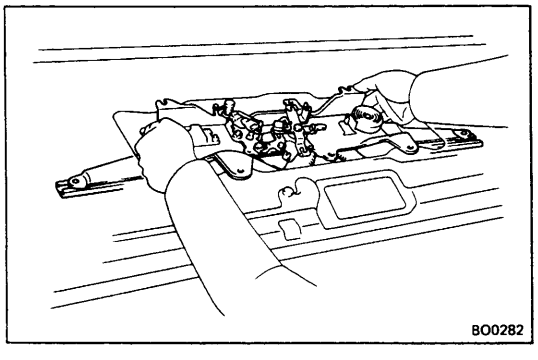

13. SLIDE OUT REGULATOR ARMS FROM GLASS

Slide the regulator left and right, and pull the arms from the glass channel.

14. REMOVE GLASS

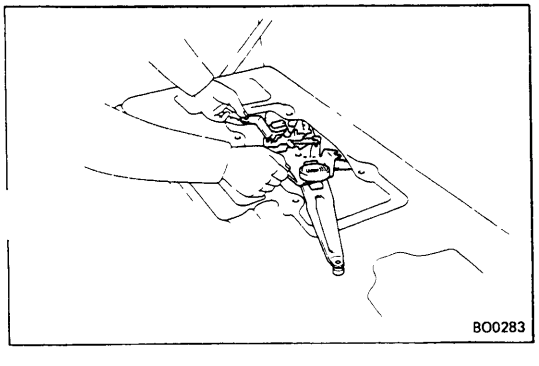

15. REMOVE REGULATOR

First shift the regulator into the cavity and then pull it out.

16. REMOVE OUTER WEATHERSTRIP

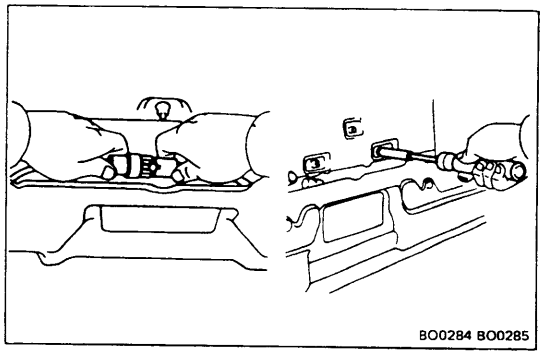

17. **DISCONNECT CONNECTOR FROM OUTER POWER WINDOW SWITCH**

18. **REMOVE LICENSE PLATE ASSEMBLY**

Remove the two nuts and a clip, and remove the license plate assembly.

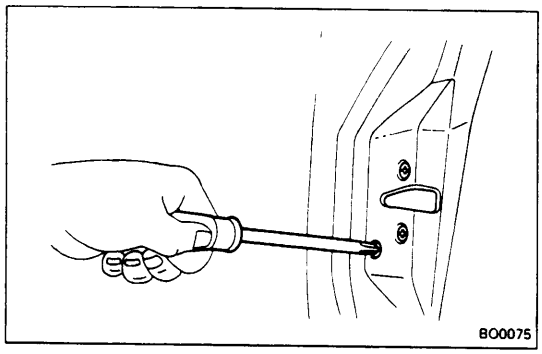

19. **REMOVE DOOR LOCK ASSEMBLY**

(a) Disconnect the connector from the door lock assembly. (LH side only)

(b) Remove the three screws.

(c) Pull out the door lock assembly from the cavity.

20. **PULL OUT WIRING FROM DOOR CAVITY**

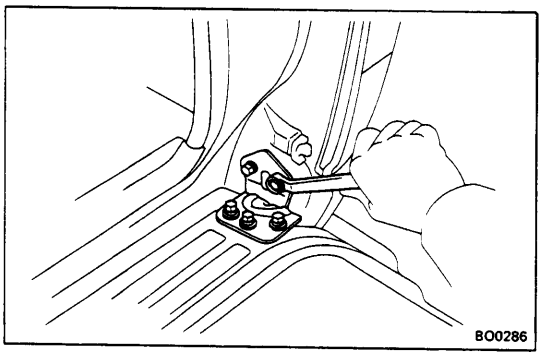

21. **REMOVE DOOR**

Remove the two bolts of the door hinge and remove the door.

NOTE: Place a shop cloth between the door and bumpe so the door does not fall off and get damaged when the bolts are removed.

22. **REMOVE TORSION BAR FROM DOOR**

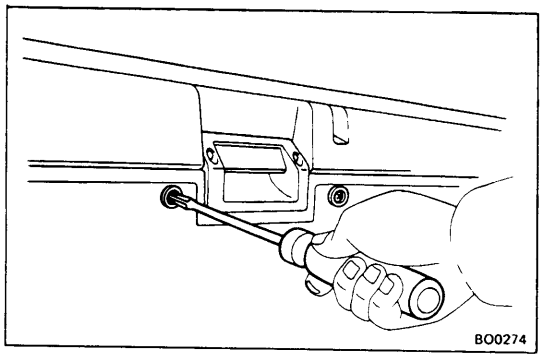

(POWER WINDOW NOT OPERATIVE)

If the power window is operative, see page BO-2.

1. **REMOVE DOOR TRIM**

2. **REMOVE PLATE**

3. **REMOVE SERVICE HOLE COVER**

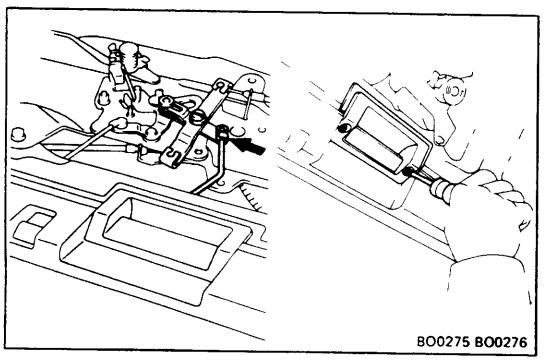

4. **REMOVE INSIDE HANDLE**

(a) Disconnect the control link on the regulator side.

(b) Remove the two screws.

(c) Remove the inside handle assembly.

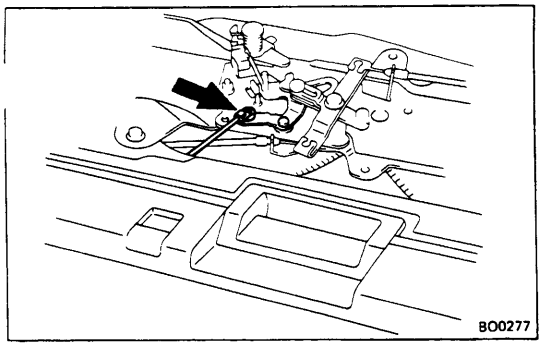

5. REMOVE INSIDE LOCK KNOB AND LINK

Disconnect the inside lock knob link on the regulator side, and remove it.

6. REMOVE DOOR UPPER TRIM

7. REMOVE INNER WEATHERSTRIP

8. DISCONNECT CONNECTOR FROM WINDOW REGULATOR MOTOR

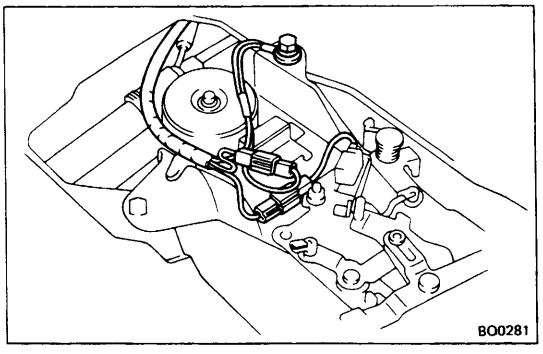

9. DISCONNECT CONNECTORS AND GROUND CABLE

Disconnect the two connectors on the regulator and then disconnect the ground cable by removing the regulator mounting bolt to which it is attached.

10. DISCONNECT DOOR LOCK CONTROL CABLES

Disconnect the door lock control cables on the regulator side.

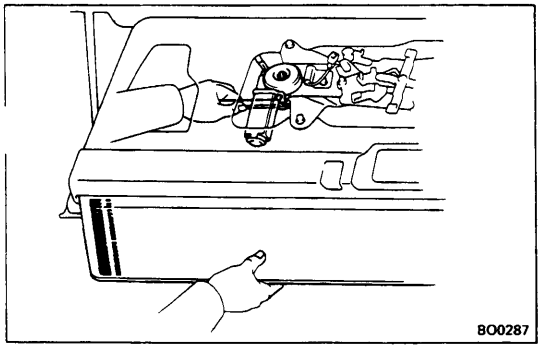

11. REMOVE REGULATOR MOTOR

While holding the glass so it does not fly out, remove the regulator motor.

CAUTION: Never attempt to remove the regulator motor without holding the glass as there is danger of the regulator arm swinging up.

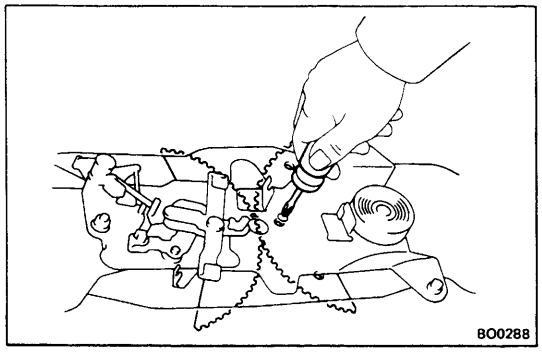

12. LOCK REGULATOR ARM

(a) Lower the glass to lowermost position, and open the back door by pulling the door lock control cables.

(b) Raise the glass to horizontally position the regulator arms. Then insert a stubby screwdriver or such into a service hole in the regulator to secure the arms.

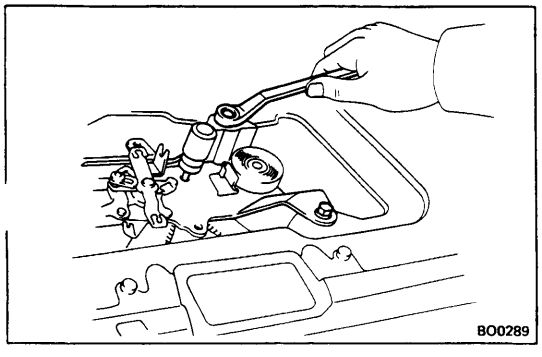

13. REMOVE REGULATOR MOUNT BOLTS

Remove the three regulator mount bolts.

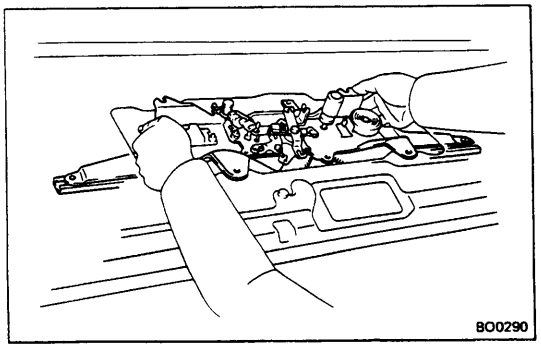

14. SLIDE OUT REGULATOR ARMS FROM GLASS

Slide the regulator left and right, and pull the arms from the glass channel.

15. REMOVE GLASS

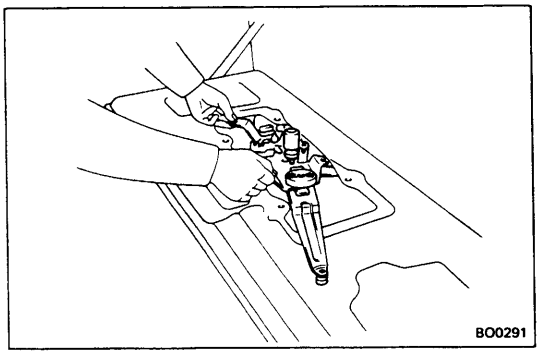

16. REMOVE REGULATOR

First shift the regulator into the cavity and then pull it out.

17. REMOVE OUTER WEATHERSTRIP

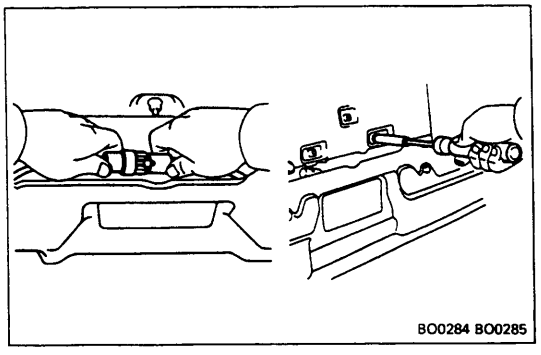

18. DISCONNECT CONNECTOR FROM OUTER POWER WINDOW SWITCH

19. REMOVE LICENSE PLATE ASSEMBLY

Remove the two nuts and a clip, and remove the license plate assembly.

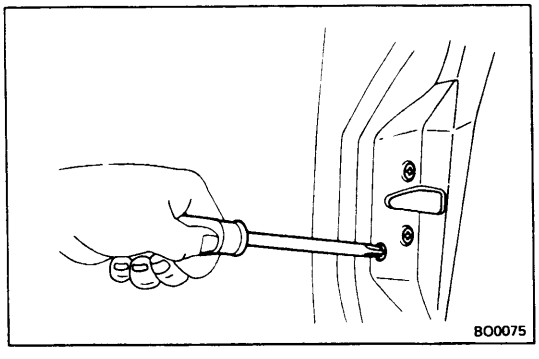

20. REMOVE DOOR LOCK ASSEMBLY

(a) Disconnect the connector from the door lock assembly. (LH side only)

(b) Remove the three screws.

(c) Pull out the door lock assembly from the cavity.

21. PULL OUT WIRING FROM DOOR CAVITY

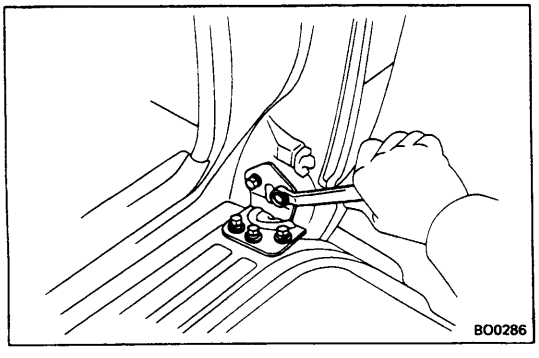

22. REMOVE DOOR

Remove the two bolts of the door hinge and remove the door.

NOTE: Place a shop cloth between the door and bumper so that the door does not fall off and get damaged when the bolts are removed.

23. REMOVE TORSION BAR FROM DOOR

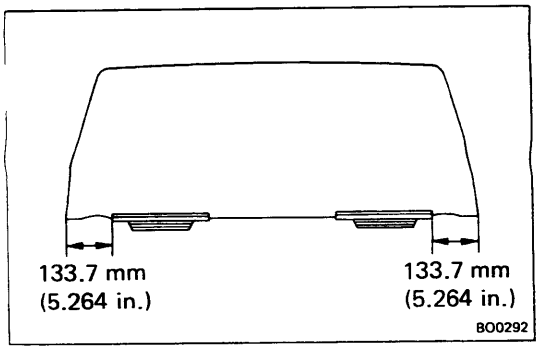

REPLACEMENT OF GLASS

1. **REMOVE GLASS CHANNEL WITH SCREWDRIVER OR SUCH**
2. **APPLY SOAPY WATER TO INSIDE OF WEATHERSTRIP**
3. **INSTALL NEW GLASS CHANNEL BY TAPPING IT WITH PLASTIC HAMMER**

ASSEMBLY OF BACK DOOR

1. **BEFORE INSTALLING PARTS, APPLY MP GREASE TO THEM**
   (a) Apply MP grease to the sliding surface, spring and gears of the window regulator.
   (b) Apply MP grease to the sliding surface of the door lock.

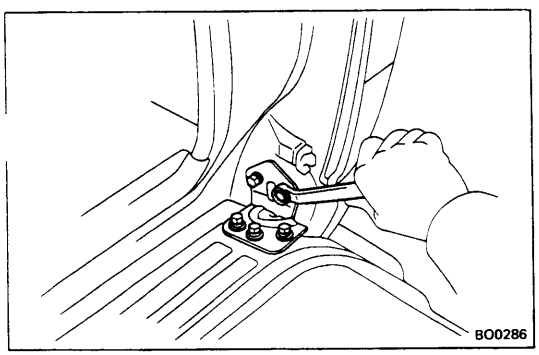

2. **INSTALL TORSION BAR TO DOOR**
3. **INSTALL BACK DOOR**
   Torque: 260 kg-cm (19 ft-lb, 25 N·m)
4. **INSTALL WIRING INTO DOOR CAVITY**

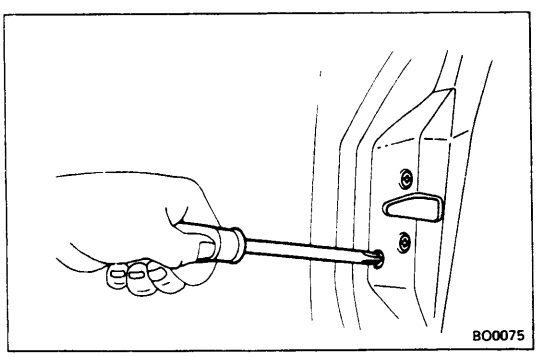

5. **INSTALL DOOR LOCK ASSEMBLY**
   (a) Install the door lock assembly to the door cavity.
   (b) Install the three screws.
   (c) Connect the connector to the door lock assembly. (LH side only)

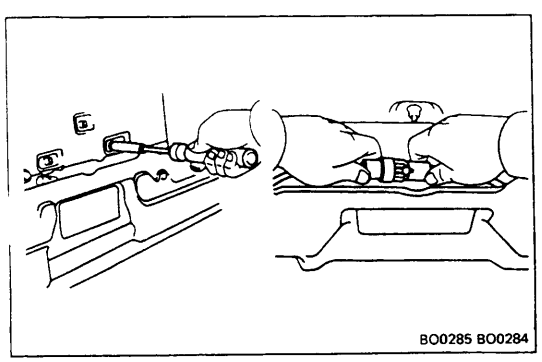

6. **INSTALL LICENSE PLATE ASSEMBLY**
   Install the two nuts and a clip, and install the license plate assembly.
7. **CONNECT CONNECTOR TO OUTER POWER WINDOW SWITCH**
8. **INSTALL OUTER WEATHERSTRIP**

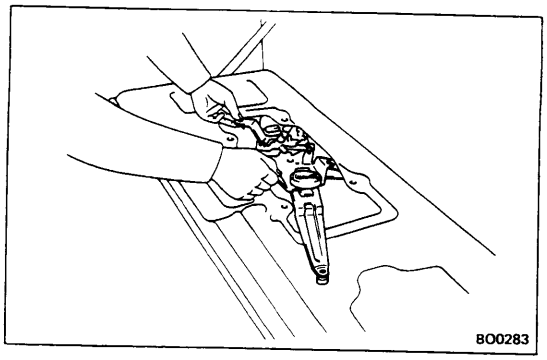

9. INSTALL REGULATOR

NOTE: Before placing the regulator into the cavity, first install the motor and position the arms in a straight lir.

10. INSTALL GLASS

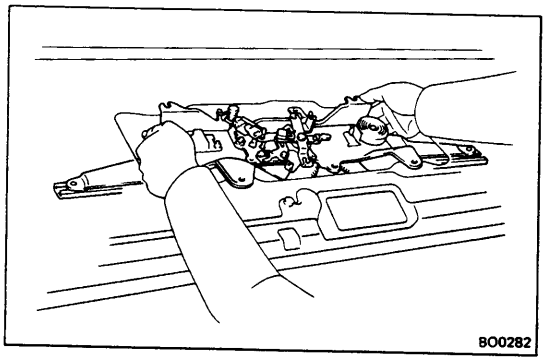

11. SLIDE REGULATOR ARMS INTO GLASS

Slide the regulator left and right to insert the arms into the glass channel.

12. INSTALL REGULATOR MOUNT BOLTS

Install the three mount bolts.

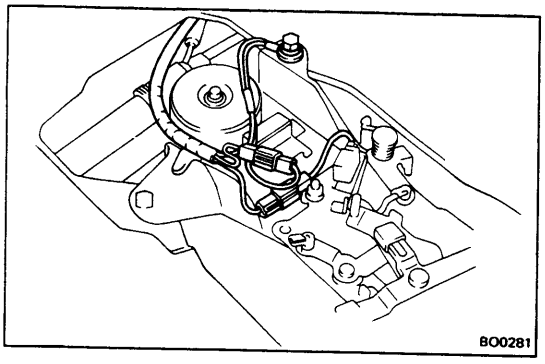

13. CONNECT CONNECTORS AND GROUND CABLE

Connect the two connectors on the regulator, and connect the ground cable with the regulator mount bolt.

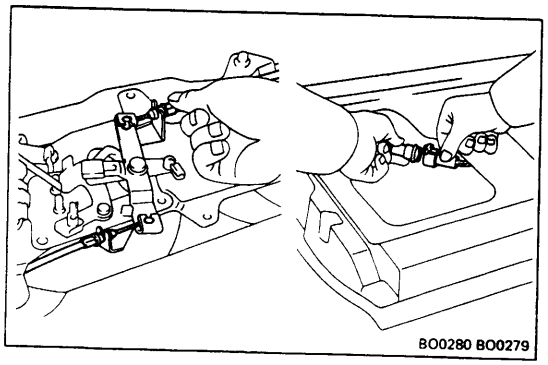

14. CONNECT DOOR LOCK CONTROL CABLES

Connect the door lock control cables on the regulator side.

NOTE: When connecting the door lock control cables, clamp them in the original clamps.

15. CONNECT CONNECTOR TO WINDOW REGULATOR MOTOR

16. INSTALL DOOR UPPER TRIM

17. INSTALL INNER WEATHERSTRIP

18. INSTALL INSIDE LOCK KNOB AND LINK

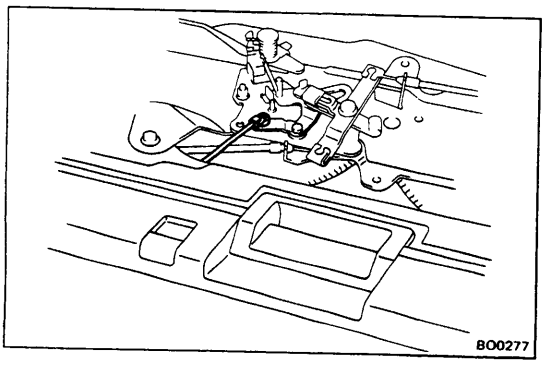

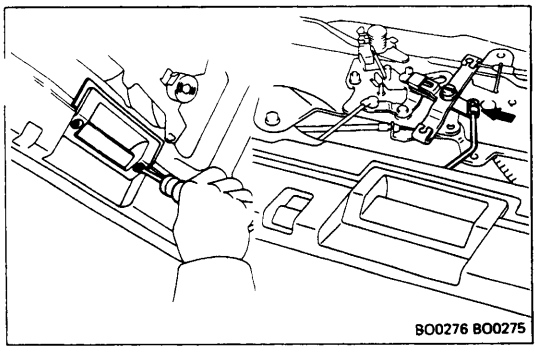

19. INSTALL INSIDE HANDLE

(a) Install the inside handle and two screws.

(b) Connect the control link.

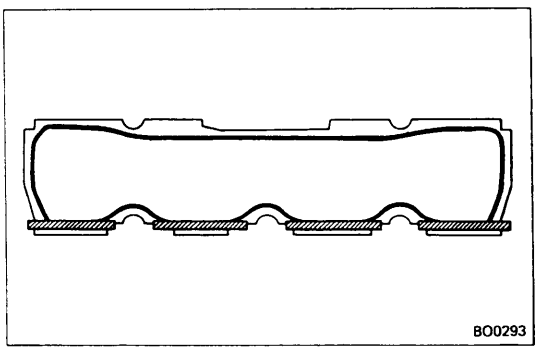

20. INSTALL SERVICE HOLE COVER

(a) Seal the service hole cover with butyl tape (6 mm or 0.24 in. width).

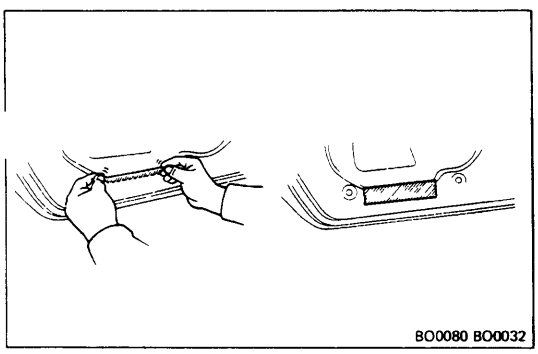

(b) Insert the lower edge of the service hole cover into the panel slit.

(c) Seal the panel slit with cotton tape.

CAUTION: Do not block the trim clip seating with the tape.

21. INSTALL PLATE

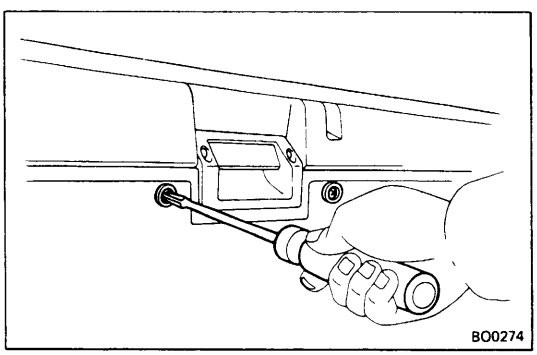

22. INSTALL DOOR TRIM

MOULDING
Windshield Outside Moulding
COMPONENTS

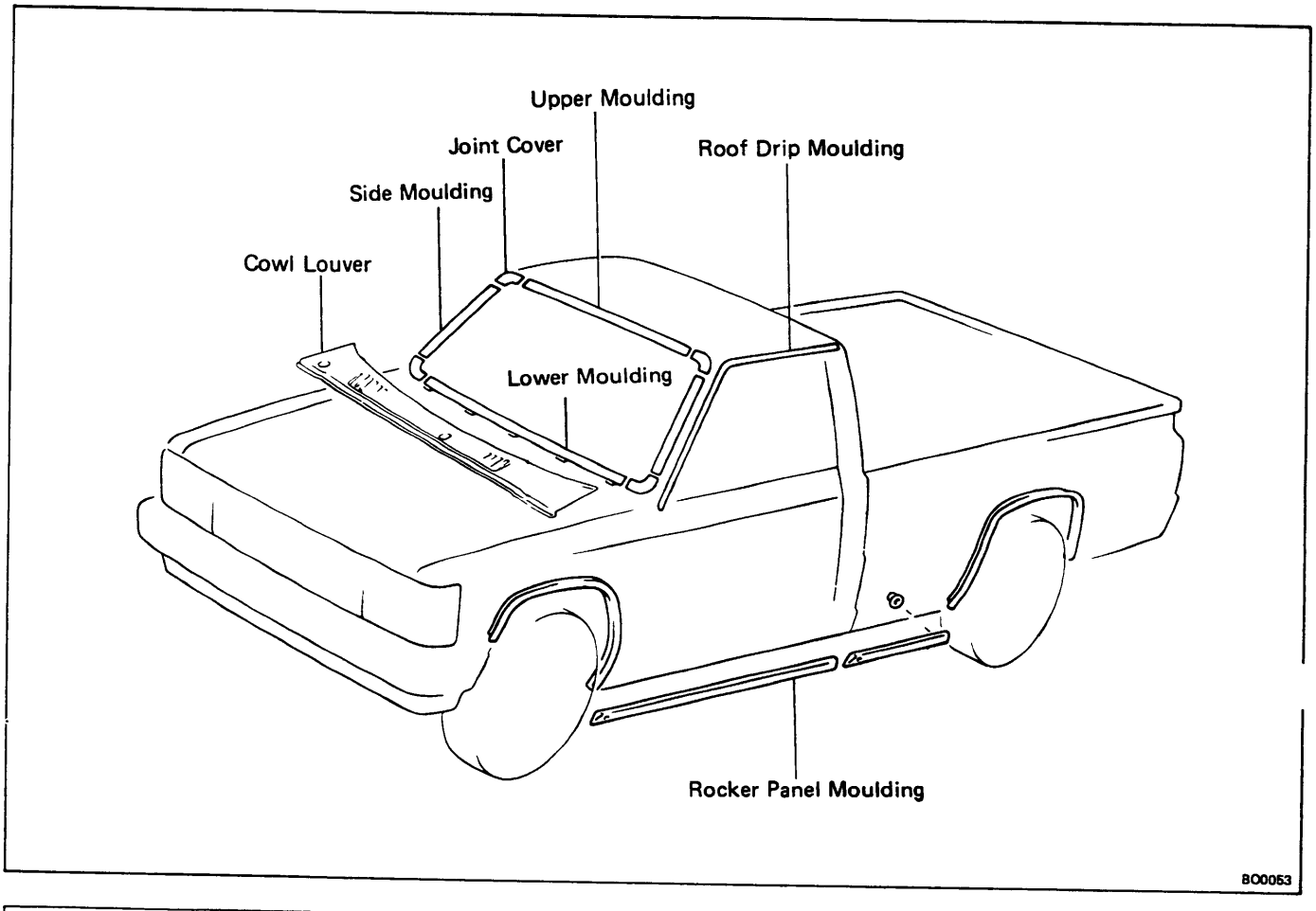

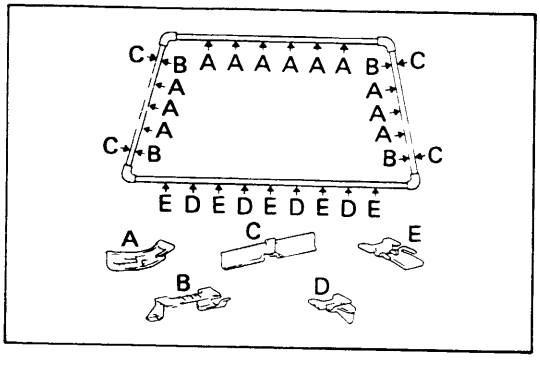

REMOVAL OF OUTSIDE MOULDING

There are two types of clips for moulding installation.

Locations of these clips and fasteners are as shown in the figure.

Carefully apply adhesive tape to protect the body.

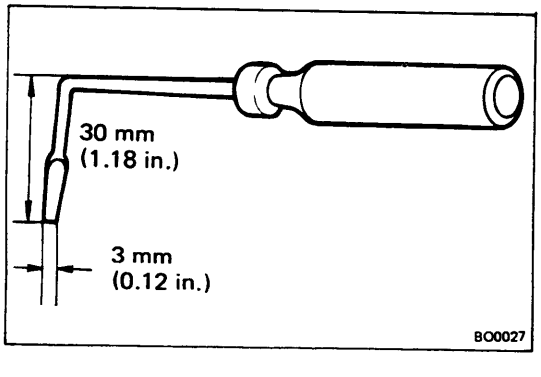

1. **PREPARE A SMALL SCREWDRIVER**

   Use a screwdriver bent at right angle.

2. **REMOVE LOWER JOINT COVER**

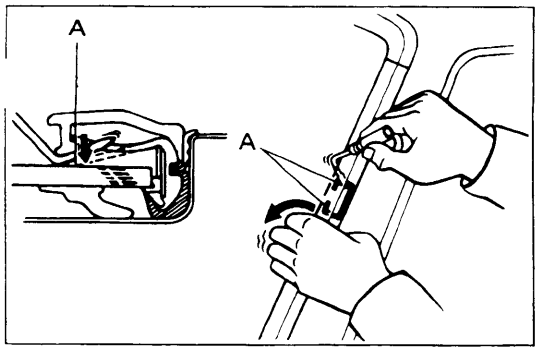

3. REMOVE SIDE MOULDING

(a) Insert the tip of the screwdriver between the moulding and clip, and twist it to pry loose the clasps (A) on the window side.

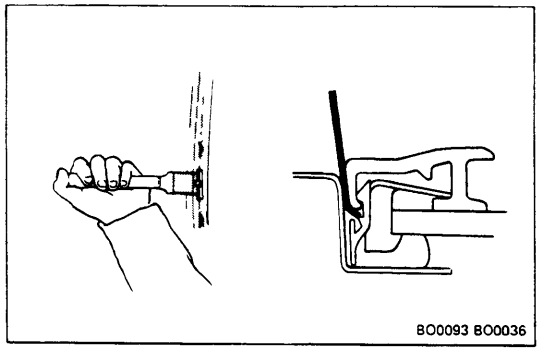

(b) Pry loose the fasteners and clips and remove the moulding.

4. REMOVE UPPER JOINT COVER

Remove the joint cover from the upper moulding.

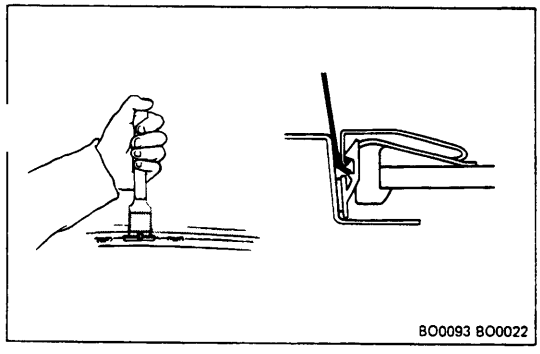

5. REMOVE UPPER MOULDING

(a) Pry loose the fasteners and clips.

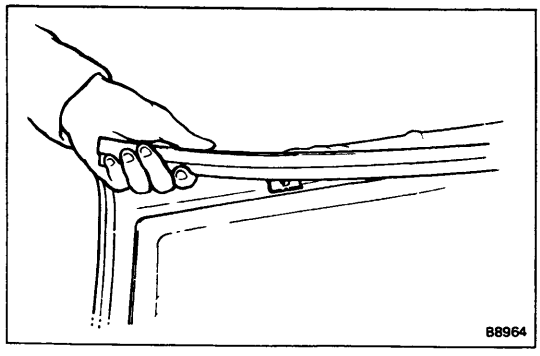

(b) Slide the moulding out.

NOTE: Do not bend the moulding.

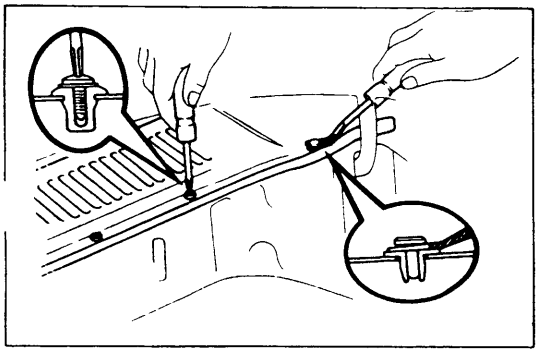

6. REMOVE WIPER ARM

7. REMOVE COWL LOUVER

Remove the two clips and three screws, then and remove the cowl louver.

8. REMOVE LOWER MOULDING

Remove the screws and the moulding.

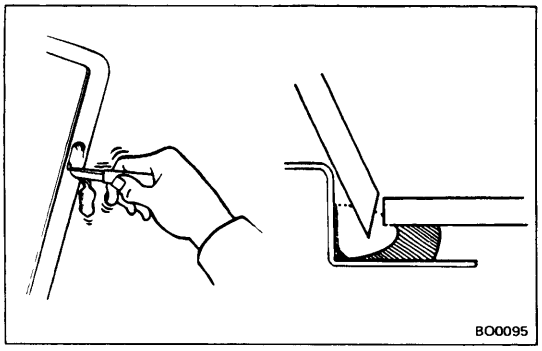

REPLACEMENT OF FASTENER AND CLIP

If any fastener or clip is damaged, replace it.

1. **REMOVE DAMAGED CLIP**
2. **CUT OFF OLD ADHESIVE AROUND CLIP INSTALLATION AREA**
   (a) Grind a notch into the clip so it latches onto the glass edge.

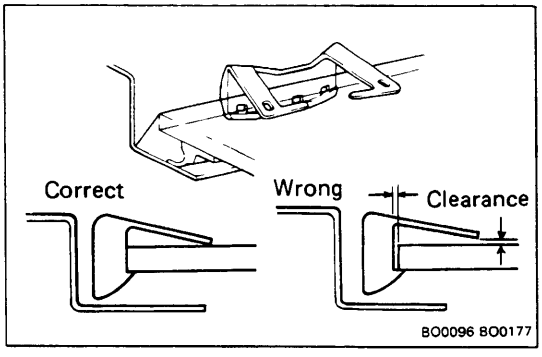

   (b) Temporarily install the clip and insure that it is firmly attached to the glass.

   If the clip is loose, replace it.

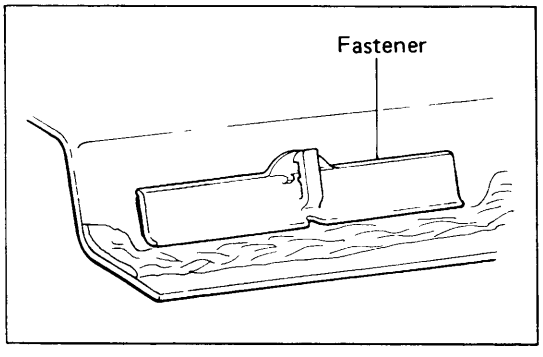

3. **REMOVE ANY DAMAGED FASTENER**
4. **CUT OFF OLD ADHESIVE AROUND FASTENER INSTALLATION AREA**
5. **INSTALL FASTENER ONTO BODY WITH DOUBLE-STICK TAPE**

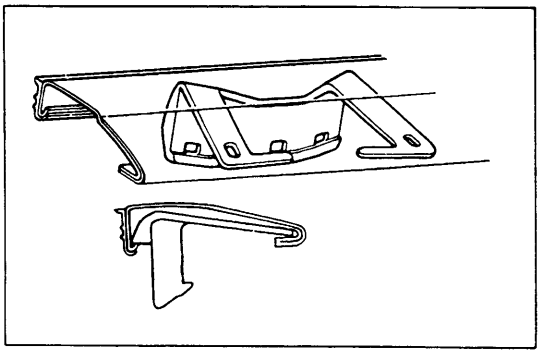

INSTALLATION OF OUTSIDE MOULDING

1. **INSTALL LOWER MOULDING**
   Install the six screws and the moulding.
2. **INSTALL COWL LOUVER**
   Install the two clips, three screws and the cowl louver.
3. **INSTALL WIPER ARM**
4. **INSTALL NEW CLIP INTO MOULDING**
   Install the moulding to the body so that the clips and fasteners are not in a position where they will contact each other.

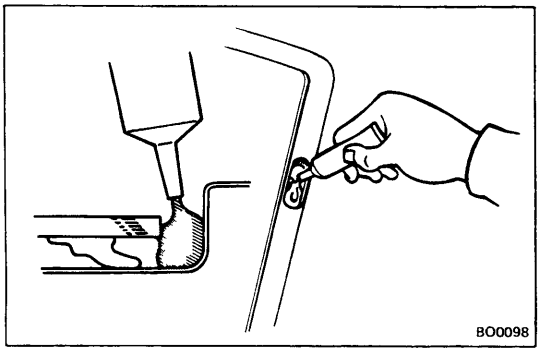

5. **APPLY ADHESIVE AT CLIP INSTALLATION AREA**

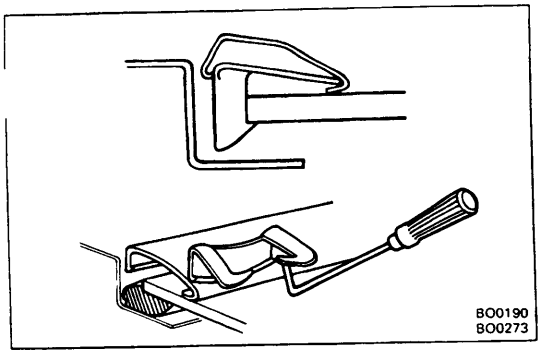

6. INSTALL UPPER MOULDING

(a) Place the moulding onto the body.

(b) Pry up the clips on the body side and install them to the moulding.

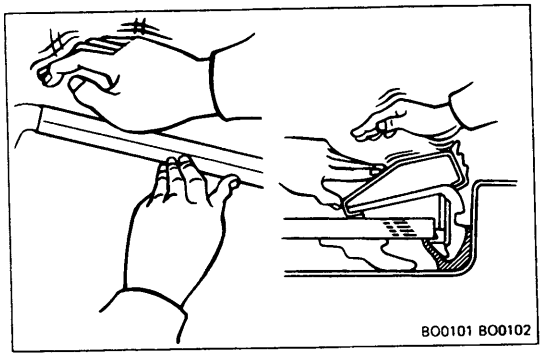

(c) Tap the moulding with your hand to fasten the clips at the glass edge.

At the same time, tap on the fasteners by hand.

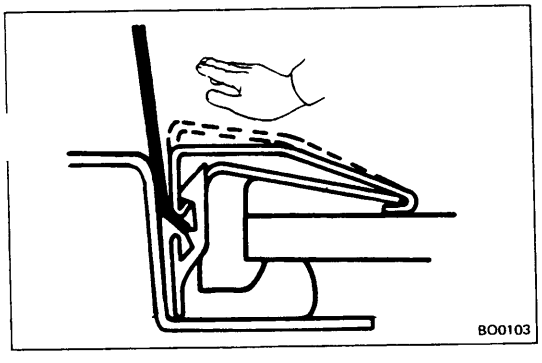

(d) If the moulding is not at the same level as the body, insert a scraper between them and tap on the moulding while pushing on the fastener.

7. INSTALL JOINT COVER

Install the joint cover to the upper moulding and lower moulding.

8. INSTALL SIDE MOULDING IN SAME MANNER AS UPPER MOULDING

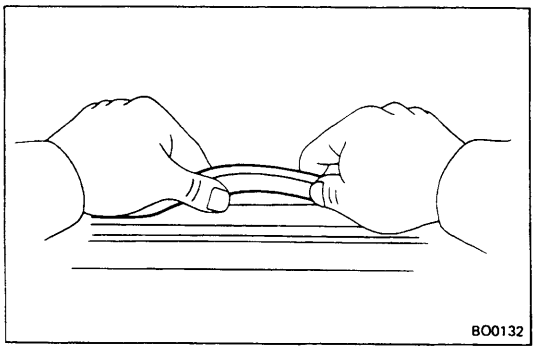

REMOVAL OF ROOF DRIP MOULDING

REMOVE ROOF DRIP MOULDING

Remove the roof drip moulding by hand.

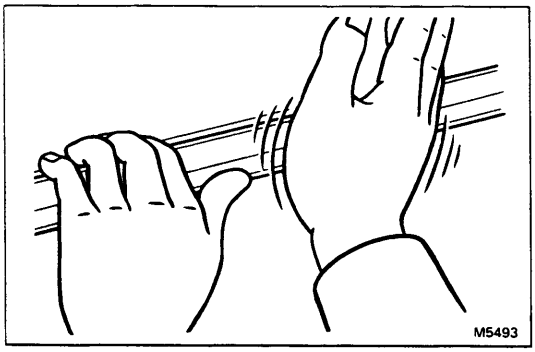

INSTALLATION OF ROOF DRIP MOULDING

INSTALL ROOF DRIP MOULDING

Attach the upper edge of the moulding to the body flange. Tap on the moulding by hand.

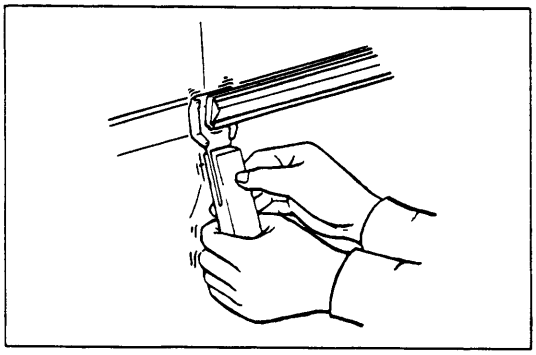

REMOVAL OF ROCKER PANEL MOULDING

REMOVE ROCKER PANEL MOULDING

(a) Remove the set screw.

(b) Using a scraper, pry loose the clip and remove the moulding.

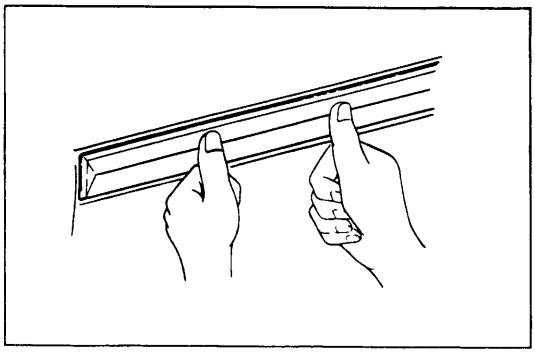

INSTALLATION OF ROCKER PANEL MOULDING

(a) Install the moulding by hand.

(b) Install the set screw.

COVER TOP

COMPONENTS

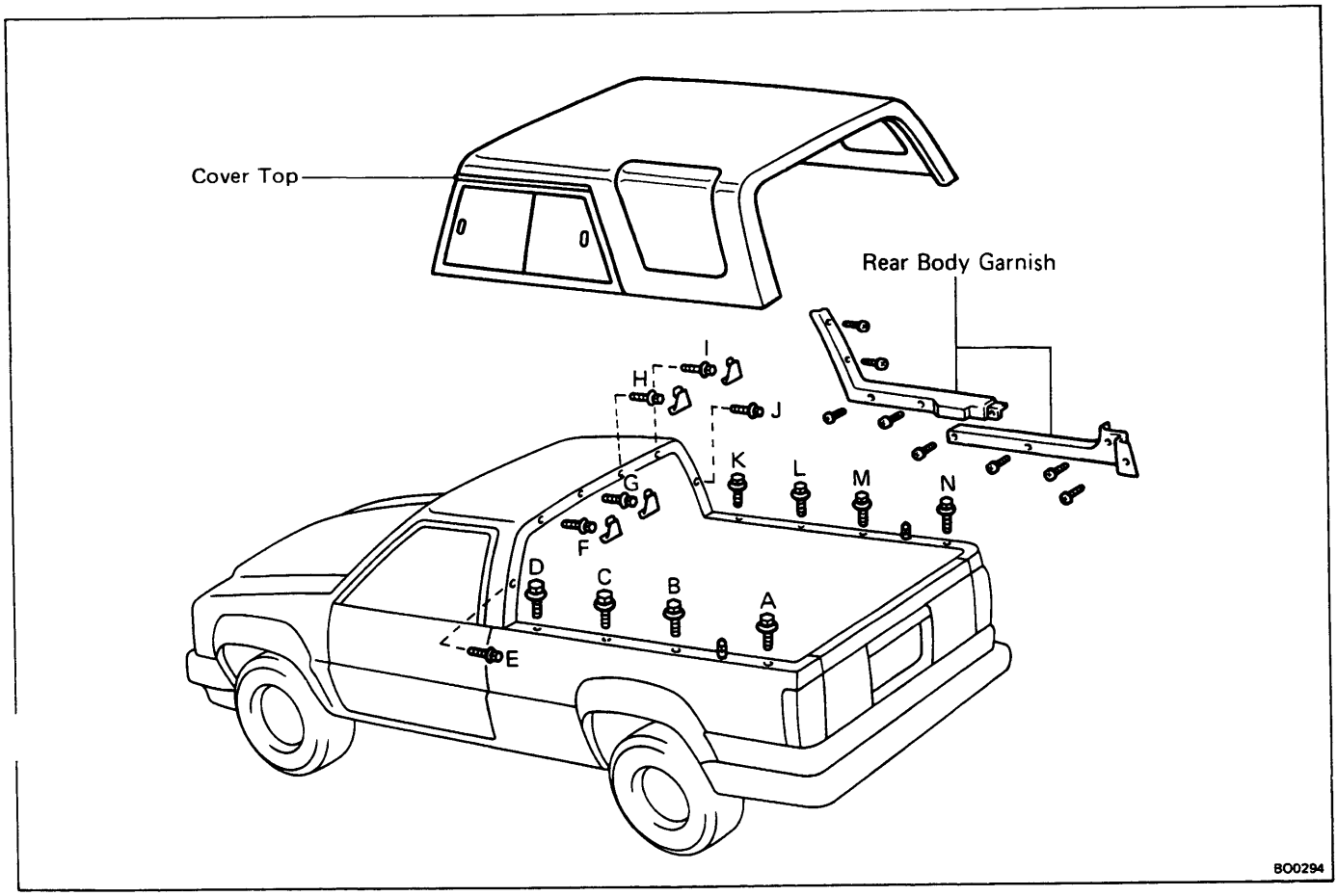

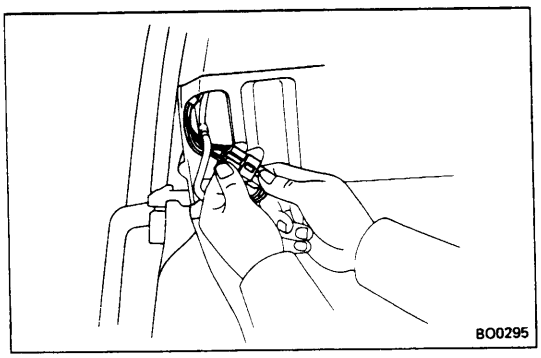

REMOVAL OF COVER TOP

1. **OPEN BACK WINDOW FULLY**
2. **REMOVE REAR BODY GARNISHES**
3. **DISCONNECT CONNECTOR AND WASHER HOSE**

   The connector and washer hose are located on the LH side of the rear body.

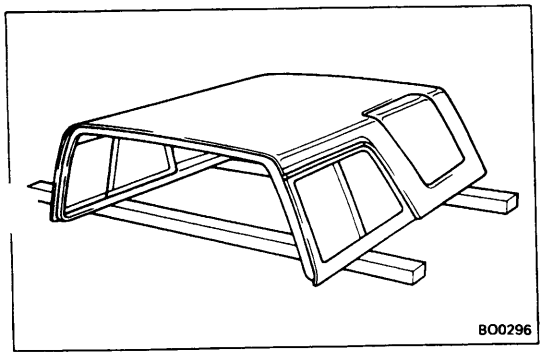

4. **REMOVE COVER TOP**

   (a) Remove bolt "B".

   NOTE: The cover top switch is turned off when bolt "B" is removed. In this condition back door power window cannot be operated.

   (b) Remove the other bolts.

   (c) Take the cover top off.

   NOTE: After removing the cover top, place it on pieces of lumber and do not let it come into direct contact with the ground. Do not place anything on top of the cover.

CAUTION:

1. **While the cover top is removed, nerver reinstall bolt "B" for the purpose of operating the back door po er window.**
2. **If bolt "B" is installed to the deck directly, the cover top switch may get damaged due to over protrusion of the bolt.**

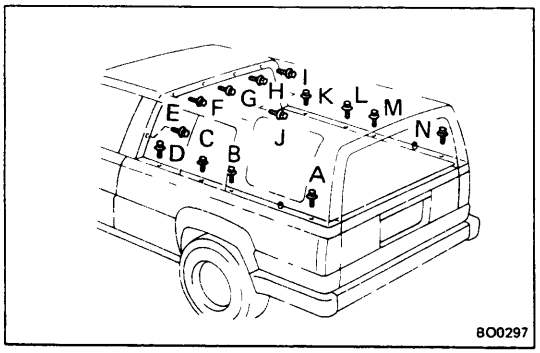

INSTALLATION OF COVER TOP

1. **INSTALL COVER TOP TO FIT PROPER POSITION IN FOLLOWING PROCEDURE**

   CAUTION: Use only genuine Toyota cover top bolts.

   Part No. 90119-08171 or equivalent
   (a) Place the cover top on the deck.
   (b) Tighten bolts "E" and "J".
   (c) Tighten bolts "C" and "L".
   (d) Loosen bolts "E" and "J".
   (e) Tighten bolts "D" and "K".
   (f) Retighten bolts "E" and "J".
   (g) Tighten the other bolts except for bolt "B".
   (h) Tighten the bolt "B".

   NOTE: In this condition as the end of bolt "B" makes cor tact with the cover top switch, the switch should be o

   Torque: 145 kg-cm (10 ft-lb, 14 N·m)

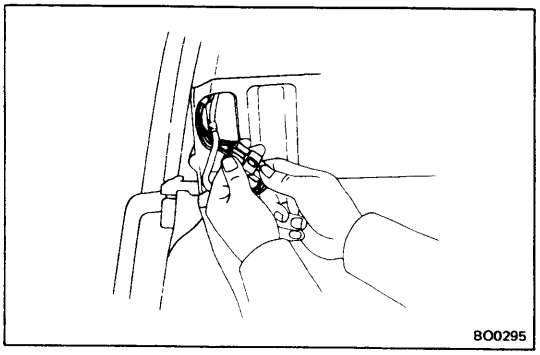

2. **CONNECT CONNECTOR AND WASHER HOSE**

   The connector and washer hose are located on the rear body LH side.

3. **INSTALL REAR BODY GARNISHES**

4. **CLOSE BACK DOOR AND CHECK OPERATION OF BACK DOOR POWER WINDOW**

WINDSHIELD

TOOLS AND SUPPLIES

Part name and Part No.	Contents of set	Quantity
Adhesive set 08850-00070 [0 — 15°C (32 — 59°F)] 08850-00080 [15 — 35°C (59 — 95°F)] 08850-00090 [35 — 45°C (95 — 113°F)]	Main agent 500 g (17.64 oz) Hardening agent 75 g (2.65 oz) Primer G [for glass] 20 g (0.71 oz) Primer M [for body] 20 g (0.71 oz) Sponge for applying primer Piano wire 0.6 mm dia. x 1 m (0.024 in.dia x 39.37 in.) Cartridge	1 can 1 ea. 1 ea. 1 ea. 1 ea. 1 ea. 1 ea.
Dam kit 04562-30030	Dam Double-stick tape (for sticking on dam)	
	Sealant gun (for applying adhesive) Glass or steel sheet (for mixing adhesive) Putty spatula (for mixing adhesive and correcting adhered parts) Solvent (alcohol, lead-free gasoline)for cleaning adhering surfaces	

Ambient temperature	Part No.	Part name
0 — 15°C (32 — 59°F)	08850-00070	Windshield glass adhesive set No. 15
15 — 35°C (59 — 95°F)	08850-00080	Windshield glass adhesive set No. 35
35 — 45°C (95 — 113°F)	08850-00090	Windshield glass adhesive set No. 45

1. CHOOSE SUITABLE ADHESIVE SET

Use an adhesive set suitable for the ambient temperature.

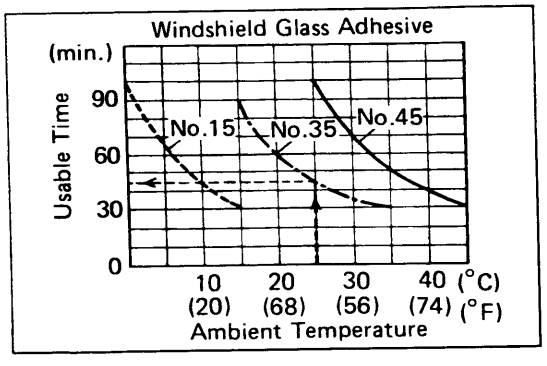

2. CHECK ADHESIVE USABLE TIME

After the mixing main and hardening agents, finish glass installation within the specifield time as shown.

Example:
For glass installation in an ambient temperature of 25°C (77°F), apply adhesive set No.35 within 45 minutes.

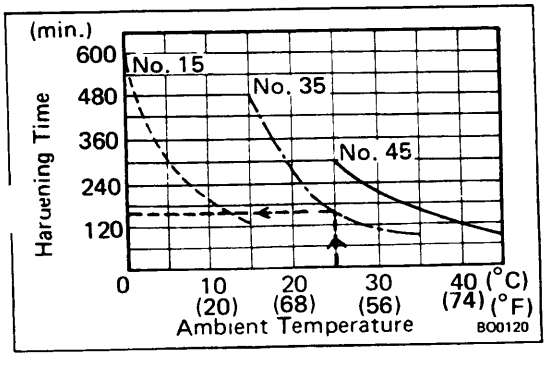

3. CHECK ADHESIVE HARDENING TIME

First, mix the main and hardening agents. Then, perform a leak test only after the hardening time has elapsed.

Example:
The hardening time for adhesive set No.35 with an ambient temperature of 25°C (77°F) is 2 1/2 hours.

CAUTION: Do not drive the vehicle until at least double the hardening time has elapsed.

COMPONENTS

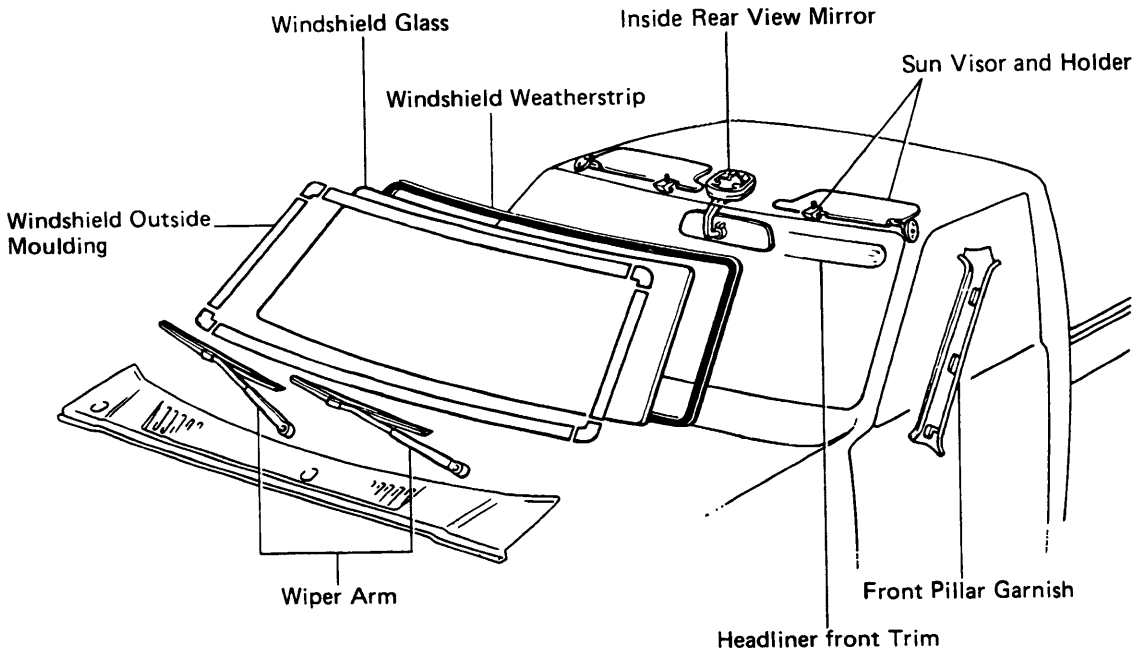

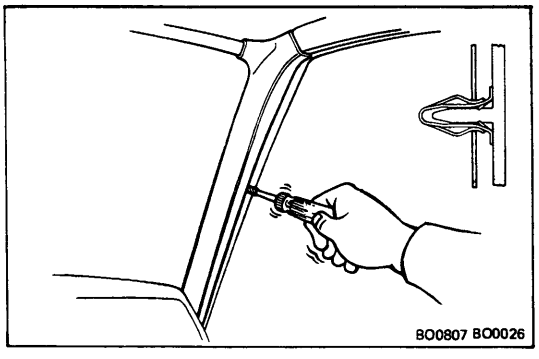

REMOVAL OF WINDSHIELD

1. REMOVE FRONT PILLAR GARNISH

(a) Pry out the clips with a screwdriver.

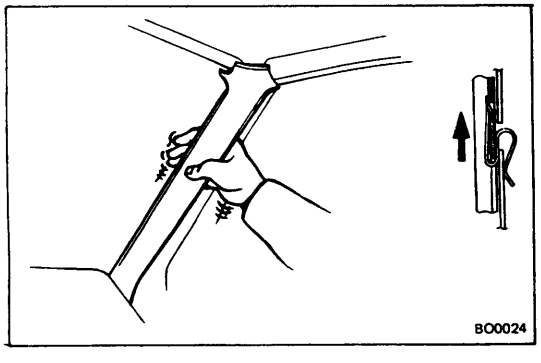

(b) Pull the garnish upward to remove it.

2. **REMOVE FOLLOWING PARTS:**
   (a) Inner rear view mirror
   (b) Roof headliner front trim
   (c) Sun visor and holder
3. **REMOVE WIPER ARM**
4. **REMOVE WINDSHIELD MOULDING (See page BO-26)**

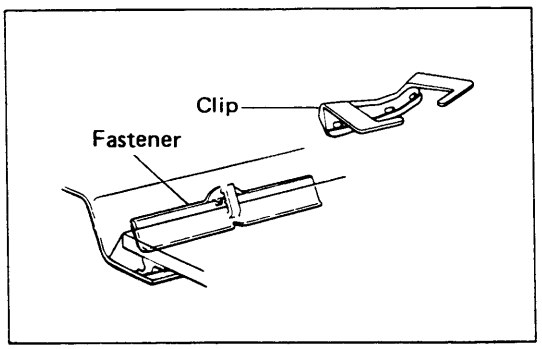

5. **REMOVE CLIPS**
   Be careful not to damage the clips when removing them from around the glass.
   NOTE: Do not remove the fasteners, but replace any that are deformed.

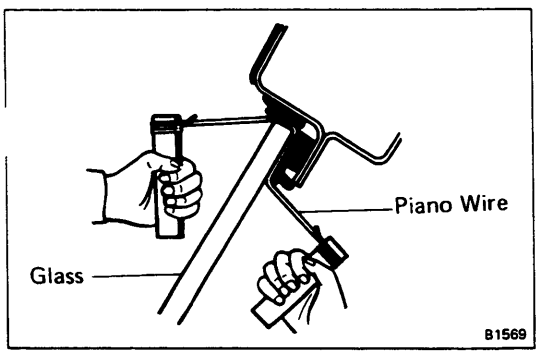

6. **REMOVE WINDSHIELD GLASS**
   (a) Push piano wire through from the interior.
   (b) Tie both wire ends to a wooden block or equivalent.
   CAUTION: When separating, take care not to damage the paint or interior and exterior ornaments.

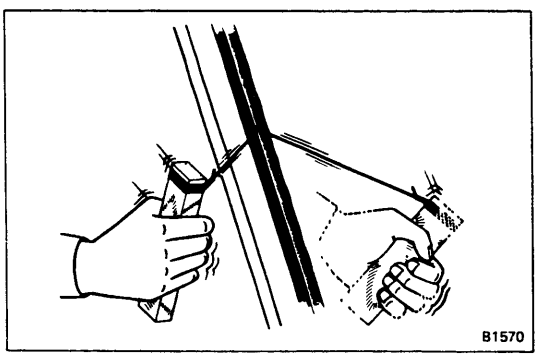

   (c) Cut the adhesive by pulling the piano wire around it.
   (b) Remove the glass.
   CAUTION: Cut off the glass, leaving as much of the urethane layer on the body as possible.

INSPECTION AND CLEANING

1. **CLEAN CONTACT SURFACE OF BODY**
   (a) Remove any dam remaining on the body.
   NOTE: Leave as much urethane layer on the body as possible.

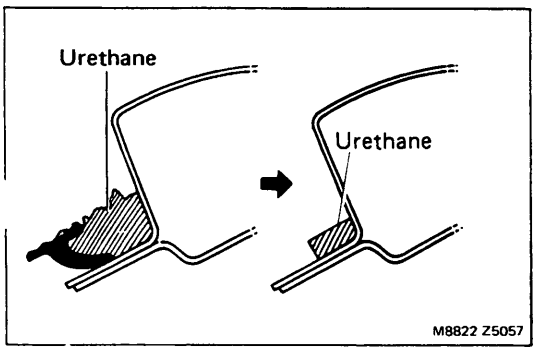

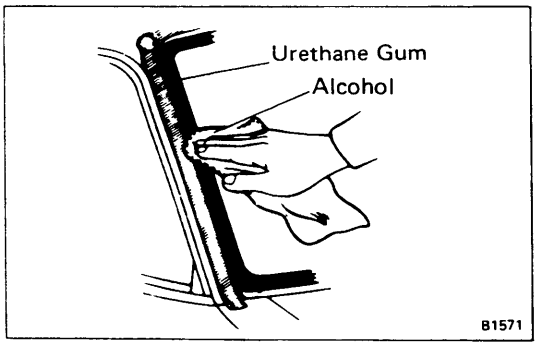

(b) Clean the cutting surface of the urethane gum with a piece of cloth saturated in solvent (alcohol).

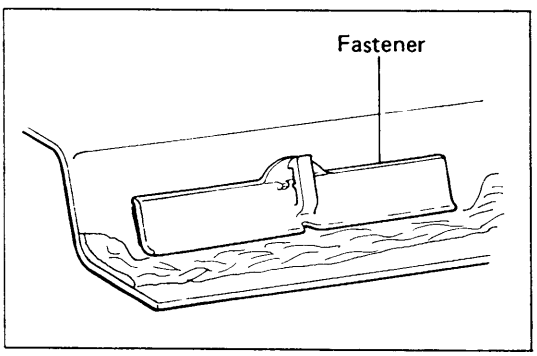

2. IF FASTENERS ARE DAMAGED

(a) Remove any damaged fastener.

(b) Cut off the old adhesive around the fastener installation area.

(c) Install a new fastener.

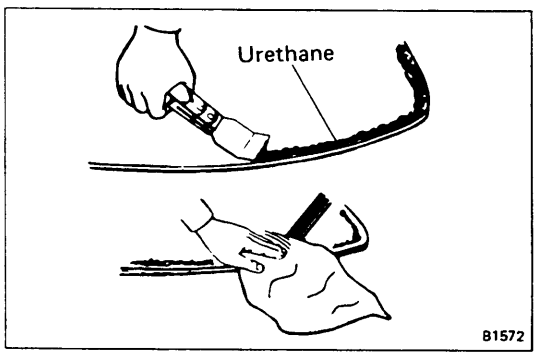

3. CLEAN REMOVED GLASS BEFORE INSTALLATION

(a) Using a scraper, remove the urethane gum sticking to the glass.

(b) Clean the glass with alcohol.

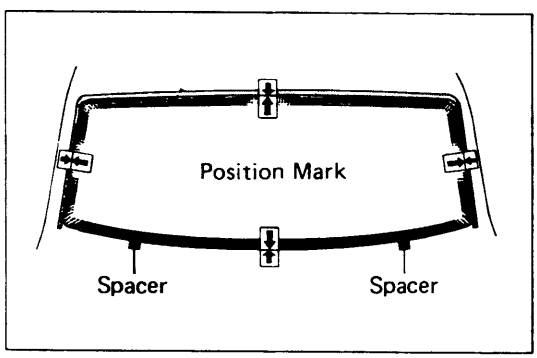

4. POSITION GLASS

(a) Place the glass in correct position.

(b) Check that all contacting parts of the glass rim are perfectly even and do not make contact with the fasteners.

(c) Make reference marks between the glass and body.

(d) Remove the glass.

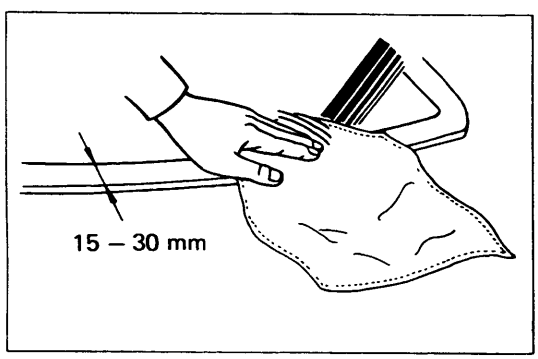

5. CLEAN CONTACT SURFACE OF GLASS

Using alcohol or similar solvent, clean the contact surface 15 — 30 mm (0.59 — 1.18 in.) wide around the entire glass rim.

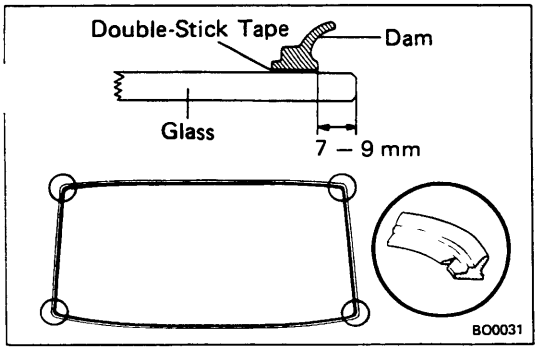

INSTALLATION OF WINDSHIELD

1. INSTALL DAM

(a) Apply double-stick tape at a point 7 — 9 mm (0.28 — 0.35 in.) from the glass rim.

(b) Place the dam on the double-stick tape.

NOTE: Cut a V-wedge into the corner folds of the dam.

CAUTION: Do not touch the glass face after cleaning it.

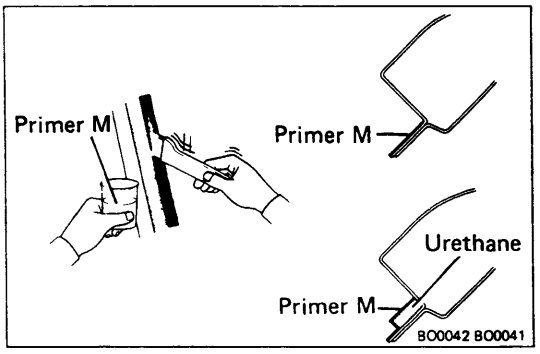

2. COAT CONTACT SURFACE OF BODY WITH PRIMER "M"

Using a brush, coat the contact surface on the body with Primer M.

CAUTION:

- **Let the Primer coating dry for 10 minutes or more. Make sure that the installation of the glass is finished within 2 hours.**
- **Use care not to leave any part of the contact surface uncoated or excessively coated, as Primer M and G serve to boost the adhesive power of the urethane to the glass or body.**
- **Do not keep any of the opened Primer M and G for later use.**

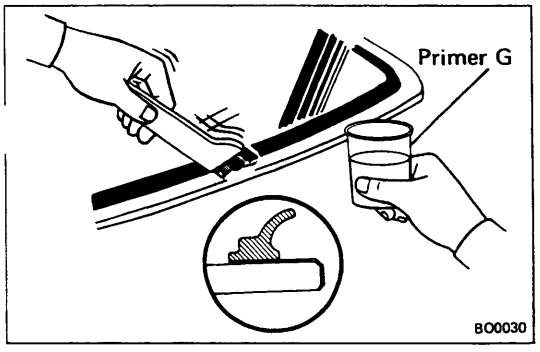

3. COAT CONTACT SURFACE OF GLASS WITH PRIMER "G"

(a) Using a brush or sponge, coat the edge of the glass and the contact surface with Primer G.

(b) Before the primer dries, wipe it off with a clean cloth.

CAUTION: Be sure that installation of the glass is finished within 70 minutes.

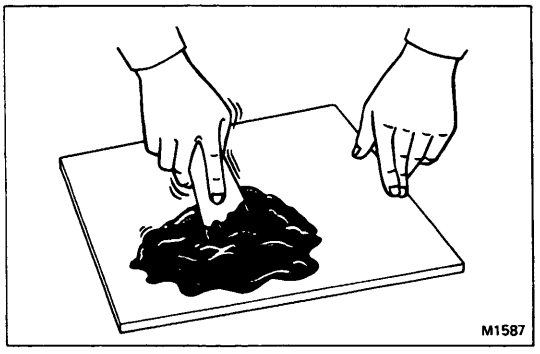

4. MIX ADHESIVE COATING

CAUTION:

- **Be sure that installation of the glass is finished within usable time. (See step 2 on page BO-15)**
- **The mixture should be made in 5 minutes or less.**

(a) Thoroughly clean the glass plate and putty spatula with solvent.

(b) Using a putty spatula, thoroughly mix the main 500 g (17.64 oz) and hardening agents 75 g (2.65 oz) on a glass plate or such.

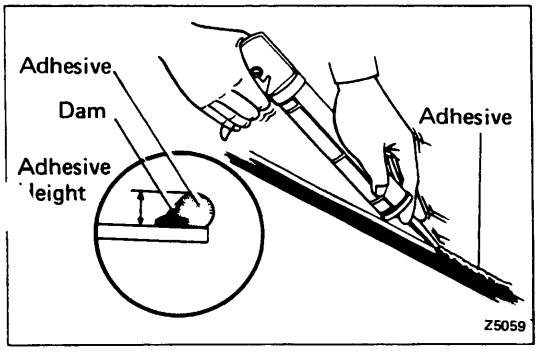

5. APPLY ADHESIVE

(a) Cut off the tip of the cartridge nozzle, making a hole 5 mm (0.20 in.) in diameter. Fill the cartridge with adhesive.

(b) Load the cartridge into the sealer gun.

(c) Coat the glass with adhesive on all contact surfaces along the ridge.

Adhesive thickness:

If there is adhesive on the body
3.5 — 5.0 mm (0.138 — 0.197 in.)

If there is no adhesive on the body
8 — 10 mm (0.31 — 0.39 in.)

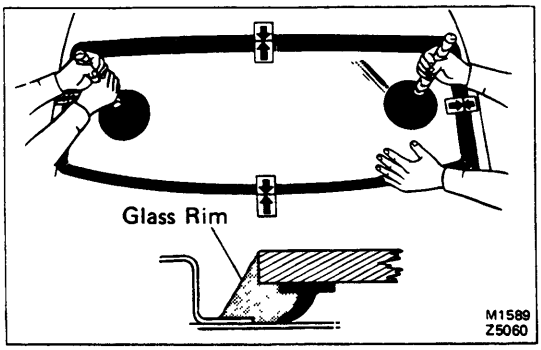

6. INSTALL GLASS

(a) Position the glass so that the reference marks are lined up, and press in gently along the rim.

(b) Using a spatula, apply adhesive to the glass rim.

(c) Use a spatula to remove any excess or protruding adhesive.

(d) Fasten the glass securely until the adhesive sets.

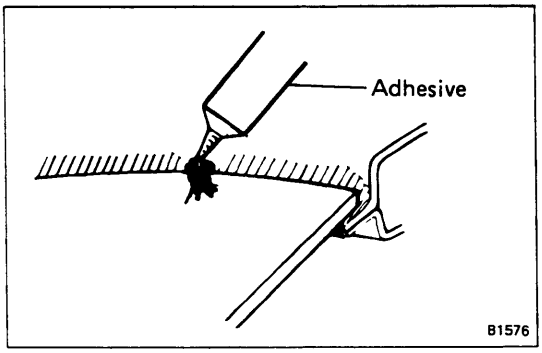

7. INSPECT FOR LEAKS AND REPAIR

(a) Perform a leak test after the hardening time has elapsed.

(b) Seal any leak with adhesive or auto glass sealer.

Part No. 08705-00010

CAUTION: Wait at least twice the hardening time before driving the car.

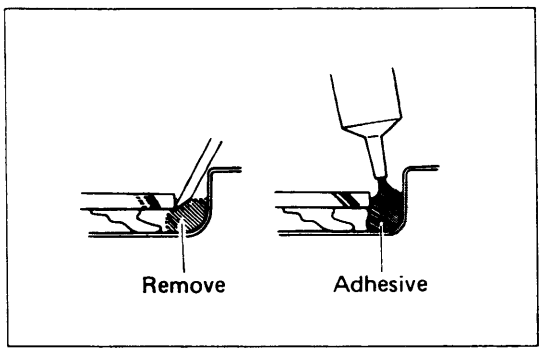

8. INSTALL OUTSIDE MOULDING

(a) Using a knife, remove the adhesive around the installation area of the clips.

(b) Apply adhesive to the installation area of the clip

NOTE: Loosely install the clips and confirm that the clip arm is not protruding above the surface.

(c) Install the clips into the moulding.
When installing the moulding, be sure that the clips and fasteners on the body side do not make contact.

(d) Install the outside moulding.

- Install lower moulding.
- Fit on the upper moulding and tap the fasteners on by hand.
- Install the side moulding and slide down the moulding.
- Install the corner joint moulding.

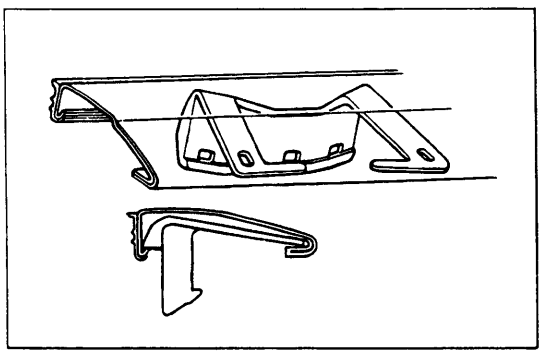

9. INSTALL FOLLOWING PARTS:

(a) Roof headliner front trim

(b) Inner rear view mirror

(c) Sun visor and holder

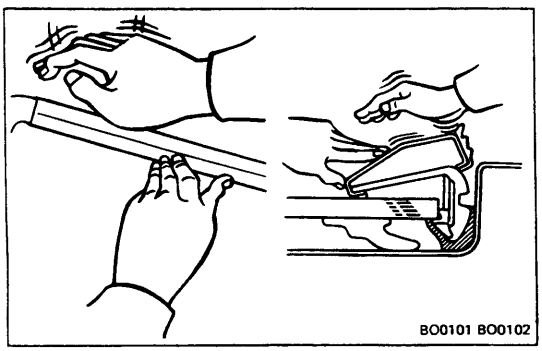

10. INSTALL WIPER ARM

11. INSTALL FRONT PILLAR GARNISH

SIDE SLIDE WINDOW

COMPONENTS

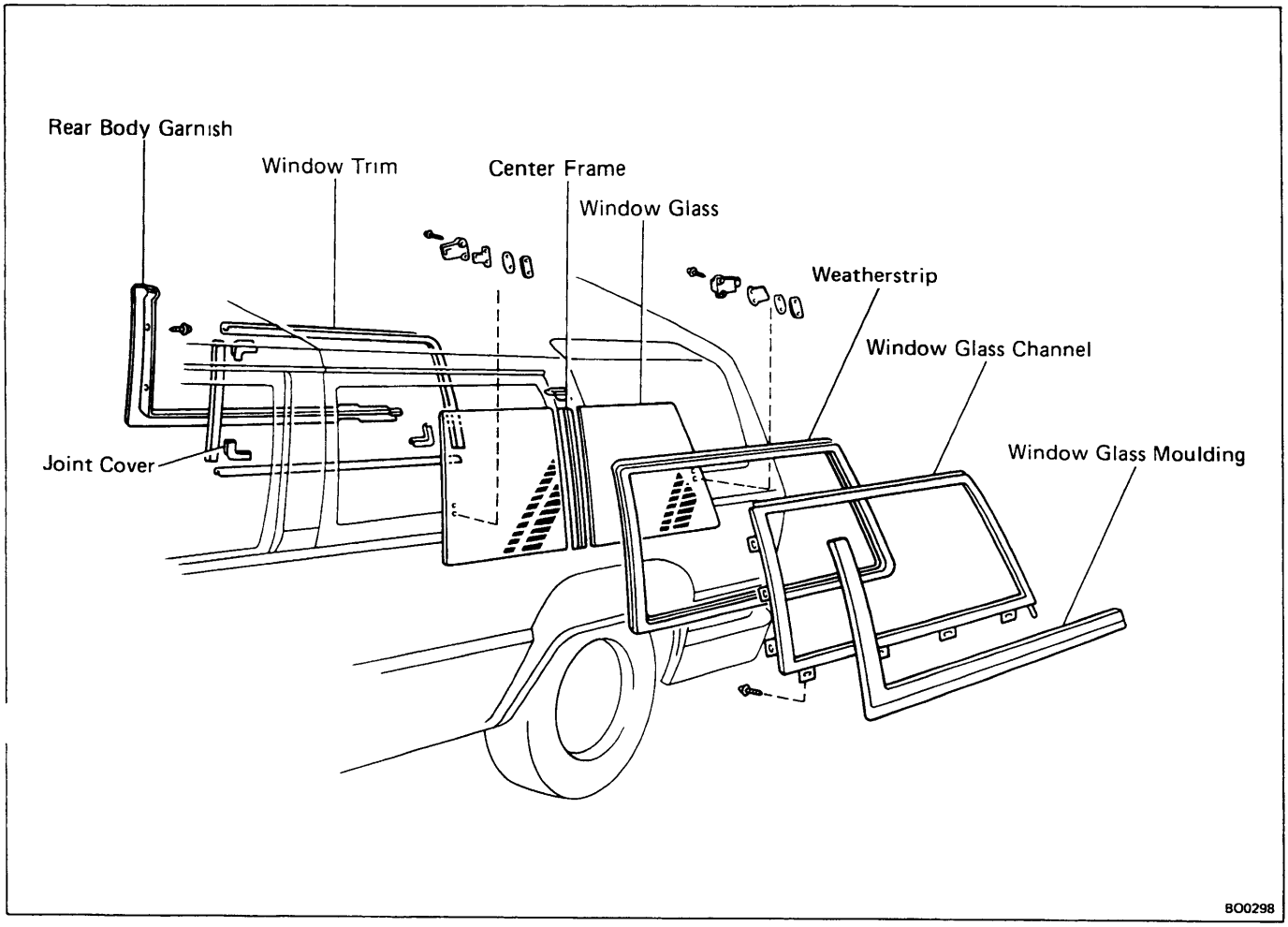

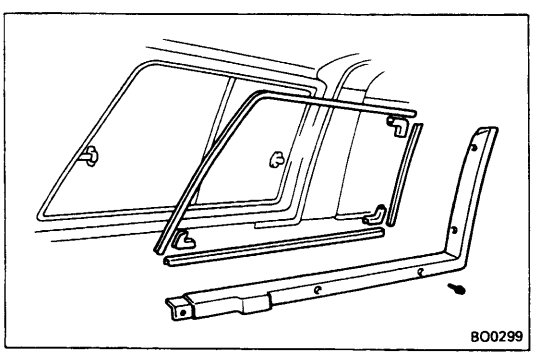

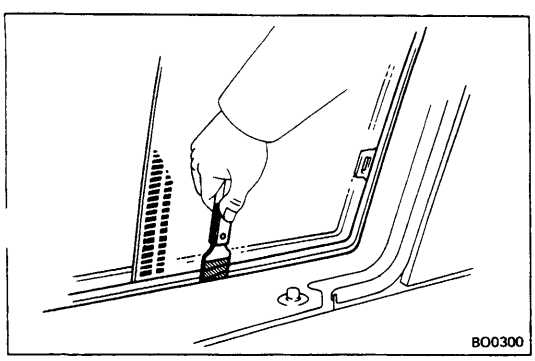

REMOVAL OF SIDE SLIDE WINDOW

1. **REMOVE REAR BODY GARNISHES**
2. **REMOVE JOINT COVERS**
   Remove the three joint covers.
3. **REMOVE WINDOW TRIMS**
   Remove the three window trims.
4. **REMOVE SIDE SLIDE WINDOW ASSEMBLY**
   Cut the butyl tape with a scraper or such and then push the window assembly outward.

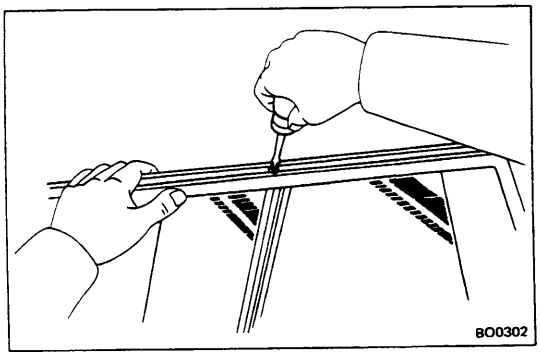

5. DISASSEMBLE SIDE SLIDE WINDOW

(a) Remove the seven screws and window glass moulding.

(b) Remove the two screws of the center frame.

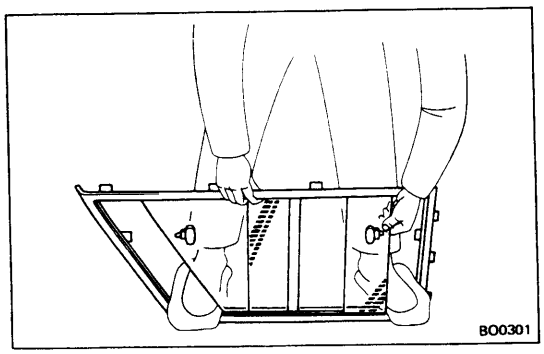

(c) Pull apart the channels and remove the front glass of the two slide glass panes at the center glass channel.

(d) Remove the center frame.

(e) Pull apart the channels and remove the rear glass of the two slide glass panes at the center glass channel.

(f) Remove the weatherstrip.

INSTALLATION OF SIDE SLIDE WINDOW

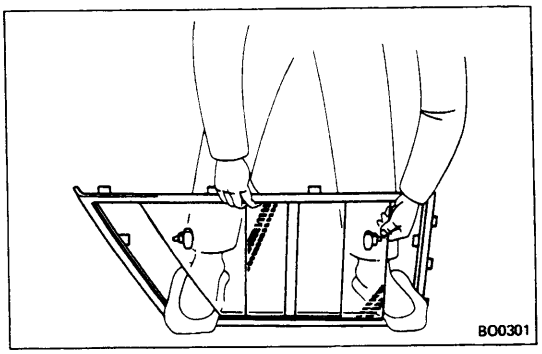

1. ASSEMBLE SIDE SLIDE WINDOW

(a) Install the weatherstrip to the frame.

(b) Pull apart the channels and install the rear glass of the two slide glass panes at the center glass channel.

(c) Install the center frame.

(d) Pull apart the channels and install the front glass of the two slide glass panes at the center glass channel.

(e) Install the two screws of the center frame.

(f) Install the window glass moulding and the seven screws.

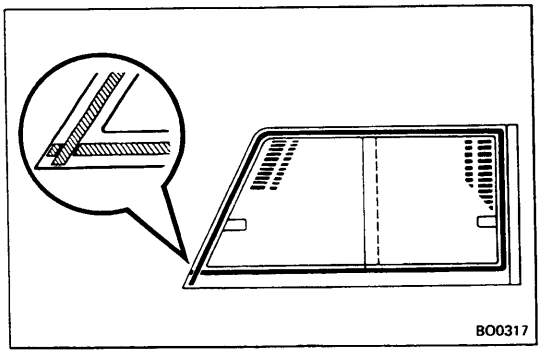

2. APPLY BUTYL TAPE TO WINDOW FRAME

Apply butyl tape (6 mm or 0.24 in. width) to the slide window frame as shown in the figure.

NOTE: Firmly press down the overlapping portions of the tape so there are no open gaps.

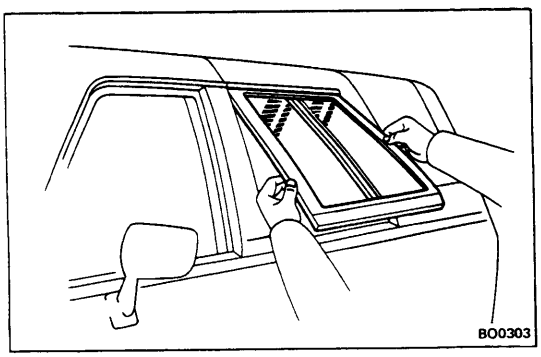

3. INSTALL WINDOW ASSEMBLY

Install the side slide window assembly to the cover top.

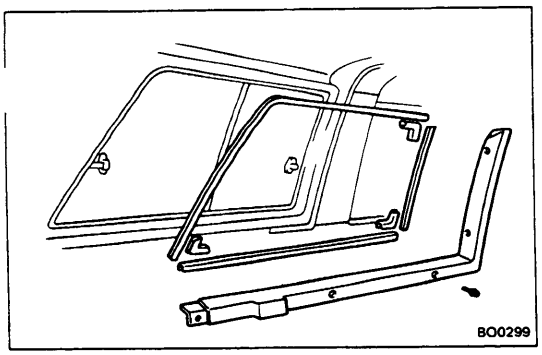

4. **INSTALL WINDOW TRIMS AND JOINT COVERS**

   Install the three window trims and joint covers.

5. **INSTALL REAR BODY GARNISHES**

QUARTER WINDOW (4 RUNNER)

COMPONENTS

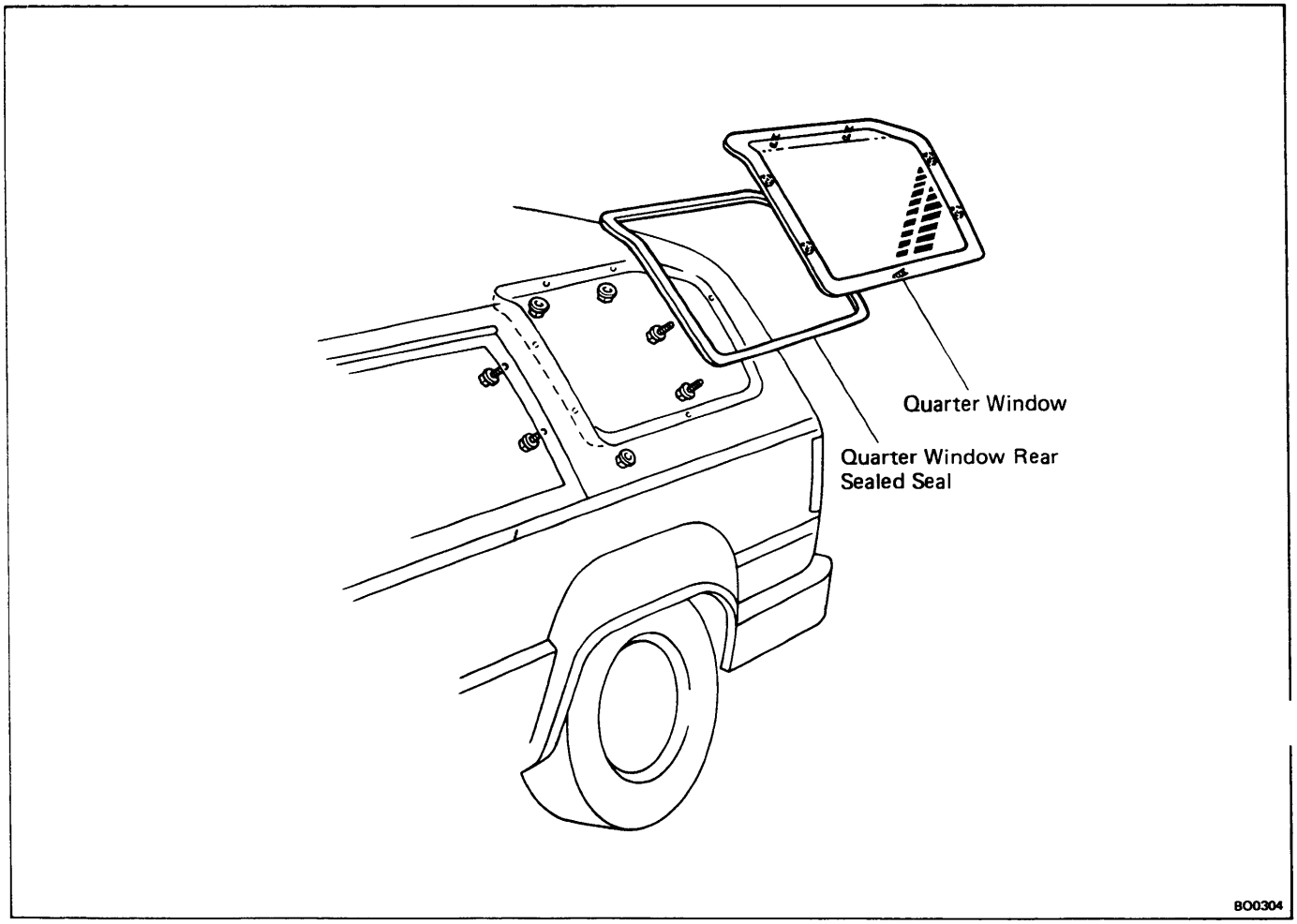

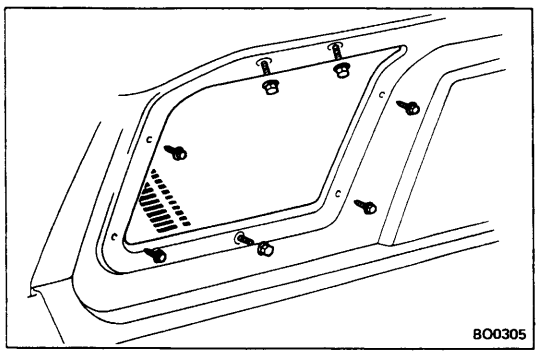

REMOVAL OF QUARTER WINDOW

1. **REMOVE NUTS AND BOLTS**

   Remove the three nuts and four bolts.

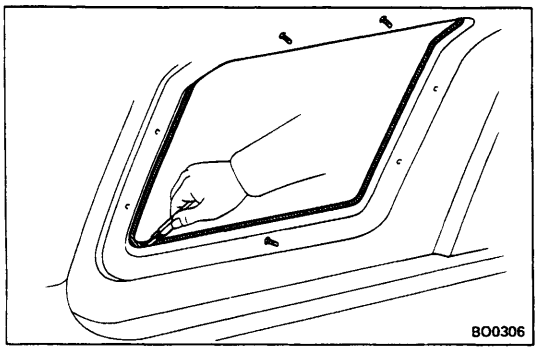

2. **REMOVE QUARTER WINDOW GLASS**

   Using a knife, cut off the window glass seal.
   Push out the lower edge of the glass, and then raise the glass to remove it.

INSTALLATION OF QUARTER WINDOW

1. PREPARE ITEMS LISTED

Part name and Part No.	Contents of set
Butyl tape set (08850 — 00065)	Butyl tape 9 mm dia. x 2,500 mm (0.35 x 98.43 in.) Primer 5 cc (0.2 oz) Sponge (for applying primer) Piano wire 1 mm dia. x 600 mm (0.04 x 23.62 in.) (for cutting around glass)
Materials required	Solvent (Alcohol, unleaded gasoline) (for cleaning adhering surfaces)
Quarter window rear sealed seal (68177 — 89101)	

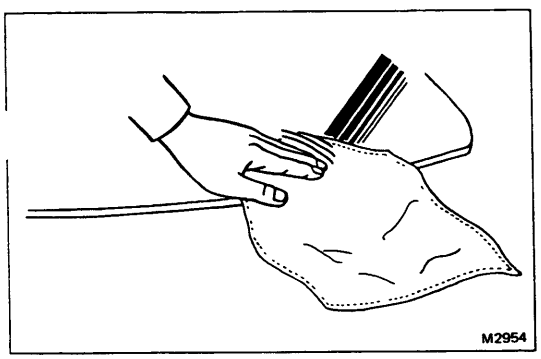

2. CLEAN BODY OR GLASS

Using alcohol or unleaded gasoline, wipe off any adhesive left on body or glass.

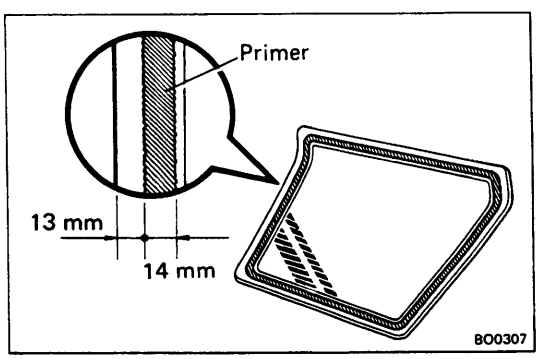

3. INSTALL QUARTER WINDOW GLASS

(a) Using a sponge, coat the glass adhering surface with primer.

NOTE: Coat the primer 13 mm (0.51 in.) from the glass edge and 14 mm (0.55 in.) wide around the ceramic.

(b) Let the primer coating dry for 10 minutes.

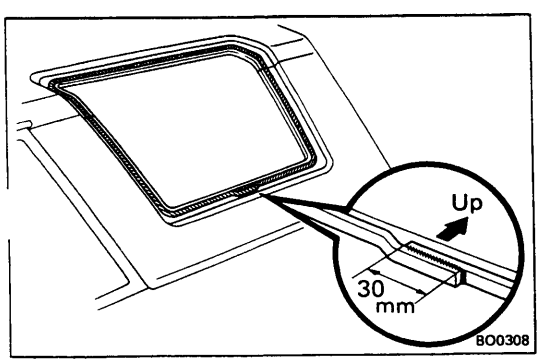

(c) Install the seal to the cover top body.

NOTE: Apply the seal over 30 mm (1.18 in.) of the lower area.

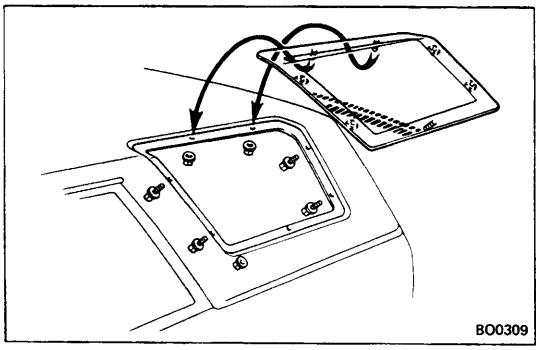

(d) Install the two upper stud bolts to the cover top body.

(e) Install the lower stud bolt to the cover top body.

(f) Torque the upper two nuts, and then the lower nut and four bolts.

Torque: 40 kg-cm (35 in.-lb, 3.9 N·m)

QUARTER WINDOW (TRUCK)

COMPONENTS

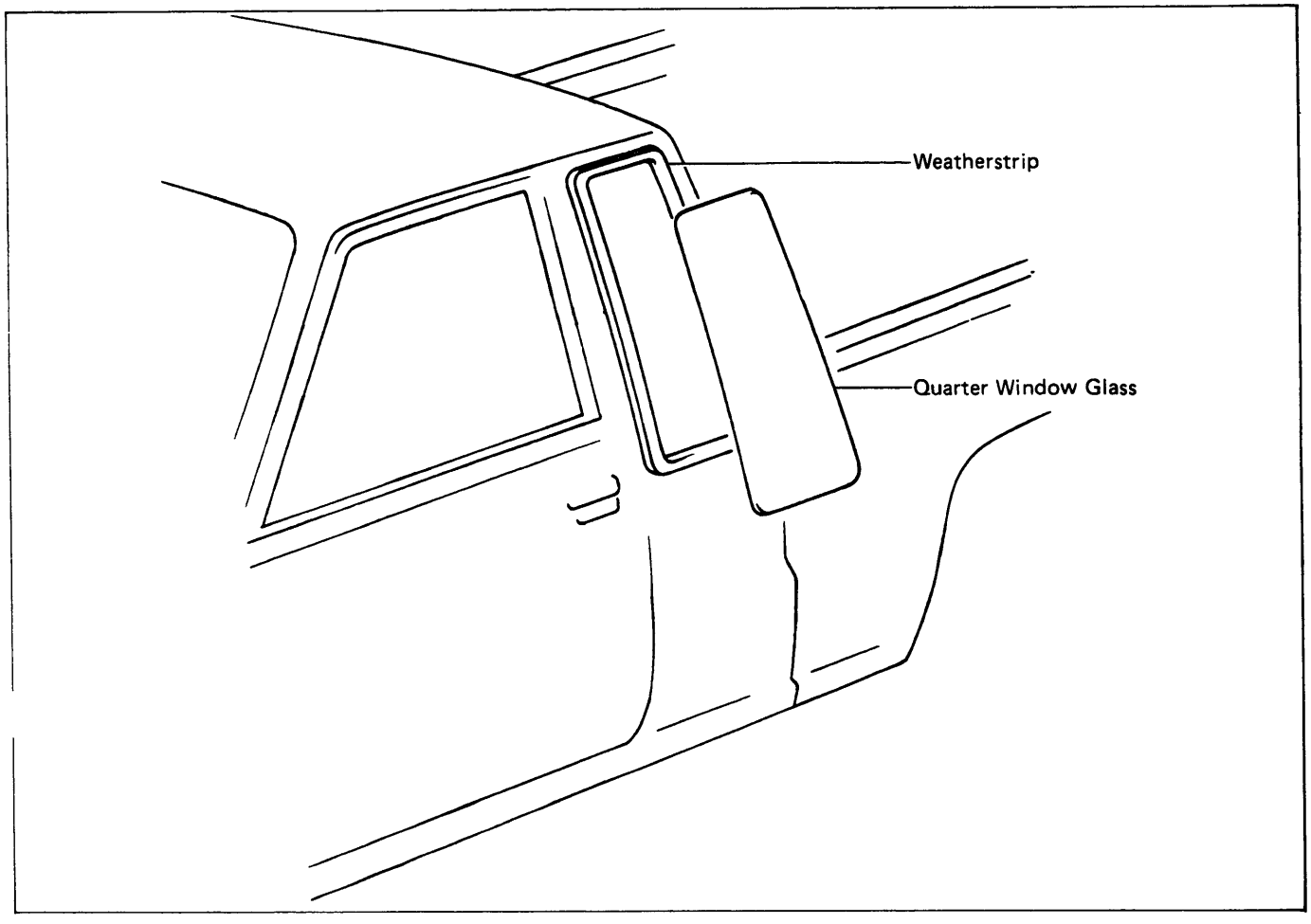

REMOVAL OF QUARTER WINDOW

(See page BO-38)

INSTALLATION OF QUARTER WINDOW

(See page BO-39)

BACK WINDOW

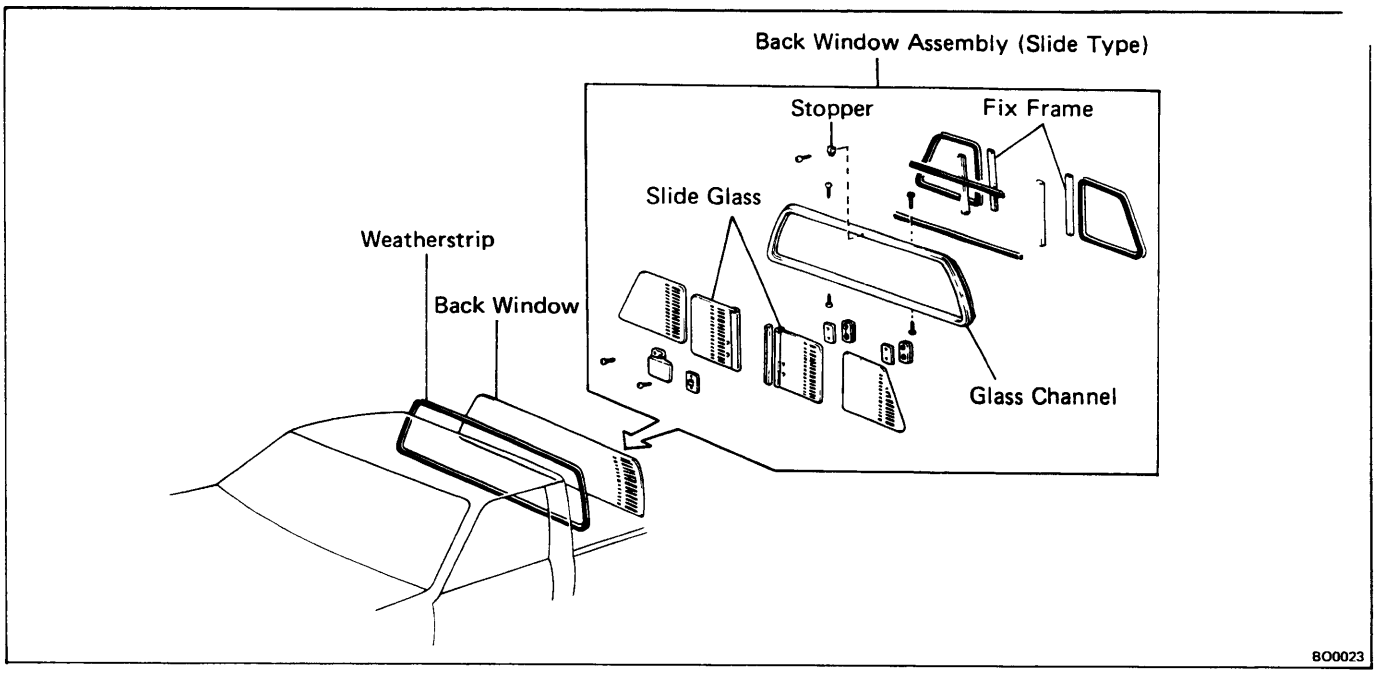

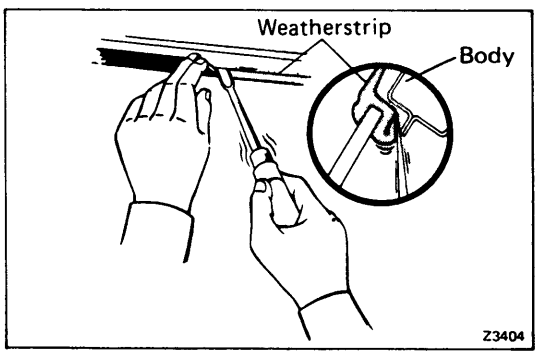

REMOVAL OF BACK WINDOW

REMOVE BACK WINDOW

Force the weatherstrip lip from the interior to the bor' flange outside. Pull the back window outward and remov- it with the weatherstrip.

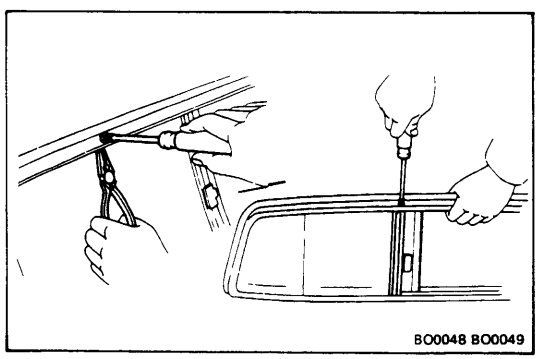

DISASSEMBLY OF BACK WINDOW ASSEMBLY (SLIDE GLASS TYPE)

1. **REMOVE FOLLOWING PARTS:**
   (a) Back window slide glass stopper
   (b) Four screws holding the two fix frames

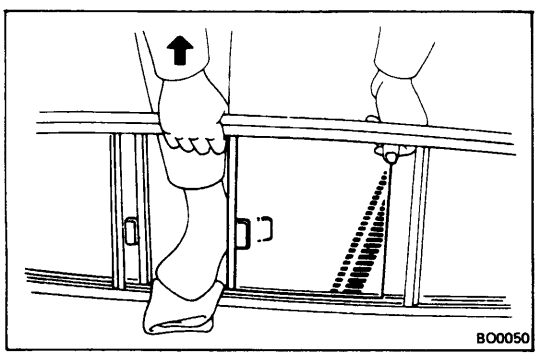

2. **REMOVE SLIDE GLASS**

Pull apart the channels and remove the two slide glass panes at the center area of the glass channel.

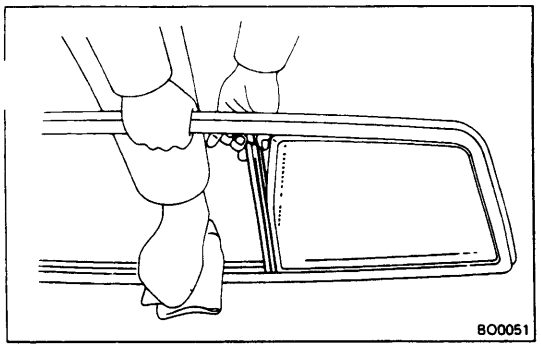

3. REMOVE NON-SLIDE GLASS

(a) Pull apart the channels and remove the two fix frames as shown.

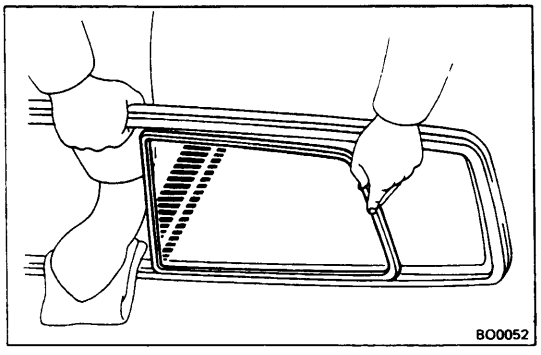

(b) Pull apart the channels and remove the two non-slide glass panes as shown.

ASSEMBLY OF BACK WINDOW ASSEMBLY

1. INSTALL NON-SLIDE GLASS

(a) Apply soapy water to the contact face of the weather-strip and to the glass channel flange.

(b) Install the two non-slide glass panes.

(c) Install the two fix frames.

2. INSTALL SLIDE GLASS

Install the two slide glass panes at the center area of the glass channel.

3. INSTALL FOLLOWING PARTS:

(a) Four screws holding the two fix frames

(b) Back window slide glass channel stopper

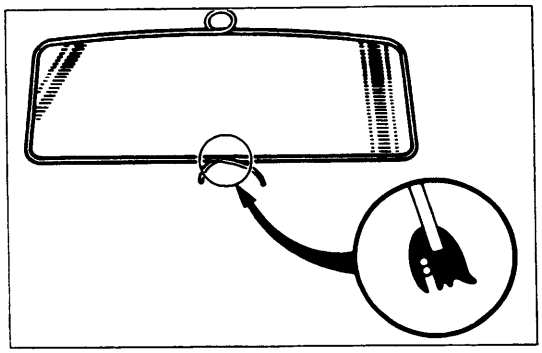

INSTALLATION OF BACK WINDOW

1. INSTALL WEATHERSTRIP ON BACK WINDOW

(a) Attach the weatherstrip to the back window.

CAUTION: If the weatherstrip has become hard, it may develop water leaks. Use a new one if possible.

(b) Apply a working cord along the weatherstrip groove as shown.

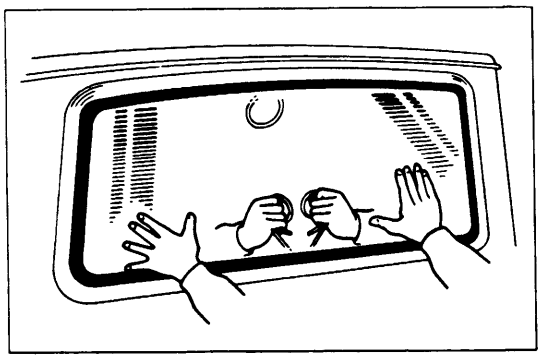

2. INSTALL BACK WINDOW

NOTE: Begin installation in the middle of the lower part of the glass.

(a) Hold the back window in position on the body.

(b) Install the back window by pulling the cord from the interior, while pushing the outside of the weatherstrip with your open hand.

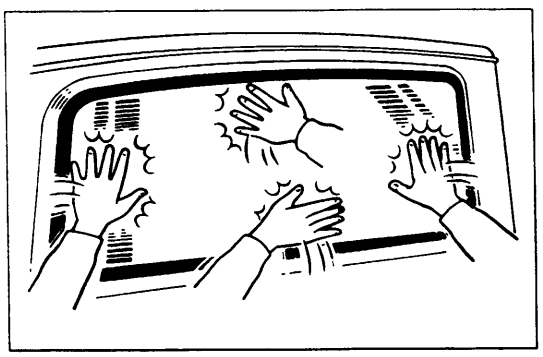

(c) To snug the back window in place, tap from the outside with your open hand.

REAR WIPER

COMPONENTS

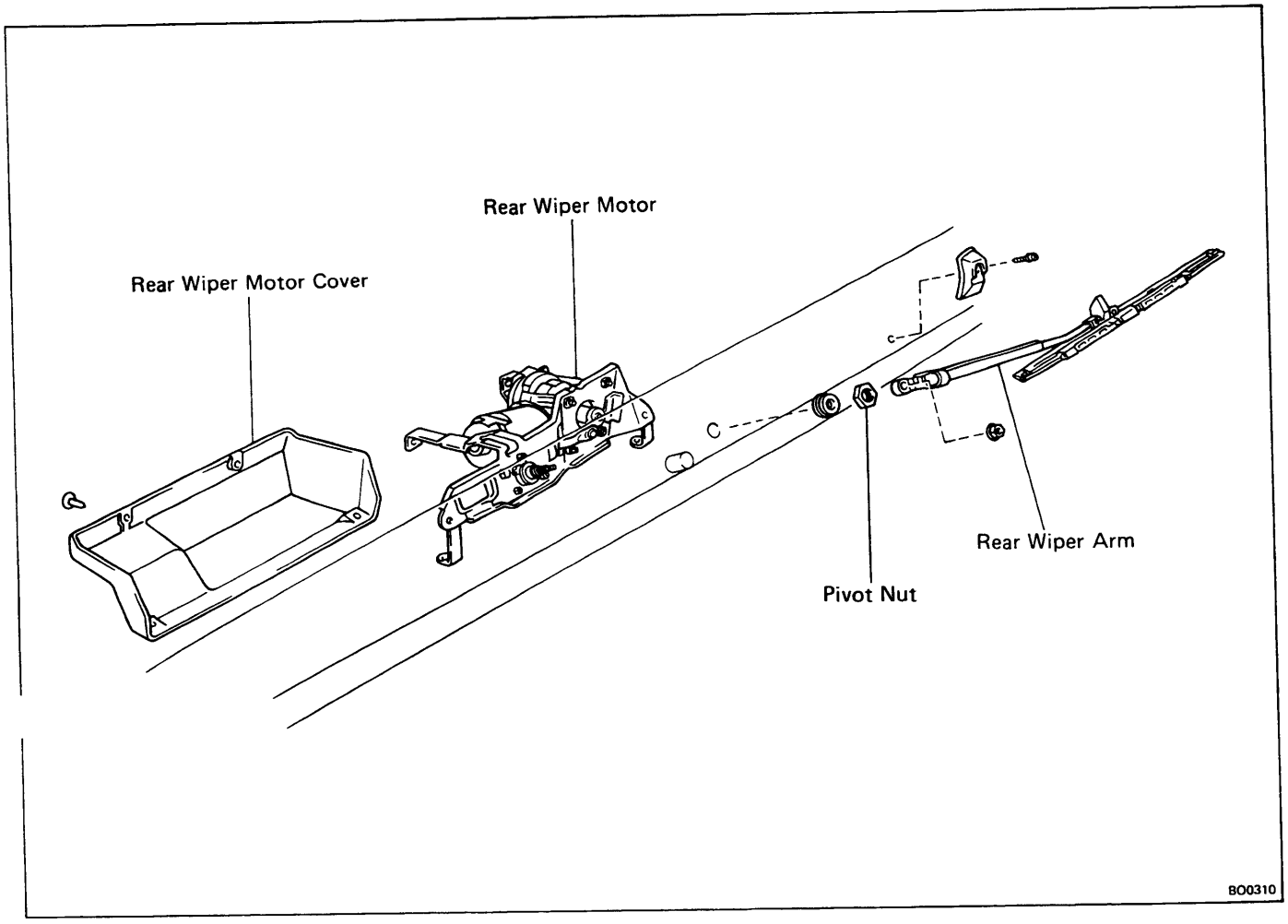

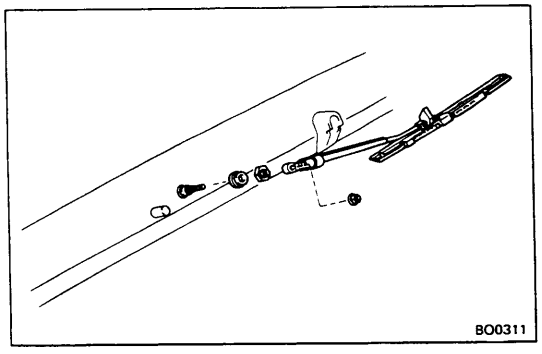

REMOVAL OF REAR WIPER

1. **REMOVE REAR WIPER ARM**
2. **REMOVE PIVOT NUT**

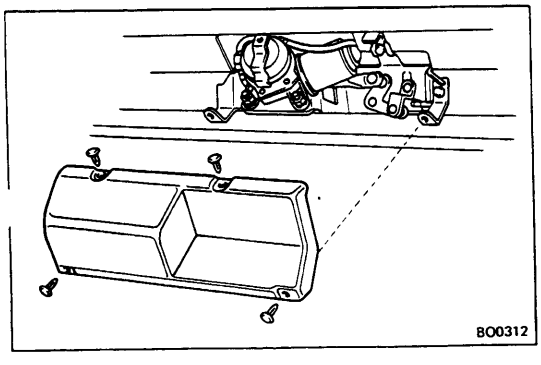

3. **REMOVE WIPER MOTOR COVER**
   Remove the four clips, and remove the cover.
4. **DISCONNECT CONNECTORS AND WASHER HOSE**
   Disconnect the two connectors and washer hose.

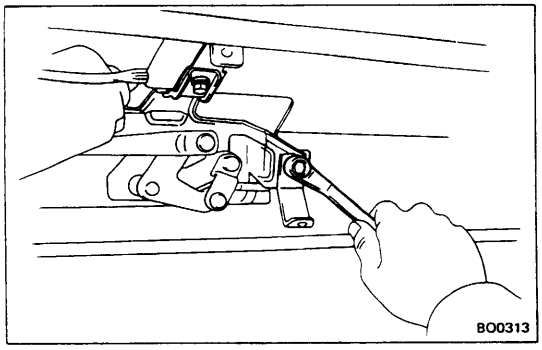

5. **REMOVE WIPER MOTOR ASSEMBLY**

   Remove the three bolts, and then remove the wiper motor assembly.

6. **REMOVE WASHER NOZZLE**

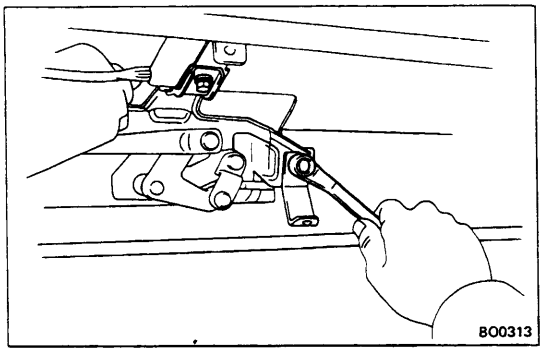

INSTALLATION OF REAR WIPER

1. **INSTALL WASHER NOZZLE**

   Torque: 15 kg-cm (13 in.-lb, 1.5 N·m)

2. **INSTALL WIPER MOTOR ASSEMBLY**

   Install the wiper motor assembly with the three mount bolts.

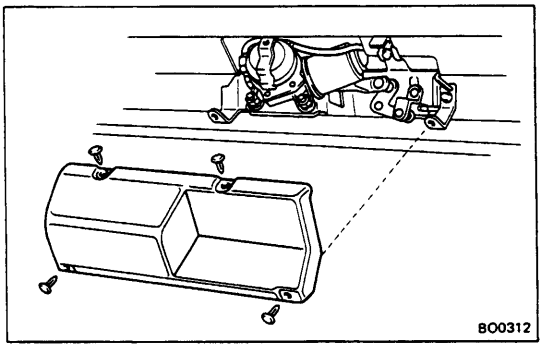

3. **CONNECT CONNECTORS AND WASHER HOSE**

   Connect the two connectors and washer hose.

4. **INSTALL WIPER MOTOR COVER**

   Install the wiper motor cover with the four clips.

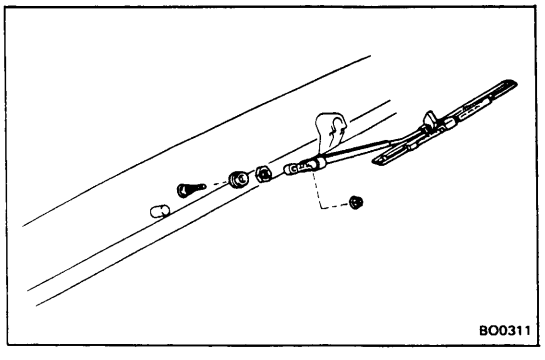

5. **INSTALL PIVOT NUT**

   Torque: 110 kg-cm (8 ft-lb, 11 N·m)

6. **INSTALL REAR WIPER ARM**

   Torque: 55 kg-cm (48 in.-lb, 5.4 N·m)

SAFETY PAD

COMPONENTS

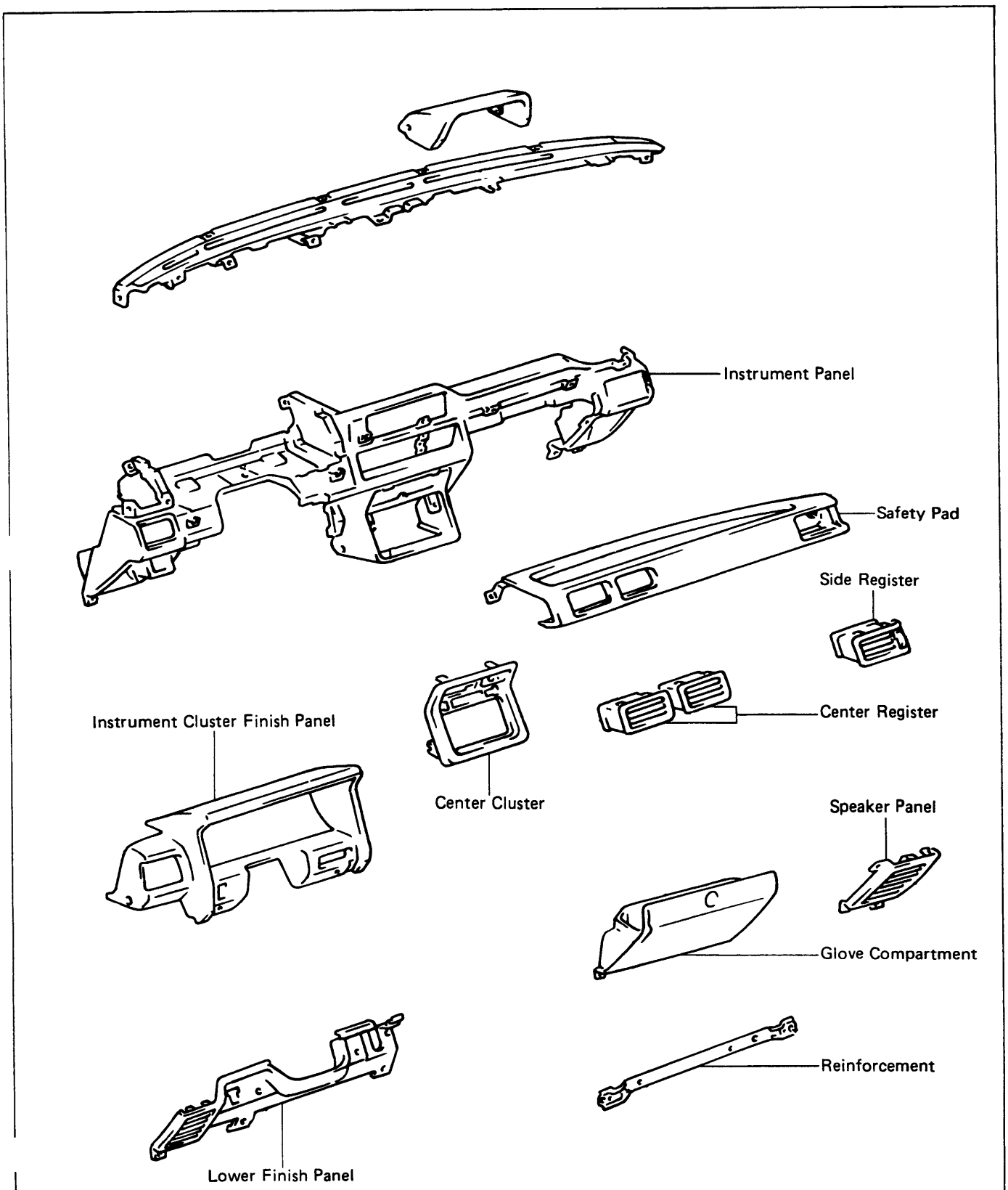

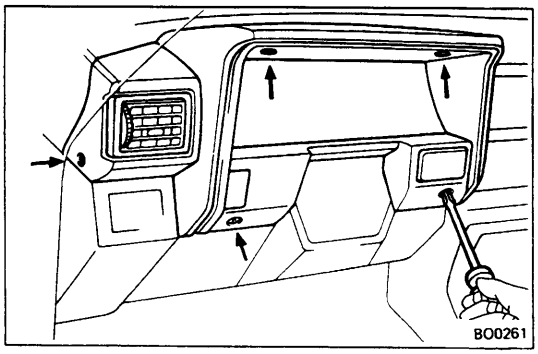

REMOVAL OF SAFETY PAD

(See page BO-43)

1. **DISCONNECT NEGATIVE CABLE FROM BATTERY**

2. **REMOVE INSTRUMENT CLUSTER FINISH PANEL**

   Remove the five screws and instrument cluster finish panel.

3. **REMOVE COMBINATION METER**

   (a) Remove the four mounting screws.

   (b) Disconnect the connectors and remove the meter.

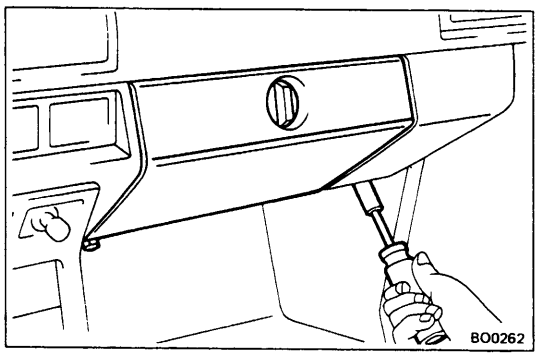

4. **REMOVE GLOVE COMPARTMENT**

   Remove the two bolts and glove compartment with the hinge.

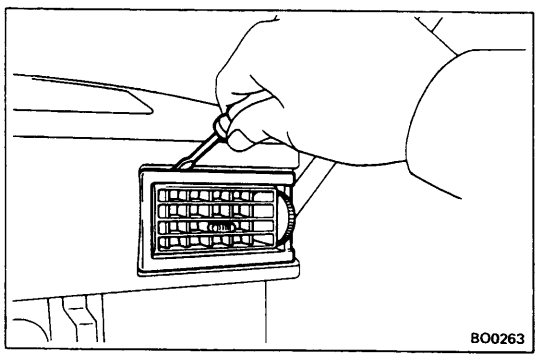

5. **REMOVE SIDE REGISTER**

   Using a screwdriver, pry between the register and safety pad.

   CAUTION: Be careful not to scratch the safety pad.

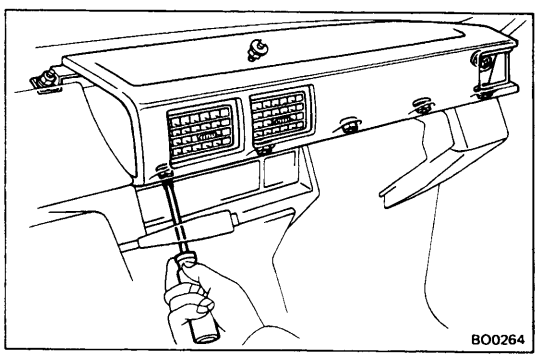

6. **REMOVE SAFETY PAD**

   (a) Remove the two nuts and six screws.

   (b) Pull out the safety pad.

INSTALLATION OF SAFETY PAD

(See page BO-43)

INSTALL SAFETY PAD IN REVERSE SEQUENCE OF REMOVAL

SEAT

COMPONENTS

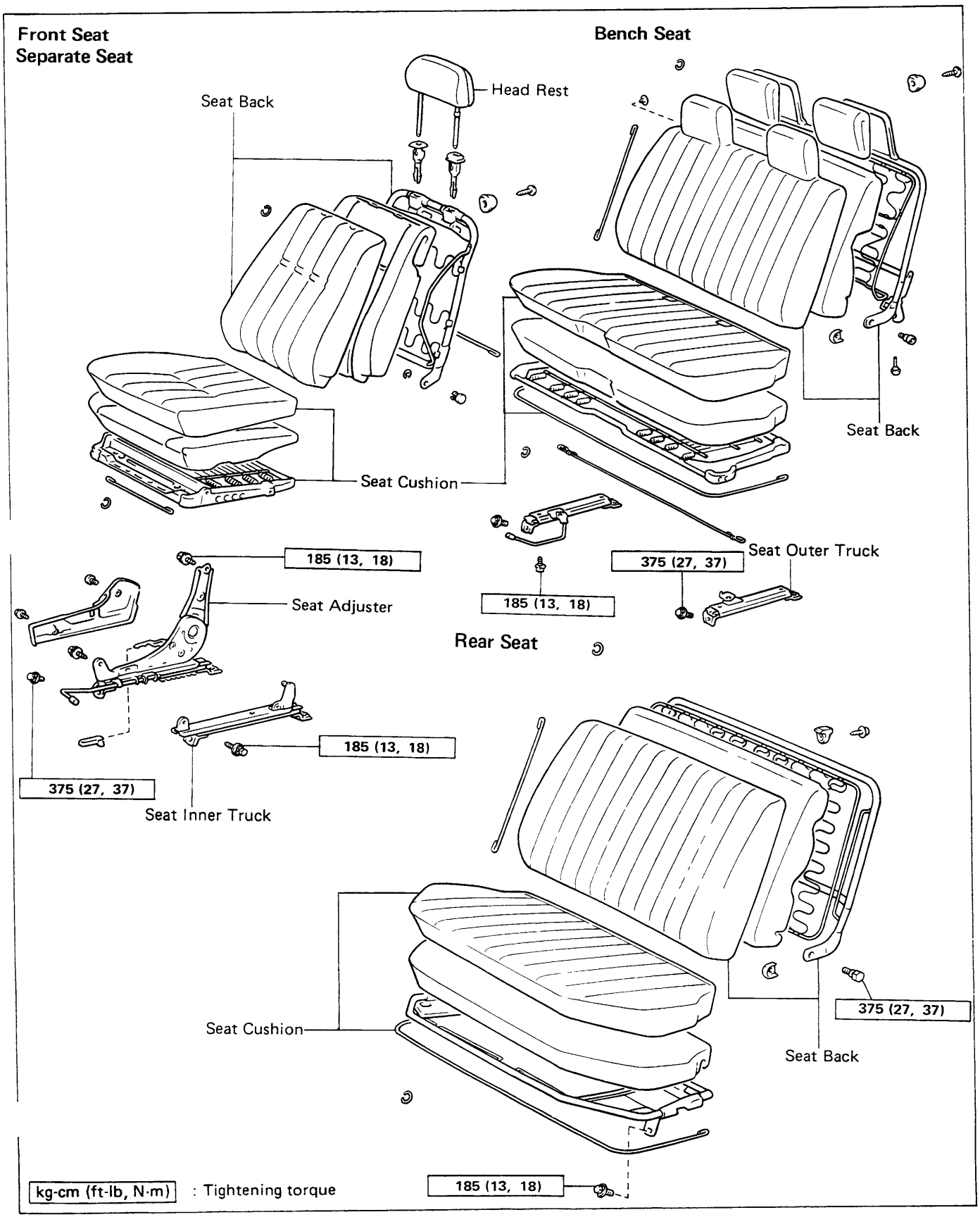

SEAT BELTS

COMPONENTS

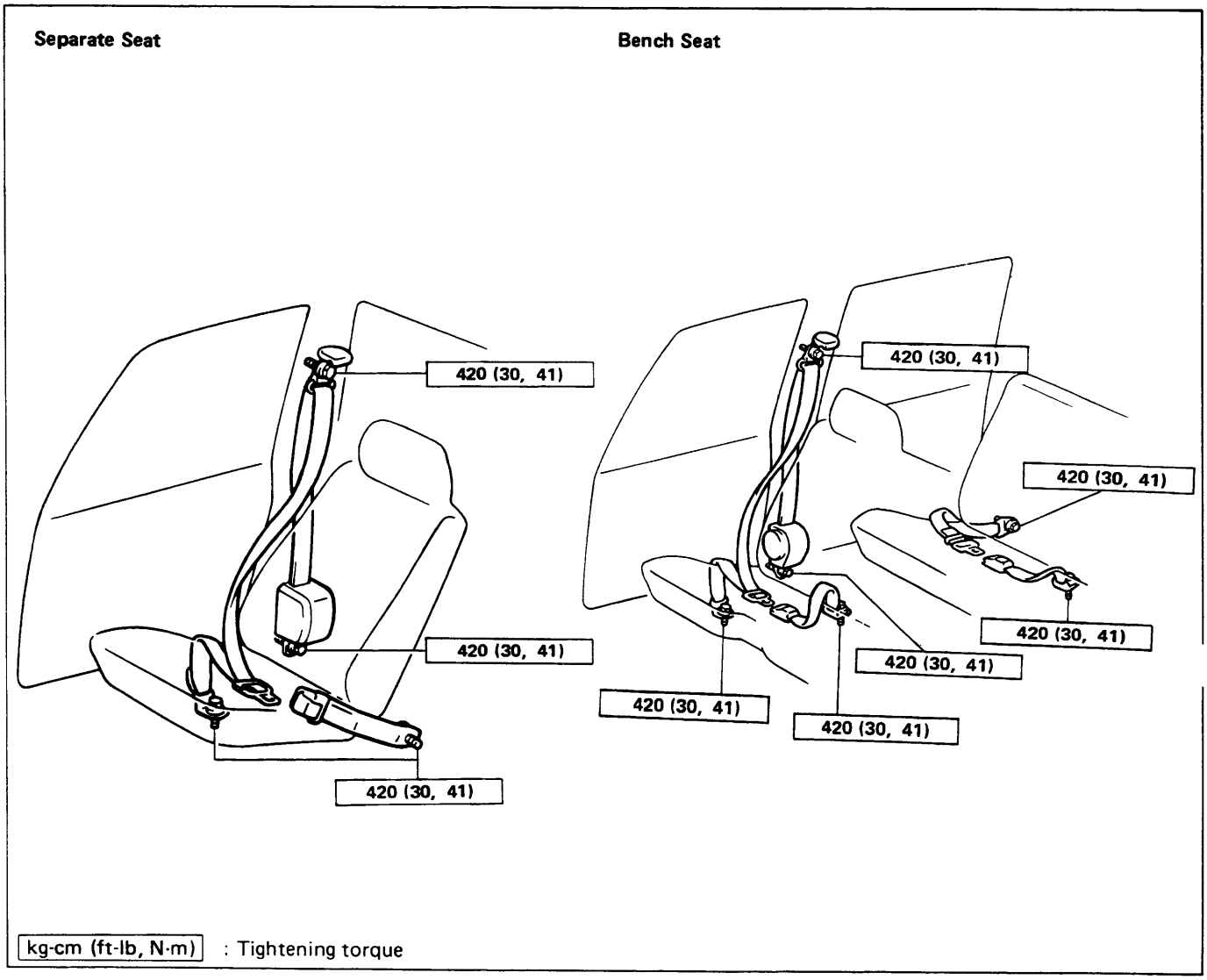

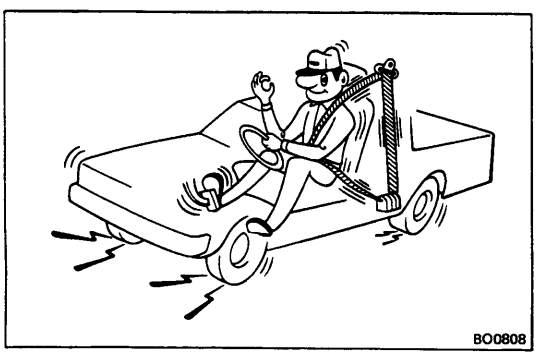

FRONT SEAT BELT
(Emergency Locking Retractor (ELR) Type)

1. RUNNING TEST (IN SAFE AREA)

(a) Fasten the front seat belt.

(b) Drive the car at 10 mph (16 km/h) and make a very hard stop.

(c) Check that the belt is locked and cannot be extended at this time.

NOTE: Conduct this test in a safe area. If the belt do not lock, remove the belt mechanism assembly and conduct the following static check. Also, whenever installing a new belt assembly, verify the proper operation before installation.

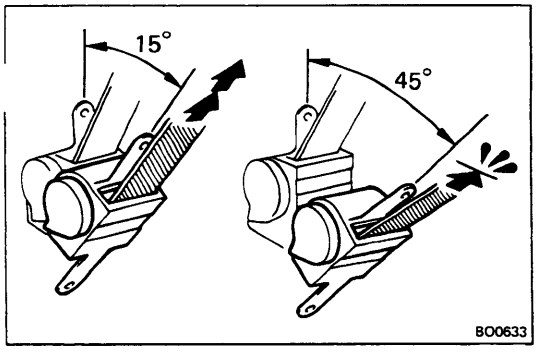

2. STATIC TEST

(a) Remove the locking retractor assembly.

(b) Tilt the retractor slowly.

(c) Verify that the belt can be pulled out at a tilt of 15 degrees or less, and cannot be pulled out at over 45 degrees of tilt.

If a problem is found, replace the assembly.

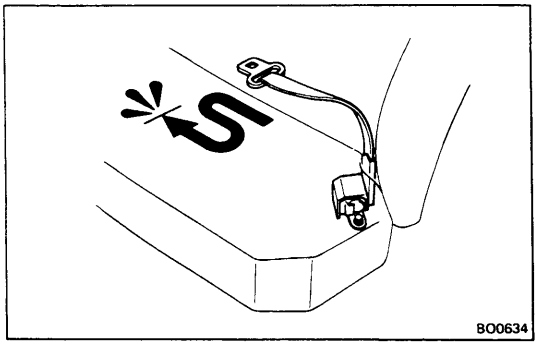

OUTBOARD REAR SEAT BELT (Automatic Locking Retractor (ALR) Type)

TESTING

(a) Pull out the belt, release it slightly and then pull it out again.

(b) Verify that the belt cannot be extended further.

If a problem is found, replace the assembly.

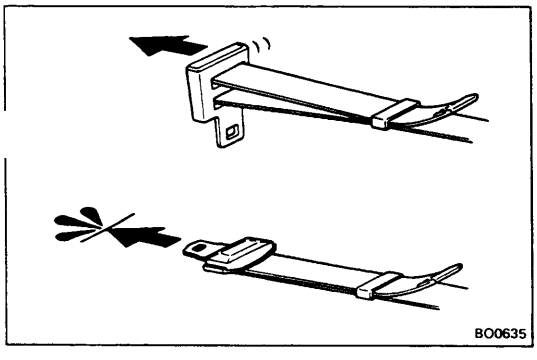

CENTER REAR SEAT BELT (Manual Type)

TESTING

(a) Adjust the belt to the proper length.

(b) Apply a firm load to the belt.

(c) Verify that the belt does not extend.

ONE-TOUCH TAIL GATE

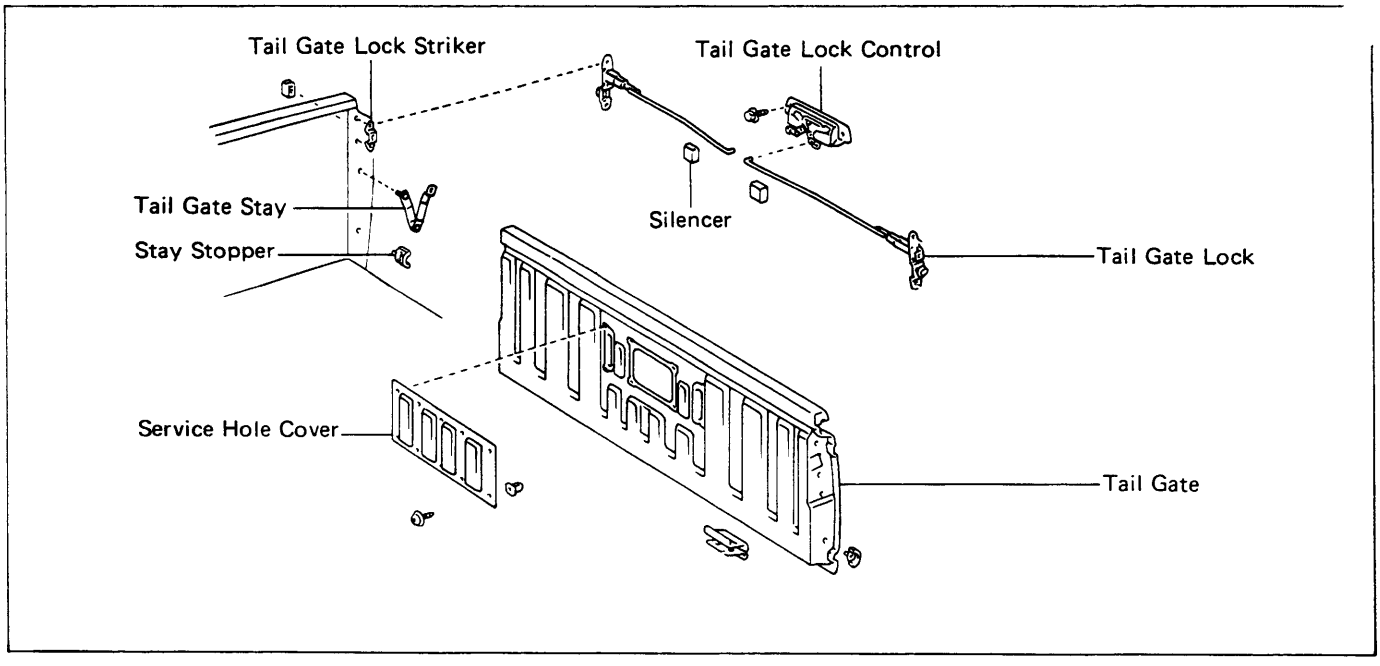

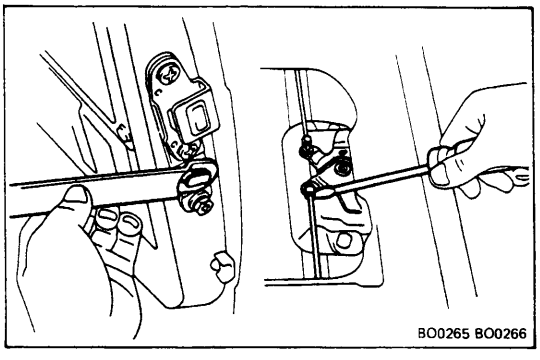

REMOVAL OF TAIL GATE LOCK

1. **DISCONNECT TAIL GATE STAY FROM TAIL GATE LOCK**
2. **REMOVE SERVICE HOLE COVER**
3. **DISCONNECT TAIL GATE LOCK LINK FROM TAIL GATE LOCK CONTROL**

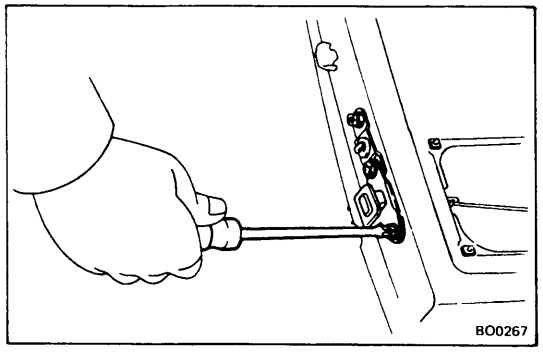

4. **REMOVE TAIL GATE LOCK FROM TAIL GATE**
   Remove the three set screws and the tail gate lock.

INSTALLATION OF TAIL GATE LOCK

1. **INSTALL TAIL GATE LOCK TO TAIL GATE**
   Install the tail gate lock with the three screws.

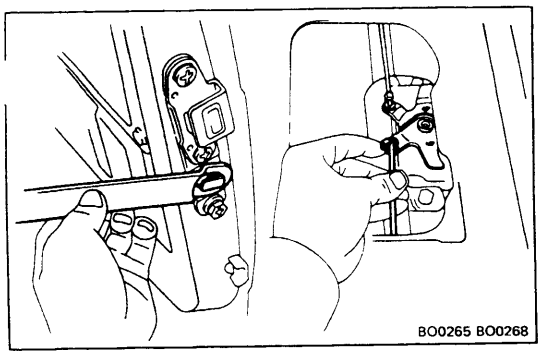

2. **CONNECT TAIL GATE STAY TO TAIL GATE LOCK**
3. **CONNECT TAIL GATE LOCK LINK TO TAIL GATE LOCK CONTROL**
4. **INSTALL SERVICE HOLE COVER**

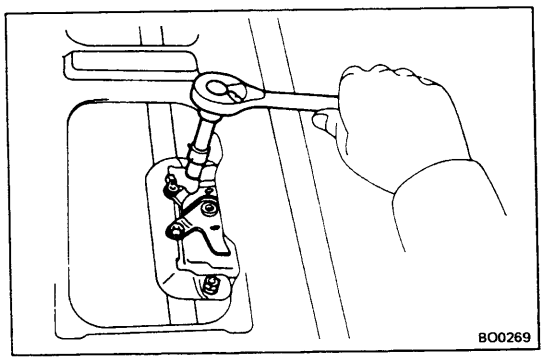

REMOVAL OF TAIL GATE LOCK CONTROL

1. **REMOVE SERVICE HOLE COVER**
2. **DISCONNECT TWO TAIL GATE LOCK LINKS**
3. **REMOVE TAIL GATE LOCK CONTROL**

INSTALLATION OF TAIL GATE LOCK CONTROL

INSTALL TAIL GATE LOCK CONTROL IN REVERSE ORDER OF REMOVAL

ROLL-OVER BAR

COMPONENTS

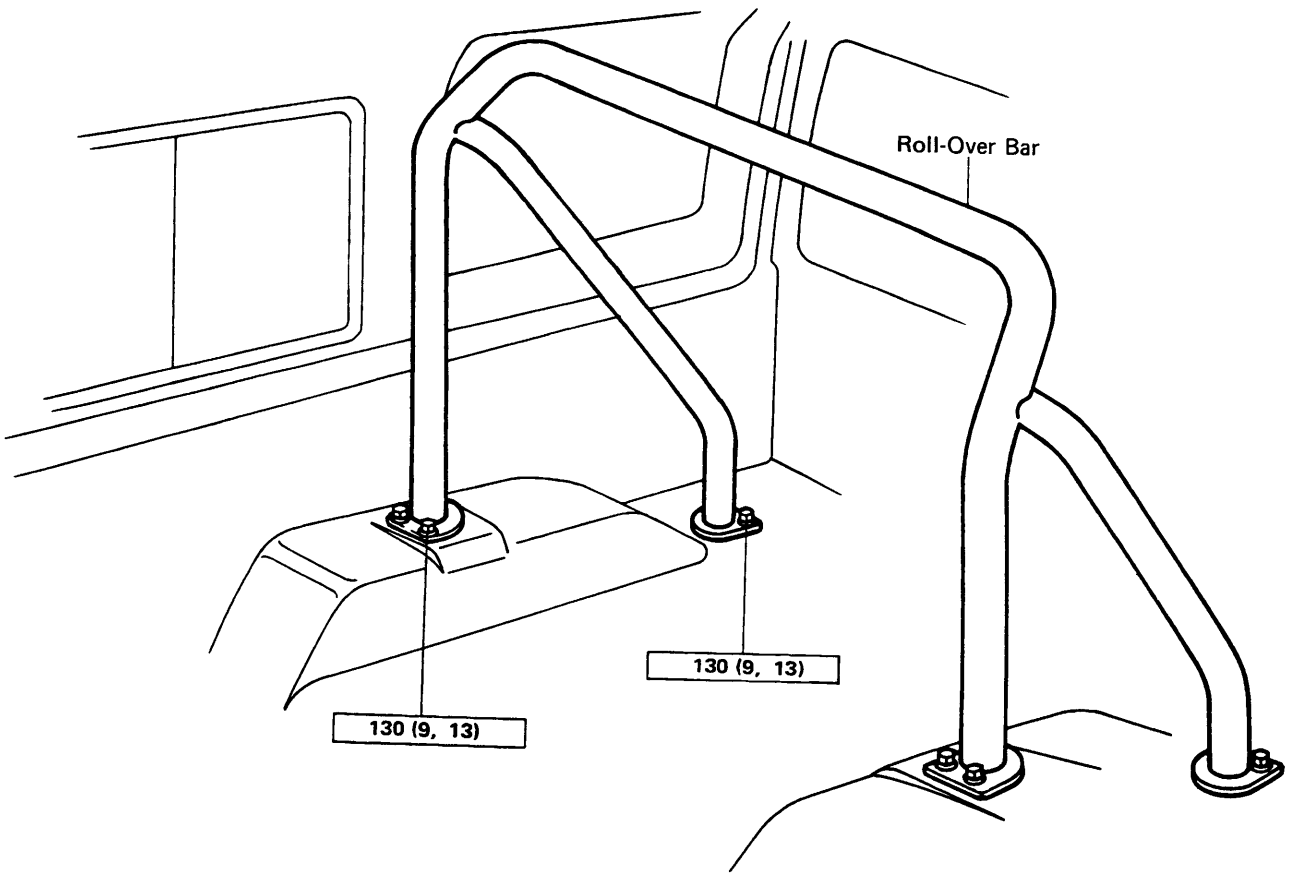

kg-cm (ft-lb, N·m) : Tightening torque

BO0809

BODY DIMENSIONS (2WD)

Conversion table			
mm	in.	mm	in.
50	1.97	1,100	43.31
85	3.35	1,108	43.62
100	3.94	1,176	46.30
110.1	4.33	1,217	47.91
116	4.57	1,367	53.82
119.1	4.69	1,527	60.12
129.8	5.11	1,654	65.12
139.6	5.50	1,778	70.00
148	5.83	1,879.5	74.00
148.6	5.85	2,615	102.95
173	6.81	2,850	112.20
175	6.89	4,123	162.32
200	7.87	4,358	171.57
220	8.66		
254	10.00		
258	10.16		
272	10.71		
370	14.57		
480	18.90		
497	19.57		
525	20.67		
530	20.87		
542	21.34		
575	22.64		
611.5	24.07		
620	24.41		
640	25.20		
700	27.56		
749	29.49		
752	29.61		
768.2	30.24		
819.9	32.28		
840	33.07		
844.1	33.23		
888	34.96		
904	35.59		
938.5	36.95		
1,000	39.37		
1,050	41.34		

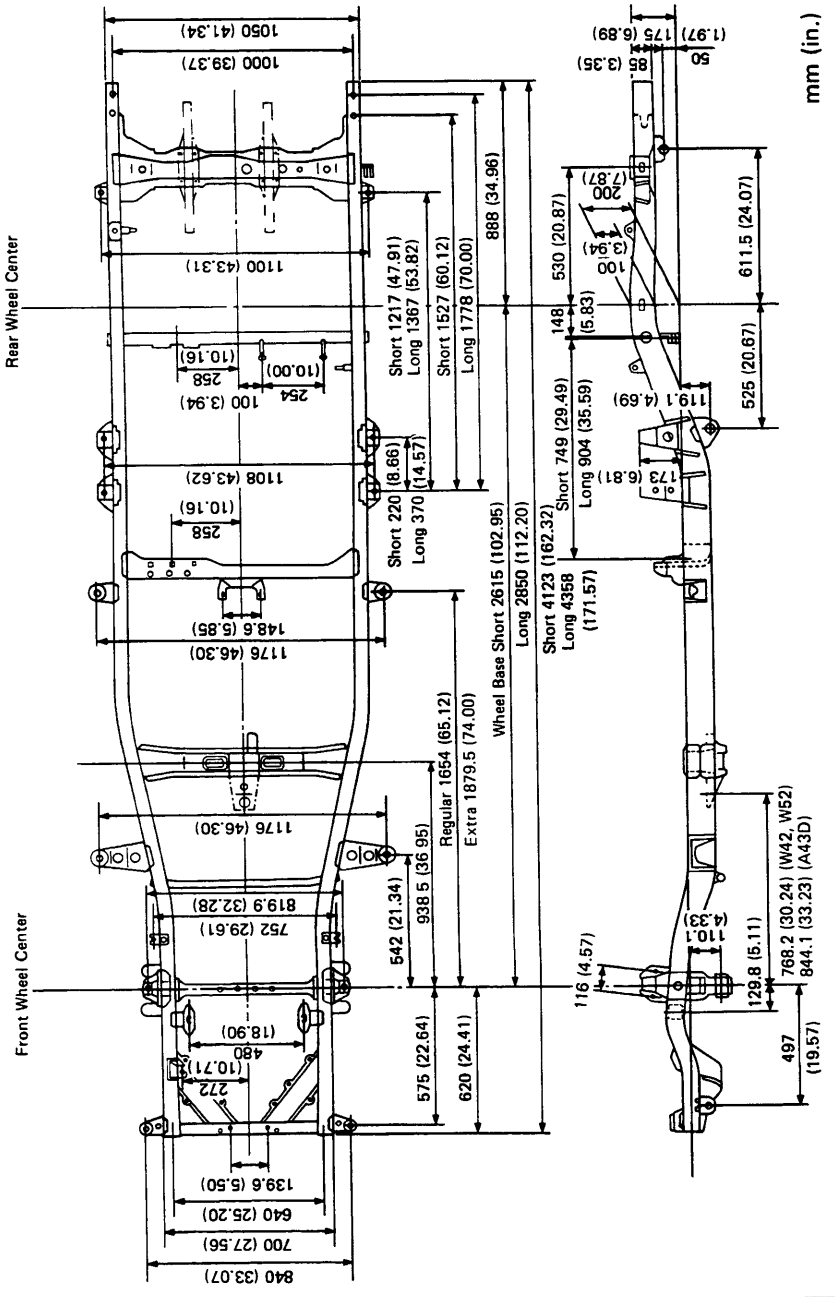

RN50 series	SHORT WHEEL BASE
RN55 series	LONG WHEEL BASE

BODY DIMENSIONS (4WD)

Conversion table					
mm	in.	mm	in.	mm	in.
13.8	0.54	575	22.64		
37	1.46	611.5	24.07		
40	1.57	615	24.21		
54	2.13	620	24.41		
56.6	2.23	640	25.20		
70	2.76	700	27.56		
70.1	2.76	740	29.13		
73.1	2.88	747	29.41		
75	2.95	780	30.71		
80	3.15	840	33.07		
85	3.35	848	33.39		
115	4.53	864	34.02		
119.2	4.69	888	34.96		
136	5.35	904	35.59		
139.5	5.49	910.8	35.86		
148	5.83	930	36.61		
173	6.81	1,000	39.37		
175	6.89	1,050	41.34		
212.5	8.37	1,068	42.05		
220	8.66	1,100	43.31		
225.5	8.88	1,108	43.62		
230	9.06	1,176	46.30		
234	9.21	1,654	65.12		
237	9.33	2,615	102.95		
258	10.16	2,850	112.20		
277	10.91	4,123	162.32		
300	11.81	4,358	171.57		
310	12.20				
314.5	12.38				
316	12.44				
437	17.20				
480	18.90				
500	19.69				
525	20.67				
530	20.87				
542	21.34				
545	21.46				
560	22.05				
570	22.44				

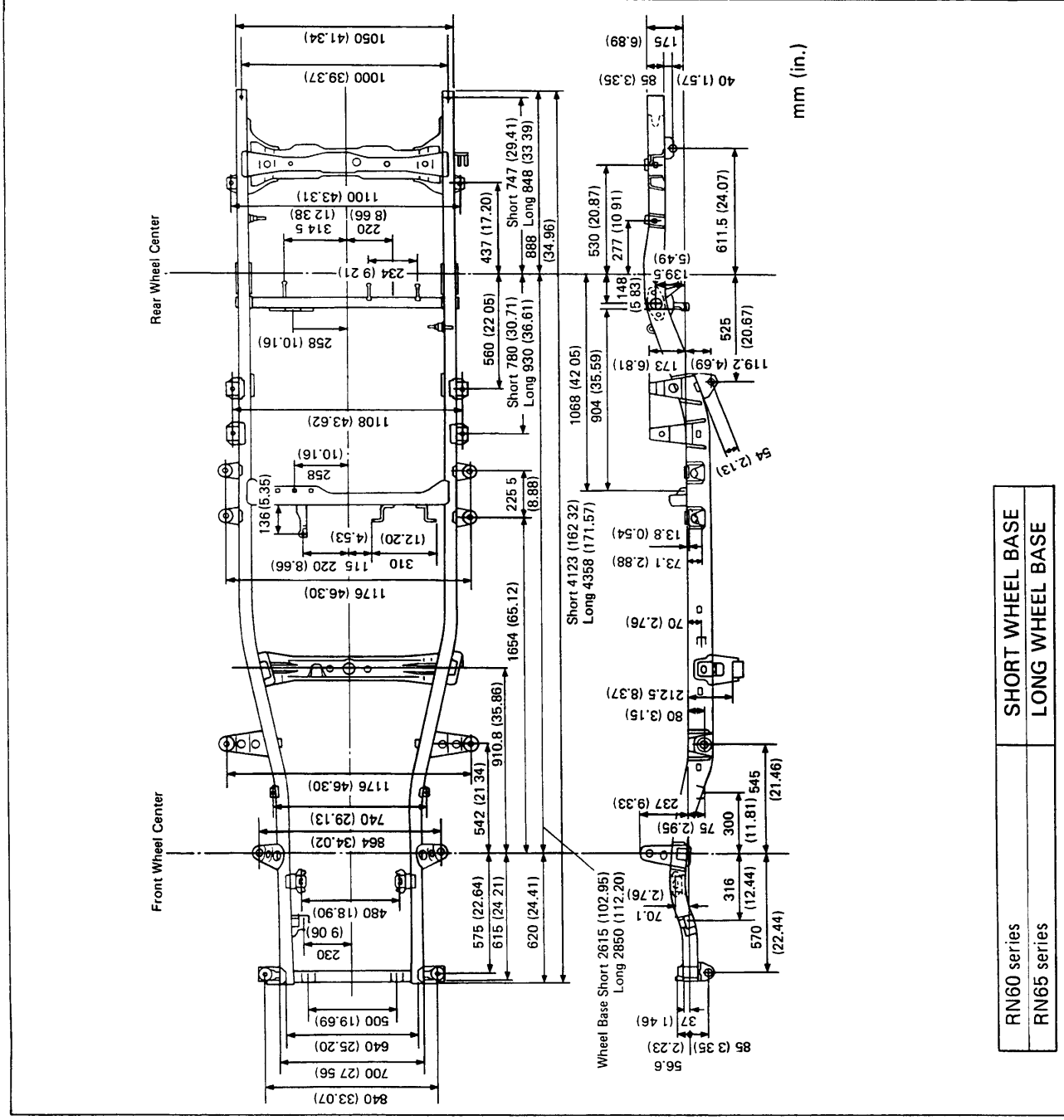

WINCH

	Page
TROUBLESHOOTING	WI-2
ON-VEHICLE INSPECTION	WI-3
WINCH	WI-7
MOTOR	WI-14
SUB-MAGNET SWITCH	WI-20
BRACKET	WI-23

TROUBLESHOOTING

Problem	Possible cause	Remedy	Page
Winch does not operate	Wiper fuse blown	Replace fuse and check for short	
	Main magnet switch faulty	Check main magnet switch	WI-3
	Remote control switch faulty	Repair or replace remote control switch	WI-4
	Winch gear damaged	Replace winch gear	WI-9
No side clockwise or counter clockwise operation	Sub-magnet switch fautly	Check sub-magnet switch	WI-3
	Remote control switch faulty	Replace remote control switch	WI-4
No self lock operation	Worn out clutch disc facing	Replace clutch outer disc	WI-9
	One-way clutch faulty	Replace one-way clutch	WI-9
Oil leak from winch drum	Oil seal damaged or worn	Replace oil seal	WI-9,18

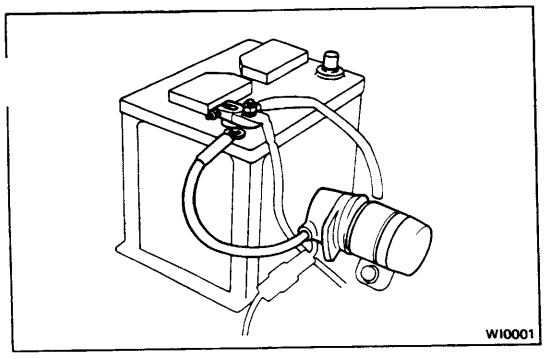

ON-VEHICLE INSPECTION

INSPECTION OF WINCH

1. **DISCONNECT BATTERY CABLE FROM NEGATIVE TERMINAL**

2. **DISCONNECT MAIN MAGNET SWITCH CABLE FROM BATTERY POSITIVE TERMINAL**

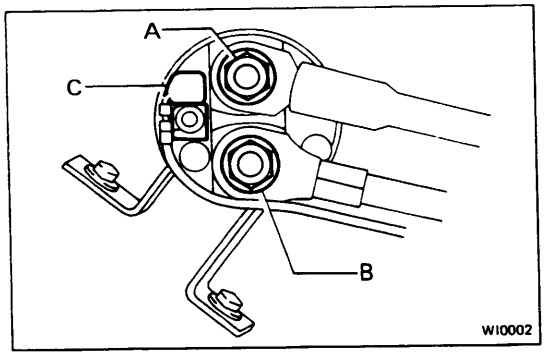

3. **CONNECT NEGATIVE CABLE TO BATTERY TERMINAL**

4. **CHECK MAIN MAGNET SWITCH**

Using an ohmmeter and voltmeter check that the main magnet switch operation with the remote control switch connector connected.

C terminal: Battery voltage

Terminals A and B: continuity

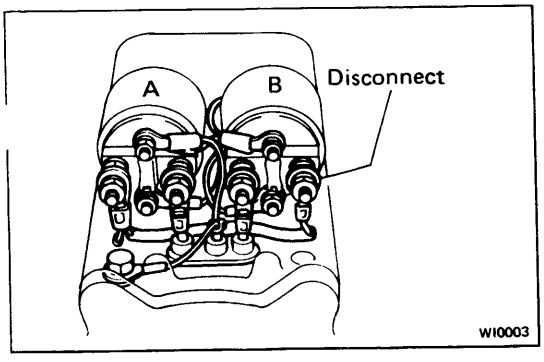

5. **CHECK SUB-MAGNET SWITCH**

(a) Remove the connector cover.

(b) Remove the sub-magnet switch cover.

(c) Disconnect the positive wire lead from terminal B of the sub-magnet switch B.

(d) Using an ohmmeter and voltmeter check the sub-magnet switch operation.

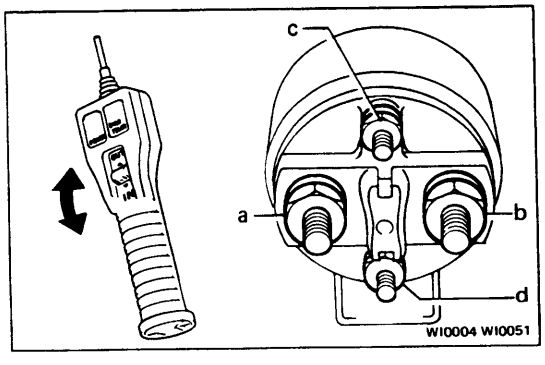

- Check operation of sub-magnet switch A and B, with the remote control switch in the NEUTRAL position.

Terminal d: No voltage
Terminals a and b: No continuity

- Check operation of sub-magnet switch A, with the remote control switch in the IN position.

Terminal d: Battery voltage

Terminals a and b: Continuity

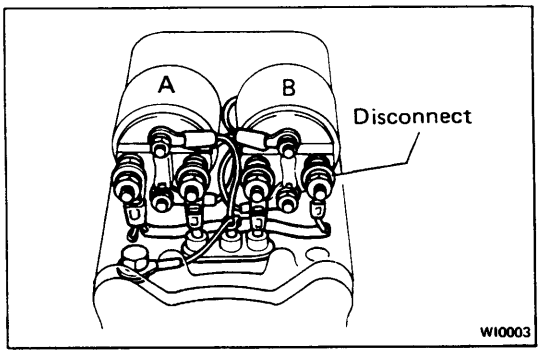

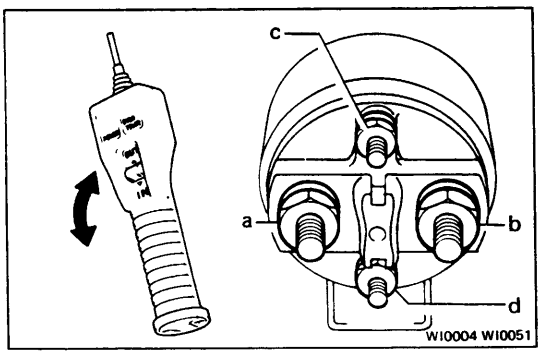

- Check operation of sub-magnet switch B, with the remote control switch in the OUT position.

Terminal d: Battery voltage

Terminals a and b: Continuity

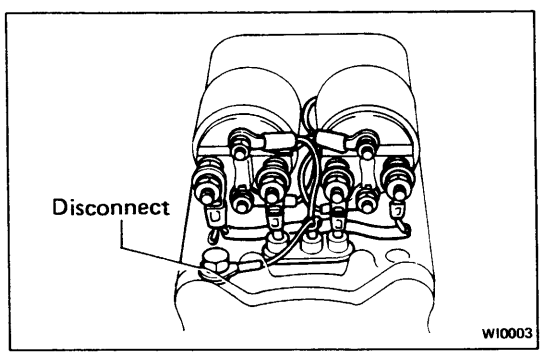

REMOTE CONTROL SWITCH

1. CHECK INDICATOR LIGHT AND BUZZER

(a) The power indicator light will light when the remo' control switch connector is connected.

(b) The overheat temperature indicator light will light and the buzzer come on when the thermo switch lead wire is disconnected.

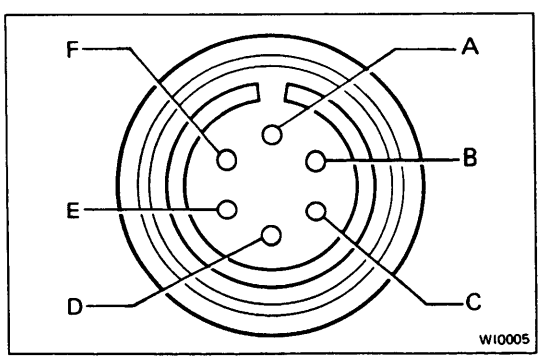

2. CHECK CONNECTOR TERMINAL

Using an ohmmeter, check for continuity.

(a) Check for continuity between B and C.

(b) Check for continuity between B and E.

(c) Check for continuity between B and D with the remote control switch in the IN position.

(d) Check for continuity between B and F with the remote control switch in the OUT position.

If there is no continuity, replace the remote control switch.

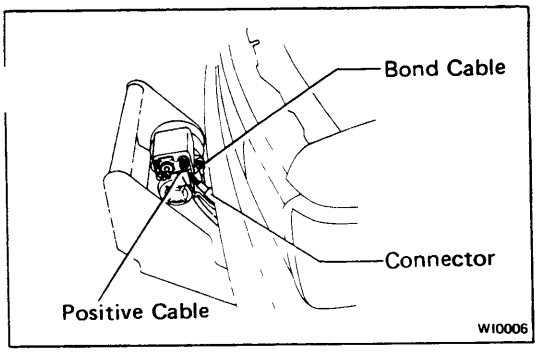

REMOVAL OF WINCH ASSEMBLY

1. **DISCONNECT BATTERY CABLE FROM NEGATIVE TERMINAL**

2. **DISCONNECT FOLLOWING WIRE HARNESS:**
   - Positive cable from the winch
   - Bond cable from the winch
   - Two terminal connectors

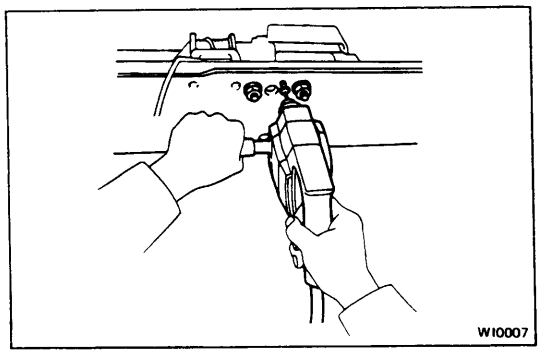

3. **REMOVE ANTI-THEFT BOLT**
   (a) Using a centering punch, mark the center of the winch anti-theft bolt.
   (b) Using a 3 - 4 mm (0.12 - 0.16 in.) drill, drill a hole into the winch anti-theft bolt.

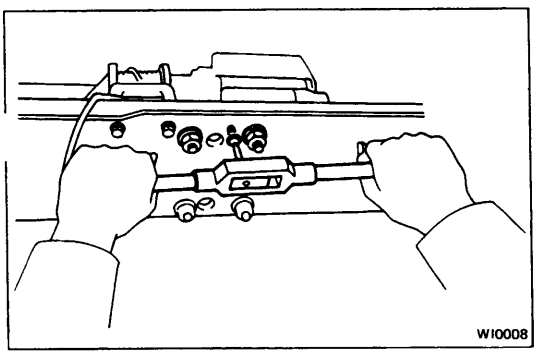

   (c) Using a screw extractor, remove the winch anti-theft bolt.

4. **REMOVE WINCH ASSEMBLY**
   (a) Remove the two bolts, then remove the wire guide.
   (b) Remove the four bolts and nuts, then remove the winch assembly from the bracket.

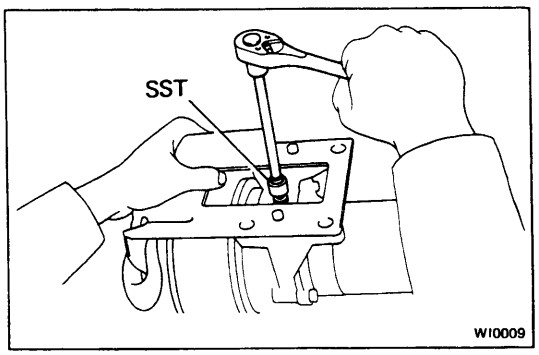

5. **DRAIN FLUID**
   Remove drain plug and drain fluid.
   SST 09313-30021

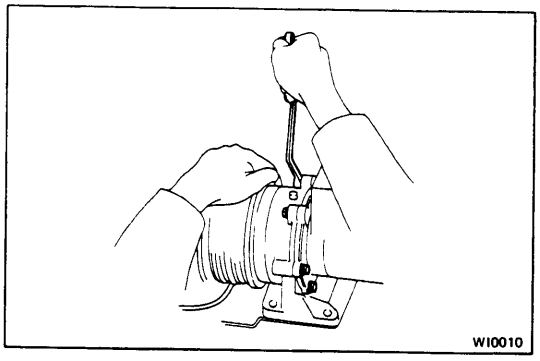

SEPARATE WINCH GEAR, MOTOR AND CONTROL UNIT

1. SEPARATE WINCH GEAR AND MOTOR

Remove the six bolts, and separate the winch gear case and winch motor with control unit.

2. REMOVE CONNECTOR COVER

3. REMOVE SUB-MAGNET SWITCH COVER

4. DISCONNECT FOLLOWING WIRE HARNESS:

(a) Motor lead wire from the sub-magnet switch

(b) Thermistor switch lead wire from the sub-magnet switch

5. REMOVE BASE FROM MOTOR

Remove the four bolts and two terminals. Then remove the base with the sub-magnet switches from the motor.

WINCH

COMPONENTS

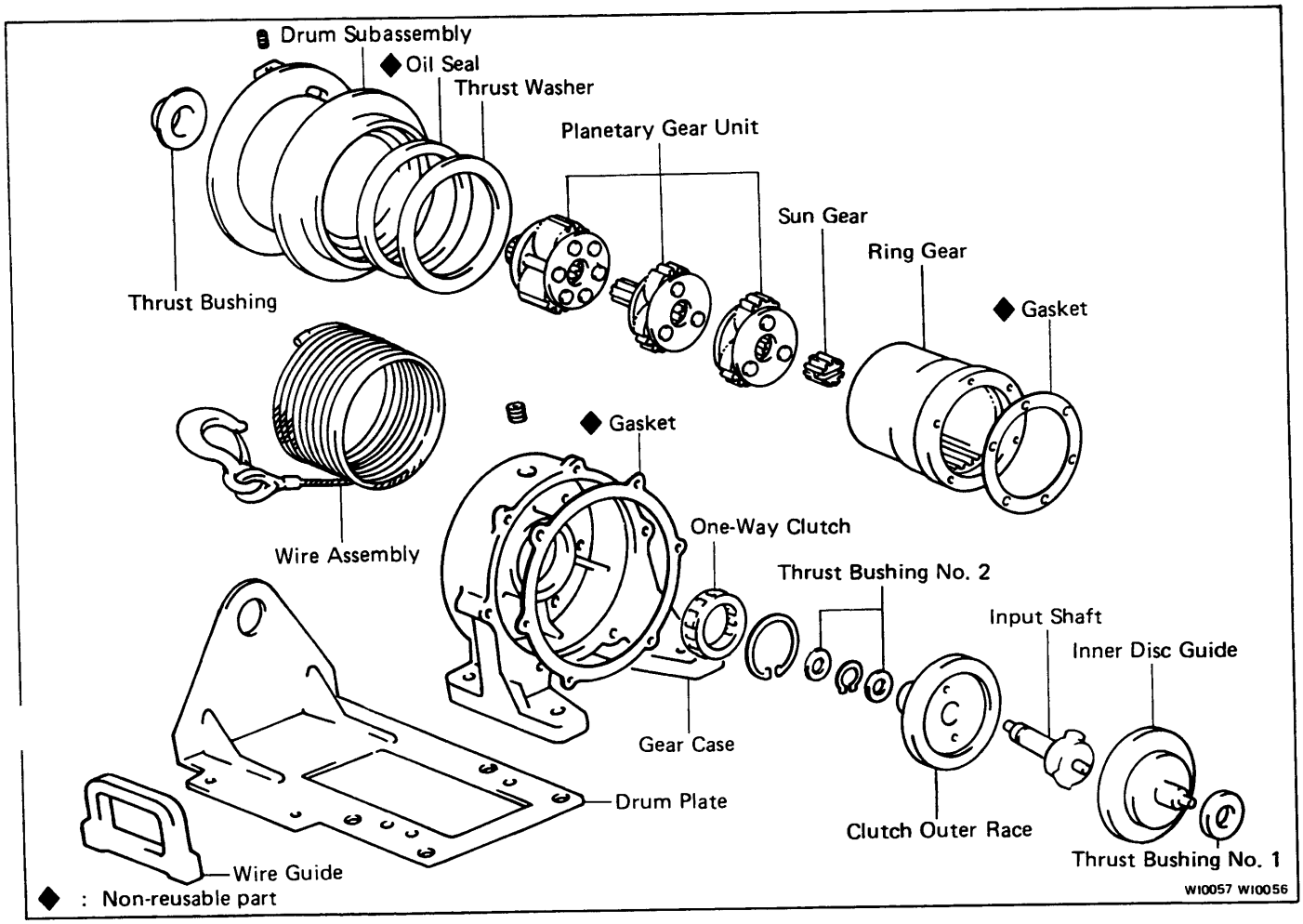

DISASSEMBLY OF WINCH

1. **REMOVE THRUST BUSHING NO.1**
2. **REMOVE CLUTCH OUTER RACE ASSEMBLY WITH INNER DISC GUIDE**
3. **REMOVE THRUST BUSHING NO.2**
4. **REMOVE INNER DISC GUIDE FROM CLUTCH OUTER RACE ASSEMBLY**

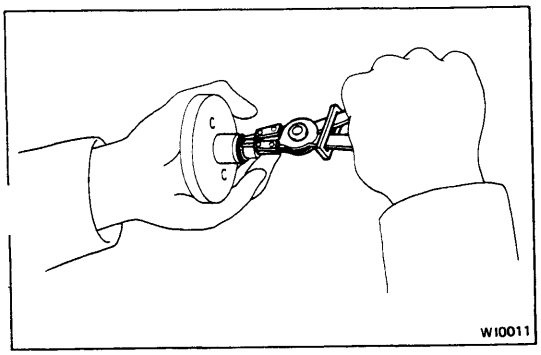

5. **REMOVE THRUST BUSHING NO.2 AND INPUT SHAFT FROM CLUTCH OUTER RACE**
   (a) Using snap ring pliers, remove the snap ring.
   (b) Remove thrust bushing No. 2 and the input shaft from the outer race.

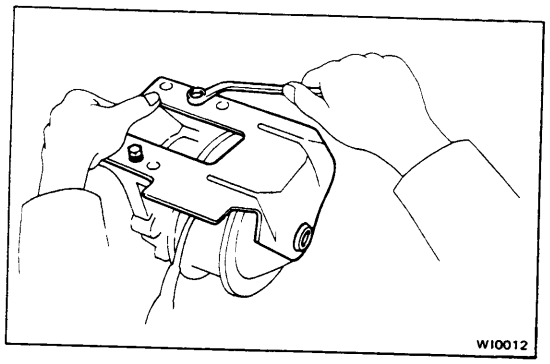

6. REMOVE WINCH DRUM PLATE AND WINCH DRUM

(a) Remove the two bolts. Then remove the winch drum plate and the thrust bushing.

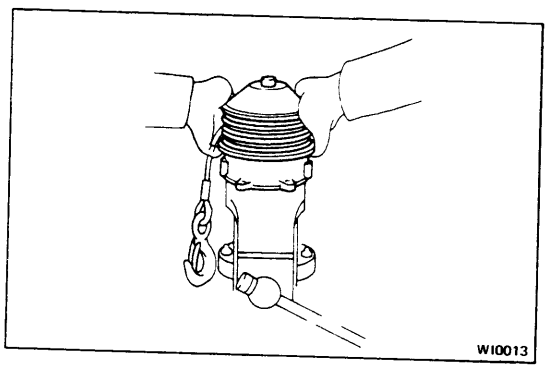

(b) Clamp the winch gear case in a vise.

NOTE: Use a set of soft jaws in the vise to protect the winch gear case.

(c) Remove the winch drum.

NOTE: Be careful not to drop the planetary gear unit.

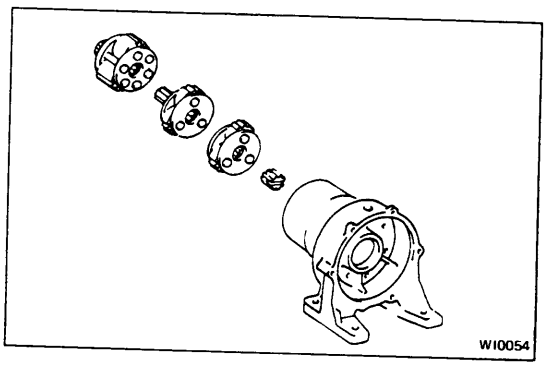

7. REMOVE PLANETARY GEAR UNIT NO. 3, NO. 2, NO. 1 AND SUN GEAR

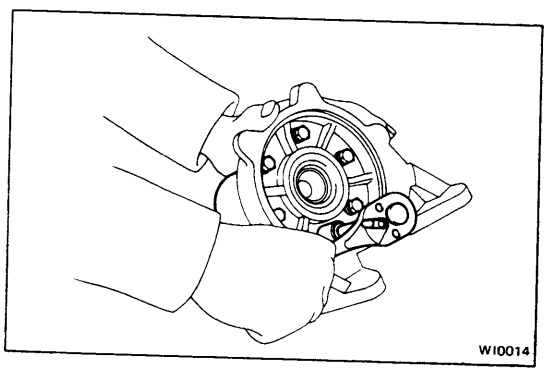

8. REMOVE RING GEAR

INSPECTION AND REPAIR OF WINCH

1. INSPECTION OF CLUTCH OUTER RACE FACING

(a) Do not peel off the facing.

(b) Confirm that the facing extends over the entire surface.

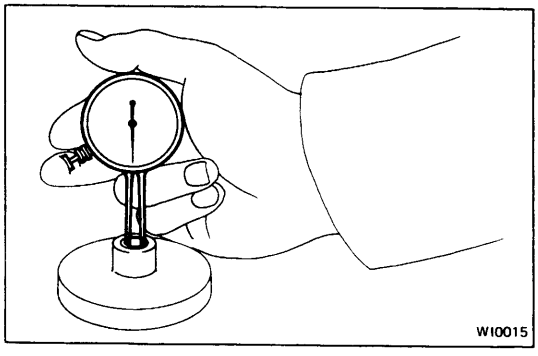

2. INSPECT CLUTCH OUTER RACE BUSHING

Using a dial indicator, measure the bushing bore.

Standard bore: 12.00 mm (0.4724 in.)
Maximum bore: 12.15 mm (0.4783 in.)

If the bushing bore is less than maximum, replace the clutch outer race subassembly.

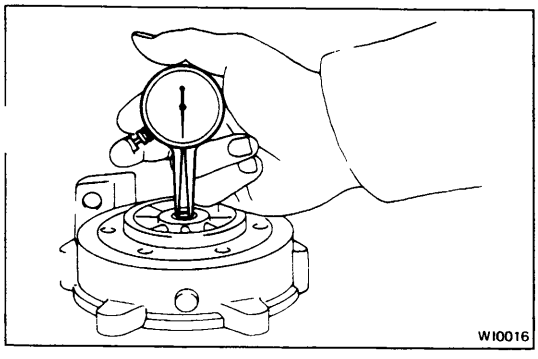

3. INSPECT WINCH GEAR CASE BUSHING

Using a dial indicator, measure the bushing bore.

Standard bore: 12.00 mm (0.4724 in.)
Maximum bore: 12.15 mm (0.4783 in.)

If the bushing bore is less than maximum, replace the gear case assembly.

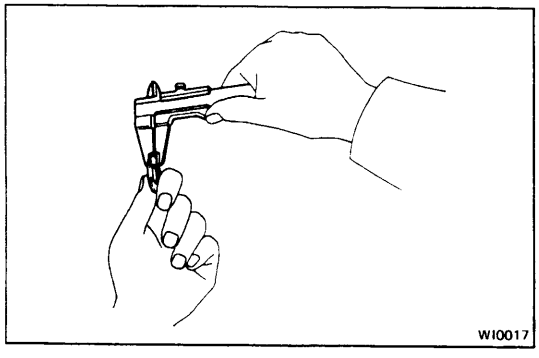

4. INSPECT THICKNESS OF THRUST BUSHING NO.1 AND NO.2

Using calipers, measure the thrust bushing thickness.

Standard thickness:	**No.1 2.0 mm (0.079 in.)**
Standard thickness:	**No.2 1.0 mm (0.039 in.)**
Minimum thickness:	**No.1 1.7 mm (0.067 in.)**
Minimum thickness:	**No.2 0.8 mm (0.031 in.)**

If the bushing thickness is less than minimum, replace the bushing.

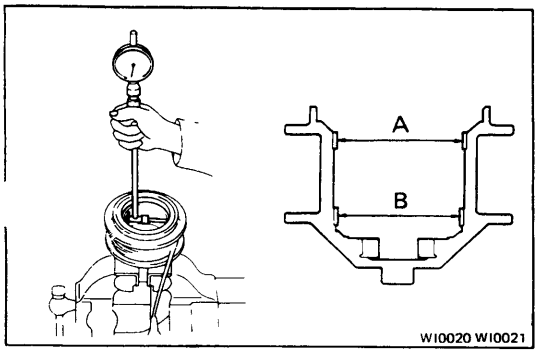

5. INSPECT WINCH DRUM BUSHING

Using a dial indicator, measure the bushing bore.

Standard bore:	**A 83.00 mm (3.2677 in.)**
	B 80.00 mm (3.1496 in.)
Maximum bore:	**A 83.08 mm (3.2709 in.)**
	B 80.08 mm (3.1527 in.)

If the bushing bore is less than maximum, replace the drum subassembly.

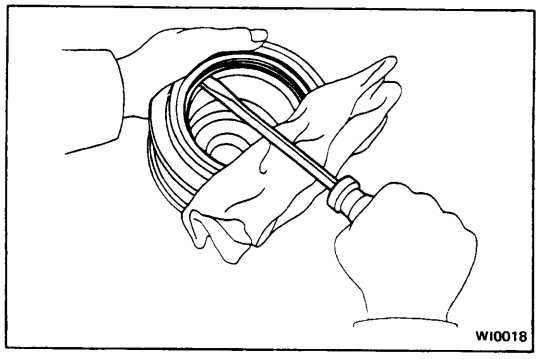

6. INSPECT WINCH DRUM OIL SEAL

(a) Check for damage.

(b) Check the oil seal lip for wear or damage.

7. IF NECESSARY, REPLACE OIL SEAL

(a) Using a screwdriver, pry out the oil seal.

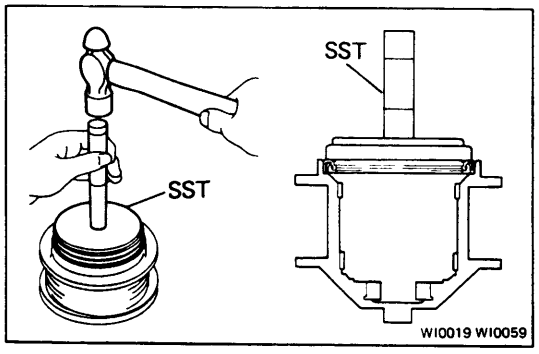

(b) Using SST and a hammer, drive in a new winch drum oil seal to the winch drum as shown.

SST 09218-56030

Oil seal drive in depth: 0 — 1.0 mm (0 — 0.039 in.)

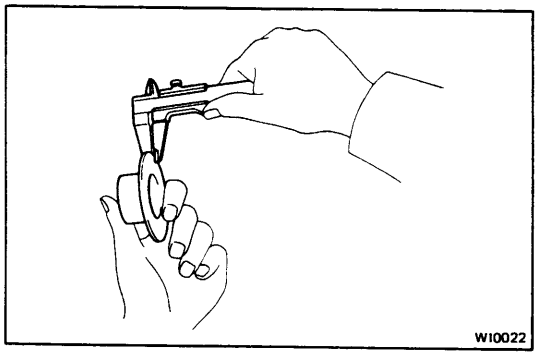

8. INSPECT WINCH DRUM THRUST BUSHING

Using calipers, measure the thrust bushing thickness.

Standard thickness: 1.5 mm (0.059 in.)
Minimum thickness: 1.0 mm (0.039 in.)

If the thrust bushing thickness is less than minimum, replace the thrust bushing.

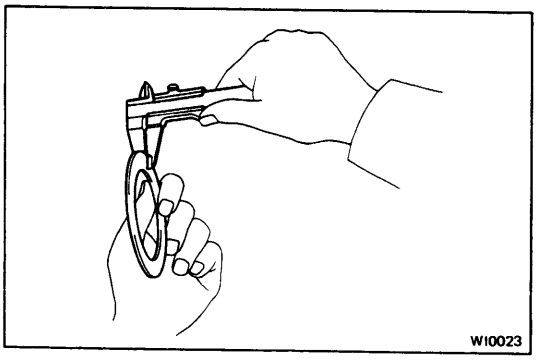

9. INSPECT WINCH DRUM THRUST WASHER

Using calipers, measure the thrust washer thickness.

Standard thickness: 2.0 mm (0.079 in.)
Minimum thickness: 1.6 mm (0.063 in.)

If the thrust washer thickness is less than minimum, replace the thrust washer.

10. INSPECT PLANETARY GEAR UNIT NO.1, NO.2, NO.3 AND SUN GEAR

(a) Turn each bearing by hand while appling inward force.

If resistance is felt or if the bearing sticks, replace the planetary gear unit assembly.

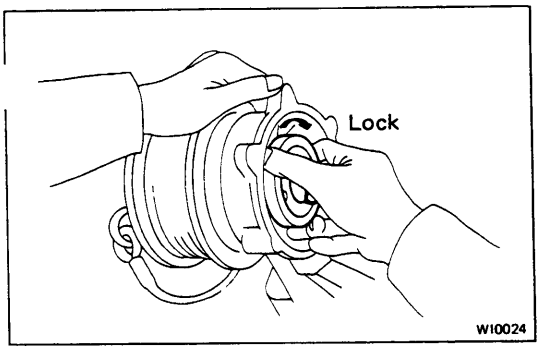

11. CHECK OPERATION OF ONE-WAY CLUTCH

(a) Install the clutch outer race to the winch gear case.

(b) Hold the winch gear case and turn the clutch outer race. The clutch outer race should turn freely counter-clockwise and should lock clockwise.

If the one-way clutch does not work properly, replace it.

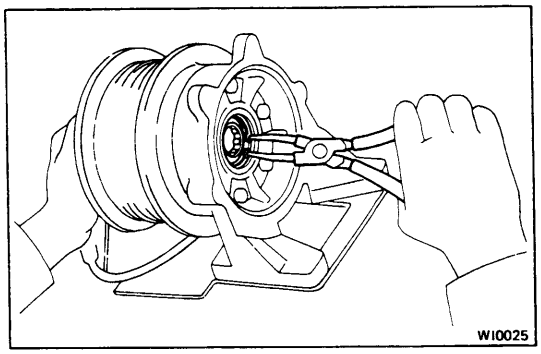

12. REPLACE ONE-WAY CLUTCH

(a) Using snap ring pliers, remove the snap ring from the winch gear case.

(b) Remove the one-way clutch from the winch gear case.

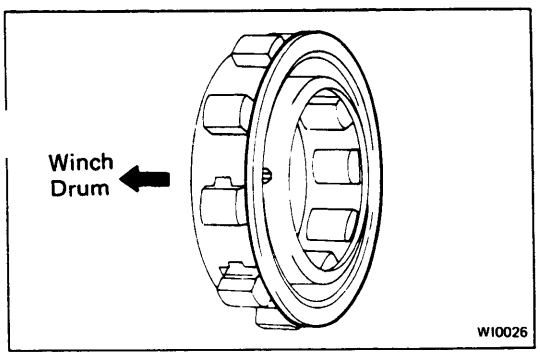

(c) Install the one-way clutch to the winch gear case.

(d) Using snap ring pliers, install the snap ring to the winch gear case.

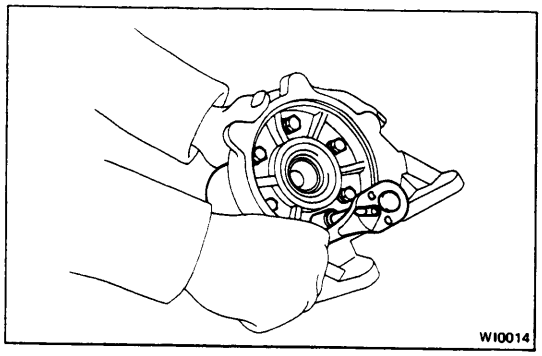

INSTALLATION OF WINCH

1. **INSTALL RING GEAR**
   (a) Install a new gasket on the winch gear case.
   (b) Install and torque the mount bolts uniformly.
   Torque: 195 kg-cm (14 ft-lb, 19 N·m)

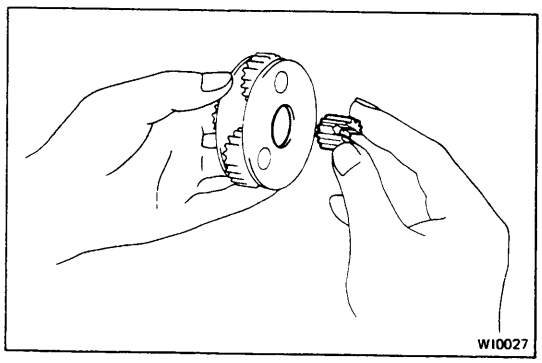

2. **INSTALL PLANETARY GEAR UNIT AND SUN GEAR**
   (a) Apply automatic transmission fluid to each gear.
   (b) Install the sun gear to planetary gear unit No.1.

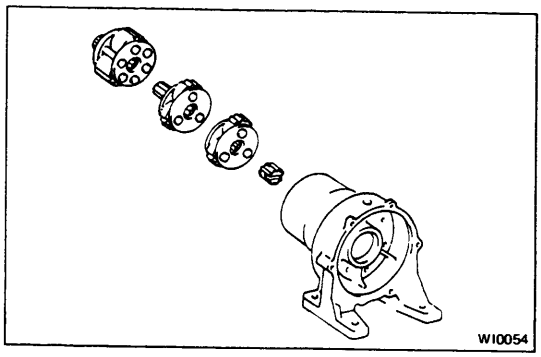

   (c) Install planetary gear unit No.1 with the sun gear to the ring gear.
   (d) Install planetary gear units No.2 and No.3 to the ring gear.

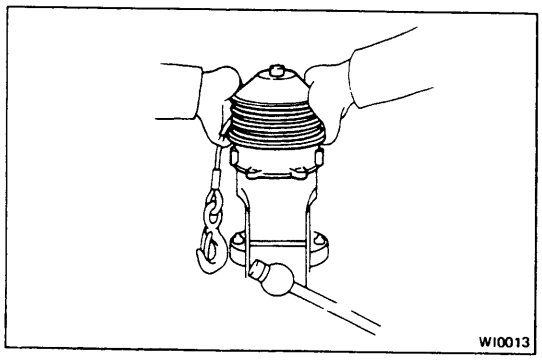

3. **INSTALL WINCH DRUM AND WINCH DRUM PLATE**
   (a) Apply MP grease to the winch drum oil seal, winch drum bushing, thrust bushing and thrust washer.
   (b) Install the winch drum with the thrust washer to the winch gear case.
   (c) Install the winch drum plate with thrust bushing.

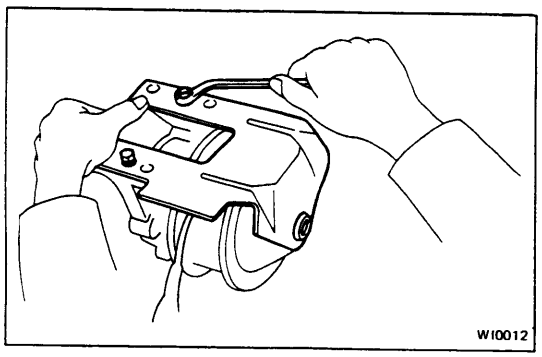

   (d) Install and torque the bolts.
   Torque: 195 kg-cm (14 ft-lb, 19 N·m)
   NOTE: When tightening the bolts, be sure the winch drum is tight against the thrust washer and there is no clearance.

4. INSTALL INPUT SHAFT WITH THRUST BUSHING TO CLUTCH OUTER RACE GUIDE

CAUTION: Soak a new clutch outer race in automatic transmission fluid for at least two hours before assembly.

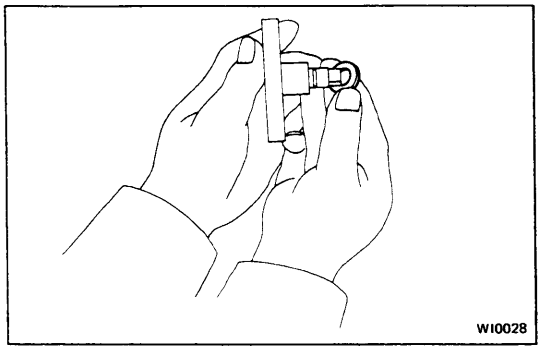

(a) Apply MP grease to the winch gear case bushing and the clutch outer race bushing.

(b) Install input shaft to the clutch outer race.

(c) Install the thrust bushing No.2 to the input shaft.

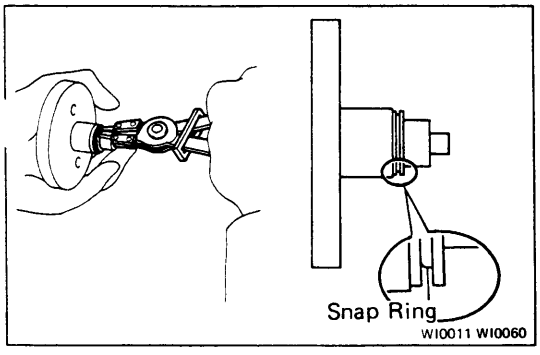

(d) Using snap ring pliers, install the snap ring to the input shaft.

CAUTION: Install a new snap ring into the groove, being careful not to spread it apart too much and facing it into the direction shown.

(e) Install the thrust bushing No.2 to the input shaft.

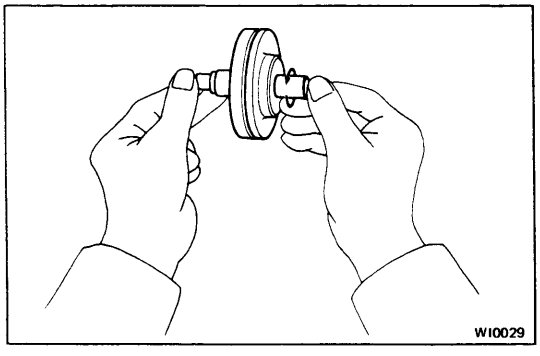

5. INSTALL INNER DISC GUIDE TO CLUTCH OUTER RACE ASSEMBLY

NOTE: Install the inner disc guide, turning it counterclockwise.

6. INSTALL CLUTCH OUTER RACE ASSEMBLY AND INNER DISC GUIDE TO WINCH GEAR CASE

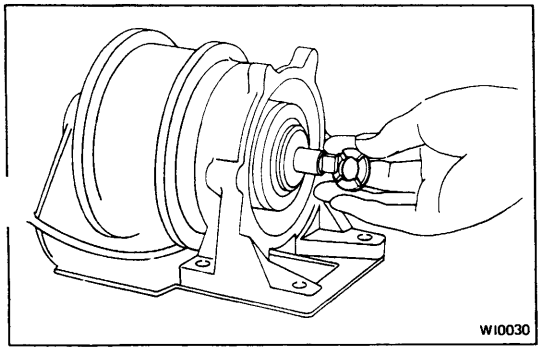

7. INSTALL THRUST BUSHING NO.1

CAUTION: Install thrust bushing No. 1 facing the groove toward the inner disc guide.

MOTOR

COMPONENTS

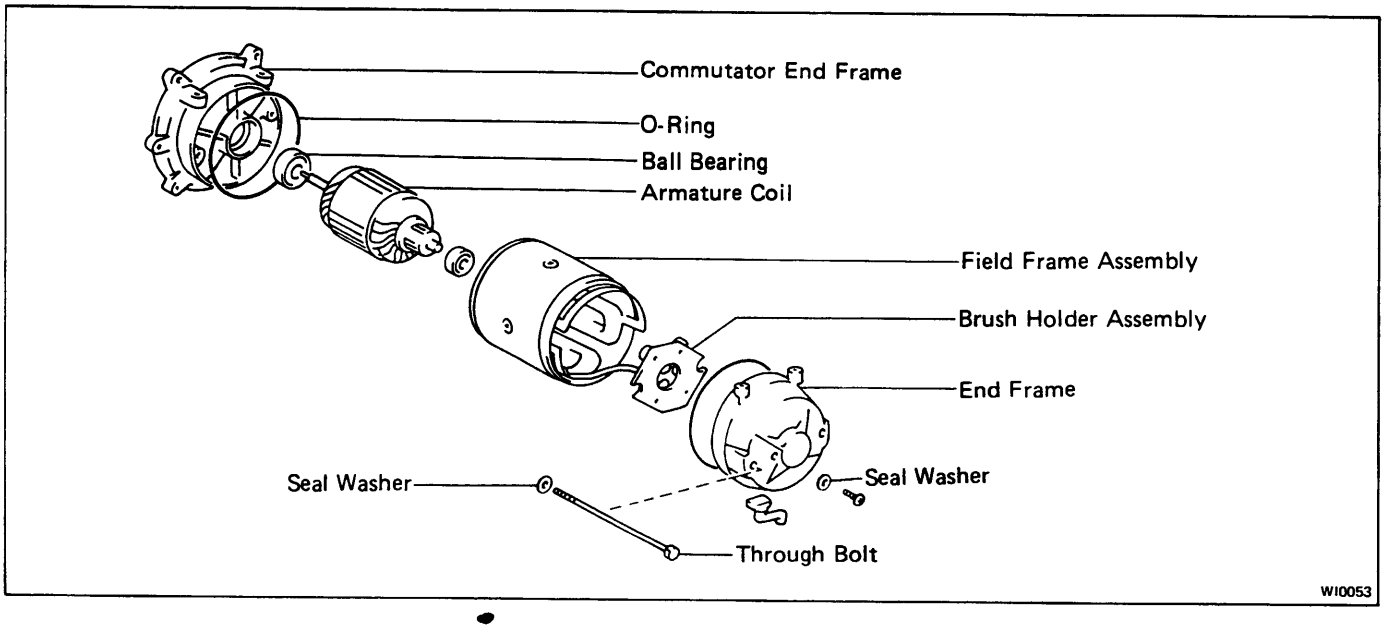

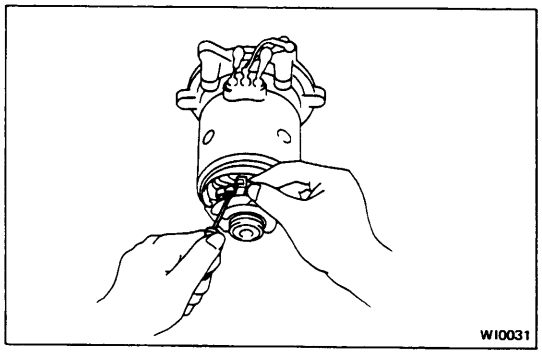

DISASSEMBLY OF WINCH MOTOR

1. **REMOVE END COVER AND FIELD FRAME WITH BRUSH HOLDER**
   (a) Remove the two through bolts and two screws. Then remove the end frame.
   (b) Using a screwdriver, remove the brushes from the brush holder.
   (c) Remove the field frame with the brush holder from the end frame.

2. **REMOVE ARMATURE FROM COMMUTATOR END FRAME**

INSPECTION OF WINCH MOTOR ARMATURE COIL

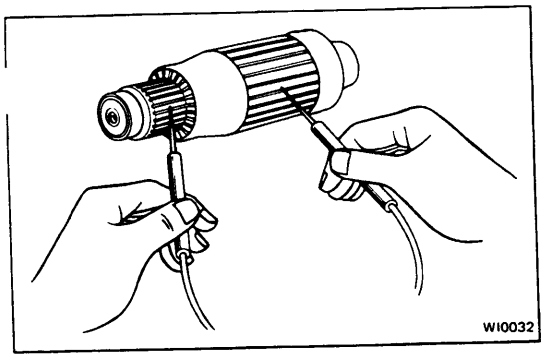

1. INSPECT THAT COMMUTATOR IS NOT GROUNDED

Using an ohmmeter, check that there is no continuity between the commutator and armature core.
If there is contiunity, replace the armature.

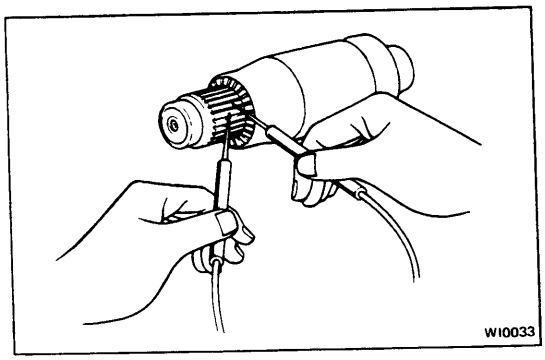

2. INSPECT COMMUTATER FOR OPEN CIRCUIT

Using an ohmmeter, check for continuity between the segment of the commutator.
If there is no continuity between any segment, replace the armature.

COMMUTATOR

1. INSPECT COMMUTATOR FOR DIRTY OR BURNT SURFACE

If the surface is dirty or burnt, correct with sandpaper (NO.400) or a lathe.

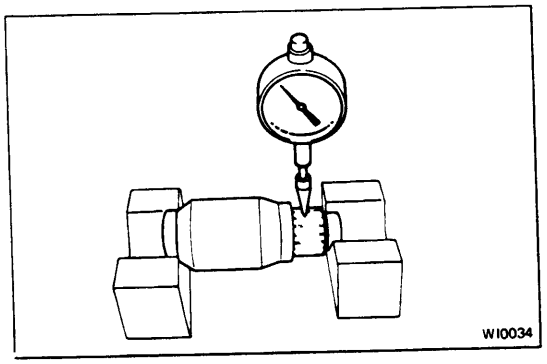

2. INSPECT COMMUTATOR CIRCLE RUNOUT

Using a dial indicator, measure the circle runout of the commutator.
If the circle runout is greater than the maximum, correct with a lathe.

Maximum runout: 0.4 mm (0.157 in.)

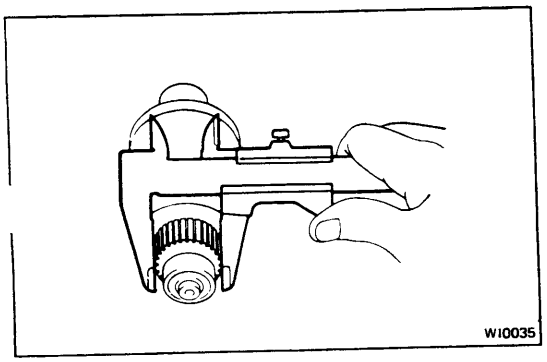

3. MEASURE DIAMETER OF COMMUTATOR

Using calipers, measure the diameter of the commutator.
If the diameter of the commutator is less than the minimum, replace the armature.

Standard diameter: 28.0 mm (1.102 in.)
Minimum diameter: 27.0 mm (1.063 in.)

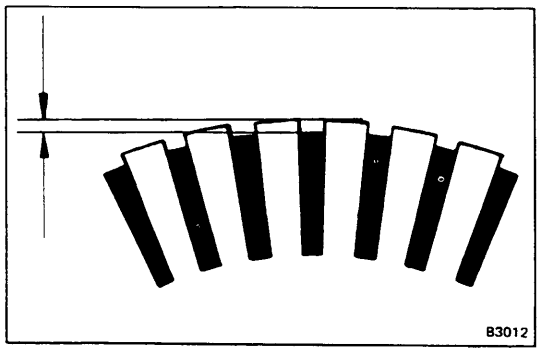

4. INSPECT UNDERCUT DEPTH

Check that the undercut depth is clean and free of foreign particles. Then smooth off the edge.
If the undercut depth is less than the minimum, correct with a hacksaw blade.

Standard undercut depth: 0.5 – 0.8 mm (0.020 – 0.031 in.)
Minimum undercut depth: 0.2 mm (0.008 in.)

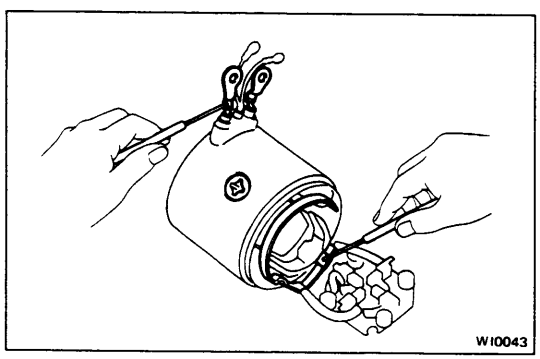

FIELD COIL

1. INSPECT FIELD COIL FOR OPEN CIRCUIT

Using an ohmmeter, check for continuity between the lead wire and field brush lead.
If there is no continuity, replace the field coil.

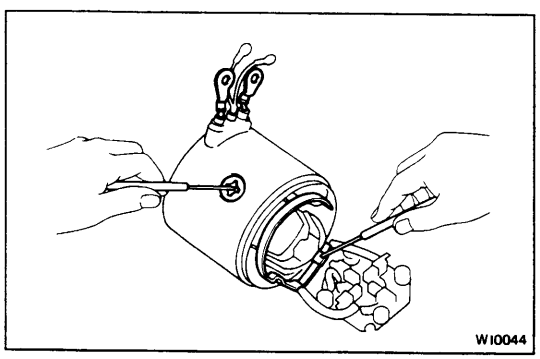

2. INSPECT THAT FIELD COIL IS NOT GROUNDED

Using an ohmmeter, check for continuity between the field coil brush lead and field frame.
If there is continuity, repair or replace the yoke sub-assembly.

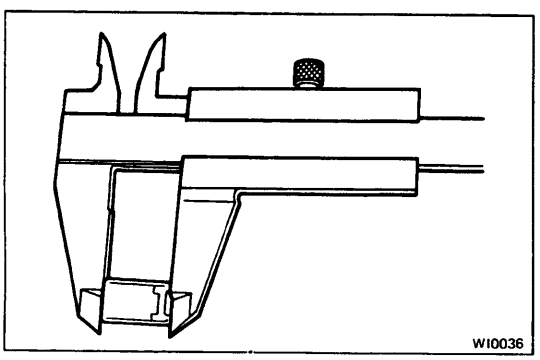

BRUSH

MEASURE BRUSH LENGTH

Using calipers, measure length of the brush.

Standard length: 16.0 mm (0.630 in.)
Minimum length: 10.5 mm (0.413 in.)

If the brush length is less than the minimum, replace the brush holder assembly.

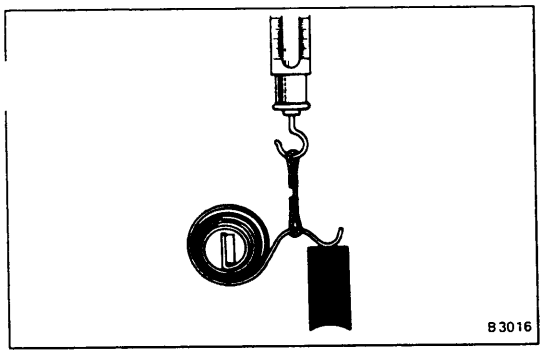

BRUSH SPRING

MEASURE BRUSH SPRING LOAD

Using a pull scale, measure the installed load of the brush spring.

Standard installed load: 1.6 kg (3.5 lb)
Minimum installed load: 1.0 kg (2.2 lb)

NOTE: Take the pull scale reading at the very instant the brush spring separates from the brush.

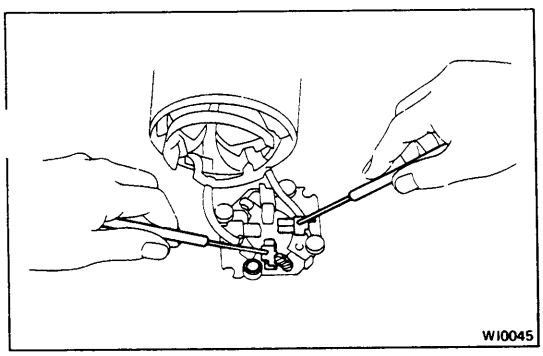

BRUSH HOLDER

INSPECT BRUSH HOLDER

Using an ohmmeter, check for continuity between the positive and negative brush holders.
If there is continuity replace the brush holder assembly.

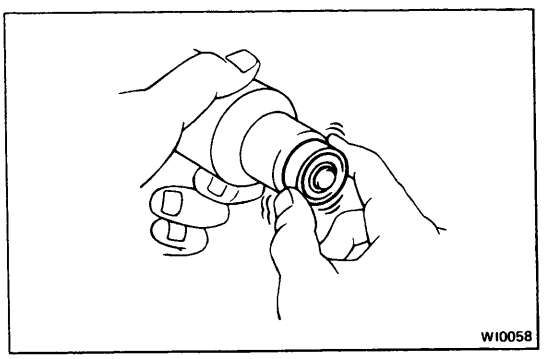

BEARING

1. INSPECT BEARING

Turn each bearing by hand while applying inward force. If resistance is felt or if the bearing sticks, replace the bearing.

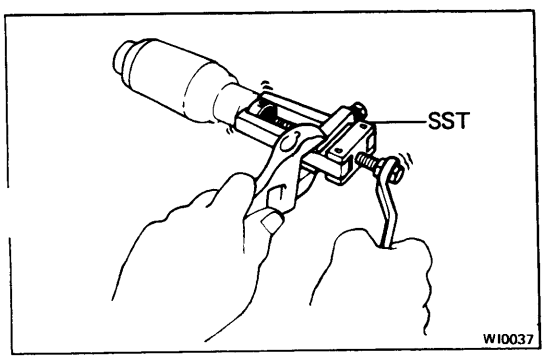

2. IF NECESSARY, REPLACE BEARINGS

(a) Using SST, remove the two bearings from the armature shaft.

SST 09286-46011

CAUTION: When removing the front bearing, use a spacer to prevent the armature shaft groove from widening.

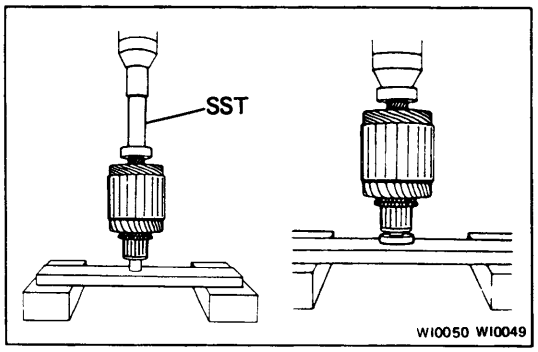

(b) Using SST and a press, tap the front bearing into the shaft.

SST 09201-31010

(c) Using a press, install the rear bearing into the shaft.

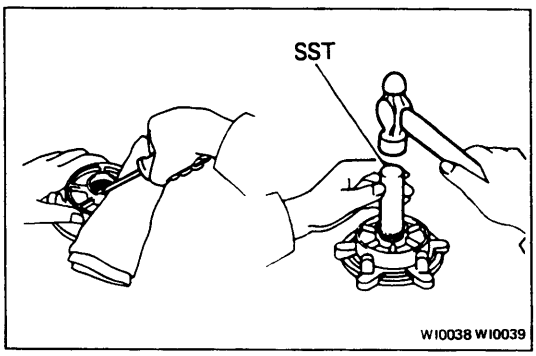

END FRAME OIL SEAL

INSPECT END FRAME OIL SEAL

If necessary, replace the end frame oil seal.

(a) Using a screwdriver, remove the end case oil seal.

(b) Using SST and a hammer, install the end frame oil seal.

SST 09236-00101

(c) Apply MP grease to the oil seal.

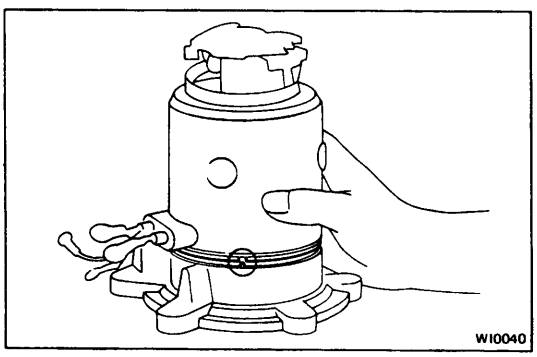

ASSEMBLY OF WINCH MOTOR

1. **INSTALL ARMATURE COIL TO COMMUTATOR END FRAME**

2. **INSTALL FIELD FRAME WITH BRUSH HOLDER AND O-RING**

   CAUTION: Match the protrusion of the field frame with the end frame.

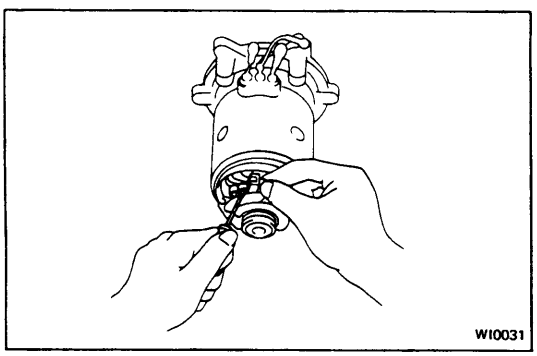

3. **INSTALL BRUSH TO BRUSH HOLDER**

   Using a screwdriver, hold the spring back and install the brush into the brush holder, and install the four brushes.

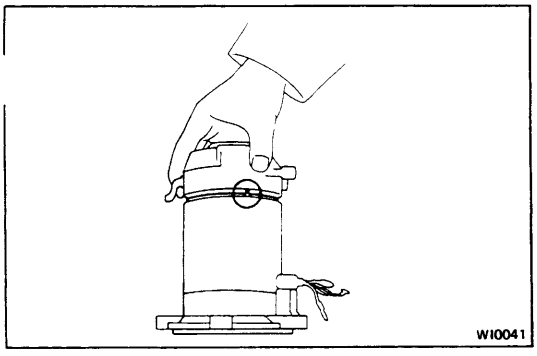

4. INSTALL END COVER

(a) Install the two screws to the end cover.

(b) Install the two through bolts to the end cover.

CAUTION: Match the protrusion of the end cover with the field frame.

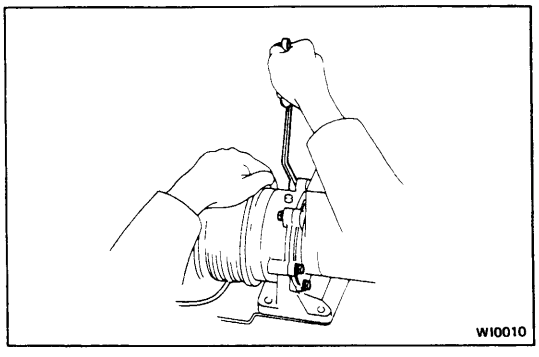

5. INSTALL WINCH MOTOR TO WINCH GEAR

(a) Install the winch motor with a new gasket.

(b) Install and torque the bolts.

Torque: 195 kg-cm (14 ft-lb, 19 N·m)

6. INSTALL DRAIN PLUG AND FILL WINCH AUTOMATIC TRANSMISSION FLUID

Fluid grade: ATF DEXRON II
Capacity: 200 cc (12.2 cu in.)
Torque: 175 kg-cm (13 ft-lb, 17 N·m)

SUB-MAGNET SWITCH

COMPONENTS

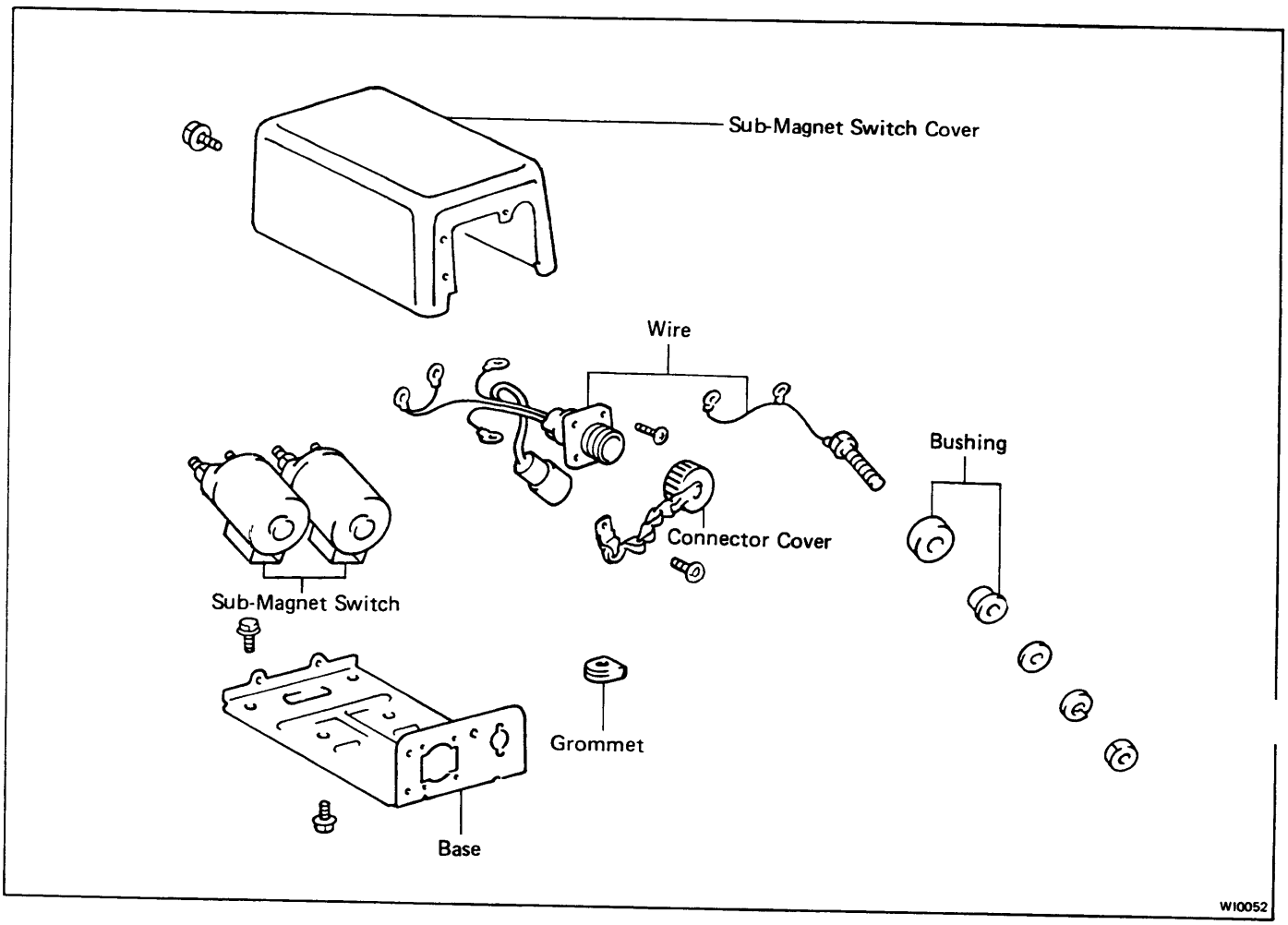

DISASSEMBLY OF SUB-MAGNET SWITCHES AND REMOTE CONTROL SWITCH

1. **DISCONNECT LEAD WIRE FROM SUB-MAGNET SWITCHES**

2. **REMOVE BASE**

   Remove the four bolts and two terminals.
   Then remove the base with the sub-magnet switches.

3. **REMOVE MAGNET SWITCHES**

   Remove the two bolts. Then remove the sub-magnet switches from the base.

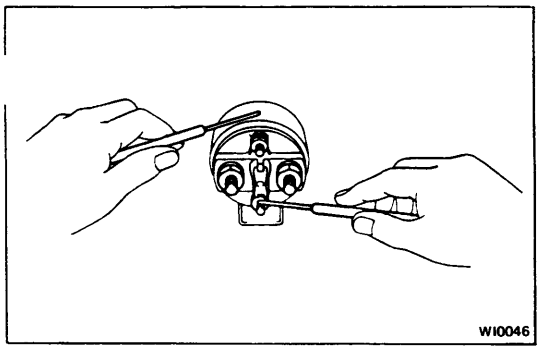

INSPECTION AND REPAIR OF SUB-MAGNET SWITCH

1. INSPECT THAT SOLENOID COIL IS NOT GROUNDED

Using an ohmmeter, check for continuity between the solenoid coil lower terminal and frame.

If there is continuity, replace the sub-magnet switch.

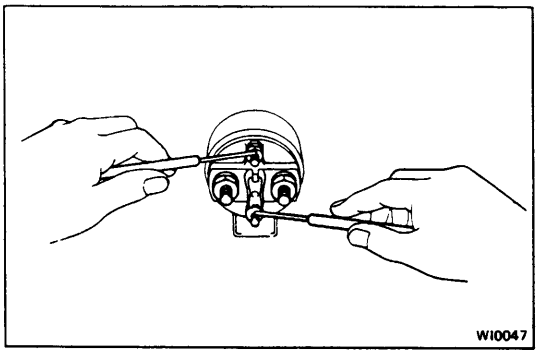

2. INSPECT SOLENOID COIL FOR OPEN CIRCUIT

Using an ohmmeter, check for continuity between the solenoid coil terminals.

If there is no continuity, replace the sub-magnet switch.

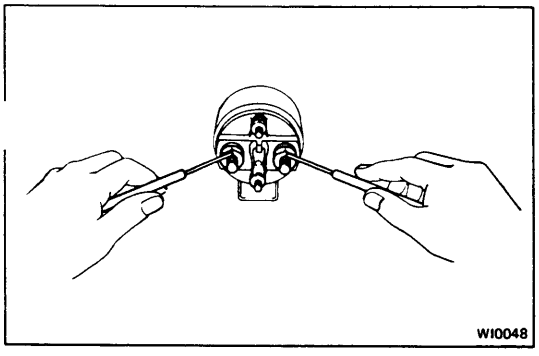

3. INSPECT THAT MAIN TERMINAL HAS NO CONTINUITY

Using an ohmmeter, check for continuity between the sub-magnet switch's main terminals.

Since the solenoid is not magnetized, the main terminal should have no continuity.

If necessary, replace the magnet switch.

ASSEMBLY OF SUB-MAGNET SWITCH

1. **INSTALL SUB-MAGNET SWITCH TO BASE**

2. **INSTALL BASE WITH SUB-MAGNET SWITCH TO MOTOR**

   Install the four bolts with two terminals to the base with the magnet switch.

3. **CONNECT FOLLOWING WIRES:**

   - Solenoid control lead
   - Thermo switch lead
   - Positive lead

   NOTE: Assemble the terminals as shown below.

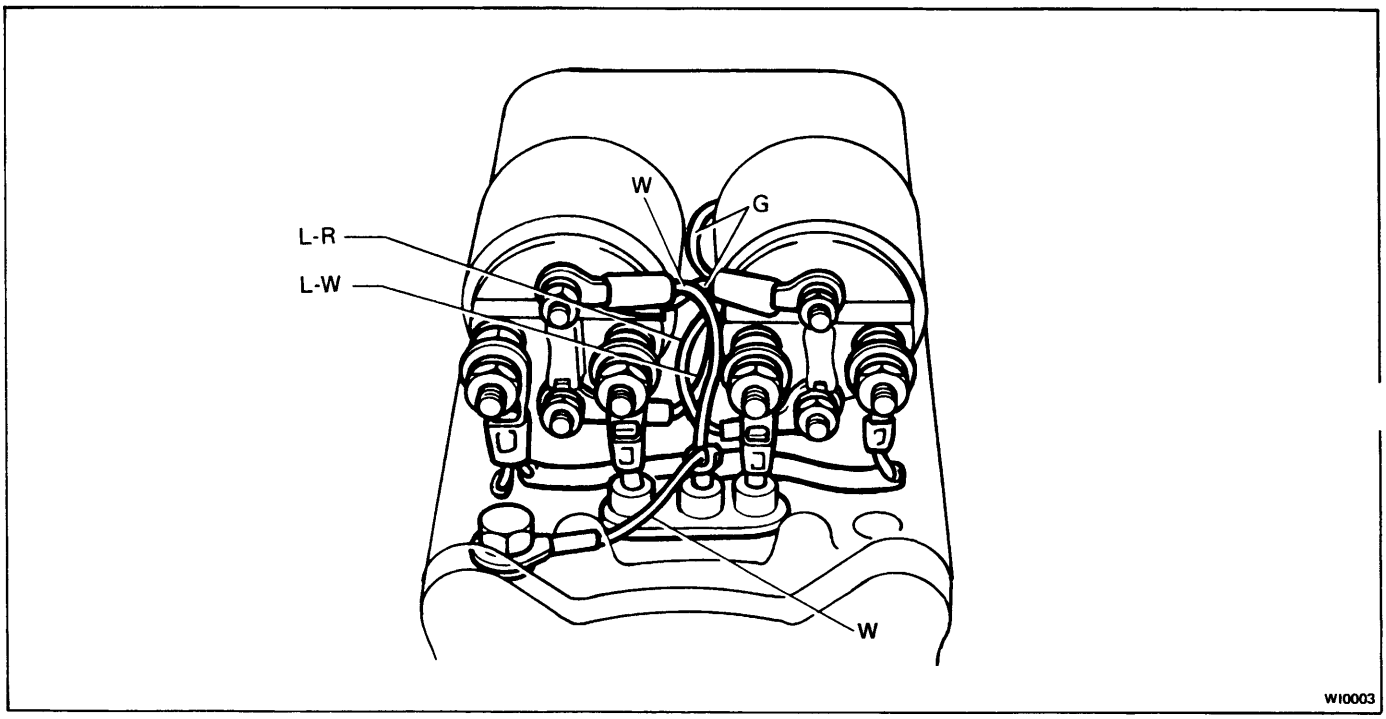

4. **INSTALL SUB-MAGNET SWITCH COVER**

5. **INSTALL CONNECTOR COVER**

6. **INSTALL WINCH ASSEMBLY AND ANTI-THEFT BOLT**

   (a) Install the winch assembly to the bracket.

   (b) Install the four mount bolts and nuts by hand.

   (c) Install the anti-theft bolt by hand.

   (d) Torque the four mount bolts and nuts.

   Torque: 930 kg-cm (67 ft-lb, 91 N·m)

   (e) Install the wire guide and torque the two bolts.

   Torque: 190 kg-cm (14 ft-lb, 19 N·m)

   (f) Torque the anti-theft bolt untill the bolt head break off.

   Torque: 40 — 70 kg-cm (35 — 60 in.-lb, 4.0 — 6.8 N·m)

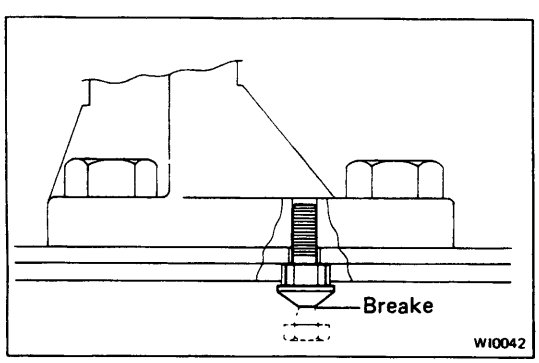

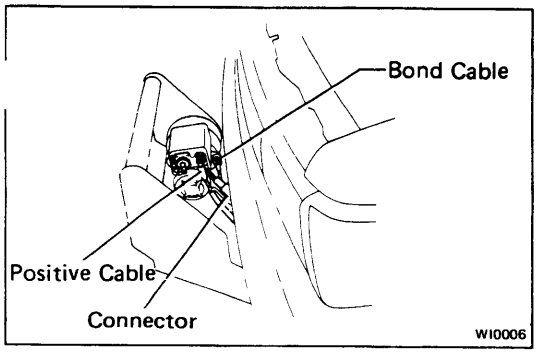

7. **CONNECT FOLLOWING WIRE HARNESS:**
   - Two terminal conectors
   - Bond cable
   - Positive cable

8. **INSTALL MAIN MAGNET SWITCH**
   (a) Install the main magnet switch to the vehicle.
   (b) Connect the connector.
   (c) Connect the cable.

9. **CONNECT NEGATIVE CABLE TO BATTERY**

BRACKET

COMPONENTS

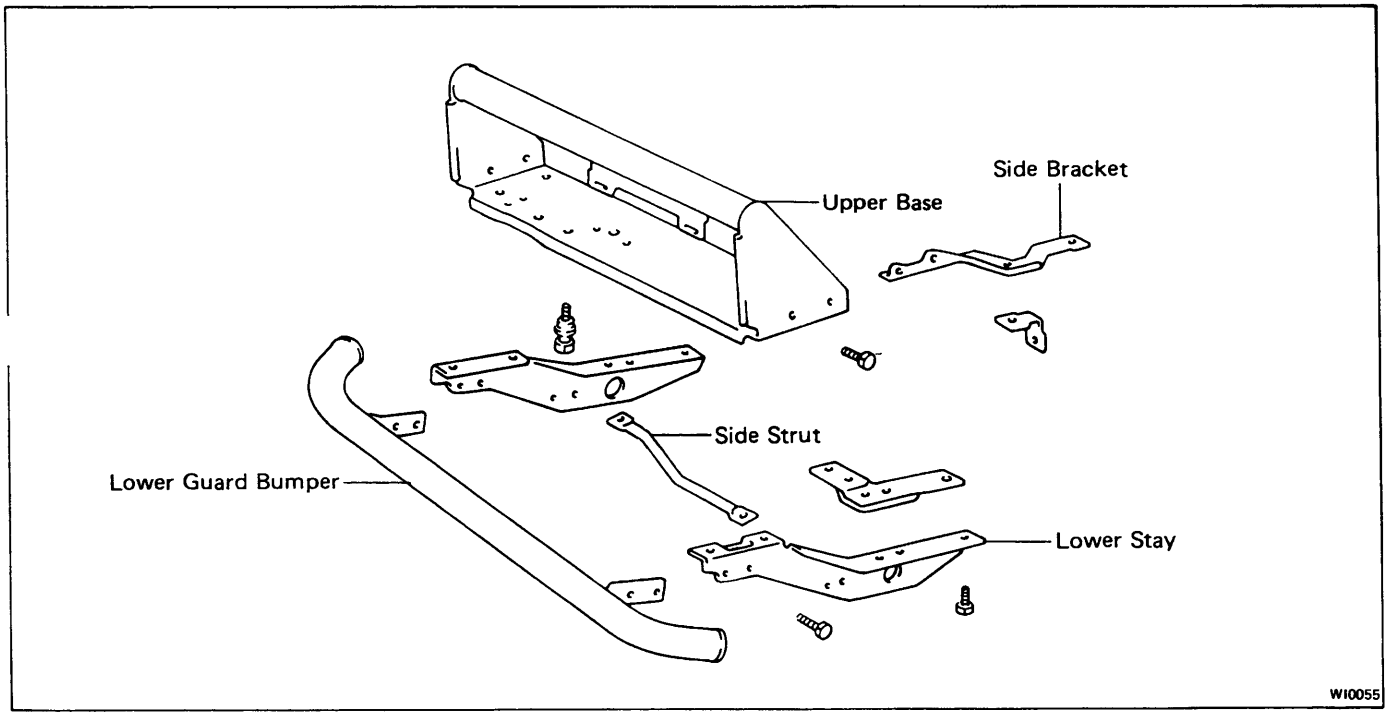

AIR CONDITIONING SYSTEM

	Page
PRECAUTIONS	AC-2
TROUBLESHOOTING	AC-2
Checking of Refrigeration System with Manifold Gauge	AC-4
SPECIAL TOOLS AND EQUIPMENT	AC-8
AIR CONDITIONING SYSTEM CIRCUIT	AC-9
ON-VEHICLE INSPECTION	AC-12
REFRIGERATION SYSTEM	AC-13
Checking of Refrigerant Charge	AC-13
Installation of Manifold Gauge Set	AC-13
Discharging of Refrigeration System	AC-14
Evacuating and Charging of Refrigeration System	AC-14
Performance Test	AC-17
SYSTEM COMPONENTS	AC-19
COMPRESSOR	AC-20
CONDENSER	AC-33
RECEIVER	AC-34
COOLING UNIT	AC-34
Evaporator	AC-36
Expansion Valve	AC-36
Thermistor	AC-36
REFRIGERANT LINES	AC-38
A/C SWITCH	AC-38
LOW PRESSURE SWITCH	AC-39
THERMO SWITCH	AC-39
THERMO RELAY	AC-39
AIR CONDITIONER AMPLIFIER	AC-40
VACUUM SWITCHING VALVE (VSV)	AC-41

PRECAUTIONS

1. **The following precautions should be observed when handling refrigerant(R-12):**
   (a) Always wear eye protection.
   (b) Keep the refrigerant container(service drum)below 40°C(104°F).
   (c) Do not handle refrigerant in an enclosed area where there is an open flame.
   (d) Discharge refrigerant slowly when purging the system.
   (e) Be careful that the liquid refrigerant does not get on your skin.

2. **If liquid refrigerant gets in the eyes or on the skin:**
   (a) Do not rub.
   (b) Wash the area with a lot of cool water.
   (c) Apply clean petroleum jelly to the skin.
   (d) Rush to a physician or hospital for immediate professional treatment.
   (e) Do not attempt to treat yourself.

3. **When tubing:**
   (a) Apply a few drops of compressor oil to the seats of the O-ring fittings.
   (b) Use two wrenches to tighten the nuts to prevent twisting the tube.
   (c) Tighten the O-ring fitting to the specified torque.

Tightening torque for O-ring fittings

Fitting size	Torque
3/8 in.Tube	135 kg-cm (10 ft-lb, 13 N·m)
1/2 in.Tube	225 kg-cm (16 ft-lb, 22 N·m)
5/8 in.Tube	325 kg-cm (24 ft-lb, 32 N·m)

TROUBLESHOOTING

Problem	Possible cause	Remedy	Page
No cooling or warm air	Magnetic clutch does not engage		
	(a) A/C fuse blown	Replace fuse and check for short	AC-9 to 11
	(b) Magnetic clutch faulty	Check magnetic clutch	AC-20
	(c) A/C switch faulty	Check switch	AC-38
	(d) A/C amplifier faulty	Check amplifier	AC-40
	(e) Wiring or ground faulty	Repair as necessary	AC-9 to 11
	(f) Refrigerant empty	Check refrigerant pressure	AC-13
	(g) Heater relay faulty	Check heater relay	AC-9 to 11
	(h) Circuit breaker faulty	Check circuit breaker	AC-9 to 11
	(i) Pressure switch faulty	Check pressure switch	AC-39
	Compressor does not rotate properly		
	(a) Drive belt loose or broken	Adjust or replace drive belt	AC-32
	(b) Compressor faulty	Check compressor	AC-20
	Expansion valve faulty	Check expansion valve	AC-36
	Leak in system	Test system for leaks	AC-15
	Fusible plug on receiver blown or clogged screen	Check receiver	AC-34

TROUBLESHOOTING (Cont'd)

Problem	Possible cause	Remedy	Page
No cooling or warm air (Cont'd)	Blower does not operate		
	(a) A/C fuse blown	Replace fuse and check for short	AC-9 to 11
	(b) A/C switch faulty	Check A/C switch	AC-38
	(c) Circuit breaker faulty	Check circuit breaker	AC-9 to 11
	(d) Heater relay faulty	Check heater relay	AC-9 to 11
	(e) Blower motor faulty	Check blower motor	
	(f) Wiring faulty	Repair as necessary	AC-9 to 11
Cool air comes out intermittently	Magnetic clutch slipping	Check magnetic clutch	AC-20
	Expansion valve faulty	Check expansion valve	AC-36
	Wiring connection faulty	Repair as necessary	AC-9 to 11
	Excessive moisture in system	Evacuate and charge system	AC-14
Cool air comes out only at high speed	Condenser clogged	Check condenser	AC-33
	Drive belt slipping	Check or replace drive belt	AC-32
	Compressor faulty	Check compressor	AC-20
	Insufficient or too much refrigerant	Check refrigerant charge	AC-13
	Air in system	Evacuate and charge system	AC-14
Insufficient cooling	Condenser clogged	Check condenser	AC-33
	Drive belt slipping	Check or replace drive belt	AC-32
	Magnetic clutch faulty	Check magnetic clutch	AC-20
	Compressor faulty	Check compressor	AC-20
	Expansion valve faulty	Check expansion valve	AC-36
	Air conditioner amplifier faulty	Check amplifier	AC-40
	Insufficient or too much refrigerant	Check refrigerant charge	AC-13
	Air or excessive compressor oil in system	Evacuate and charge system	AC-14
	Receiver clogged	Check receiver	AC-34
Insufficient velocity of cool air	Evaporator clogged or frosted	Clean evaporator fins or filters	AC-36
	Air leakage from cooling unit or air duct	Repair as necessary	AC-34
	Air inlet blocked	Repair as necessary	
	Blower motor faulty	Replace blower motor	

Checking of Refrigeration System with Manifold Gauge

Read the manifold gauge pressure with the following established conditions:

(a) Temperature at the air inlet 30 — 35°C(86 — 95°F)

(b) Engine running at 2,000 rpm

(c) Blower speed set at high

(d) A/C switch ON

(e) Temperature control lever set at cool

NOTE: It should be noted that the gauge indications may vary slightly due to ambient temperature conditions.

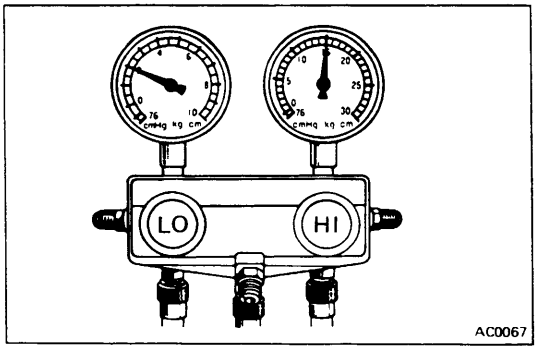

AC0067

1. NORMALLY FUNCTIONING REFRIGERATION SYSTEM

Gauge reading:

Low pressure side

1.5 — 2.0 kg/cm² (21 — 28 psi, 147 — 196 kPa)

High pressure side

14.5 — 15.0 kg/cm² (206 — 213 psi)

(1,422 — 1,471 kPa)

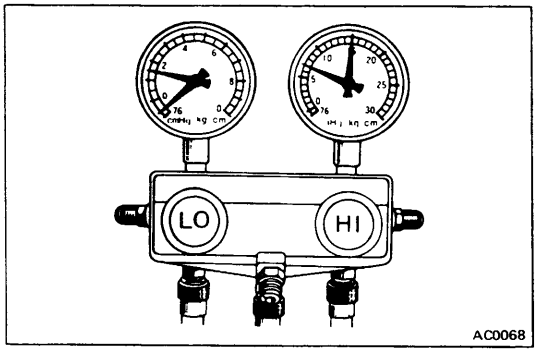

AC0068

2. MOISTURE PRESENT IN REFRIGERATION SYSTEM

Condition: Periodically cools and then fails to cool

Symptom seen in refrigeration system	Probable cause	Diagnosis	Remedy
During operation, pressure at low pressure side sometimes becomes a vacuum and sometimes normal	Moisture entered refrigeration system, freezes at expansion valve orifice and temporarily stops cycle, but normal state is restored after a time when the ice melts	Drier in oversaturated state ↓ Moisture in refrigeration system freezes at expansion valve orifice and blocks circulation of refrigerant	(1) Replace receiver and drier (2) Remove moisture in cycle through repeated vacuum purging (3) Charge refrigerant to proper amount

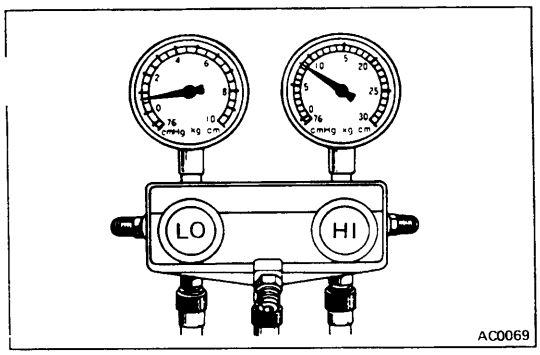

3. INSUFFICIENT REFRIGERANT

Condition: Insufficient cooling

Symptom seen in refrigeration system	Probable cause	Diagnosis	Remedy
Pressure low at both low and high pressure sides Bubbles seen in sight glass Insufficient cooling performance	Gas leakage some place in refrigeration system	Insufficient refrigerant in system ↓ Refrigerant leaking	(1) Check with leak tester and repair (2) Charge refrigerant to proper amount

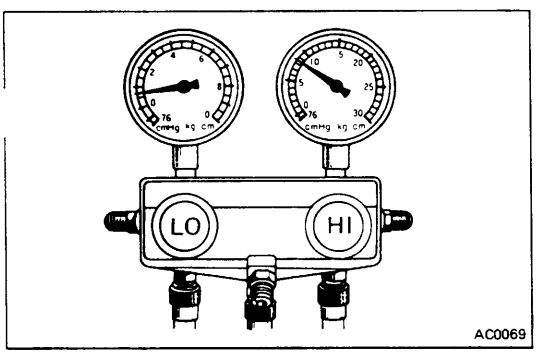

4. POOR CIRCULATION OF REFRIGERANT

Condition: Insufficient cooling

Symptom seen in refrigeration system	Probable cause	Diagnosis	Remedy
Pressure low at both low and high pressure sides Frost on tubes from receiver to unit	Refrigerant flow obstructed by dirt in receiver	Receiver clogged	Replace receiver

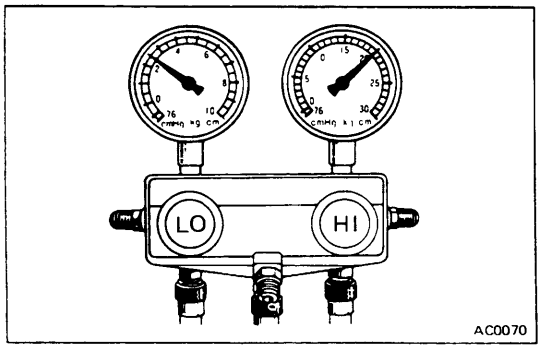

5. REFRIGERANT OVERCHARGE OR INSUFFICIENT COOLING OF CONDENSER

Condition: Does not cool sufficiently

Symptom seen in refrigeration system	Probable cause	Diagnosis	Remedy
Pressures too high at both low and high pressure sides	Unable to develop sufficient performance due to excessive refrigerant in system	Excessive refrigerant in cycle→refrigerant overcharged	(1) Clean condenser (2) Check fan motor operation (3) If (1) and (2) are in normal state, check amount of refrigerant Note: Vent out refrigerant through gauge manifold low pressure side by gradually opening valve.
	Condenser cooling insufficient	Condenser cooling insufficient→condenser fins clogged or fan motor faulty	

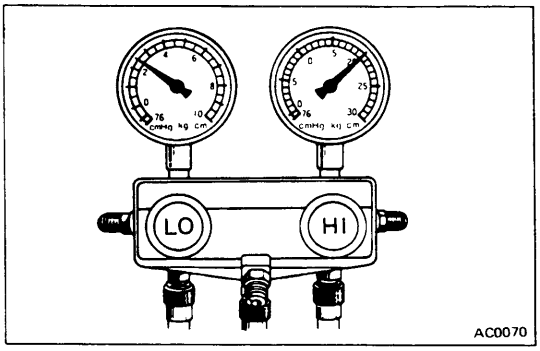

6. EXPANSION VALVE IMPROPERLY MOUNTED/ HEAT SENSING TUBE DEFECTIVE (OPENS TOO WIDE)

Condition: Insufficient cooling

Symptom seen in refrigeration system	Probable cause	Diagnosis	Remedy
Pressures too high at both low and high pressure sides	Trouble in expansion valve or heat sensing tube not installed correctly	Excessive refrigerant in low pressure piping ↓	(1) Check heat sensing tube installation (2) If (1) is normal, test expansion valve in unit
Frost or large amount of dew on piping at low pressure side	Refrigerant flow out of adjustment	Expansion valve opened too wide	Replace if defective

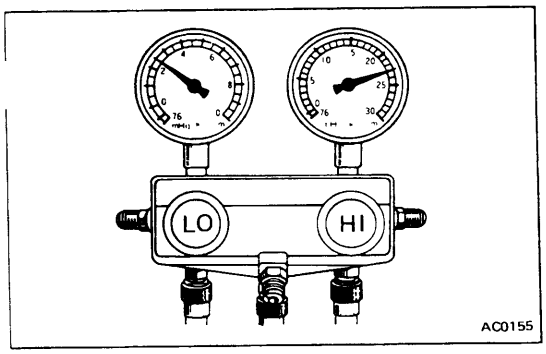

7. AIR PRESENT IN REFRIGERATION SYSTEM

Condition: Does not cool down sufficiently

NOTE: These gauge indications are shown when the refrigeration system has been opened and the refrigerant charged without vacuum purging.

Symptom seen in refrigeration system	Probable cause	Diagnosis	Remedy
Pressures too high at both low and high pressure sides	Air entered refrigeration system	Air present in refrigeration system ↓ Insufficient vacuum purging	(1) Replace receiver and drier (2) Check for dirty or insufficient compressor oil (3) Vacuum purge and charge new refrigerant

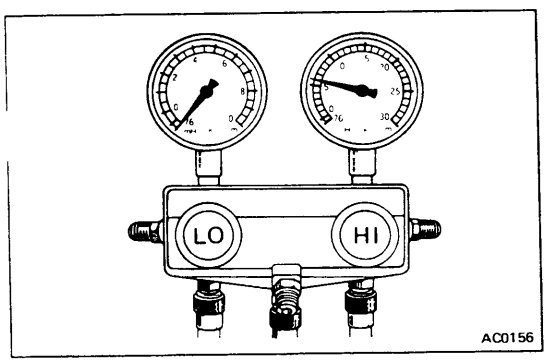

8. REFRIGERANT DOES NOT CIRCULATE

Condition: Does not cool (Cools from time to time in some cases)

Symptom seen in refrigeration system	Probable cause	Diagnosis	Remedy
Vacuum indicated at low pressure side, very low pressure indicated at high pressure side Frost or dew seen on piping before and after receiver and drier or expansion valve	Refrigerant flow obstructed by moisture or dirt refrigerant freezing or adhering to expansion valve orifice Refrigerant flow obstructed by gas leakage from expansion valve heat sensing tube	Expansion valve orifice clogged ↓ Refrigerant does not flow	Allow to stand for sometime and then restart operation to determine if trouble is caused by moisture or dirt. If caused by moisture refer to step 2 on page AC-4. If caused by dirt, remove expansion valve and clean off dirt by blowing with air. If unable to remove dirt, replace valve. Vacuum purge and charge refrigerant to proper amount. If gas leakage from heat sensing tube, replace expansion valve.

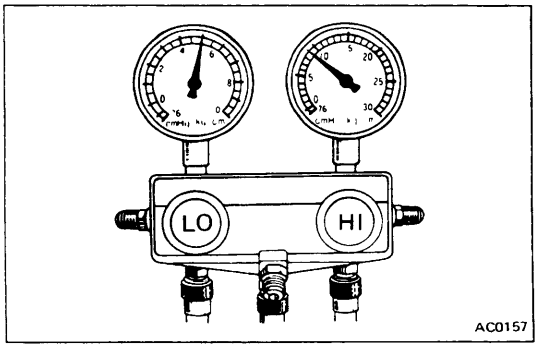

9. INSUFFICIENT COMPRESSION

Condition: Does not cool

Symptom seen in refrigeration system	Probable cause	Diagnosis	Remedy
Pressure too high at low pressure side Pressure too low at high pressure side	Internal leak in compressor	Compression defective ↓ (Valves, sliding parts piston, cylinder, gasket, etc.)	Replace or repair compressor

SPECIAL TOOLS AND EQUIPMENT

Tool	SST No.	Use
Manifold gauge set	07110-78010	To evacuate and charge system
Ohmmeter		To electrical diagnosis
Testing nozzle	07115-71010	To test expansion valve
Magnetic clutch tool set	07110-77011	Includes all of the following
Pressure plate remover	07112-71010	To remove pressure plate
Snap ring pliers	07114-84020	To remove pressure plate
Key remover	07112-45021	To remove key
Shaft plate remover	07112-15010	To remove shaft plate
Shaft seal remover	07114-15010	To remove shaft seal
Hexagon wrench set	07110-61050	To remove service valves and front housing
Shaft plate installing tool	07112-25010	To install shaft plate
Key press tool	07114-45010	To install key

AIR CONDITIONING SYSTEM CIRCUIT

22R Engine

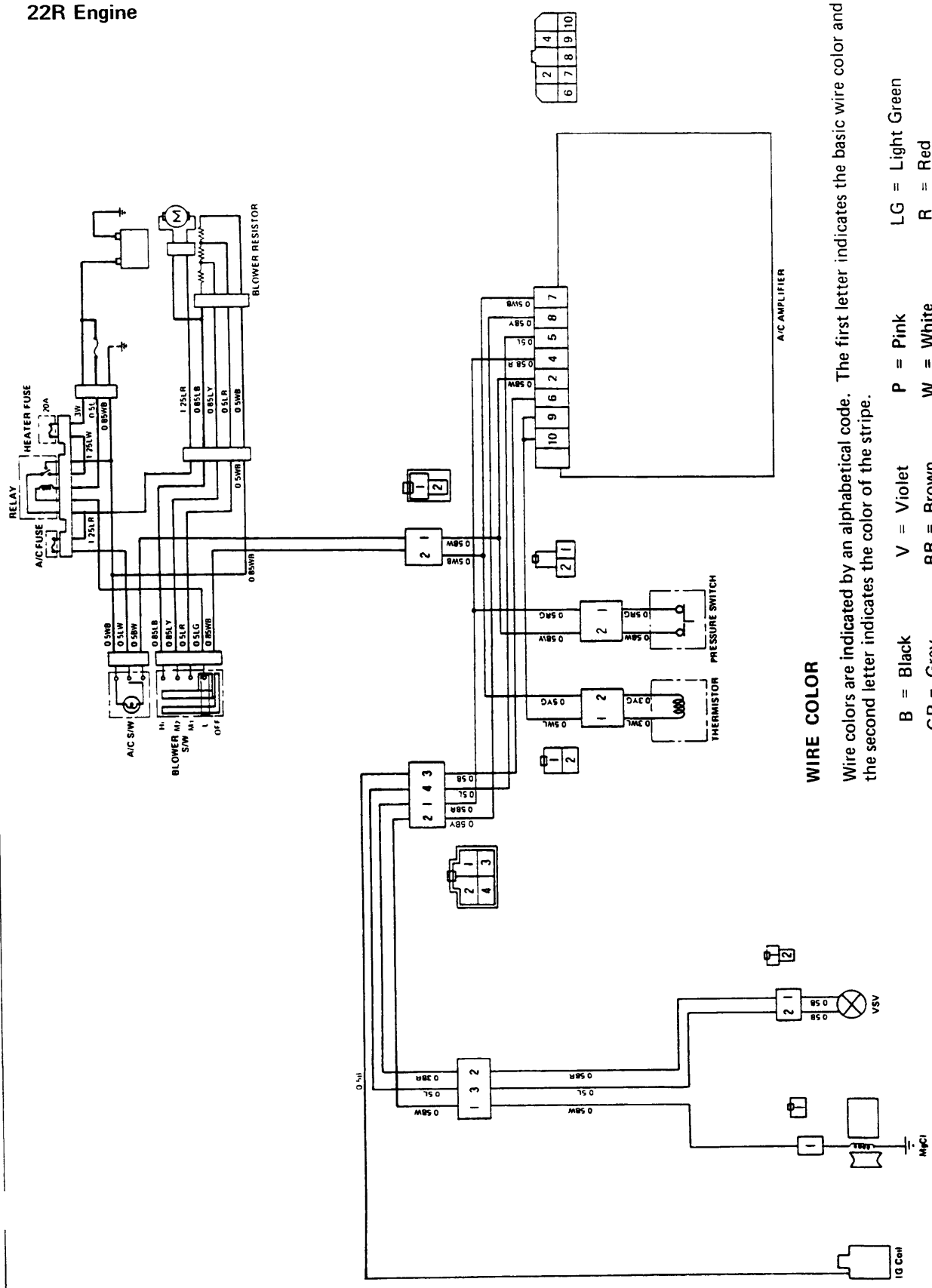

WIRE COLOR

Wire colors are indicated by an alphabetical code. The first letter indicates the basic wire color and the second letter indicates the color of the stripe.

B = Black	V = Violet	P = Pink	LG = Light Green
GR = Grey	BR = Brown	W = White	R = Red
O = Orange	L = Light Blue	G = Green	Y = Yellow

Example: R-G indicates a Red wire with a Green stripe.

AC0287

AIR CONDITIONING SYSTEM CIRCUIT (Cont'd)

22R-E Engine

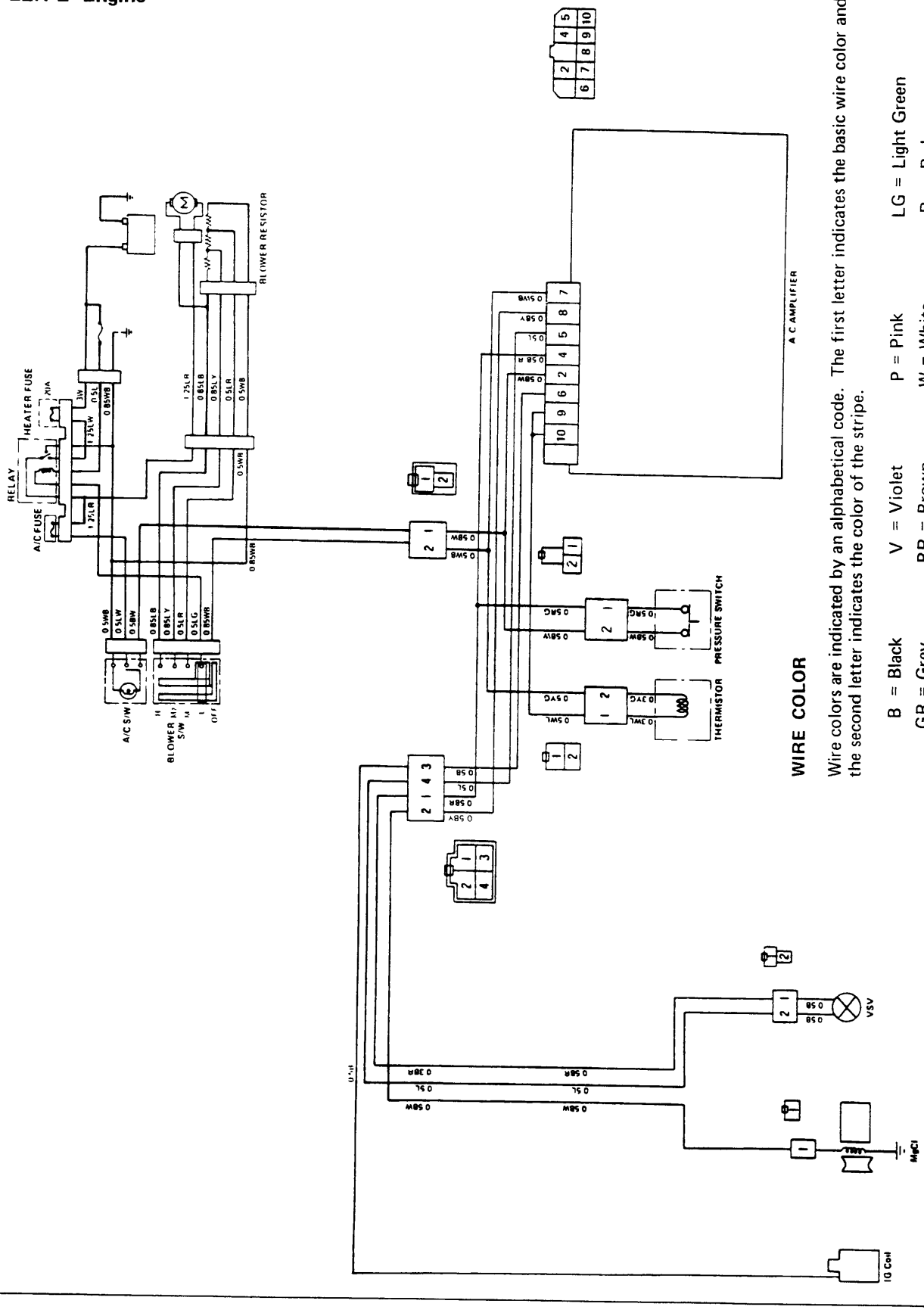

AC0288

AIR CONDITIONING SYSTEM CIRCUIT (Cont'd)

22R-E Engine Towing Package Model

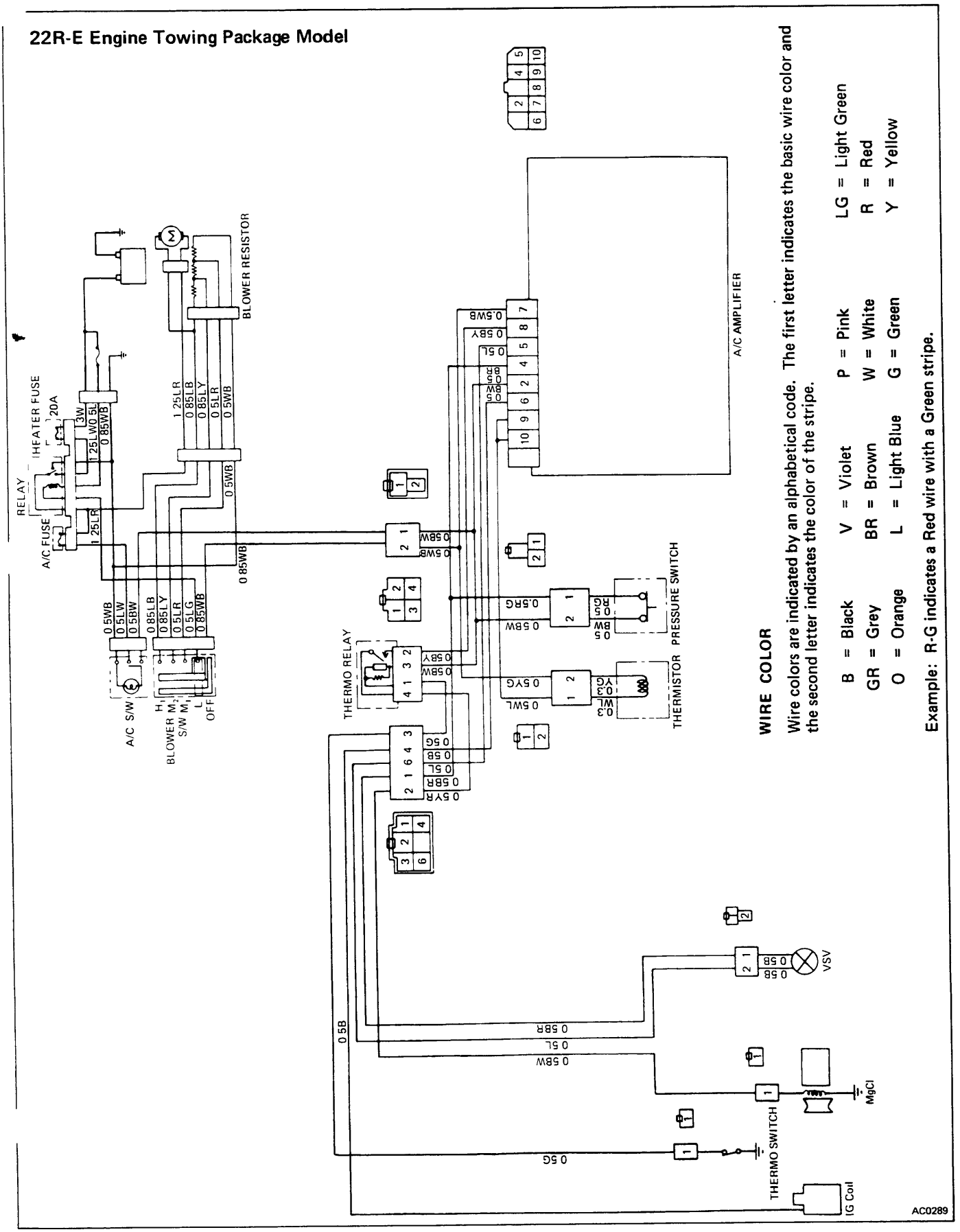

ON-VEHICLE INSPECTION

1. **CHECK CONDENSER FINS FOR BLOCKAGE OR DAMAGE**

   If the fins are clogged, clean them with pressurized water.

   CAUTION: Be careful not to damage the fins.

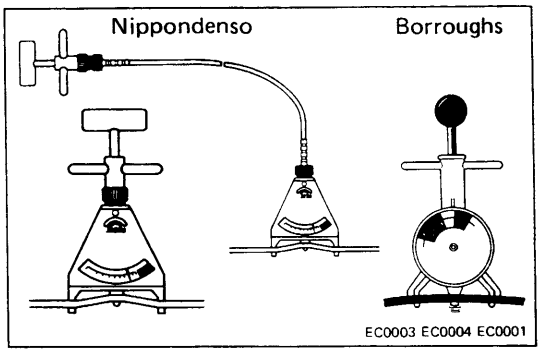

2. **CHECK DRIVE BELT TENSION**

   Using a belt tension gauge, check the drive belt tension.

   Belt tension gauge:

   Nippondenso BTG-20 (95506-00020) or
   Borroughs No. BT-33-73F

   Drive belt tension:

   New belt 125±25 lb
   Used belt 80±20 lb

   NOTE:
   - "New belt" refers to a brand new belt which has never before been used.
   - "Used belt" refers to a belt which has been used on a running engine for 5 minutes or more.

3. **START ENGINE**

4. **TURN ON A/C SWITCH**

   Check that the A/C operates at each position of the blower switch.

   If blower does not operate, check heater fuse.

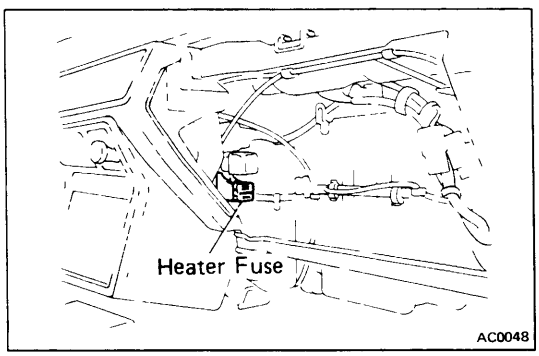

5. **CHECK MAGNETIC CLUTCH OPERATION**

6. **CHECK THAT IDLE INCREASES**

   When the magnetic clutch engages, engine revolution should increase.

   Standard idle up rpm: 900 — 1,000 rpm

7. **CHECK AMOUNT OF REFRIGERANT**

   If you can see bubbles in the sight glass, additional refrigerant is needed. (See page AC-13)

8. **IF NO OR INSUFFICIENT COOLING, INSPECT FOR LEAKAGE**

   Using a gas leak tester, inspect each component of the refrigeration system.

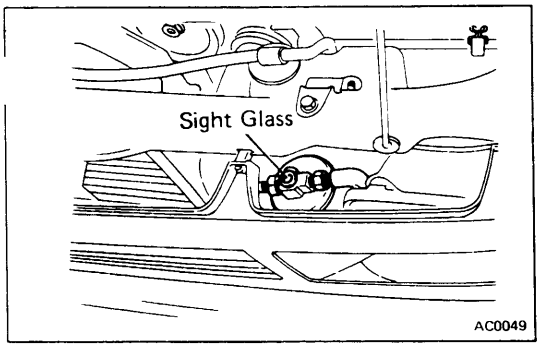

REFRIGERATION SYSTEM
Checking of Refrigerant Charge

1. **RUN ENGINE AT FAST IDLE**
2. **OPERATE AIR CONDITIONER AT MAXIMUM COOLING FOR A FEW MINUTES**
3. **CHECK AMOUNT OF REFRIGERANT**

   Observe the sight glass on the receiver.

Item	Symptom	Amount of refrigerant	Remedy
1	Bubbles present in sight glass	Insufficient	Check for leak with gas leak tester
2	No bubbles present in sight glass	None, sufficient or too much	Refer to items 3 and 4
3	No temperature difference between compressor inlet and outlet	Empty or nearly empty	Evacuate and charge system. Then check for leak with gas leak tester
4	Temperature between compressor inlet and outlet is noticeably different	Proper or too much	Refer to items 5 and 6
5	Immediately after air conditioner is turned off, refrigerant in sight glass stays clear	Too much	Discharge excess refrigerant to specified amount
6	When air conditioner is turned off, refrigerant foams and then stays clear	Proper	—

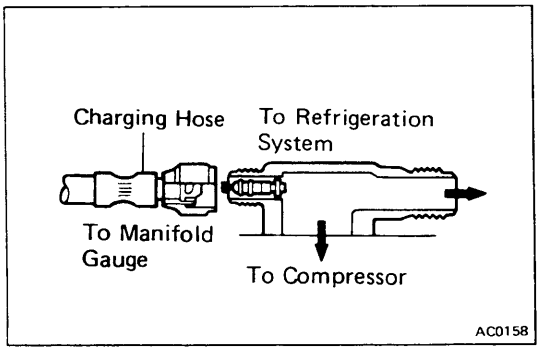

Installation of Manifold Gauge Set

NOTE: Fittings for attaching the manifold gauge set are located on the compressor service valves.

1. **CLOSE BOTH HAND VALVES OF MANIFOLD GAUGE SET**
2. **INSTALL CHARGING HOSES OF GAUGE SET TO SERVICE VALVES**

   Connect the low pressure hose to the suction service valve and the high pressure hose to the discharge service valve. Tighten the hose nuts by hand.

   NOTE: Do not apply compressor oil to the seat of the connection.

Discharging of Refrigeration System

1. **CONNECT MANIFOLD GAUGE SET TO COMPRESSO**

2. **PLACE FREE END OF CENTER HOSE IN A SHOP TOWEL**

3. **DISCHARGE SYSTEM**

   (a) Slowly open the high pressure hand valve to adjust the refrigerant flow. Do not open the valve very much.

   CAUTION: If refrigerant is allowed to escape too fast, compressor oil will be drawn out of the system.

   (b) Check the shop towel to make sure no oil is being discharged.

   If oil is present, partially close the hand valve.

   (c) After the manifold gauge reading drops below 3.5 kg/cm² (50 psi, 343 kPa), slowly open the low pressure valve.

   (d) As the system pressure drops, gradually open both high and low valves until both gauges read 0 kg/cm² (0 psi, 0 kPa).

Evacuating and Charging of Refrigeration System

NOTE:
- Whenever the air conditioning system has been exposed to the atmosphere, it must be evacuated.
- After installation of a component, the system should be evacuated for appoximately 15 minutes. A component in service that has been opened for repair should be evacuated for 30 minutes.

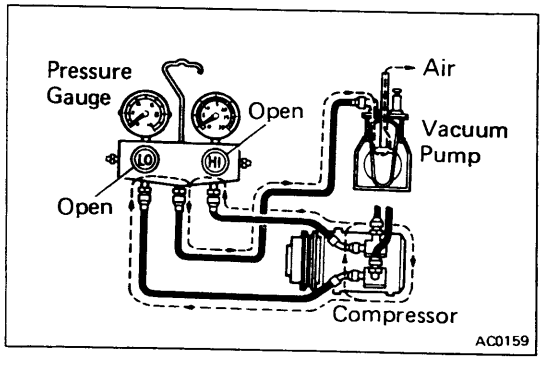

1. **EVACUATE SYSTEM**

   (a) Connect the manifold gauge set.

   (b) Install the center hose of the gauge set to the vacuum pump inlet.

   (c) Run the vacuum pump, and then open both hand valves.

   (d) After about ten minutes, check that the low pressure gauge reads more than 600 mmHg (23.62 in.Hg, 80.0 kPa) of vacuum.

   If the reading is not more than 600 mmHg (23.62 in.Hg, 80.0 kPa), close both valves and stop the vacuum pump. Check the system for leaks and repair as necessary.

   If no leaks are found, continue evacuating the system.

   (e) After the low pressure gauge indicates more than 700 mmHg (27.56 in.Hg, 93.3 kPa) of vacuum, continue evacuating for 15 minutes.

   (f) Close both hand valves, and stop the vacuum pump. Disconnect the hose from the vacuum pump.

The system is now ready for charging.

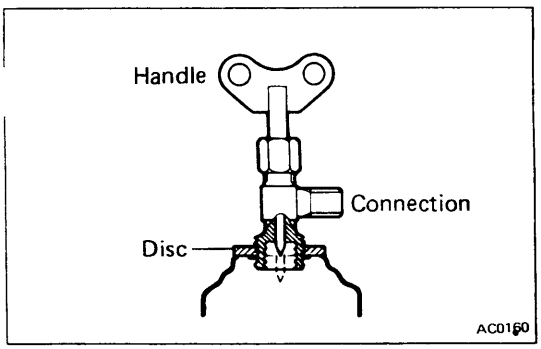

2. **INSTALL REFRIGERANT CONTAINER TAP VALVE**

CAUTION: Observe the precautions listed in the front of this section.

(a) Before installing the valve on the refrigerant container, turn the handle counterclockwise until the valve needle is fully retracted.

(b) Turn the disc counterclockwise until it reaches its highest position.

Screw down the valve on the refrigerant container.

(c) Connect the center hose to the valve fitting. Turn the disc fully clockwise by hand.

(d) Turn the handle clockwise to make a hole in the sealed tap.

(e) Turn the handle fully counterclockwise to fill the center hose with gas. Do not open the high and low pressure valves.

(f) Loosen the center hose nut connected to the center fitting of the manifold gauge until a hiss can be heard. Allow air to escape for a few seconds, and then tighten the nut.

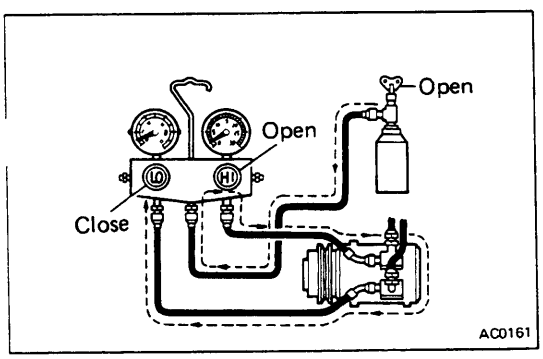

3. **TEST SYSTEM FOR LEAKS**

NOTE: After evacuating the system, check for leaks.

(a) Install the refrigerant container tap valve as described in step 2.

(b) Open the high pressure valve to charge the system with refrigerant vapor.

(c) When the low pressure gauge reads 1 kg/cm^2 (14 psi, 98 kPa), close the high pressure valve.

(d) Using a halide gas leak detector, propane torch, or electric leak detector, check the system for leaks.

If a leak is found, repair the faulty component or connection.

(e) After checking and repairing the system, perform the following:

- Turn the can tap handle fully clockwise.
- Disconnect the center hose from the can valve fitting.
- Evacuate the system for at least 15 minutes.

4. **CHARGE EMPTY SYSTEM (LIQUID)**

NOTE: This step is to charge an empty system through the high pressure side with refrigerant in a liquid state. When the refrigerant container is held upside down, refrigerant will enter the system as a liquid.

CAUTION:

- **Never run the engine when charging the system through the high pressure side.**
- **Do not open the low pressure valve when the system is being charged with liquid refrigerant.**

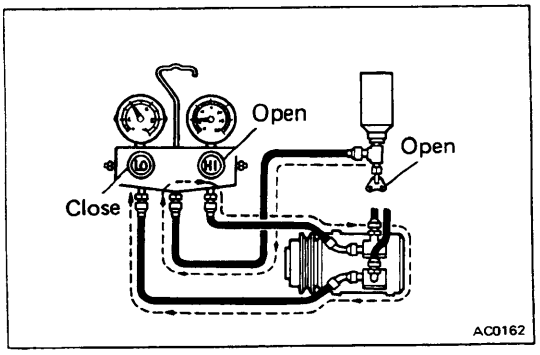

(a) Close both high and low pressure valves completely after the system is evacuated.

(b) Install the refrigerant can tap valve as described in st 2.

(c) Open the high pressure valve fully, and keep the container upside down.

(d) Charge the system with more than one container (400 g, 0.9 lb) to the specified amount. Then, close the high pressure valve.

Specified amount: 600 — 800 g (1.3 — 1.8 lb)

NOTE:
- A fully charged system is indicated by the receiver sight glass being free of any bubbles.
- If the low pressure gauge does not show a reading, the system is clogged and must be repaired.

5. CHARGE EMPTY SYSTEM OR PARTIALLY CHARGED SYSTEM (VAPOR)

NOTE:
- This step is to charge the system through the low pressure side with refrigerant in a vapor state. When the refrigerant container is placed rightside up, refrigerant will enter the system as a vapor.
- Put the refrigerant container in a pan of warm water (maximum temperature 40°C or 104°F) to keep vapor pressure in the container slightly higher than vapor pressure in the system.

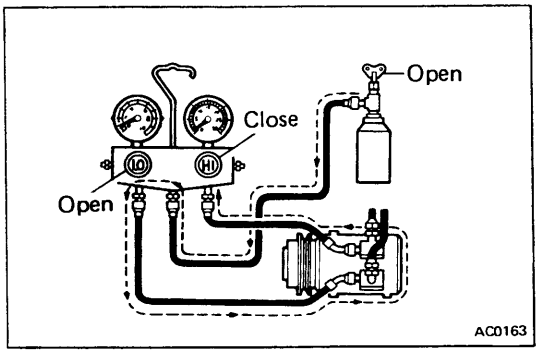

(a) Install the refrigerant container tap valve as described in step 2.

(b) Open the low pressure valve. Adjust the valve so that the low pressure gauge does not read over 4.2 kg/cm² (60 psi, 412 kPa)

(c) Run the engine at fast idle, and operate the air conditioner.

CAUTION: Be sure to keep the container in the upright position to prevent liquid refrigerant being charged into the system through the suction side, resulting in possible damage to the compressor.

(d) Charge the system with more than one container (400 g, 0.9 lb) to the specified amount. Then, close the low pressure valve.

Specified amount: 600 — 800 g (1.3 — 1.8 lb)

NOTE: A fully charged system is indicated by the receiver sight glass being free of any bubbles.

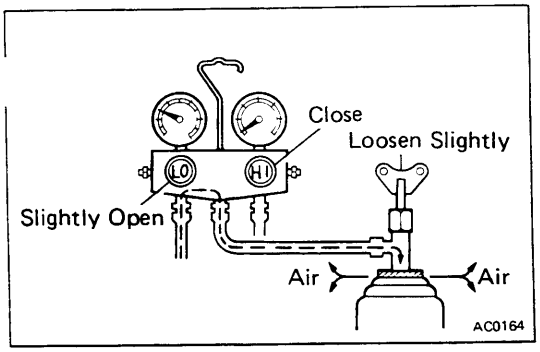

6. **IF NECESSARY, CHARGE SYSTEM WITH ANOTHER REFRIGERANT CONTAINER**
   (a) When the refrigerant container is empty, close the pressure valves.
   (b) Remove the container tap valve from the container.
   (c) Attach the container tap valve to a new refrigerant container.
   (d) Purge the air from the center hose by slightly opening the low pressure valve and loosening the valve disc.
   (e) Make a hole in the sealed tap of the new container and charge the system.

   CAUTION: Be careful not to overcharge the refrigerant as it could cause failure of the bearings and belt.

7. **WHEN SYSTEM IS FULLY CHARGED, DISCONNECT MANIFOLD GAUGE SET**
   (a) Close both low and high pressure valves.
   (b) Close the valve of the refrigerant container. If using one-pound containers of R-12, allow remaining refrigerant to escape by slowly removing the charge line.
   (c) Turn off the engine.
   (d) Using a shop rag, quickly remove both hoses from the compressor service valves.

   WARNING: Care must be taken to protect eyes and skin when removing the high pressure hoses.

   (e) Put the cap nuts on the service valve fittings.

Performance Test

1. **INSTALL MANIFOLD GAUGE SET**
   (a) Close the high pressure and low pressure hand valves.
   (b) Connect the high pressure hose to the discharge service valve of the compressor.
   (c) Connect the low pressure hose to the suction service valve of the compressor.

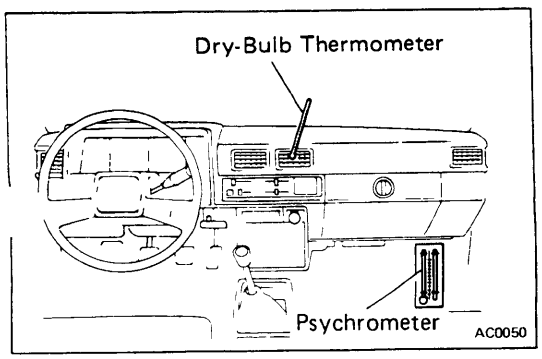

2. **RUN ENGINE AND OPERATE AIR CONDITIONER**
   (a) Run the engine at 2,000 rpm.
   (b) Set the blower switch at HI, A/C switch ON temperature control at COOL, and air flow control at VENT.
   (c) Keep all windows and doors open.

3. **POSITION THERMOMETERS**
   (a) Place a dry-bulb thermometer in the cool air outlet.
   (b) Place a psychrometer close to the inlet of the cooling unit.

4. WAIT UNTIL AIR CONDITIONING SYSTEM STABILIZES

(a) Check that the reading on the high pressure gauge 14.0 — 15.5 kg/cm² (199 — 220 psi, 1,373 — 1,520 kPa)

If the reading is too high, pour water on the condenser. If the reading is too low, cover the front of the condenser.

(b) Check that the reading on the dry-bulb thermometer at the air inlet is 25 — 35°C (77 — 95°F).

5. CHECK PERFORMANCE OF AIR CONDITIONING SYSTEM

(a) Calculate the relative humidity from the psychrometric graph by comparing the wet- and dry-bulb readings of the psychrometer at the air inlet.

HOW TO READ THE GRAPH:

After measuring the temperatures of the wet-and dry-bulb thermometers at the evaporator air inlet, relative humidity (%) can be obtained.

Example: Supposing dry- and wet-bulb temperatures at the evaporator air inlet are 25°C (77°F) and 19.5°C (67°F) respectively. The point of intersection of the dotted lines in the graph is 60%.

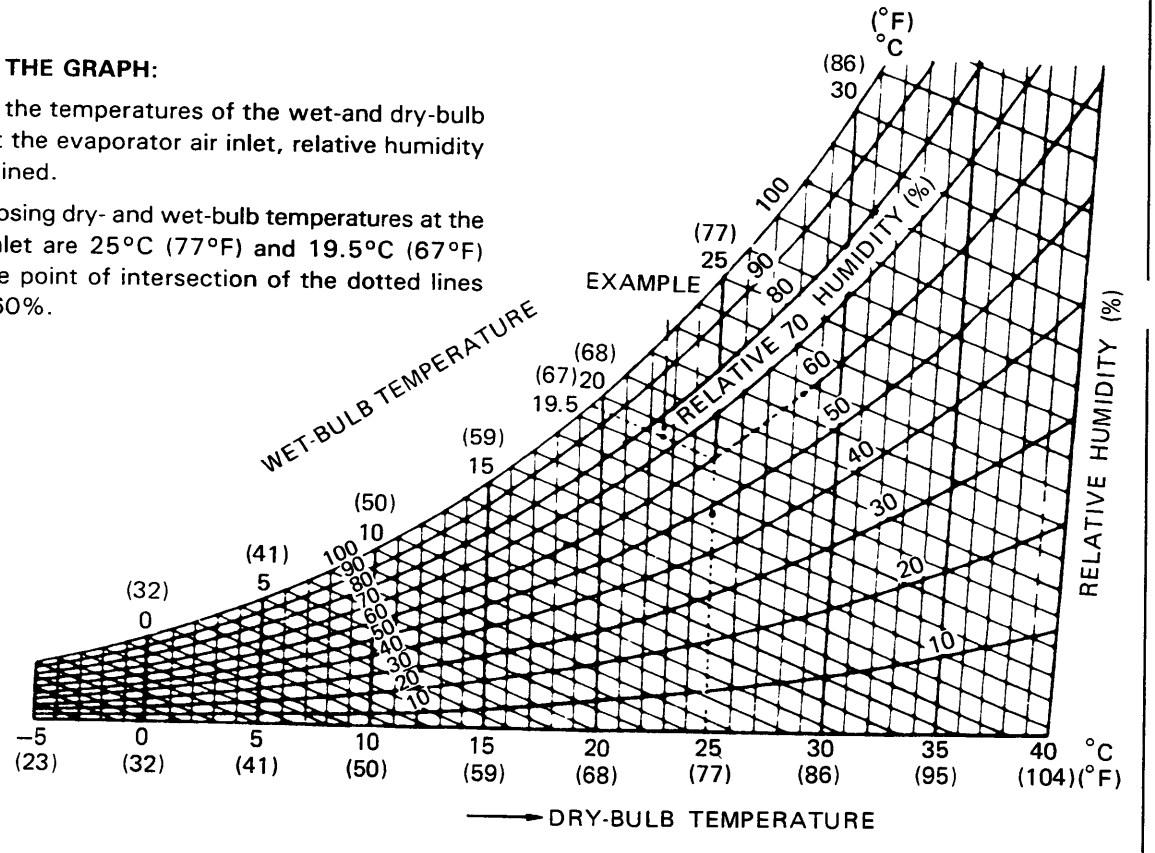

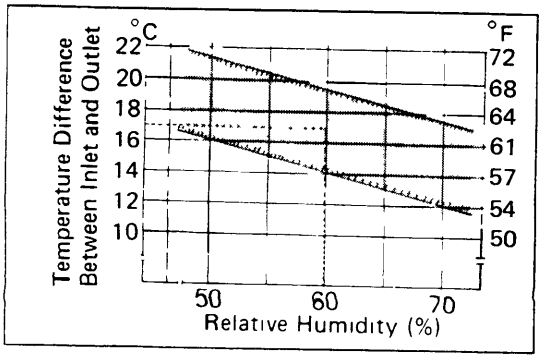

(b) Measure the dry-bulb temperature at the cool air outlet, and calculate the difference between the inlet dry-bulb and outlet dry-bulb temperatures.

(c) Check that the intersection of the relative humidity and temperature difference is between the two hatched lines.

If the intersection is within the two lines, cooling perfo mance is satisfactory.

SYSTEM COMPONENTS

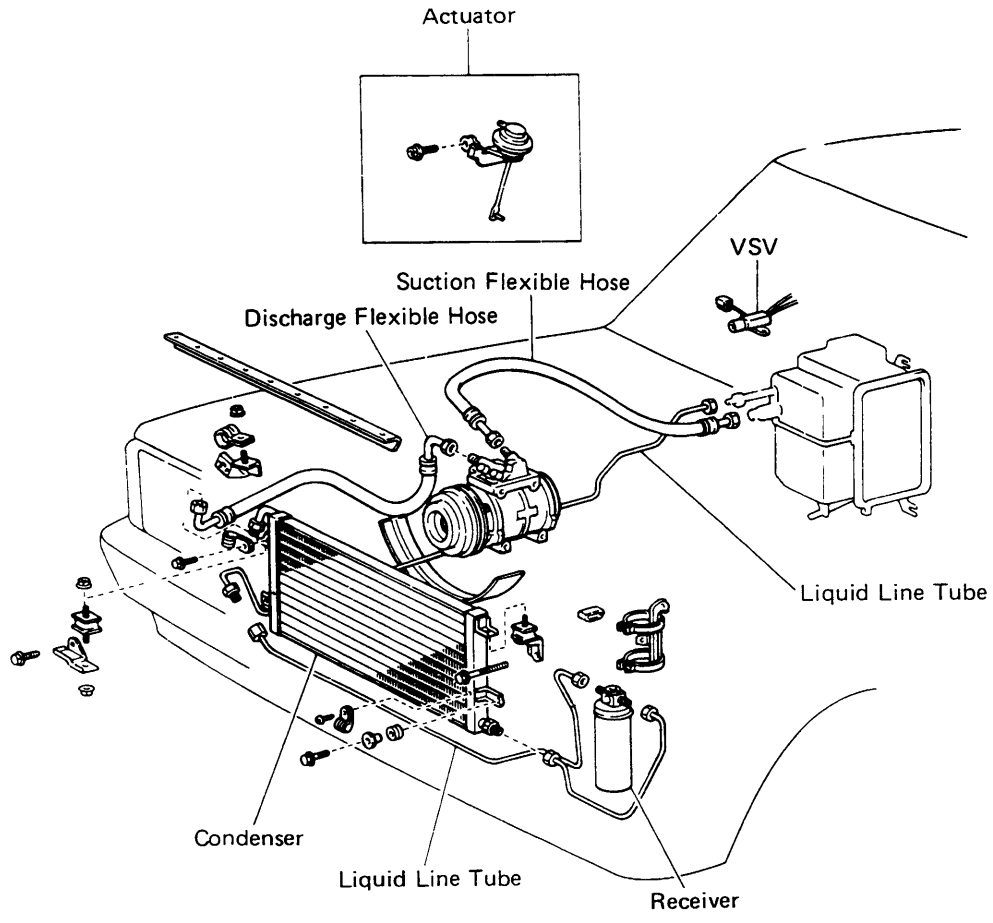

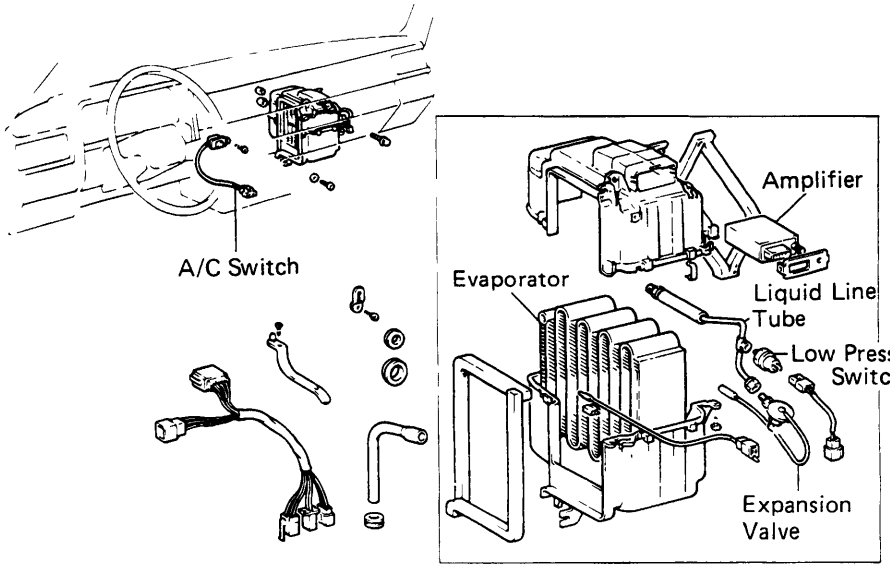

AC0051
AC0052

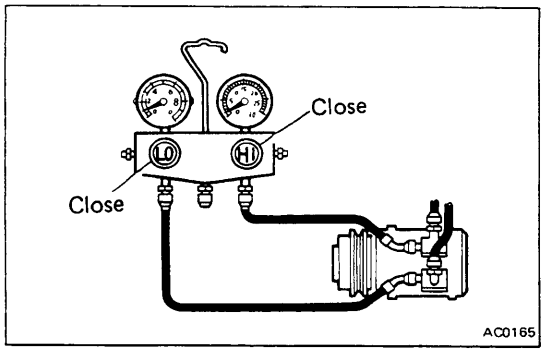

COMPRESSOR

ON-VEHICLE INSPECTION

1. INSTALL MANIFOLD GAUGE SET

(a) Close the HI and LO hand valves.

(b) Connect the high pressure hose to the discharge service valve of the compressor.

(c) Connect the low pressure hose to the suction service valve of the compressor.

2. RUN ENGINE AT FAST IDLE

3. CHECK COMPRESSOR FOR FOLLOWING:

(a) High pressure gauge reading is not low and low pressure gauge reading is not higher than normal.

(b) Metallic sound

(c) Leakage from shaft seal

If defects are found, repair the compressor.

4. CHECK MAGNETIC CLUTCH

(a) Inspect the pressure plate and the rotor for signs of oil.

(b) Check the clutch bearings for noise and grease leakage.

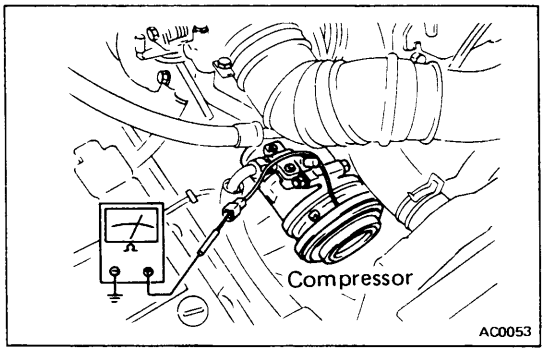

(c) Using an ohmmeter, measure the resistance of the stator coil between the clutch lead wire and ground.

If the resistance is not within tolerance, replace the coil.

Standard resistance: 3.7 ± 0.2 Ω at 20°C (68°F)

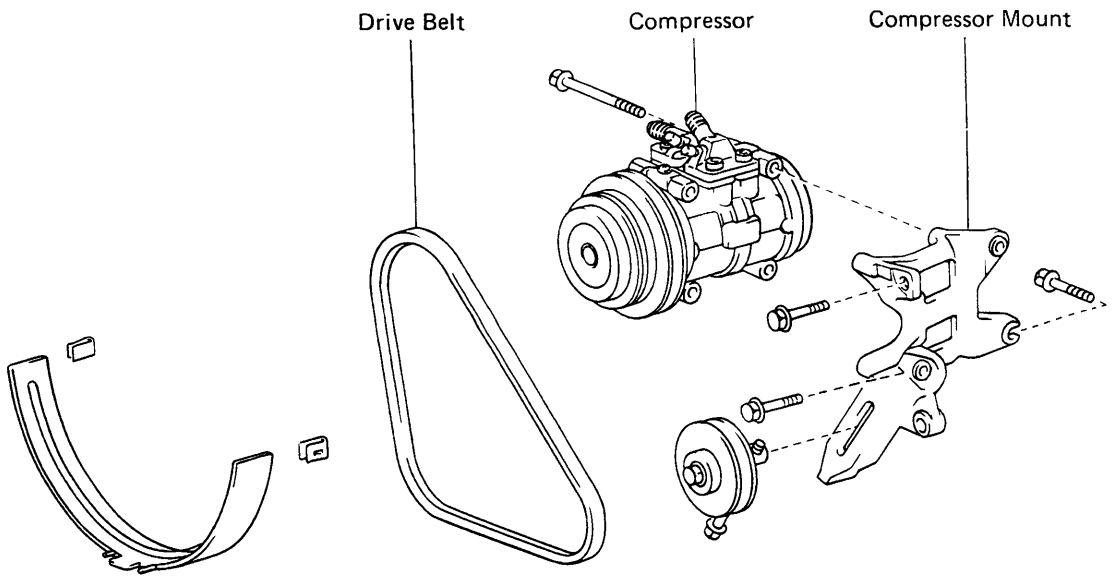

REMOVAL OF COMPRESSOR

1. **RUN ENGINE AT IDLE FOR 10 MINUTES WITH AIR CONDITIONING ON**
2. **DISCONNECT NEGATIVE CABLE FROM BATTERY**
3. **DISCONNECT CLUTCH LEAD WIRE FROM WIRING HARNESS**
4. **DISCHARGE REFRIGERANT FROM REFRIGERATION SYSTEM (See page AC-14)**
5. **DISCONNECT TWO FLEXIBLE HOSES FROM COMPRESSOR SERVICE VALVES**

   Cap the open fitting immediately to keep moisture out of the system.

6. **REMOVE COMPRESSOR**
   (a) Remove the fan shroud.
   (b) Loosen the drive belt.
   (c) Remove the compressor mounting bolts and the compressor.

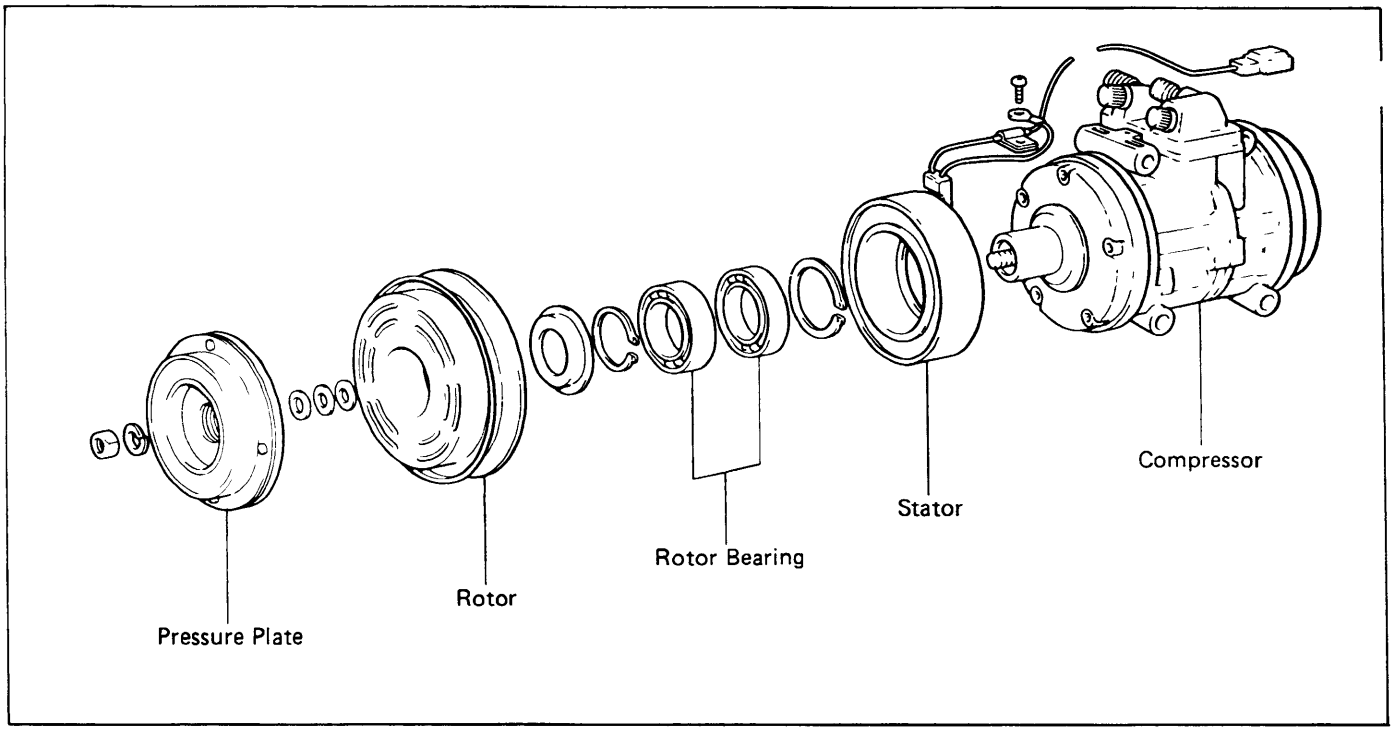

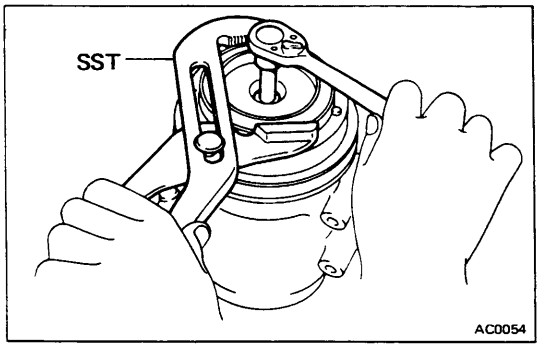

DISASSEMBLY OF MAGNETIC CLUTCH

1. REMOVE PRESSURE PLATE

(a) Using SST and a socket, remove the shaft nut.
SST 07110-77011

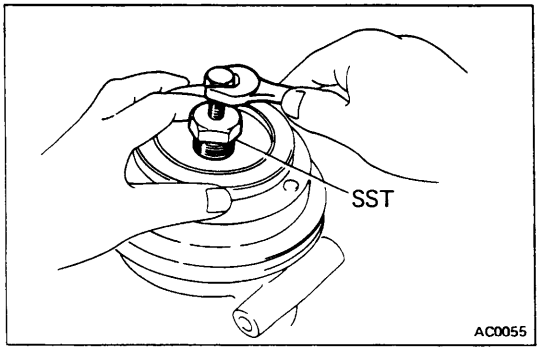

(b) Using SST and socket, remove the pressure plate.
SST 07112-71010

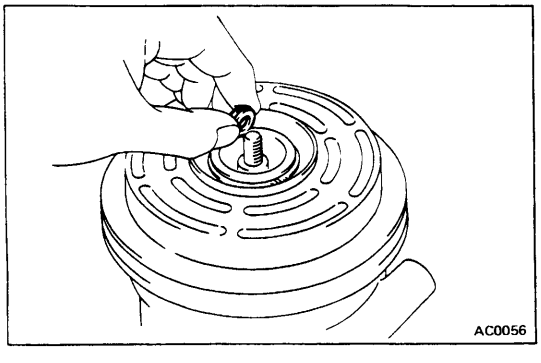

(c) Remove the shims from the shaft.

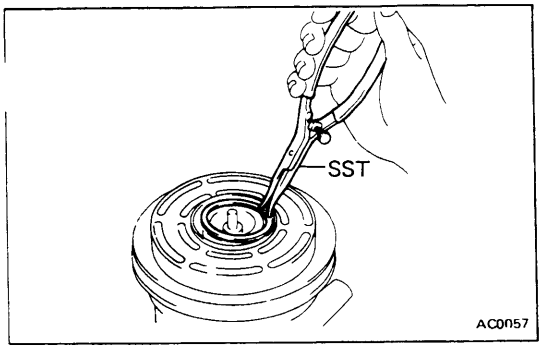

2. **REMOVE ROTOR**

(a) Using SST, remove the snap ring.

SST 07114-84020

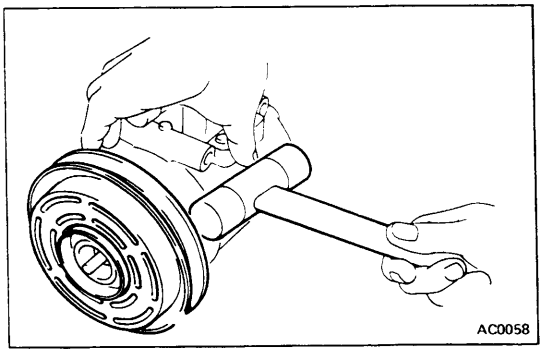

(b) Using a plastic hammer, tap the rotor off the shaft.

CAUTION: Be careful not to damage the pulley when tapping the rotor.

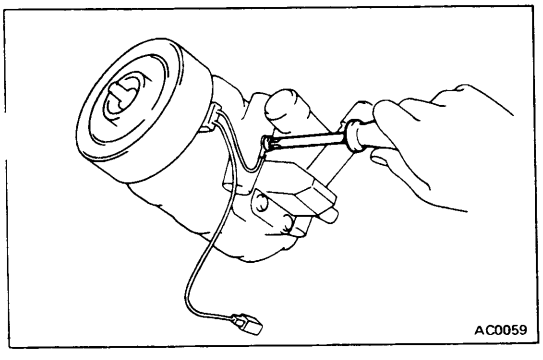

3. **REMOVE STATOR**

(a) Disconnect the stator lead wires from the compressor housing.

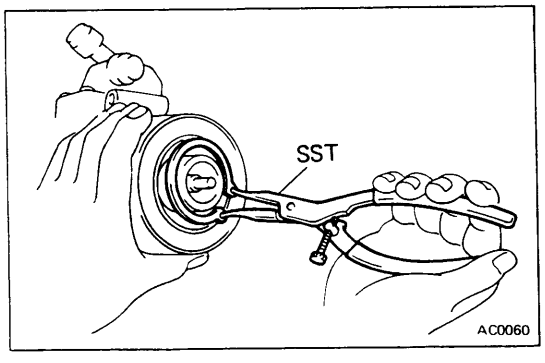

(b) Using SST, remove the snap ring. Remove the stator.

SST 07114-84020

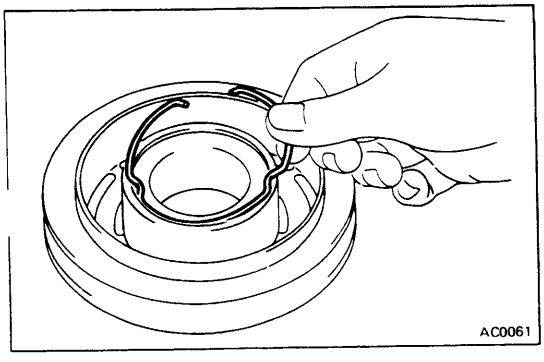

4. **REMOVE ROTOR BEARINGS**

NOTE: Press the bearings out only if they are to be replaced.

(a) Remove the bearing snap ring from the rotor.

(b) Using SST, press out two bearings.

SST 07110-77011

5. **INSPECT PRESSURE PLATE AND ROTOR**

(a) Inspect the pressure plate and rotor surfaces for wear and scoring. Replace if necessary.

(b) Check the rotor bearings for wear and leakage of grease. Replace if necessary.

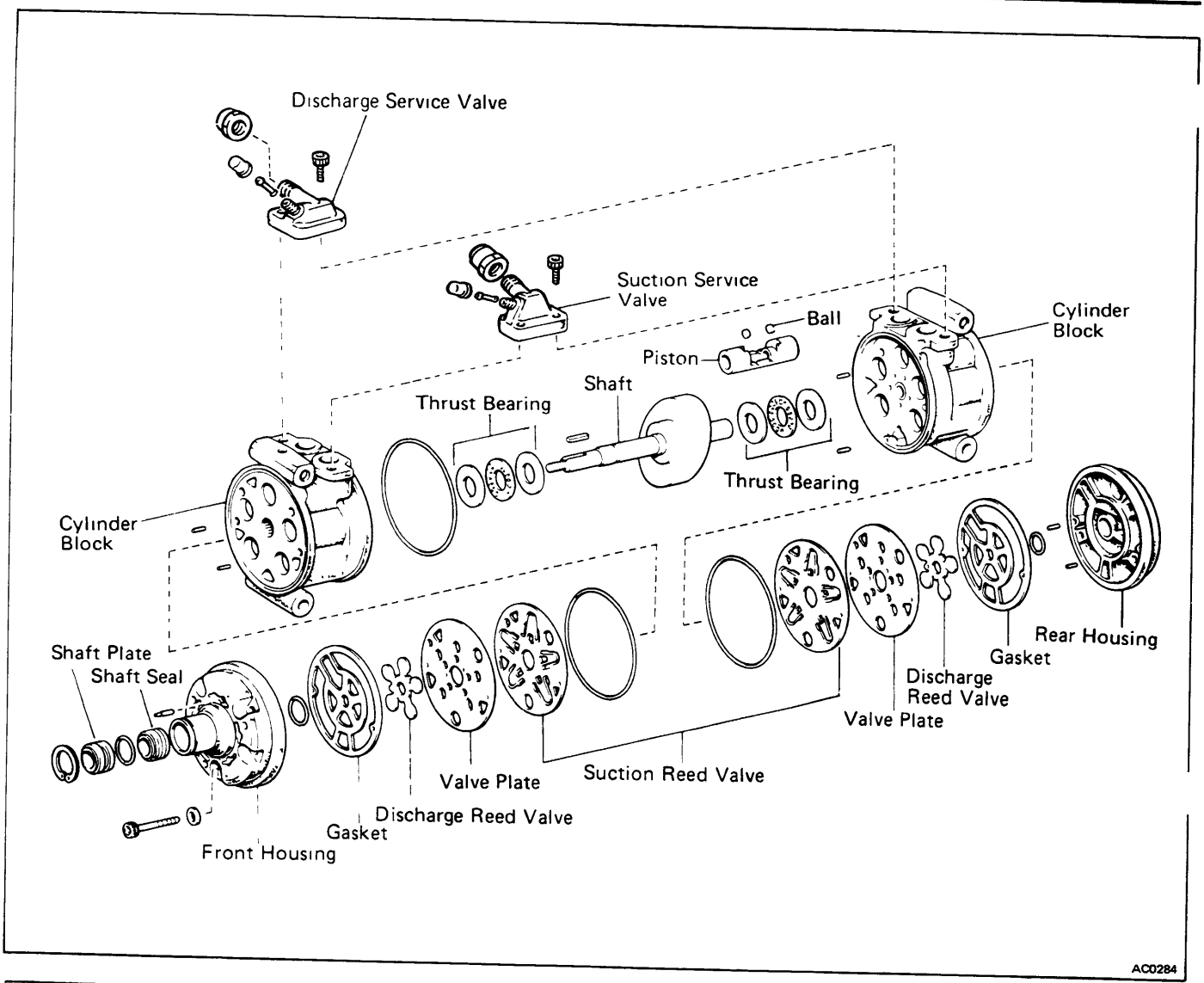

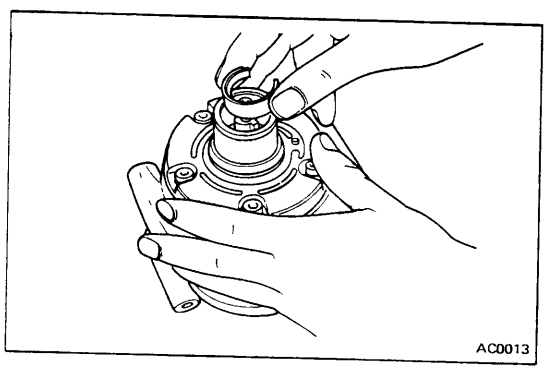

DISASSEMBLY OF COMPRESSOR

1. REMOVE FELT

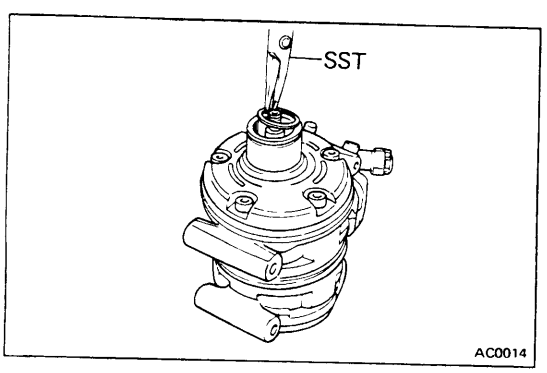

2. REMOVE CIRCLIP

Using SST, remove the circlip.

SST 07714-84020

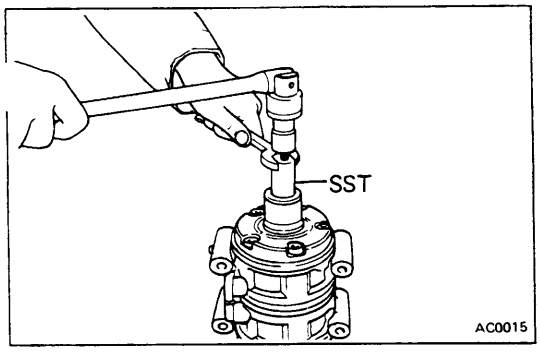

3. REMOVE KEY

Remove the key from the shaft.

SST 07112-45021

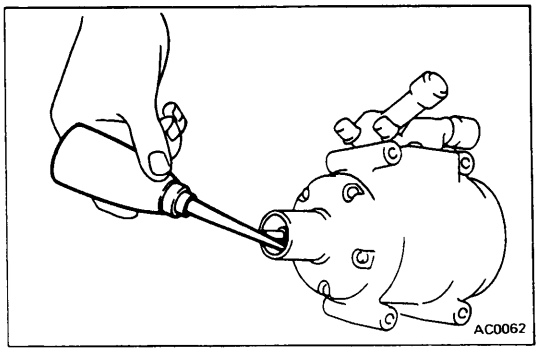

4. APPLY COMPRESSOR OIL TO INNER BORE

Apply compressor oil to the inner bore of the compressor.

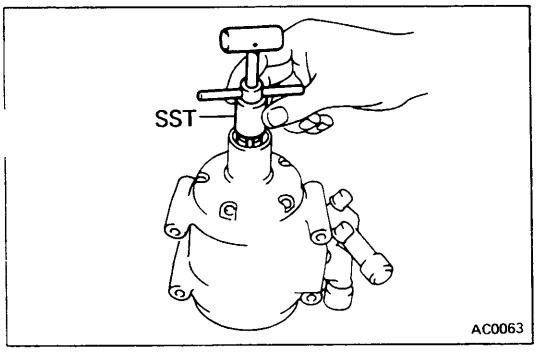

5. REMOVE SHAFT PLATE

(a) Insert SST against the shaft. Then push the holder ring downward.

SST 07112-15010

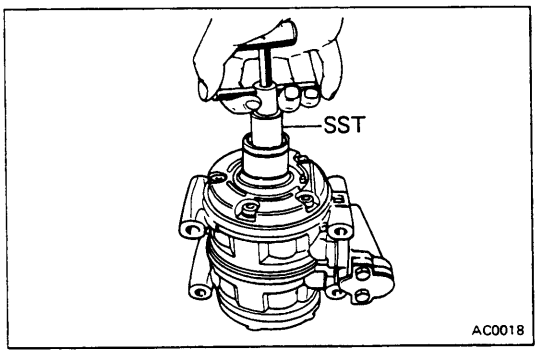

(b) Pull up the remover bar, and remove the shaft plate.

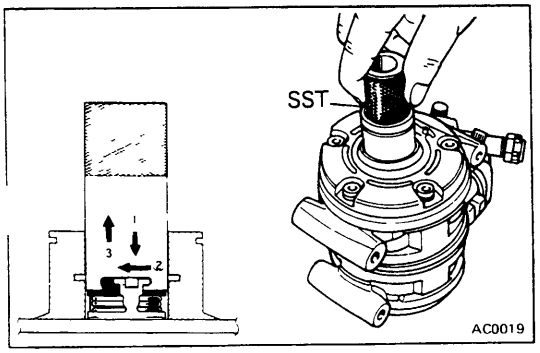

6. REMOVE SHAFT SEAL

Insert SST against the shaft, and turn it to the right while pressing on the remover.

Then remove the shaft seal.

SST 07114-15010

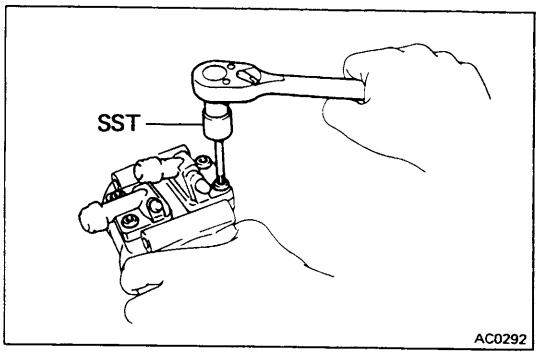

7. REMOVE SERVICE VALVE

(a) Using SST, remove the bolts holding the service valve.

SST 07110-61050

(b) Remove the O-rings from the service valves and discard them.

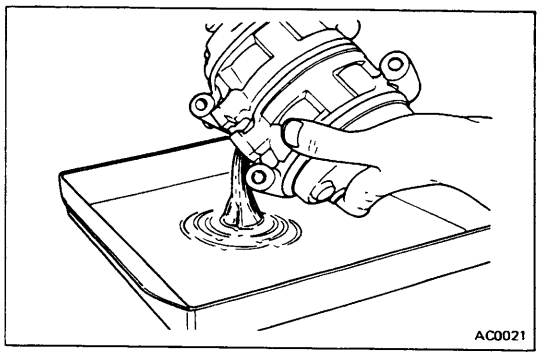

8. DRAIN OIL INTO CONTAINER

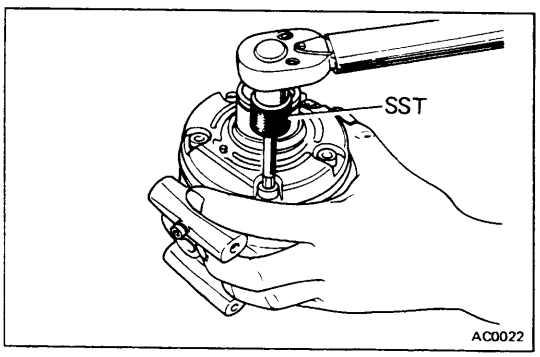

9. REMOVE FRONT HOUSING

(a) Using SST, remove the six through bolts.

NOTE: Do not reuse the six washers.

SST 07110-61050

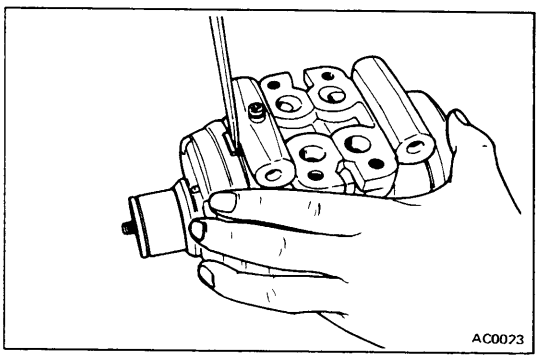

(b) Using a hammer and punch, remove the front housing by tapping on the protrusion.

CAUTION: Be careful not to scratch the sealing surface of the front housing.

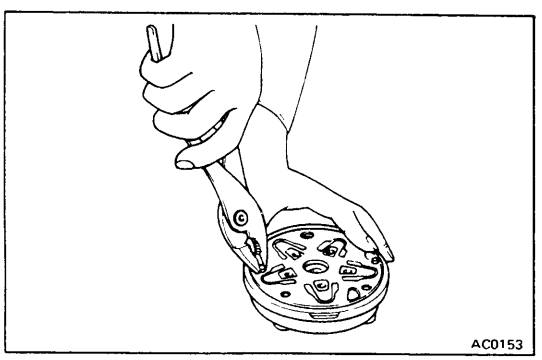

10. REMOVE FRONT VALVE PLATE

Remove the two pins from the front housing. Discard the pins.

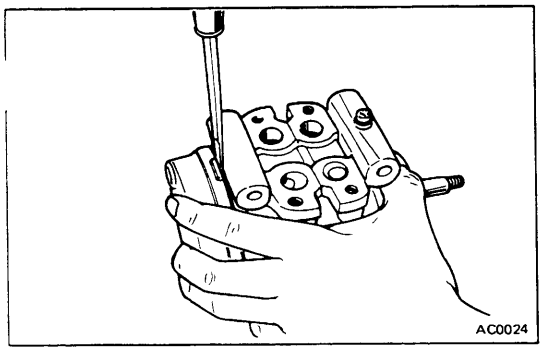

11. REMOVE REAR HOUSING

Using a hammer and punch, remove the rear housing by tapping on the protrusion.

CAUTION: Be careful not to scratch the sealing surface of the rear housing.

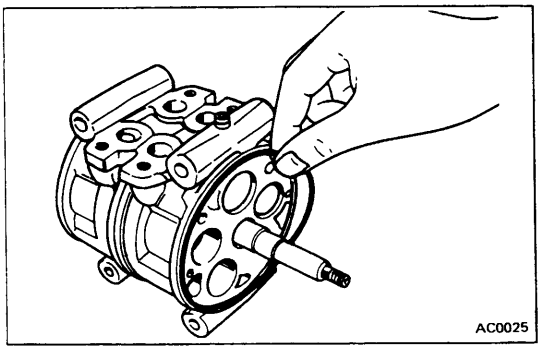

12. REMOVE FRONT AND REAR O-RINGS FROM CYLINDER BLOCK

Discard the O-rings.

ASSEMBLY OF COMPRESSOR

(See page AC-24)

1. INSTALL REAR VALVE PLATE ON REAR CYLINDER

(a) Install the two pins in the rear cylinder.

(b) Lubricate a new O-ring with compressor oil. Install the O-ring in the rear cylinder.

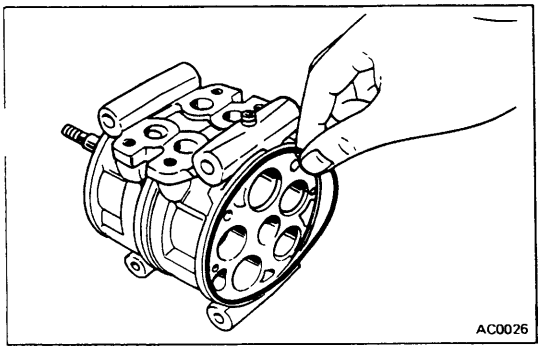

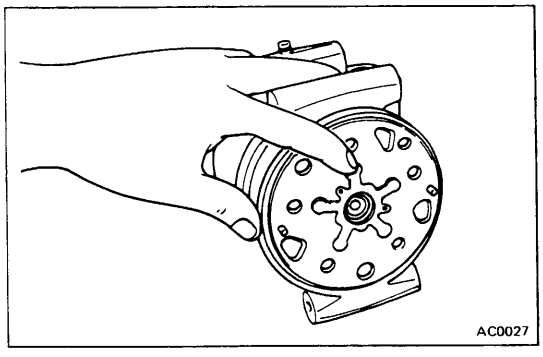

(c) Install the rear suction valve over the pins on the rear cylinder.

NOTE: The front and rear suction valves are identical.

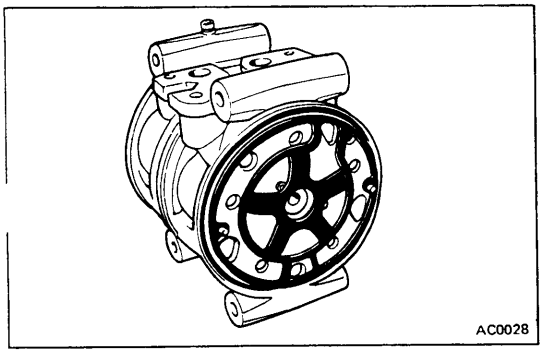

(d) Install the rear valve plate together with the discharge valve over the pins on rear cylinder.

NOTE: The rear valve plate is marked with an "R".

(e) Lubricate the gasket with compressor oil. Install the gasket on the valve plate.

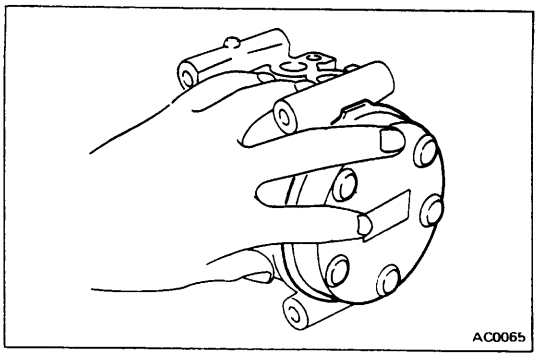

2. INSTALL REAR HOUSING ON REAR CYLINDER

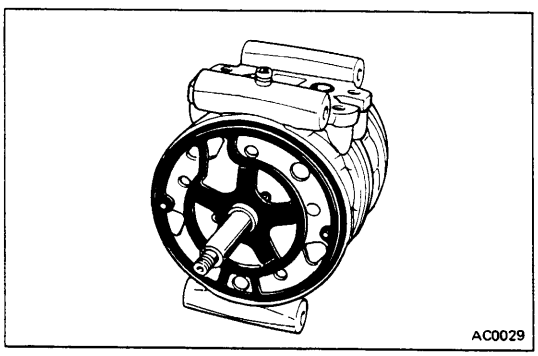

3. INSTALL FRONT VALVE PLATE ON FRONT CYLINDER

(a) Install the two pins in the front cylinder.

(b) Lubricate a new O-ring with compressor oil. Install the O-ring in the rear housing.

(c) Install the front suction valve over the pins on the front cylinder.

(d) Install the front valve plate together with the discharge valve over the pins on the front cylinder.

NOTE: The front valve plate is marked with an"R".

(e) Lubricate the gasket with compressor oil. Install the gasket on the valve plate.

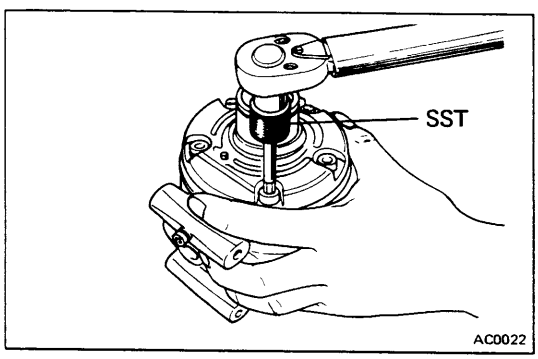

4. INSTALL FRONT HOUSING ON FRONT CYLINDER AND TIGHTEN SIX THROUGH BOLTS

Using a torque wrench and SST, gradually tighten the s. through bolts in two or three passes.

SST 07110-61050

Torque: 260 kg-cm (19 ft-lb, 25 N·m)

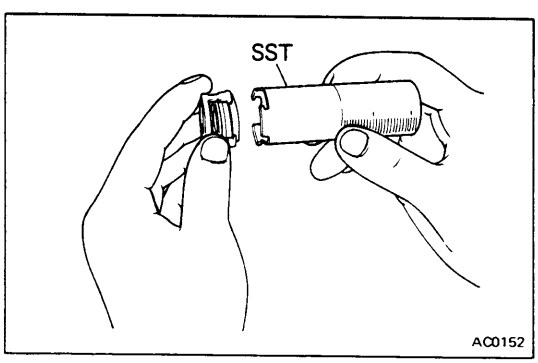

5. INSTALL SHAFT SEAL

(a) Fit the shaft seal onto SST.

SST 07114-15010

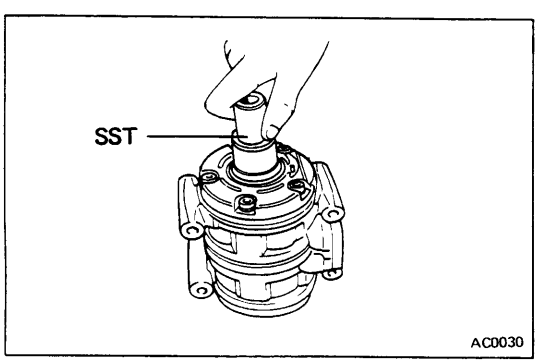

(b) Apply oil to the bore.

Insert SST, and turn it counterclockwise while lightly pressing in.
Then pull up the SST.

SST 07114-15010

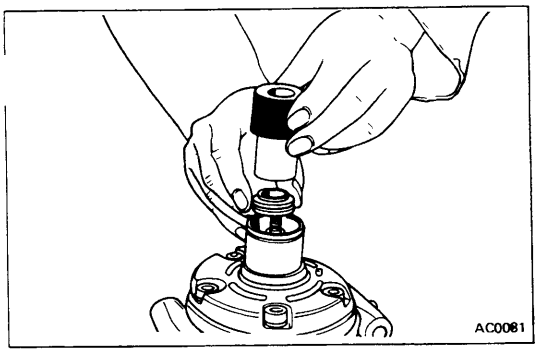

6. INSTALL SHAFT PLATE

(a) Put in the shaft plate.

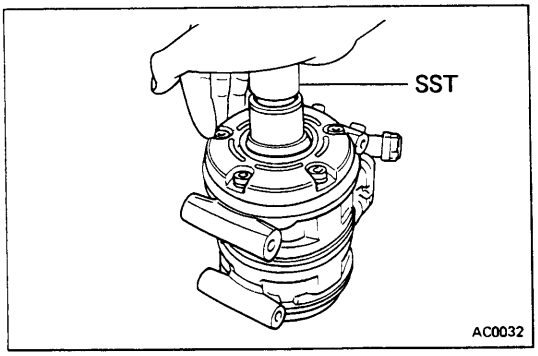

(b) Press in SST.

SST 07112-25010

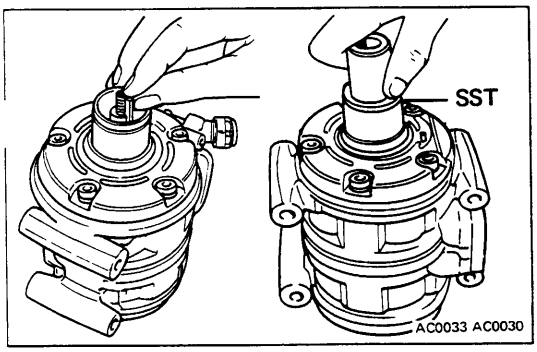

7. INSTALL KEY IN SHAFT GROOVE

Using a plastic hammer and SST, tap the key lightly.

SST 07114-45010

Place the felt inside the bore.
(See page AC-24)

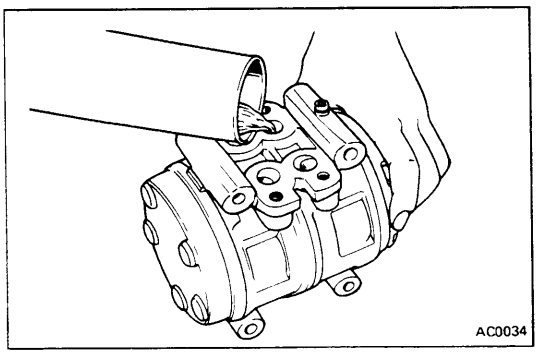

8. POUR COMPRESSOR OIL INTO COMPRESSOR

Compressor oil: DENSOOIL 6, SUNISO No.5 GS or equivalent

Compressor oil capacity: 60 — 100 cc (2.0 — 3.4 oz)

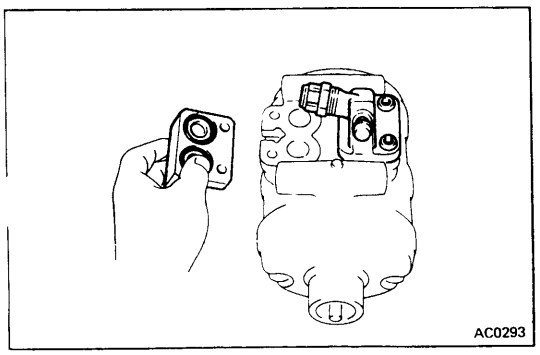

9. INSTALL SERVICE VALVES

(a) Lubricate new O-rings with compressor oil. Install the O-rings in the service valves.

(b) Install the service valves on the compressor. Using a torque wrench and SST, tighten the bolts.

Torque: 260 kg-cm (19 ft-lb, 25 N·m)

SST 07110-61050

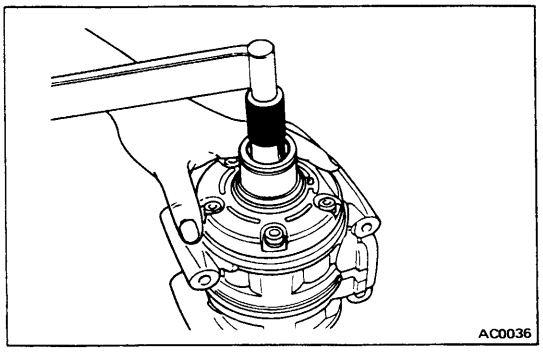

10. CHECK SHAFT ROTATING TORQUE

Torque: 30 kg-cm (26 in.-lb, 2.9 N·m)

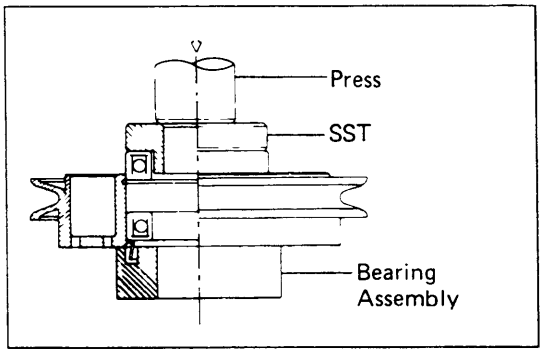

ASSEMBLY OF MAGNETIC CLUTCH

(See page AC-22)

1. INSTALL TWO BEARINGS IN ROTOR

(a) Using SST, press a shield ring and two new bearings into the rotor boss until they are fully seated.

SST 07110-77011

(b) Install the bearing snap ring into the rotor groove.

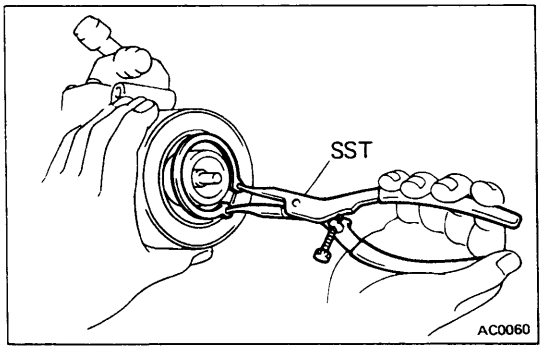

2. INSTALL STATOR

(a) Install the stator on the compressor.

(b) Using SST, install the snap ring.

SST 07110-77011

(c) Connect the stator lead wires to the compressor housing.

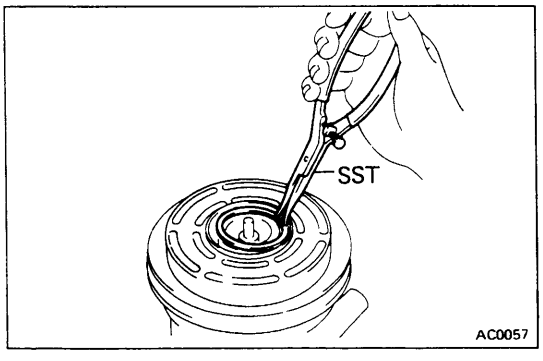

3. INSTALL ROTOR

(a) Install the rotor on the compressor shaft.

(b) Using SST, install the snap ring.

SST 07110-77011

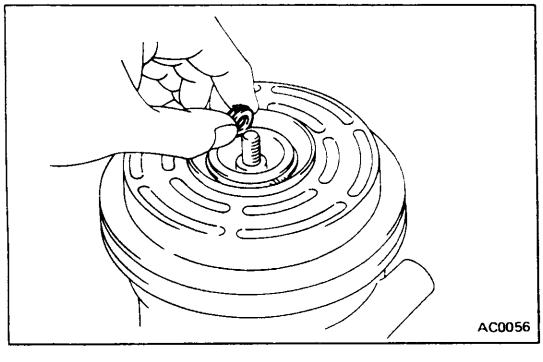

4. INSTALL PRESSURE PLATE

(a) Adjust the clearance between the pressure plate and rotor by putting shims on the compressor shaft.

Standard clearance: 0.8±0.2 mm (0.032±0.008 in.)

If the clearance is not within tolerance, add or reduce tl number of shims to obtain the standard clearance.

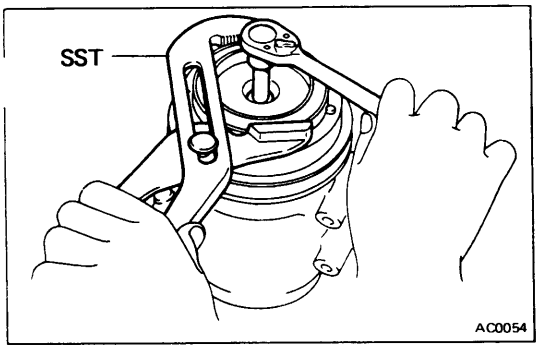

(b) Using a torque wrench and SST, install the shaft nut.

Torque: 165 kg-cm (12 ft-lb, 16 N·m)

SST 07110-77011

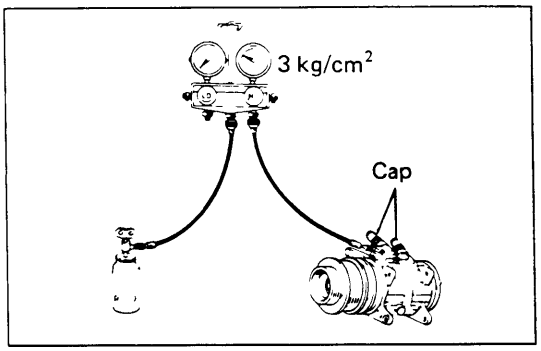

PERFORMANCE TEST OF COMPRESSOR

1. PERFORM GAS LEAKAGE TEST

(a) Put cap on service valve.

(b) Charge the compressor with refrigerant through the charge valve until the pressure is 3 kg/cm² (43 psi, 294 kPa).

(c) Using gas leak detector, check the compressor for leaks.

If leaks are found, check and replace the gasket, O-ring, or shaft seal.

2. FILL COMPRESSOR WITH CLEAN COMPRESSOR OIL

Remove the service valve and drain the compressor oil. Fill with new oil.

Compressor oil: DENSOOIL 6, SUNISO No.5 GS or equivalent

Compressor capacity: 60 — 100 cc (2.0 — 3.4 oz)

3. EVACUATE COMPRESSOR AND CHARGE WITH REFRIGERANT (See page AC-11)

Make sure the caps are tight and free from moisture and contamination.

NOTE: When storing a compressor for an extended period, charge the compressor with refrigerant or dry nitrogen gas to prevent corrosion.

INSTALLATION OF COMPRESSOR

(See page AC-21)

1. INSTALL COMPRESSOR WITH THREE MOUNTING BOLTS

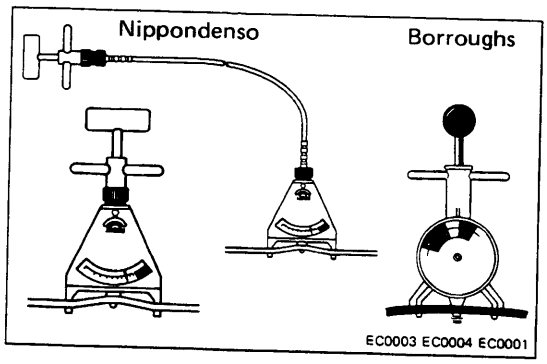

2. INSTALL DRIVE BELT

3. CHECK DRIVE BELT TENSION

Using a belt tension gauge, check the drive belt tension.

Belt tension gauge:

Nippondenso BTG-20 (95506-00020) or
Borroughs No. BT-33-73F

Drive belt tension:

New belt 125±25 lb
Used belt 80±20 lb

NOTE:

- "New belt" refers to a brand new belt which has never before been used.
- "Used belt" refers to a belt which has been used on a running engine for 5 minutes or more.

4. CONNECT TWO FLEXIBLE HOSES TO COMPRESSOR SERVICE VALVES

Torque: Discharge line 225 kg-cm (16 ft-lb, 22 N·m)
Suction line 325 kg-cm (24 ft-lb, 32 N·m)

5. CONNECT CLUTCH LEAD WIRE TO WIRING HARNESS

6. CONNECT NEGATIVE CABLE TO BATTERY

7. EVACUATE AND CHARGE REFRIGERATION SYSTEM (See page AC-14)

CONDENSER

ON-VEHICLE INSPECTION

1. **CHECK CONDENSER FINS FOR BLOCKAGE OR DAMAGE**

   If the fins are clogged, wash them with water and dry with compressed air.

   CAUTION: Be careful not to damage the fins.

   If the fins are bent, straighten them with a screwdriver or pliers.

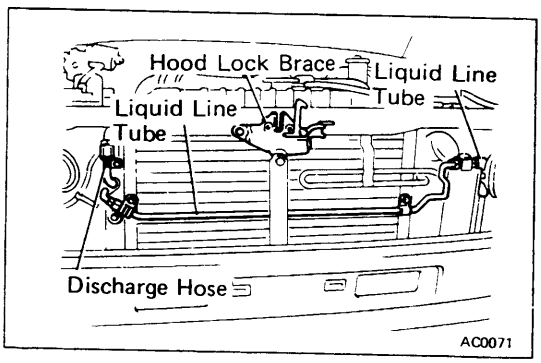

2. **CHECK CONDENSER FITTINGS FOR LEAKAGE**

   Repair as necessary.

REMOVAL OF CONDENSER

(See page AC-19)

1. **DISCHARGE REFRIGERATION SYSTEM**
   (See page AC-14)

2. **REMOVE FRONT GRILLE AND HOOD LOCK BRACE**

3. **DISCONNECT DISCHARGE FLEXIBLE HOSE FROM CONDENSER INLET FITTING**

4. **DISCONNECT LIQUID LINE TUBE FROM RECEIVER OUTLET FITTING**

   NOTE: Cap the open fittings immediately to keep moisture out of the system.

5. **REMOVE CONDENSER**

   Remove the four bolts.

INSTALLATION OF CONDENSER

(See page AC-19)

1. **INSTALL CONDENSER**

   Install the four bolts and nuts, making sure the rubber cushions fit on the mounting flanges correctly.

2. **CONNECT LIQUID LINE TUBE TO RECEIVER AND DISCHARGE FLEXIBLE HOSE TO CONDENSER**

   Torque:

Liquid line tube	**135 kg-cm (10 ft-lb, 13 N·m)**
Discharge flexible hose	**225 kg-cm (16 ft-lb, 22 N·m)**

3. **INSTALL FRONT GRILLE AND HOOD LOCK BRACE**

4. **IF CONDENSER IS REPLACED, ADD COMPRESSOR OIL TO COMPRESSOR**

   Add 40—50 cc (1.4—1.7 oz)

5. **EVACUATE, CHARGE AND TEST REFRIGERATION SYSTEM (See page AC-14)**

RECEIVER

ON-VEHICLE INSPECTION

CHECK SIGHT GLASS, FUSIBLE PLUG AND FITTINGS FOR LEAKAGE

Use a gas leak tester. Repair as necessary.

REMOVAL OF RECEIVER

(See page AC-19)

1. **DISCHARGE REFRIGERATION SYSTEM (See page AC-14)**

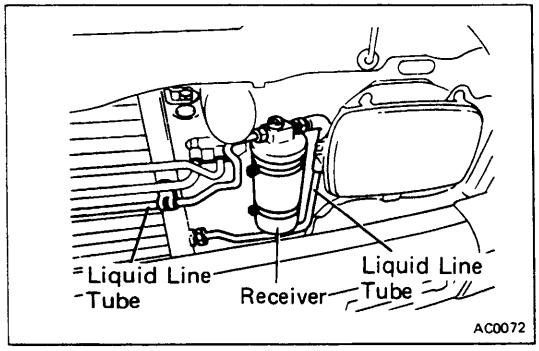

2. **DISCONNECT TWO LIQUID LINE TUBES FROM RECEIVER**

   NOTE: Cap the open fittings immediately to keep moisture out of the system.

3. **REMOVE RECEIVER FROM RECEIVER HOLDER**

INSTALLATION OF RECEIVER

(See page AC-19)

1. **INSTALL RECEIVER IN RECEIVER HOLDER**

   NOTE: Do not remove the caps until ready for connection.

2. **CONNECT TWO LIQUID LINE TUBES TO RECEIVER**

   Torque: 135 kg-cm (10 ft-lb, 13 N·m)

3. **IF RECEIVER WAS REPLACED, ADD COMPRESSOR OIL TO COMPRESSOR**

   Add 20 cc (0.7 oz)

4. **EVACUATE, CHARGE AND TEST REFRIGERATION SYSTEM (See page AC-14)**

COOLING UNIT

ON-VEHICLE INSPECTION OF EXPANSION VALVE

1. **CONNECT MANIFOLD GAUGE TO COMPRESSOR**

2. **CHECK EXPANSION VALVE OPERATION**

   (a) Run the engine at fast idle with the air conditioning on.

   (b) Check that the low pressure reading is between 0.5—5.0 kg/cm² (7 — 71 psi, 49 — 490 kPa).

   If the reading is too low, check and replace the expansion valve and/or receiver.

   If the reading is too high, tighten the remote bulb holders and/or replace the expansion valve.

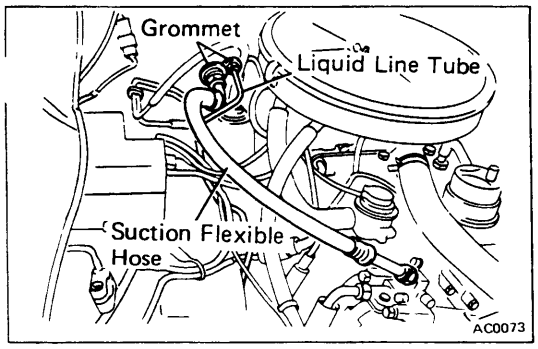

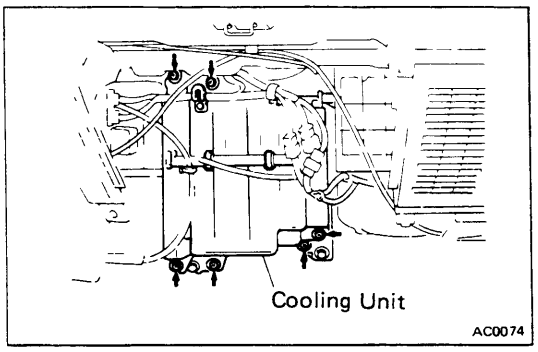

REMOVAL OF COOLING UNIT

1. **DISCONNECT NEGATIVE CABLE FROM BATTERY**
2. **DISCHARGE REFRIGERATION SYSTEM**
   (See page AC-14)
3. **DISCONNECT SUCTION FLEXIBLE HOSE FROM COOLING UNIT OUTLET FITTING**
4. **DISCONNECT LIQUID LINE TUBE FROM COOLING UNIT INLET FITTING**

   NOTE: Cap the open fittings immediately to keep moisture out of the system.
5. **REMOVE GROMMETS FROM INLET AND OUTLET FITTINGS**
6. **REMOVE FOLLOWING COMPONENTS:**
   (a) Glove box
   (b) Glove box stay
7. **DISCONNECT FOLLOWING CONNECTORS:**
   (a) A/C switch connector
   (b) Connector connected to vehicle wire harness
8. **REMOVE COOLING UNIT**

   Remove the four tapping screws and the bolt.
9. **REMOVE A/C WIRE HARNESS FROM COOLING UNIT**

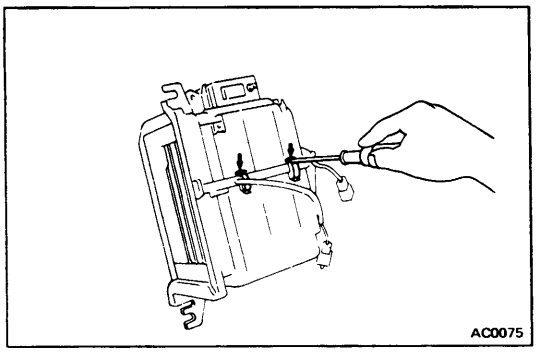

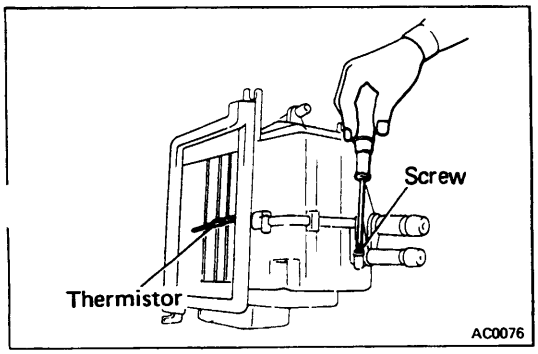

DISASSEMBLY OF COOLING UNIT

(See page AC-19)

1. **REMOVE LOWER AND UPPER CASE FROM EVAPORATOR**
   (a) Using a screwdriver, remove the four clamps, and four screws.
   (b) Remove the two packings.
2. **REMOVE THERMISTOR**

   Pull off the clamp.

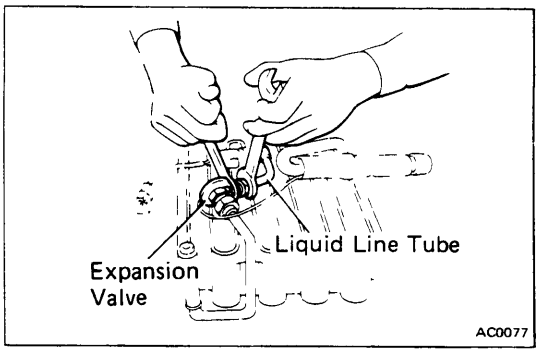

3. **REMOVE COMPONENTS FROM EVAPORATOR**
   (a) Remove the heat insulator and the clamp from the outlet tube.
   (b) Disconnect the liquid line tube from inlet fitting of the expansion valve.
   (c) Disconnect the expansion valve from the inlet fitting of the evaporator.
   (d) Remove the pressure switch, if necessary.

Evaporator

INSPECTION OF EVAPORATOR

1. **CHECK EVAPORATOR FINS FOR BLOCKAGE**
   If the fins are clogged, clean them with compressed air.
   CAUTION: Never use water to clean the evaporator.

2. **CHECK FITTINGS FOR CRACKS OR SCRATCHES**
   Repair as necessary.

Expansion Valve

INSPECTION OF EXPANSION VALVE

1. **CONNECT MANIFOLD GAUGE**
   Connect the manifold gauge set to the expansion valve, testing nozzle (SST) and refrigerant container as shown
   SST 07115-71010

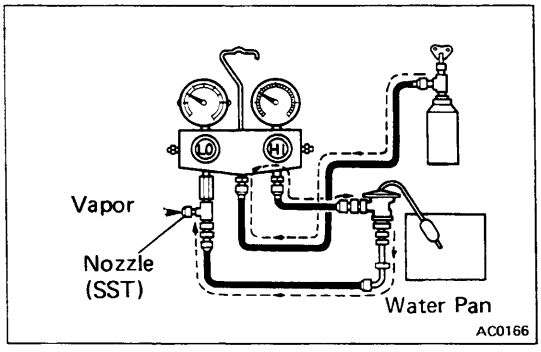

2. **CHECK EXPANSION VALVE**
   (a) Close both manifold gauge hand valves.
   (b) Pierce the refrigerant container to release the pressure.
   (c) Open the high pressure hand valve and adjust the high side pressure to approximately 5 kg/cm² (71 psi, 490 kPa).
   (d) Dip the heat sensing tube of the expansion valve in a pan of water. While varying the temperature of the water, read the low pressure gauge and, at the same time, measure the temperature of the water with a thermo meter.
   (e) Compare the two readings on the chart.

   If the intersection is not between the two lines, replace the expansion valve.

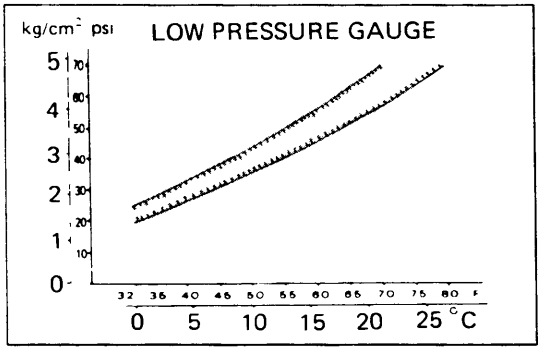

Thermistor

INSPECTION OF THERMISTOR

CHECK THERMISTOR OPERATION

(a) Place the thermistor in cold water. While varying the temperature of the water, measure the resistance at the connector and, at the same time, measure temperature of the water with a thermo meter.
(b) Compare the two readings on the chart.

If the intersection is not between the two lines, replace the thermistor.

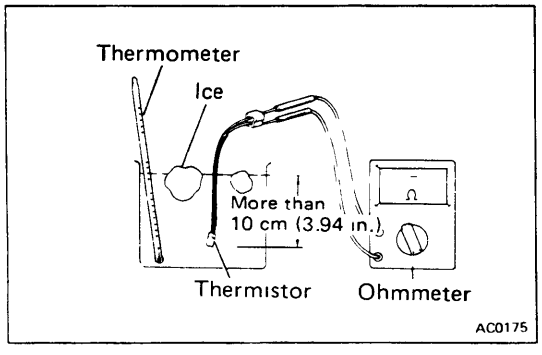

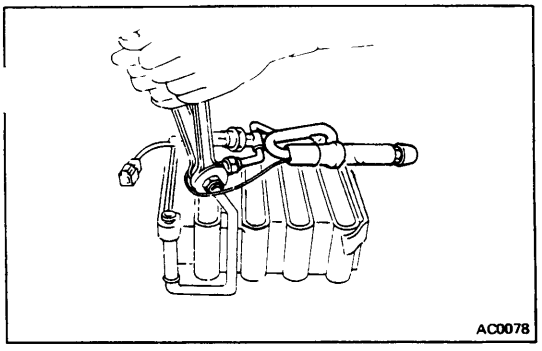
AC0078

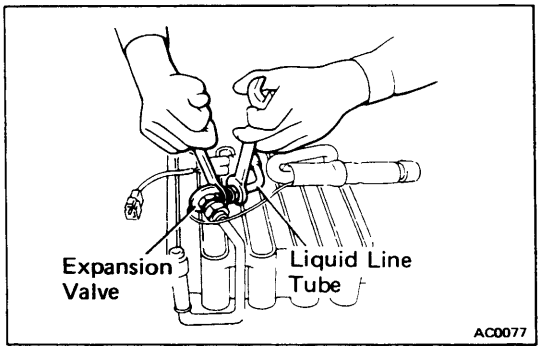

AC0077

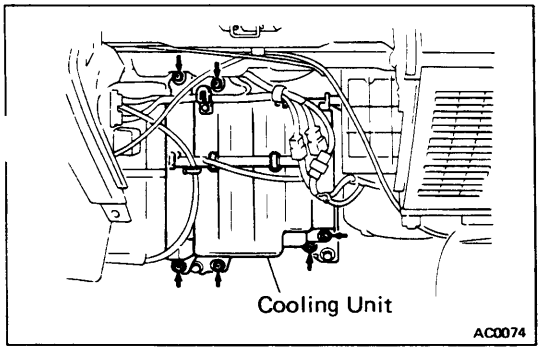

AC0074

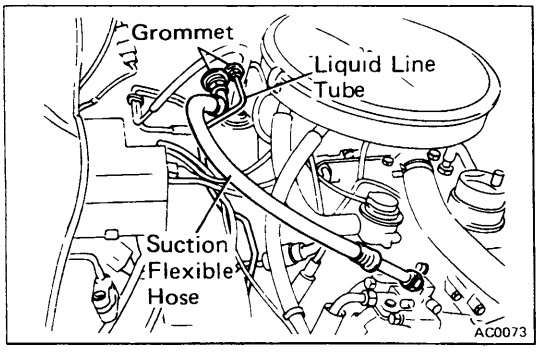

AC0073

ASSEMBLY OF COOLING UNIT

(See page AC-19)

1. **INSTALL COMPONENTS ON EVAPORATOR**

   (a) Connect the expansion valve to the inlet fitting of the evaporator. Torque the nut.

   Torque: 235 kg-cm (17 ft-lb, 23 N·m)

   NOTE: Be sure that the O-ring is positioned on the tube fitting.

   (b) Connect the liquid line tube to the inlet fitting of the expansion valve. Torque the nut.

   Torque: 135 kg-cm (10 ft-lb, 13 N·m)

   (c) Install the pressure switch, if removed.

   Torque: 135 kg-cm (10 ft-lb, 13 N·m)

   (d) Install the clamp and heat insulator to the outlet tube.

2. **INSTALL THERMISTOR ON EVAPORATOR**

3. **INSTALL UPPER AND LOWER CASES ON EVAPORATOR**

INSTALLATION OF COOLING UNIT

1. **INSTALL A/C WIRE HARNESS TO COOLING UNIT**

2. **INSTALL COOLING UNIT**

   Install the cooling unit with the four tapping screws and the bolt.

   CAUTION: Be careful not to pinch the wire harness while installing the cooling unit.

3. **INSTALL GLOVE BOX**

4. **INSTALL GROMMETS ON INLET AND OUTLET FITTINGS**

5. **CONNECT LIQUID LINE TUBE TO COOLING UNIT INLET FITTINGS**

   Torque: 135 kg-cm (10 ft-lb, 13 N·m)

6. **CONNECT SUCTION FLEXIBLE HOSE TO COOLING UNIT OUTLET FITTING**

   Torque: 325 kg-cm (24 ft-lb, 32 N·m)

7. **IF EVAPORATOR WAS REPLACED, ADD COMPRESSOR OIL TO COMPRESSOR**

   Add 40 — 50 cc (1.4 — 1.7 oz)

8. **CONNECT NEGATIVE CABLE TO BATTERY**

9. **EVACUATE, CHARGE AND TEST REFRIGERATION SYSTEM (See page AC-14)**

REFRIGERANT LINES

ON-VEHICLE INSPECTION

1. **INSPECT HOSES AND TUBES FOR LEAKAGE**
   Use a gas leak tester. Replace, if necessary.
2. **CHECK THAT HOSE AND TUBE CLAMPS ARE NOT LOOSE**
   Tighten or replace, as necessary.

REPLACEMENT OF REFRIGERANT LINES

(See page AC-19)

1. **DISCHARGE REFRIGERATION SYSTEM**
   (See page AC-14)
2. **REPLACE FAULTY TUBE OR HOSE**
   NOTE: Cap the open fittings immediately to keep moisture out of the system.

Tightening torques for O-ring fittings

Fitting size	Torque
3/8 in. tube for liquid line	135 kg-cm (10 ft-lb, 13 N·m)
1/2 in. tube for discharge line	225 kg-cm (16 ft-lb, 22 N·m)
5/8 in. tube for suction line	325 kg-cm (24 ft-lb, 32 N·m

3. **EVACUATE, CHARGE AND TEST REFRIGERATION SYSTEM (See page AC-14)**

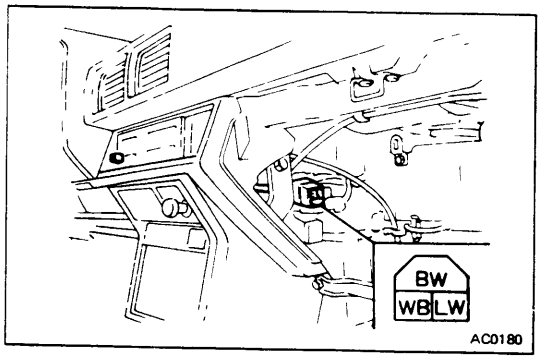

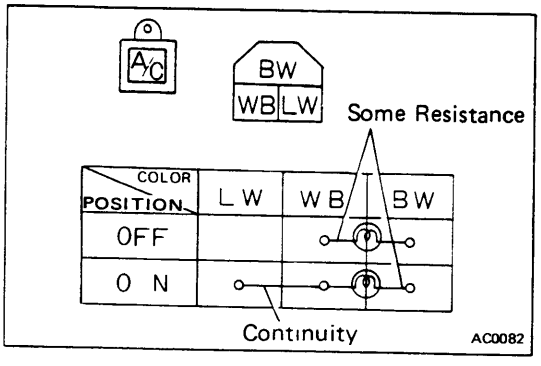

A/C SWITCH

ON-VEHICLE INSPECTION

1. **DISCONNECT NEGATIVE CABLE FROM BATTERY**
2. **REMOVE GLOVE BOX**
3. **DISCONNECT A/C SWITCH CONNECTOR**
4. **CHECK A/C SWITCH FOR CONTINUITY**
   Using an ohmmeter, check for continuity between the terminals for each switch position shown in the table.
   If there is no continuity, replace the A/C switch.
5. **CONNECT A/C SWITCH CONNECTOR**
6. **INSTALL CENTER CLUSTER**
7. **CONNECT NEGATIVE CABLE TO BATTERY**

LOW PRESSURE SWITCH

(See page AC-19)

INSPECTION OF LOW PRESSURE SWITCH

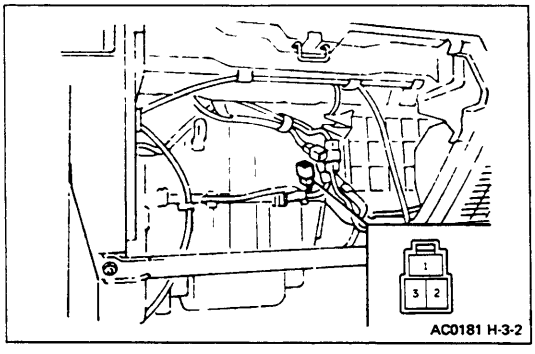

1. CHECK REFRIGERANT PRESSURE

   (a) Connect the hoses of the manifold gauge set to the compressor service valves and observe the gauge reading.

   (b) The gauge reading must be more than 2.1 kg/cm² (30 psi, 206 kPa) when the ambient temperature is higher than 0°C (32°F).

   If the pressure is less than 2.1 kg/cm² (30 psi, 206 kPa), charge the refrigerant. (See page AC-15)

2. CHECK LOW PRESSURE SWITCH

   (a) Remove the glove box.

   (b) Disconnect the lead wires of the A/C harness.

   (c) Using an ohmmeter, check the continuity between the two terminals of the low pressure switch.
   The ohmmeter must indicate zero ohm.

   If there is no continuity, replace the low pressure switch. (See page AC-19)

3. REINSTALL REMOVED PARTS IN REVERSE ORDER

THERMO SWITCH(TOWING PACKAGE)

INSPECTION OF THERMO SWITCH

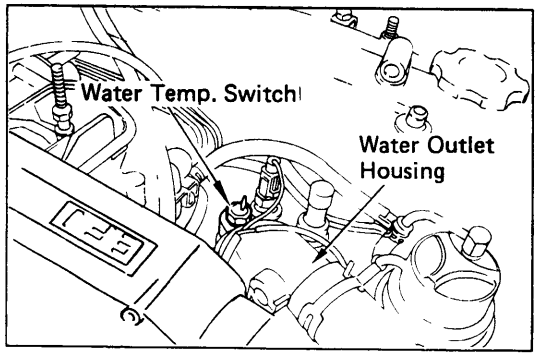

1. CHECK THERMO SWITCH

   (a) Disconnect the lead wire of thermo switch.

   (b) Using an ohmmeter, check the continuity between the terminal of thermo switch and ground.
   The ohmmeter must indicate zero ohm when engine coolant temperature is less than 101°C (213°F).

   If there is no continuity, replace the thermo switch.

2. REINSTALL REMOVED PARTS IN REVERSE ORDER

THERMO RELAY (TOWING PACKAGE)

INSPECTION OF THERMO RELAY

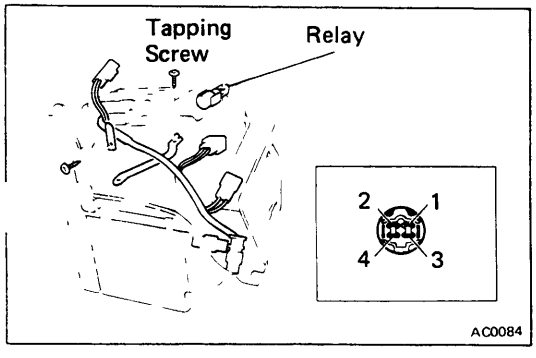

1. REMOVE THERMO RELAY

2. CHECK THERMO RELAY

   Using an ohmmeter, check the continuity between terminals 2 and 4.

   Normal ..... No continuity

   With 12V battery applied across terminals 1 and 3
   Terminals 2 and 4 ..... Continuity

   If defective, replace the thermo relay.

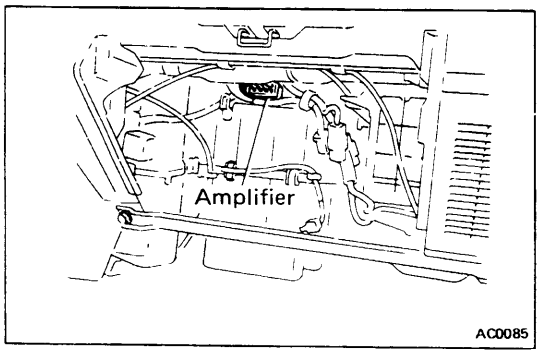

AIR CONDITIONER AMPLIFIER

(See page AC-19)

INSPECTION OF AIR CONDITIONER AMPLIFIER

1. CHECK ENGINE SPEED DETECTING CIRCUIT

(a) Run the engine, and operate the air conditioner.

(b) Check that the magnetic clutch disengages at the specific engine revolution.

Cut-off rpm: 600 — 700 rpm

If the cut-off rpm is too high, turn the adjusting knob clockwise to adjust.

If the cut-off rpm is too low, turn the adjusting knob counterclockwise to adjust.

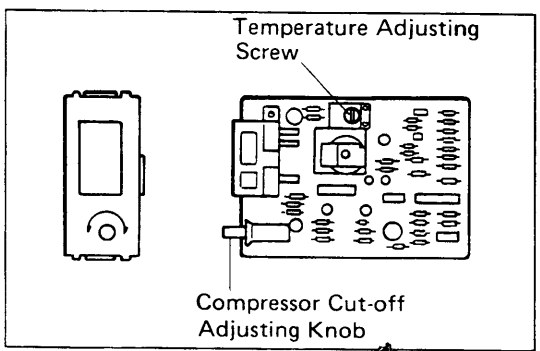

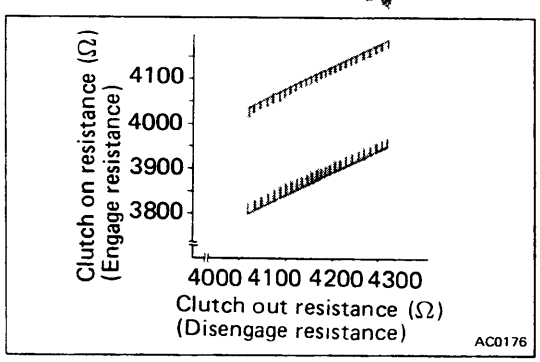

2. CHECK TEMPERATURE DETECTING CIRCUIT

(a) Remove the glove box.

(b) Disconnect the thermistor connector and connect the variable resistor.

(c) Run the engine and operate the air conditioner to get maximum cooling.

- Air intake control: RECIRC
- Air flow control: VENT
- Temperature control: COOL
- Blower control: HI

(d) Measure the resistance of the variable resistor when the magnetic clutch engages and disengages.

If the resistance is not between the two lines, adjust the amplifier.

If the resistance is too high, turn the temperature adjusting screw clockwise.

If the resistance is too low or the evaporator is frosted, turn the temperature adjusting screw counterclockwise until the magnetic clutch engages at the standard resistance.

VACUUM SWITCHING VALVE (VSV)

(See page AC-19)

INSPECTION OF VSV

1. **DISCONNECT VACUUM HOSES AND CONNECTOR FROM VSV**

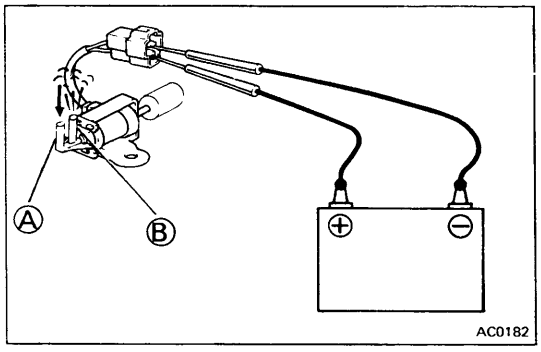

2. **CHECK VACUUM CIRCUIT CONTINUITY IN VSV BY BLOWING AIR INTO PIPE**
   (a) Connect the VSV terminals to the battery terminals as shown.
   (b) Blow into pipe Ⓐ, and check that air comes out of pipe Ⓑ.

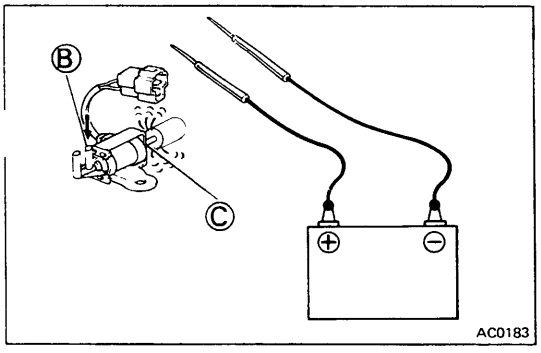

   (c) Disconnect the battery.
   (d) Blow into pipe Ⓑ and check that air comes out of filter Ⓒ — not out of pipe Ⓐ.

   If a problem is found, replace the VSV.

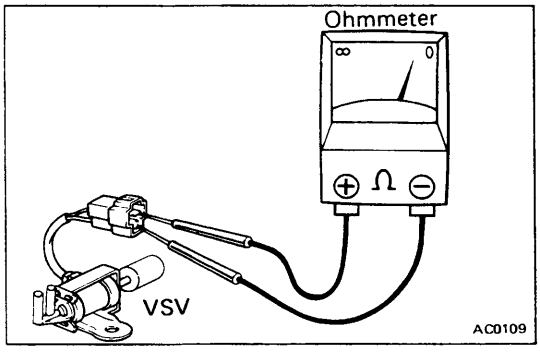

3. **CHECK FOR SHORT CIRCUIT**

   Using an ohmmeter, check that there is no continuity between two terminals.

   If a short circuit is found, repair or replace the VSV.

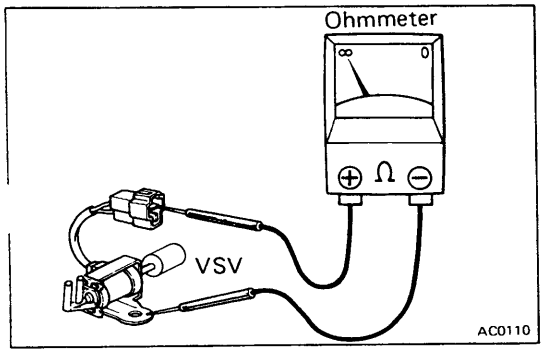

4. **CHECK FOR OPEN CIRCUIT**

   Using an ohmmeter, measure the resistance between two terminals of the VSV.

   Specified resistance: 38 — 43 Ω at 20°C (68°F)

   If the resistance is not within specification, replace the VSV.

SERVICE SPECIFICATIONS

	Page
MAINTENANCE	A-2
ENGINE MECHANICAL	A-3
EFI SYSTEM	A-5
FUEL SYSTEM	A-7
COOLING SYSTEM	A-7
LUBRICATION SYSTEM	A-7
IGNITION SYSTEM	A-8
STARTING SYSTEM	A-8
CHARGING SYSTEM	A-9
CLUTCH	A-9
MANUAL TRANSMISSION	A-10
AUTOMATIC TRANSMISSION	A-14
TRANSFER	A-19
PROPELLER SHAFT	A-20
FRONT AXLE AND SUSPENSION	A-21
REAR AXLE AND SUSPENSION	A-25
BRAKE SYSTEM	A-28
STEERING	A-30
WINCH	A-33
LUBRICANTS	A-34

MAINTENANCE

Engine

Drive belt tension			New belt	125 ± 25 lb	
			Used belt	80 ± 20 lb	
Coolant capacity w/heater or air conditioner				8.4 liters	8.9 US qts	7.4 Imp. qts
Engine oil capacity drain and refill with oil filter change				4.6 liters	4.9 US qts	4.0 Imp. qts
Spark plug	Type		ND	W16EXR-U	
			NGK	BPR5EY	
	Gap			0.8 mm	0.031 in.
Firing order				1–3–4–2	
Valve clearance (hot)			Intake	0.20 mm	0.008 in.
			Exhaust	0.30 mm	0.012 in.
Idle speed			22R	700 rpm M/T	750 rpm A/T
			22R-E	750 rpm	
Fast idle speed			22R	2600 rpm (EGR system OFF and choke opener OFF)	

Chassis

Front brake						
Pad thickness			Limit	1.0 mm	0.039 in.	
Disc thickness	Limit	2WD	1/2 ton	21.0 mm	0.827 in.	
		4WD	1 ton, C&C	24.0 mm	0.945 in.	
			Limit	11.5 mm	0.453 in.	
Disc runout			Limit	0.15 mm	0.0059 in.	
Rear brake						
Lining thickness			Limit	1.0 mm	0.039 in.	
Drum inner diameter			Limit	256.0 mm	10.079 in.	
Front axle and suspension						
Ball joint vertical play			Limit	2.3 mm	0.091 in.	
Wheel bearing friction preload (at starting)			2WD	0.6 – 1.8 kg	1.3 – 4.0 lb	5.9 – 17.7 N
			4WD	2.8 – 5.6 kg	6.2 – 12.3 lb	27 – 55 N
Steering wheel freeplay			Less than	30 mm	1.18 in.	
Tightening torque						
Seat mounting bolts				375 kg-cm	27 ft-lb	37 N·m
Leaf spring U-bolt			2WD	1,000 kg-cm	72 ft-lb	98 N·m
			4WD	1,250 kg-cm	90 ft-lb	123 N·m
Strat bar bracket x frame				530 kg-cm	38 ft-lb	52 N·m

ENGINE MECHANICAL

Specifications

Compression pressure		STD		More than 12.0 kg/cm²	171 psi 1,177 kPa
		Limit		10.0 kg/cm²	142 psi 981 kPa
	Differential of pressure between each cylinder			Less than 1.0 kg/cm²	14 psi 98 kPa
Cylinder head	Head surface warpage	Limit		0.15 mm	0.0059 in.
	Valve seat Refacing angle		IN	30°, 45°, 60°	
			EX	30°, 45°, 65°	
	Contacting angle			45°	
	Contacting width			1.2 – 1.6 mm	0.047 – 0.063 in.
Valve guide bushing	Inner diameter	Intake		8.01 – 8.03 mm	0.3154 – 0.3161 in.
		Exhaust		8.01 – 8.03 mm	0.3154 – 0.3161 in.
	Outer diameter	STD		13.040 – 13.051 mm	0.5134 – 0.5138 in.
		O/S type 0.05		13.090 – 13.101 mm	0.5154 – 0.5158 in.
	Protrusion from cylinder head			19 mm	0.75 in.
	Replacing temperature (cylinder head side)			Normal temperature	
Valve	Valve overall length	STD	Intake	113.5 mm	4.468 in.
			Exhaust	112.4 mm	4.425 in.
	Valve face angle		IN & EX	44.5°	
	Stem diameter	STD	Intake	7.970 – 7.985 mm	0.3138 – 0.3144 in.
			Exhaust	7.965 – 7.980 mm	0.3136 – 0.3142 in.
	Stem end refacing	Limit	IN & EX	0.5 mm	0.020 in.
	Stem oil clearance	STD	Intake	0.02 – 0.06 mm	0.0008 – 0.0024 in.
			Exhaust	0.03 – 0.07 mm	0.0012 – 0.0028 in.
		Limit	Intake	0.08 mm	0.0031 in.
			Exhaust	0.10 mm	0.0039 in.
	Valve head edge thickness	Limit		0.6 mm	0.024 in.
Valve spring	Free length			45.8 mm	1.803 in.
	Installed length			40.5 mm	1.594 in.
	Installed load	STD		25.0 kg	55.1 lb 245 N
		Limit		22.5 kg	49.6 lb 221 N
	Squareness	Limit		1.6 mm	0.063 in.
Rocker arm and shaft	Rocker shaft diameter			15.97 – 15.99 mm	0.6287 – 0.6295 in.
	Shaft to arm oil clearance	STD		0.01 – 0.05 mm	0.0004 – 0.0020 in.
		Limit		0.08 mm	0.0031 in.
Intake and exhaust manifold	Manifold surface warpage	Limit	Intake	0.20 mm	0.0079 in.
			Exhaust	0.70 mm	0.0276 in.
Chain and sprocket	Crankshaft sprocket wear	Limit		59.4 mm	2.339 in.
	Camshaft sprocket wear	Limit		113.8 mm	4.480 in.
Tension and damper	Tensioner head thickness	Limit		11.0 mm	0.433 in.
	Damper No. 1 wear	Limit		0.5 mm	0.020 in.
	Damper No. 2 wear	Limit		0.5 mm	0.020 in.

Specifications (Cont'd)

Camshaft	Thrust clearance	STD		0.08 – 0.18 mm	0.0031 – 0.0071 in.
		Limit		0.25 mm	0.0098 in.
	Journal oil clearance	STD		0.01 – 0.05 mm	0.0004 – 0.0020 in.
		Limit		0.1 mm	0.004 in.
	Journal diameter	STD		32.98 – 33.00 mm	1.2984 – 1.2992 in.
	Circle runout	Limit		0.2 mm	0.008 in.
	Cam height	Intake		42.63 – 42.72 mm	1.6783 – 1.6891 in.
		Exhaust		42.69 – 42.78 mm	1.6807 – 1.6842 in.
Cylinder block	Warpage	Limit		0.05 mm	0.0020 in.
	Cylinder bore	STD		92.00 – 92.03 mm	3.6220 – 3.6232 in.
	Cylinder bore wear	Limit		0.2 mm	0.008 in.
	Difference of bore limit between cylinder			Less than 0.03 mm (0.0012 in.)	
	Taper and out-of-round	Limit		0.02 mm	0.0008 in.
Piston and piston ring	Piston diameter	STD		91.938 – 91.968 mm	3.6196 – 3.6208 in.
		O/S type 0.50		92.438 – 92.468 mm	3.6393 – 3.6405 in.
		O/S type 1.00		92.938 – 92.968 mm	3.6590 – 3.6602 in.
	Piston to cylinder clearance			0.03 – 0.05 mm	0.0012 – 0.0020 in.
	Piston ring end gap	Standard	No. 1	0.24 – 0.39 mm	0.009 – 0.015 in.
			No. 2	0.18 – 0.42 mm	0.007 – 0.017 in.
			Oil	0.20 – 0.82 mm	0.008 – 0.032 in.
		Maximum	No. 1	0.99 mm	0.039 in.
			No. 2	1.02 mm	0.040 in.
			Oil	1.42 mm	0.056 in.
	Ring to ring groove clearance	Limit	No. 1, No. 2	0.2 mm	0.008 in.
	Piston pin installing temperature			80°C	176°F
Connecting rod and bearing	Thrust clearance	STD		0.16 – 0.26 mm	0.0063 – 0.0102 in.
		Limit		0.30 mm	0.0118 in.
	Bearing oil clearance	STD		0.025 – 0.055 mm	0.0010 – 0.0022 in.
		Limit		0.10 mm	0.0039 in.
	Pin to bushing oil clearance	STD		0.005 – 0.011 mm	0.0002 – 0.0004 in.
		Limit		0.015 mm	0.0006 in.
	Rod bend	Limit		0.05 mm	0.0020 in.
	Rod twist	Limit		0.15 mm	0.0059 in.
Crankshaft	Thrust clearance	STD		0.02 – 0.22 mm	0.0008 – 0.0087 in.
		Limit		0.30 mm	0.0118 in.
	Thrust washer thickness	STD		2.00 mm	0.0787 in.
		O/S type 0.125		2.06 mm	0.0811 in.
		O/S type 0.25		2.13 mm	0.0839 in.
	Main journal oil clearance	STD		0.025 – 0.055 mm	0.0010 – 0.0022 in.
		Limit		0.08 mm	0.0031 in.
	Main journal diameter	STD		59.984 – 60.000 mm	2.3616 – 2.3622 in.
		Bearing U/S type 0.25		59.70 – 59.71 mm	2.3504 – 2.3508 in.
		Bearing U/S type		0.25 mm	0.0098 in.
	Crank pin oil clearance	STD		0.025 – 0.055 mm	0.0010 – 0.0022 in.
		Limit		0.08 mm	0.031 in.
	Crank pin diameter	STD		52.988 – 53.000 mm	2.0861 – 2.0866 in.
		Bearing U/S type 0.25		52.70 – 52. 71 mm	2.0748 – 2.0752 in.
		Bearing U/S type		0.25 mm	0.0098 in.
	Circle runout	Limit		0.1 mm	0.004 in.
	Main journal taper and out-of-round		Limit	0.01 mm	0.0004 in.
	Crank pin journal taper and out-of-round		Limit	0.01 mm	0.0004 in.

Tightening Torque

Tightening part		kg-cm	ft-lb	N-m
Cylinder head x Cylinder block		800	58	78
Manifold x Cylinder head	Intake	195	14	19
	Exhaust	450	33	44
Crankshaft bearing cap x Cylinder block		1,050	76	103
Connecting rod cap x Connecting rod		630	46	62
Crankshaft pulley x Crankshaft		1,600	116	157
Flywheel x Crankshaft		1,100	80	108
Camshaft bearing cap x Cylinder head		200	14	20
Camshaft timing sprocket x Camshaft		800	58	78
Oil pan x Cylinder block		60	52 in.-lb	5.9

EFI SYSTEM

Pressure regulator	Fuel pressure	at No vacuum	2.3 – 2.7 kg/cm² 33 – 38 psi 226 – 265 kPa
Cold start injector	Resistance		2 – 4 Ω
	Leakage		Less than one drop of fuel per minute
Injector	Resistance		1.5 – 3.0 Ω
	Injection volume		40 – 50 cc/15 sec (2.4 – 3.1 cu in.)
	Difference between each injector		Less than 6 cc (0.37 cu in.)
	Leakage		Less than one drop of fuel per minute
Air flow meter	Resistance	E_2 – Vs	20 – 400 Ω (Measuring plate fully closed) 20 – 1,000 Ω (Measuring plate fully open)
		E_2 – Vc	100 – 300 Ω
		E_2 – V_B	200 – 400 Ω
		E_1 – Fc	∞ (Measuring plate fully closed) 0 (Measuring plate open)
		E_2 – THA	10 – 20 kΩ (–20°C, –4°F) 4 – 7 kΩ (0°C, 32°F) 2 – 3 kΩ (20°C, 68°F) 0.9 – 1.3 kΩ (40°C, 104°F) 0.4 – 0.7 kΩ (60°C, 140°F)
Auxiliary air valve	Resistance		39 – 59 Ω
	Temperature	w/ valve closed	About 120°C (248°F)
Throttle body	Throttle valve fully closed angle		6°

Throttle position sensor	Clearance between lever and stop screw	Between terminals	Resistance
	0 mm 0 in.	VTA – E_2	0.2 – 0.8 kΩ
	0.57 mm 0.0224 in.	IDL – E_2	0 – 100 Ω
	0.85 mm 0.0335 in.	IDL – E_2	Infinity
	Throttle valve fully opened position	VTA – E_2	3.3 – 10 kΩ
	–	Vcc – E_2	3 – 7 kΩ

EFI SYSTEM (Cont'd)

Main relay	Resistance	1 – 2	60 – 80 Ω
		3 – 4	∞
Circuit opening relay	Resistance	STA – E_1	17 – 25 Ω
		+B – Fc	88 – 132 Ω
		+B – Fp	∞
Resistor	Resistance		2 – 3 Ω each
Start injector time switch	Resistance	STA – STJ	20 – 40 Ω (below 30°C, 86°F) 40 – 60 Ω (above 40°C, 104°F)
		STA – Ground	20 – 80 Ω
Temperature sensor	Resistance		10 – 20 kΩ (–20°C, –4°F) 4 – 7 kΩ (0°C, 32°F) 2 – 3 kΩ (20°C, 68°F) 0.9 – 1.3 kΩ (40°C, 104°F) 0.4 – 0.7 kΩ (60°C, 140°F) 0.2 – 0.4 kΩ (80°C, 176°F)

ECU

NOTE: 1. Perform all voltage and resistance measurements with the ECU connected.
2. Verify that the battery voltage is 11V or above when the ignition switch is ON.
3. The testing probes must not make contact with the computer Ox and VF terminals.

+B – E_1	10 – 14	Ignition switch ON	
BATT – E_1	10 – 14	–	
IDL – E_2	4 – 10	Throttle valve open	
VTA – E_2	0.1 – 1.0	Ignition switch ON	Throttle valve fully closed
	4 – 5		Throttle valve fully open
Vcc – E_2	4 – 6		–
IGt – E_1	0.7 – 1.0	Idling	
STA – E_1	6 – 12	Ignition switch ST position	
No. 10 – E_1 No. 20 – E_1	9 – 14	Ignition switch ON	
W – E_1	8 – 14	No trouble (CHECK ENGINE light go off) and engine running	
Vc – E_2	4 – 9	Ignition switch ON	–
Vs – E_2	0.5 – 2.5		Measuring plate fully closed
	5 – 8		Measuring plate fully open
	2.5 – 5.5	Idling	
THA – E_2	2 – 6	Ignition switch ON	Intake air temperature 20°C or 68°F
THW – E_2	0.5 – 2.5	Ignition switch ON	Coolant temperature 80°C or 176°F
B/K – E_2	8 – 14	Stop light switch ON	

Resistance	E_1 – E_2	0 Ω
	E_1 – BODY	0 Ω
	E_1 – E_{01}	0 Ω
	E_1 – E_{02}	0 Ω
Fuel cut rpm	Cut M/T	2,130 rpm (Brake switch OFF)
	A/T	2,200 rpm
	Hysteresis	300 – 500 rpm (Brake switch ON)
		230 – 430 rpm (Brake switch OFF)

FUEL SYSTEM

Carburetor	Float level Raised position (float top to air horn)		9.8 mm 0.386 in.
	Lowered position (float bottom to air horn)		48 mm 1.89 in.
	Float lip clearance (at float lowered)		1 mm 0.04 in.
	Throttle valve closed angle	Primary	9° from horizontal plane
		Secondary	20° from horizontal plane
	Throttle valve full open angle	Primary	90° from horizontal plane
		Secondary	90° from horizontal plane
	Secondary touch angle		59° from horizontal plane
	Fast idle angle		23° from horizontal plane
	Fast idle speed		2,600 rpm
	Unloader angle		45° from horizontal plane
	Choke breaker opening angle		42° from horizontal plane
	Choke heater	Resistance	20 – 22 Ω at 20°C (68°F)
	Idle-up angle		16.5° from horizontal plane
	Dash pot touch angle		24.5° from horizontal plane
	Dash pot setting speed		3,000 rpm
	Idle speed	M/T	700 rpm
		A/T	750 rpm
	Idle mixture adjusting screw presetting		Screw out 3-1/2 turns
	Idle mixture speed	M/T	740 rpm
		A/T	790 rpm

COOLING SYSTEM

Radiator	Relief valve opening pressure	STD	0.75–1.05 kg/cm² 10.7–14.9 psi 74–103 kPa
		Limit	0.6 kg/cm² 8.5 psi 59 kPa
Thermostat	Valve opening temperature		
	Starts to open at		88°C 190°F
	Fully opens at		100°C 212°F
	Valve opening travel		8 mm 0.31 in.

LUBRICATION SYSTEM

Oil pressure (normal operating temperature)			
	at idle speed		More than 0.3 kg/cm² (4.3 psi, 29 kPa)
	at 3,000 rpm		2.5–5.0 kg/cm² (36–71 psi, 245–490 kPa)
Oil pump	Body clearance	STD	0.09 – 0.15 mm 0.0035 – 0.0059 in.
		Limit	0.2 mm 0.008 in.
	Tip clearance		
	Drive gear to crescent	STD	0.15 – 0.21 mm 0.0059 – 0.0083 in.
		Limit	0.3 mm 0.012 in.
	Drive gear to crescent	STD	0.22 – 0.25 mm 0.0087 – 0.0098 in.
		Limit	0.3 mm 0.012 in.
	Side clearance	STD	0.03 – 0.09 mm 0.0012 – 0.0035 in.
		Limit	0.15 mm 0.0059 in.
	Relief valve operating pressure		4.5 kg/cm² 64 psi 441 kPa

IGNITION SYSTEM

Spark plug	Type		ND NGK		W16EXR-U BPR5EY		
	Gap		0.8 mm		0.031 in.		
Distributor (22R Engine)	Air gap		0.2 – 0.4 mm		0.008 – 0.016 in.		
	Distributor advance angle	Governor	Distributor rpm		Advance angle		
			600 873 1,200 2,400 3,000		Advance begins 1.8° 4.5° 13.0° 12.4°		
		Vacuum		Ex. Calif.		For Calif.	
				mmHg (in.Hg, kPa)	Advance angle	mmHg (in.Hg, kPa)	Advance angle
			Main	80 (3.15, 10.7) 132 (5.20, 17.6) 190 (7.48, 25.3)	Advance begins 5.9° 10.0°	80 (3.15, 10.7) 212 (8.35, 28.3) 330 (13.00, 44.0)	Advance begins 7.2° 12.5°
			Sub	200 (7.87, 26.7) 246 (9.69, 32.8) 300 (11.81, 40.0)	Advance begins 3.2° 6.0°	200 (7.87, 26.7) 300 (11.81, 40.0)	Advance begins 6.0°
High tension wire	Resistance		Limit		Less than 25 kΩ per cord		
Ignition coil					22R-E	22R	
	Primary coil resistance				0.8 – 1.1 Ω	0.4 – 0.5 Ω	
	Secondary coil resistance				10.7 – 14.5 kΩ	8.5 – 11.5 kΩ	
	Insulation resistance w/500V megohm meter				10 MΩ or more		

STARTING SYSTEM

Reduction type starter	Rated voltage and output power			12V, 1.0 kW	12V, 1.4 kW
	No-load characteristic		Ampere	Less than 90A	Less than 90A
			rpm	More than 3,000 rpm at 11.5V	More than 3,500 rpm at 11.5V
	Brush	Length	STD	13.0 mm 0.512 in.	15.0 mm 0.591 in.
			Limit	8.5 mm 0.335 in.	10.0 mm 0.394 in.
	Commutator	Outer diameter	STD	30 mm 1.18 in.	←
			Limit	29 mm 1.14 in.	←
		Mica depth	STD	0.5 – 0.8 mm 0.020 – 0.031 in.	←
			Limit	0.2 mm 0.008 in.	←
		Runout	Limit	0.05 mm 0.0020 in.	←
	Spring installed load		STD	1,785 – 2,415 g 3.9 – 5.3 lb 18 – 24 N	←
			Limit	1,200 g 2.6 lb 12 N	←

A04978

CHARGING SYSTEM

Battery specific gravity when fully charged at 20°C (68°F)			1.25 – 1.27	
Alternator	Rated output ampere		60 A	
	Brush exposed length	STD	10.5 mm	0.413 in.
		Limit	4.5 mm	0.177 in.
	Rotor coil resistance		2.9 – 3.0 Ω	
	Slip ring diameter	STD	14.4 mm	0.567 in.
		Limit	14.0 mm	0.551 in.
Alternator regulator	Regulator voltage		13.5 – 15.1 V (at 25°C)	

CLUTCH

Specifications

Pedal height (from asphalt sheet)		144 mm	5.67 in.
Push rod play at pedal top		1.0 – 5.0 mm	0.039 – 0.197 in.
Pedal freeplay		5 – 15 mm	0.20 – 0.59 in.
Disc rivet head depth	Limit	0.3 mm	0.012 in.
Disc runout	Limit	0.8 mm	0.031 in.
Diaphragm spring tip alignment	Limit	0.5 mm	0.020 in.
Diaphragm spring finger wear	Limit Depth	0.6 mm	0.024 in.
	Width	5.0 mm	0.197 in.
Flywheel runout	Limit	0.2 mm	0.008 in.

Tightening Torque

Tightening part	kg-cm	ft-lb	N-m
Clutch cover x Flywheel	195	14	19
Strap x Clutch pressure plate	195	14	19
Master cylinder reservoir set bolt	250	18	25
Master cylinder set nut	250	18	25

MANUAL TRANSMISSION

Specifications (2WD AND 4WD)

Manual transmission (W46, 55, 56)	Output shaft				
	2nd gear journal diameter		Limit	42.85 mm	1.6870 in.
	3rd gear journal diameter		Limit	37.80 mm	1.4882 in.
	Flange thickness		Limit	5.60 mm	0.2205 in.
	Runout		Limit	0.06 mm	0.0024 in.
	1st gear inner race flange thickness		Limit	4.70 mm	0.1850 in.
	1st gear inner race outer diameter		Limit	42.85 mm	1.6870 in.
	1st and 2nd gear inner diameter		Limit	49.15 mm	1.9350 in.
	3rd gear inner diameter		Limit	38.15 mm	1.5020 in.
	Counter 5th gear inner diameter		Limit	33.15 mm	1.2051 in.
	Reverse idler gear inner diameter		Limit	20.2 mm	0.795 in.
	Counter gear				
	Center bearing journal outer diameter		Limit	29.90 mm	1.1772 in.
	5th gear journal outer diameter		Limit	26.85 mm	1.0571 in.
	Reverse idler gear shaft outer diameter		Limit	19.9 mm	0.783 in.
	Reverse shift arm shoe to idler gear groove clearance		Limit	0.9 mm	0.035 in.
	Gear thrust clearance	1st, 2nd & 3rd	STD	0.10 – 0.25 mm	0.0039 – 0.0098 in.
			Limit	0.30 mm	0.0118 in.
		Counter 5th	STD	0.10 – 0.41 mm	0.0039 – 0.0161 in.
			Limit	0.46 mm	0.0181 in.
	Gear oil clearance	1st & 2nd	STD	0.009 – 0.060 mm	0.0004 – 0.0024 in.
			Limit	0.15 mm	0.0059 in.
		3rd	STD	0.060 – 0.103 mm	0.0024 – 0.0041 in.
			Limit	0.20 mm	0.0079 in.
		Counter 5th	STD	0.009 – 0.062 mm	0.0004 – 0.0024 in.
			Limit	0.15 mm	0.0059 in.
	Shift fork to hub sleeve clearance		Limit	1.0 mm	0.039 in.
	Synchronizer ring to gear clearance		STD	0.7 – 1.7 mm	0.028 – 0.067 in.
			Limit	0.5 mm	0.020 in.

A00990

Specifications (2WD and 4WD)(Cont'd)

Manual transmission (W46, 55, 56) (Cont'd)	Input shaft snap ring thickness			
		Mark		
		1	2.05 – 2.10 mm	0.0807 – 0.0827 in.
		2	2.10 – 2.15 mm	0.0827 – 0.0846 in.
		3	2.15 – 2.20 mm	0.0846 – 0.0866 in.
		4	2.20 – 2.25 mm	0.0866 – 0.0886 in
		5	2.25 – 2.30 mm	0.0886 – 0.0906 in.
		11	2.30 – 2.35 mm	0.0906 – 0.0925 in.
		12	2.35 – 2.40 mm	0.0925 – 0.0945 in.
	Output shaft snap ring thickness			
	Front	Mark		
		D	1.80 – 1.85 mm	0.0709 – 0.0728 in.
		11	1.86 – 1.91 mm	0.0732 – 0.0752 in.
		12	1.92 – 1.97 mm	0.0756 – 0.0776 in.
		13	1.98 – 2.03 mm	0.0780 – 0.0799 in.
		14	2.04 – 2.09 mm	0.0803 – 0.0823 in.
		15	2.10 – 2.15 mm	0.0827 – 0.0846 in.
	Rear	Mark		
		8	2.31 – 2.36 mm	0.0909 – 0.0929 in.
		9	2.37 – 2.42 mm	0.0933 – 0.0953 in.
		10	2.43 – 2.48 mm	0.0957 – 0.0976 in.
		11	2.49 – 2.54 mm	0.0980 – 0.1000 in.
		12	2.55 – 2.60 mm	0.1004 – 0.1024 in.
		13	2.61 – 2.66 mm	0.1028 – 0.1047 in.
		14	2.68 – 2.73 mm	0.1055 – 0.1075 in.
		15	2.74 – 2.79 mm	0.1079 – 0.1098 in.
	Reverse gear	Mark		
		5	2.25 – 2.30 mm	0.0886 – 0.0906 in.
		11	2.30 – 2.35 mm	0.0906 – 0.0925 in.
		12	2.35 – 2.40 mm	0.0925 – 0.0945 in.
		13	2.40 – 2.45 mm	0.0945 – 0.0965 in.
		14	2.45 – 2.50 mm	0.0965 – 0.0984 in.
		15	2.50 – 2.55 mm	0.0984 – 0.1004 in.
		16	2.55 – 2.60 mm	0.1004 – 0.1024 in.
		17	2.61 – 2.66 mm	0.1028 – 0.1047 in.
		18	2.67 – 2.72 mm	0.1051 – 0.1071 in.
		19	2.73 – 2.78 mm	0.1075 – 0.1094 in.
		20	2.79 – 2.84 mm	0.1098 – 0.1118 in.
		21	2.85 – 2.90 mm	0.1122 – 0.1142 in.
		22	2.91 – 2.96 mm	0.1146 – 0.1165 in.
		23	2.97 – 3.02 mm	0.1169 – 0.1189 in.

A00991

Specifications (2WD and 4WD)(Cont'd)

Manual transmission (W46, 55, 56) (Cont'd)	Countershaft snap ring thickness			
	Front	Mark		
		1	2.05 – 2.10 mm	0.0807 – 0.0827 in.
		2	2.10 – 2.15 mm	0.0827 – 0.0846 in.
		3	2.15 – 2.20 mm	0.0846 – 0.0866 in.
		4	2.20 – 2.25 mm	0.0866 – 0.0886 in.
		5	2.25 – 2.30 mm	0.0886 – 0.0906 in.
		6	2.30 – 2.35 mm	0.0906 – 0.0925 in.
		7	2.35 – 2.40 mm	0.0925 – 0.0945 in.
	Rear	Mark		
		1	1.90 – 1.95 mm	0.0748 – 0.0768 in.
		2	1.96 – 2.01 mm	0.0772 – 0.0791 in.
		3	2.02 – 2.07 mm	0.0795 – 0.0815 in.
		4	2.08 – 2.13 mm	0.0819 – 0.0839 in.
		5	2.14 – 2.19 mm	0.0843 – 0.0862 in.
		6	2.20 – 2.25 mm	0.0866 – 0.0886 in.
		7	2.26 – 2.31 mm	0.0890 – 0.0909 in.
	Clutch hub No. 3	Mark		
		2	2.06 – 2.11 mm	0.0811 – 0.0831 in.
		3	2.12 – 2.17 mm	0.0835 – 0.0854 in.
		4	2.18 – 2.23 mm	0.0858 – 0.0878 in.
		5	2.24 – 2.29 mm	0.0882 – 0.0902 in.

Tightening Torque (2WD AND 4WD)

Tightening part	kg-cm	ft-lb	N·m
Shift fork set bolt	125	19	12
Strait screw plug	250	18	25
Idler shaft stopper bolt	250	18	25
Reverse restrict pin	250	18	25
Front bearing retainer set bolt	250	18	25
Extension housing x Intermediate plate	375	27	37
Restrict pin	410	30	40
Shift lever housing x Shift and select lever	400	29	39
Shift lever retainer x Extension housing	185	13	18
Drain and filler plugs	410	30	40
Back-up light switch	410	30	40
Clutch housing x Transmission case	375	27	37

MANUAL TRANSMISSION

Specifications (4WD)

Manual transmission (G52)	Output shaft			
	2nd gear journal diameter	Limit	37.984 mm	1.4954 in.
	3rd gear journal diameter	Limit	34.984 mm	1.3773 in.
	Flange thickness	Limit	4.80 mm	0.1890 in.
	Runout	Limit	0.05 mm	0.0020 in.
	Inner race flange thickness	Limit	3.99 mm	0.1571 in.
	Inner race outer diameter	Limit	38.985 mm	1.5348 in.
	Gear thrust clearance			
	1st, 2nd and 3rd	STD	0.10 – 0.25 mm	0.0039 – 0.0098 in.
		Limit	0.25 mm	0.0098 in.
	Counter 5th	STD	0.10 – 0.30 mm	0.0039 – 0.0118 in.
		Limit	0.30 mm	0.0118 in.
	Gear oil clearance			
	1st and counter 5th	STD	0.009 – 0.032 mm	0.0004 – 0.0013 in.
		Limit	0.032 mm	0.0013 in.
	2nd and 3rd	STD	0.009 – 0.033 mm	0.0004 – 0.0013 in.
		Limit	0.033 mm	0.0013 in.
	Shift fork to hub sleeve clearance	Limit	1.0 mm	0.039 in.
	Synchronizer ring to gear clearance	STD	1.0 – 2.0 mm	0.039 – 0.079 in.
		Limit	0.8 mm	0.031 in.
	Input shaft snap ring thickness	Mark		
		0	2.05 – 2.10 mm	0.0807 – 0.0827 in.
		1	2.10 – 2.15 mm	0.0827 – 0.0846 in.
		2	2.15 – 2.20 mm	0.0846 – 0.0866 in.
		3	2.20 – 2.25 mm	0.0866 – 0.0886 in.
		4	2.25 – 2.30 mm	0.0886 – 0.0906 in.
		5	2.30 – 2.35 mm	0.0906 – 0.0925 in.
	Output shaft snap ring thickness			
	Front	Mark		
		C-1	1.75 – 1.80 mm	0.0689 – 0.0709 in.
		D	1.80 – 1.85 mm	0.0709 – 0.0728 in.
		D-1	1.85 – 1.90 mm	0.0728 – 0.0748 in.
		E	1.90 – 1.95 mm	0.0748 – 0.0768 in.
		E-1	1.95 – 2.00 mm	0.0768 – 0.0787 in.
		F	2.00 – 2.05 mm	0.0787 – 0.0807 in.
		F-1	2.05 – 2.10 mm	0.0807 – 0.0827 in.

A00993

Specifications (4WD) (Cont'd)

Manual transmission (G52) (Cont'd)	Rear	Mark		
		A	2.67 – 2.72 mm	0.1051 – 0.1071 in.
		B	2.73 – 2.78 mm	0.1075 – 0.1094 in.
		C	2.79 – 2.84 mm	0.1098 – 0.1118 in.
		D	2.85 – 2.90 mm	0.1122 – 0.1142 in.
		E	2.91 – 2.96 mm	0.1146 – 0.1165 in.
		F	2.97 – 3.02 mm	0.1169 – 0.1189 in.
		G	3.03 – 3.08 mm	0.1193 – 0.1213 in.
		H	3.09 – 3.14 mm	0.1217 – 0.1236 in.
		J	3.15 – 3.20 mm	0.1240 – 0.1260 in.
		K	3.21 – 3.26 mm	0.1264 – 0.1283 in.
		L	3.27 – 3.32 mm	0.1287 – 0.1307 in.
	Counter gear snap ring (Front Bearing)	Mark		
		1	2.05 – 2.10 mm	0.0807 – 0.0827 in.
		2	2.10 – 2.15 mm	0.0827 – 0.0846 in.
		3	2.15 – 2.20 mm	0.0846 – 0.0866 in.
		4	2.20 – 2.25 mm	0.0866 – 0.0886 in.
		5	2.25 – 2.30 mm	0.0886 – 0.0906 in.
		6	2.30 – 2.35 mm	0.0906 – 0.0925 in.

Tightening Torque (4WD)

Tightening part	kg-cm	ft-lb	N-m
Straight screw plug	190	14	19
Transfer adapter x Transmission case	380	27	37
Restrict pin	280	20	27
Shift lever retainer x Extension housing	185	13	18
Front bearing retainer x Transmission case	170	12	17
Rear bearing retainer x Intermediate plate	185	13	18
Reverse shift arm bracket	185	13	18
Counter gear rear lock nut	1,200	87	118
Reverse idler gear shaft stopper bolt	175	13	17
Clutch housing x Transmission case	380	27	37
Shift lever housing bolt	390	28	38

A00994

AUTOMATIC TRANSMISSION (A43D)

Specifications

		kg/cm²	psi	kPa
Governor pressure (Vehicle speed reference)				
Output shaft rpm 22R 22R-E 22R-E (C & C)				
1,000 (32 km/h, 20 mph) (33 km/h, 21 mph) (29 km/h, 18mph)		0.9 – 1.5	13 – 21	88 – 147
1,800 (58 km/h, 36 mph) (59 km/h, 37 mph) (52 km/h, 32mph)		1.6 – 2.2	23 – 31	157 – 216
3,500 (114 km/h, 71 mph)(115 km/h, 71 mph)(100 km/h, 62mph)		4.1 – 5.3	58 – 75	402 – 520
Line pressure (22R Engine)				
Idling	"D" range	3.5 – 4.4	50 – 63	343 – 431
	"R" range	5.0 – 6.4	71 – 91	490 – 628
Stall	"D" range	9.6 – 11.0	137 – 156	941 – 1,079
	"R" range	13.7 – 17.0	195 – 242	1,344 – 1,667
Line pressure (22R-E Engine)				
Idling	"D" range	4.6 – 5.4	65 – 77	451 – 530
	"R" range	7.0 – 8.2	100 – 117	686 – 804
Stall	"D" range	10.1 – 11.9	144 – 169	990 – 1,167
	"R" range	15.0 – 19.0	213 – 270	1,471 – 1,863

Engine stall revolution	22R Engine	1,850 ± 150 rpm
	22R-E Engine	1,900 ± 150 rpm

Engine idle speed (A/C OFF)	"N" range	"D" range
	750 rpm	700 rpm

Time lag	"N" range → "D" range	Less than 1.2 seconds
	"N" range → "R" range	Less than 1.5 seconds

Throttle cable adjustment	Throttle valve fully opened		
Between boot end face and inner cable stopper		0 – 1 mm	0 – 0.04 in.
Torque converter runout	Limit	0.30 mm	0.0118 in.
Drive plate runout	Limit	0.20 mm	0.0079 in.

Shift point schedule (22R Engine) km/h (mph)	"D" range (throttle valve fully open)						"L" range
	1 → 2	2 → 3	3 → OD	OD → 3	3 → 2	2 → 1	2 → 1
	56 – 73 (35 – 45)	105 – 124 (65 – 77)	No shift *1	*2	96 – 114 (60 – 71)	39 – 54 (24 – 34)	45 – 62 (28 – 39)
	*1 3 → OD shift up point with closed throttle valve is 36 – 49 km/h (22 – 30 mph). *2 OD → 3 down-shift is possible up to maximum speed.						

Shift point schedule (22R-E Engine Ex. C & C) km/h (mph)	"D" range (throttle valve fully open)						"L" range
	1 → 2	2 → 3	3 → OD	OD → 3	3 → 2	2 → 1	2 → 1
	59 – 76 (37 – 47)	110 – 127 (68 – 79)	No shift *1	*2	100 – 117 (62 – 73)	41 – 56 (25 – 35)	47 – 64 (29 – 40)
	*1 3 → OD shift up point with closed throttle valve is at 39 – 54 km/h (24 – 34 mph). *2 OD → 3 down-shift is possible up to maximum speed.						

Specifications (Cont'd)

Shift point schedule (22R-E Engine C & C) km/h (mph)	"D" range (throttle valve fully open)						"L" range
	1 → 2	2 → 3	3 → OD	OD → 3	3 → 2	2 → 1	2 → 1
	51 – 66 (32 – 41)	95 – 111 (59 – 69)	No shift *1	*2	86 – 102 (53 – 63)	35 – 48 (22 – 30)	41 – 56 (25 – 35)
	*1 3 → OD shift up point with closed throttle valve is at 34 – 47 km/h (21 – 29 mph). *2 OD → 3 down-shift is possible up to maximum speed.						

Valve body spring mm (in.)	Spring	Free length	Coil outer diameter	No. coils	Wire diameter
	Lower valve body				
	Primary regulator valve (22R)	73.32 (2.8866)	16.72 (0.6583)	15	1.59 (0.0626)
	Primary regulator valve (22R-E)	61.20 (2.4094)	17.20 (0.6772)	13	1.80 (0.0709)
	1-2 shift valve	34.62 (1.3630)	7.56 (0.2976)	13	0.56 (0.0220)
	3-4 shift valve	33.65 (1.3248)	10.60 (0.4173)	14.5	1.10 (0.0433)
	Oil cooler by-pass valve	33.32 (1.3118)	13.82 (0.5441)	7	1.32 (0.0520)
	Pressure relief valve ball	32.14 (1.2654)	13.14 (0.5173)	9	2.03 (0.0799)
	Damping check ball	20.00 (0.7874)	4.95 (0.1949)	15	0.38 (0.0150)
	Upper rear valve body				
	Low coast modulator valve	42.35 (1.6673)	9.24 (0.3638)	15	0.84 (0.0331)
	Sequence valve	37.55 (1.4783)	9.17 (0.3610)	14.5	1.17 (0.0461)
	Governor modulator valve	36.07 (1.4201)	9.09 (0.3579)	12	0.71 (0.0280)
	2-3 shift timing valve	35.10 (1.3819)	8.96 (0.3528)	12.5	0.76 (0.0299)
	Detent regulator valve	29.93 (1.1783)	8.85 (0.3484)	13.5	0.90 (0.0354)
	Intermediate modulator valve	27.26 (1.0732)	9.04 (0.3559)	9.5	1.10 (0.0433)
	Upper front valve body				
	Secondary regulator valve	71.27 (2.8059)	17.43 (0.6862)	15	1.93 (0.0760)
	Down shift plug	39.71 (1.5634)	10.89 (0.4287)	11.5	1.19 (0.0469)
	Throttle valve	21.94 (0.8638)	8.58 (0.3378)	8	0.71 (0.0280)

Clutch and brake return spring (C_0, C_1, C_2)	Free length		15.10 mm	0.5945 in.
	Coil outer diameter		8.0 mm	0.315 in.
	No. of coils		5.5	
Clutch and brake return spring (B_0, B_1, B_2, B_3)	Free length		16.12 mm	0.6346 in.
	Coil outer diameter		8.0 mm	0.315 in.
	No. of coils		6	
Oil pump	Side clearance	STD	0.02 – 0.05 mm	0.0008 – 0.0020 in.
		Limit	0.1 mm	0.004 in.
	Body clearance	STD	0.07 – 0.15 mm	0.0028 – 0.0059 in.
		Limit	0.3 mm	0.012 in.
	Tip clearance Driven gear	STD	0.11 – 0.14 mm	0.0043 – 0.0055 in.
		Limit	0.3 mm	0.012 in.

Specifications (Cont'd)

Clutch and brake piston stroke	Front clutch (C_1)	STD	1.32 – 2.66 mm	0.0520 – 0.1047 in.
	Rear clutch (C_2)	STD	0.91 – 1.99 mm	0.0358 – 0.0783 in.
	OD clutch (C_0)	STD	1.47 – 2.28 mm	0.0579 – 0.0898 in.
	No. 1 brake (B_1)	STD	0.58 – 1.30 mm	0.0228 – 0.0512 in.
	No. 2 brake (B_2)	STD	1.01 – 2.25 mm	0.0398 – 0.0886 in.
Brake clearance	No. 3 brake (B_3)	STD	0.61 – 2.64 mm	0.0240 – 0.1039 in.
	OD brake (B_0)	STD	0.65 – 2.21 mm	0.0256 – 0.0870 in.

Accumulator piston mm (in.)

	Length	Outer diameter
B_2 Front	48.5 (1.909)	34.8 (1.370)
C_2 Center	45.0 (1.772)	31.8 (1.252)
C_1 Rear	49.5 (1.949)	31.8 (1.252)

Accumulator piston spring mm (in.)

	Engine	Free length	Coil outer diameter	No. coils	Wire diameter
B_2 Front	22R	66.50 (2.6180)	17.91 (0.7051)	13.5	2.60 (0.1024)
	22R-E	66.68 (2.6252)	16.36 (0.6441)	14.5	2.60 (0.1024)
C_2 Center	All	55.18 (2.1724)	15.87 (0.6248)	8.5	2.00 (0.0787)
C_1 Rear	22R	68.56 (2.6992)	17.53 (0.6902)	15.5	2.03 (0.0800)
	22R-E	64.80 (2.5512)	17.20 (0.6772)	13	2.00 (0.0787)

Bushing bore mm (in.)

Bushing name		Length	Finished bore	Bore limit
Stator support	Front	9.70 (0.3819)	21.501 – 21.527 (0.8465 – 0.8475)	21.577 (0.8495)
	Rear	17.45 (0.6870)	21.501 – 21.527 (0.8465 – 0.8475)	21.577 (0.8495)
Oil pump body		13.46 (0.5299)	38.113 – 38.138 (1.5005 – 1.5015)	38.188 (1.5035)
OD sun gear	Front & Rear	9.70 (0.3819)	23.062 – 23.088 (0.9080 – 0.9090)	23.138 (0.9109)
OD input shaft		9.00 (0.3543)	11.200 – 11.221 (0.4409 – 0.4418)	11.271 (0.4437)
Sun gear	Front & Rear	13.50 (0.5315)	21.501 – 21.527 (0.8465 – 0.8475)	21.577 (0.8495)
Center support		60.07 (2.3650)	36.386 – 36.411 (1.4325 – 1.4335)	36.461 (1.4355)
Transmission case		13.46 (0.5299)	38.113 – 38.138 (1.5005 – 1.5015)	38.188 (1.5035)
Output shaft		9.70 (0.3819)	18.001 – 18.026 (0.7087 – 0.7096)	18.076 (0.7117)
Extension housing		29.75 (1.1713)	38.000 – 38.025 (1.4961 – 1.4970)	38.075 (1.4990)

Tightening Torque

Tightening part		kg-cm	ft-lb	N-m
Engine x Transmission		650	47	64
Transmission housing x Converter housing	17 mm	580	42	57
	14 mm	345	25	34
Extension housing		345	25	34
Drive plate		850	61	83
Torque converter		185	13	18
Oil pump		215	16	21
Center support		260	19	25
Upper valve body x Lower valve body		55	48 in.-lb	5.4
Valve body		100	7	10
Oil strainer		55	48 in.-lb	5.4
Oil pan		45	39 in.-lb	4.4
Cooler pipe union nut		350	25	34
Testing plug		75	65 in.-lb	7.4
Parking lock pawl bracket		75	65 in.-lb	7.4
Drain plug		205	15	20
Governor body		40	35 in.-lb	3.9

TRANSFER

Specifications

Output shaft bearing thrust clearance		Less than 0.1 mm (0.004 in.)	
Output shaft snap ring thickness	Mark		
	0	2.40 – 2.45 mm	0.0945 – 0.0965 in.
	1	2.45 – 2.50 mm	0.0965 – 0.0984 in.
	2	2.50 – 2.55 mm	0.0984 – 0.1004 in.
	3	2.55 – 2.60 mm	0.1004 – 0.1024 in.
	4	2.60 – 2.65 mm	0.1024 – 0.1043 in.
	5	2.65 – 2.70 mm	0.1043 – 0.1063 in.
Output shaft runout	Limit	0.03 mm	0.0012 in.
Low gear to output shaft oil clearance	STD	0.010 – 0.055 mm	0.0004 – 0.0022 in.
	Limit	0.075 mm	0.0030 in.
Low gear thrust clearance	STD	0.10 – 0.25 mm	0.0039 – 0.0098 in.
	Limit	0.30 mm	0.0118 in.
Transfer drive gear to output shaft oil clearance			
	STD	0.009 – 0.051 mm	0.0004 – 0.0020 in.
	Limit	0.071 mm	0.0028 in.
Transfer drive gear thrust clearance	STD	0.09 – 0.27 mm	0.0035 – 0.0106 in.
	Limit	0.32 mm	0.0126 in.
Input shaft bearing thrust clearance		Less than 0.15 mm (0.0059 in.)	
Input shaft snap ring thickness	Mark		
	1	2.05 – 2.10 mm	0.0807 – 0.0827 in.
	3	2.15 – 2.20 mm	0.0846 – 0.0866 in.
	5	2.25 – 2.30 mm	0.0886 – 0.0906 in.
Counter shaft bearing thrust clearance		Less than 0.15 mm (0.0059 in.)	
Counter shaft snap ring thickness	Mark		
	1	2.10 – 2.15 mm	0.0827 – 0.0846 in.
	3	2.20 – 2.25 mm	0.0866 – 0.0886 in.
Idler gear shaft bearing thrust clearance		Less than 0.15 mm (0.0059 in.)	
Idler gear shaft snap ring thickness	Mark		
	A	1.50 – 1.55 mm	0.0591 – 0.0610 in.
	B	1.60 – 1.65 mm	0.0630 – 0.0650 in.
Shift fork to hub sleeve clearance	Limit	1.0 mm	0.039 in.

Tightening Torque

Tightening part	kg-cm	ft-lb	N·m
Adapter x Reduction case	400	29	39
Reduction case x Front case x Rear case	400	29	39
Rear case x Extension housing	400	29	39
Front case x Rear case	400	29	39
Reduction case x Front case	400	29	39
Reduction case x Transfer cover	90	78 in.-lb	6.5
Reduction case x Shift lever retainer	130	9	13
Output shaft x Companion flange	1,250	90	123
Front drive gear bearing retainer x Front case	185	13	18
Front case x Bearing retainer	185	13	18

PROPELLER SHAFT

Specifications

Spider axial play			Less than 0.05 mm (0.0020 in.)	
Spider bearing selection				
	Mark			
Bearing cup outer diameter	None	Ex. RN50L-KRA	29.008 – 29.021 mm	1.1420 – 1.1426 in.
		RN50L-KRA	26.015 – 26.028 mm	1.0242 – 1.0247 in.
Bearing hole inner diameter	None	Ex. RN50L-KRA	29.000 – 29.021 mm	1.1417 – 1.1426 in.
		RN50L-KRA	26.000 – 26.021 mm	1.0236 – 1.0244 in.
Bearing cup outer diameter	Red	Ex. RN50L-KRA	29.028 – 29.041 mm	1.1428 – 1.1433 in.
		RN50L-KRA	26.036 – 26.049 mm	1.0250 – 1.0255 in.
Bearing hole inner diameter	Drill	Ex. RN50L-KRA	29.021 – 29.042 mm	1.1426 – 1.1434 in.
		RN50L-KRA	26.021 – 26.042 mm	1.0244 – 1.0253 in.
Snap ring thickness	Color			
	None	Ex. RN50L-KRA	1.475 – 1.525 mm	0.0581 – 0.0600 in.
		RN50L-KRA	2.375 – 2.425 mm	0.0935 – 0.0955 in.
	Brown	Ex. RN50L-KRA	1.525 – 1.575 mm	0.0600 – 0.0620 in.
		RN50L-KRA	2.425 – 2.475 mm	0.0955 – 0.0974 in.
	Blue	Ex. RN50L-KRA	1.575 – 1.625 mm	0.0620 – 0.0640 in.
		RN50L-KRA	2.475 – 2.525 mm	0.0974 – 0.0994 in.
Runout		Limit	0.8 mm	0.031 in.

Tightening Torque

Tightening part	kg-cm	ft-lb	N·m
Intermediate shaft x Propeller shaft	750	54	74
Propeller shaft x Differential (2WD)	750	54	74
Propeller shaft x Transfer (4WD)	750	54	74
Propeller shaft x Differential (4WD)	750	54	74
Intermediate shaft x Center bearing x Joint flange			
1st	1,850	134	181
A00996 2nd	Loosen nut		
3rd	700	51	69

FRONT AXLE AND SUSPENSION

Specifications (2WD)

Cold tire inflation pressure	Tire size		kg/cm² (psi, kPa)
	205/70 SR 14	Front	2.0 (28, 196)
		Rear	2.25 (32, 221)
	7.00–14–6PR	Front	1.7 (24, 167)
		Rear	2.5 (36, 245)
	P195/75 R 14	Front	2.0 (28, 196)
		Rear	2.45 (35, 240)
	185R14 LT8PR	Front	1.8 (26, 177)
		Rear	4.5 (64, 441)
	Do not drive over 120 km/h (75 mph) with cargo above 400 kg (882 lb).		

Vehicle height	Body type and Suspension type	Tire size	Vehicle height mm (in.)	
			Front	Rear
	STD Short	7.00–14–6PR	270 (10.63)	299 (11.77)
	STD Long	7.00–14–6PR	275 (10.83)	290 (11.42)
	Long Soft ride suspension	P195/75R14	260 (10.24)	277 (10.91)
	Extra cab Soft ride suspension	↑	250 (9.84)	275 (10.83)
	Extra cab STD suspension	↑	↑	273 (10.75)
	1 ton	185R14-LT8PR	262 (10.31)	295 (11.61)
	C & C	185R14-LT8PR	259 (10.20)	242 (9.53)
	SR-5 Short	P195/75 R 14	249 (9.80)	277 (10.91)
		205/70 SR 14	255 (10.04)	280 (11.02)
	SR-5 Long	P195/75 R 14	253 (9.96)	275 (10.83)
		205/70 SR 14	259 (10.20)	278 (10.94)
	Extra cab SR-5 Long	P195/75 R 14	250 (9.84)	274 (10.79)
		205/70 SR 14	256 (10.08)	278 (10.94)

Specifications (2WD) (Cont'd)

			Inspection STD	Adjustment STD
Front wheel alignment	Toe-in			
	1/2 ton Short	Bias tire	4 ± 4 mm (0.16 ± 0.16 in.)	4 ± 1 mm (0.16 ± 0.04 in.)
		Radial tire	1 ± 4 mm (0.04 ± 0.16 in.)	1 ± 1 mm (0.04 ± 0.04 in.)
	1 ton, C & C	Radial tire	4 ± 4 mm (0.16 ± 0.16 in.)	4 ± 1 mm (0.16 ± 0.04 in.)
	1/2 ton Long	Bias tire	6 ± 4 mm (0.24 ± 0.16 in.)	6 ± 1 mm (0.24 ± 0.04 in.)
		Radial tire	3 ± 4 mm (0.12 ± 0.16 in.)	3 ± 1 mm (0.12 ± 0.04 in.)
	Camber		0°30′ ± 45′	0°30′ ± 30′
		Left-right error	30′	30′
	Steering axis inclination		10°	
	Caster	1/2 ton Short	0°40′ ± 45′	0°40′ ± 30′
		1/2 ton Long	1°10′ ± 45′	1°10′ ± 30′
		1 ton	0°35′ ± 45′	0°35′ ± 30′
		C & C	0°05′ ± 45′	0°05′ ± 30′
		Left-right error	30′	30′
	Slide slip		Less than 3.0 mm/m (0.118 in./3.3 ft)	
	Wheel angle	Inside wheel	34° $^{+1°}_{-2°}$	
		Outside wheel	30°	
	At 20° wheel angle		22°15′	
Disc wheel lateral runout		Limit	1.0 mm	0.039 in.
Wheel bearing preload (rotating load at hub bolt)		Frictional force of oil seal plus	0.6 – 1.8 kg	1.3 – 4.0 lb 5.9 – 17.7 N
Hub axial play		Limit	0.05 mm	0.0020 in.
Ball joint vertical play		Limit	2.3 mm	0.091 in.
Ball joint rotation condition		Lower ball joint	25 – 50 kg-cm	(22 – 43 in.-lb, 2.5 – 4.9 N·m)
		Upper ball joint	20 – 40 kg-cm	(18 – 34 in.-lb, 2.0 – 3.9 N·m)

FRONT AXLE AND SUSPENSION

Specifications (4WD)

Cold tire inflation pressure	Tire Size		Inflation pressure kg/cm² (psi, kPa)	
			Front	Rear
	P225/75R15		1.8 (26, 177)	2.0 (28, 196)
Front wheel alignment			Inspection STD	Adjustment STD
	Toe-in		1 ± 4 mm (0.04 ± 0.16 in.)	1 ± 1 mm (0.04 ± 0.04 in.)
	Camber		1° ± 45′	
	Steering axis inclination		9°30′ ± 45′	
	Caster	TRUCK	2°15′ ± 1°	
		4-RUNNER	3°00′ ± 1°	
	Side slip		Less than 3.0 mm/m (0.118 in./3.3 ft)	
	Wheel angle	Inside wheel	30°30′ $^{+1°}_{-2°}$	
	Max.	Outside wheel	29°	
	At 20° wheel angle	Inside wheel	20°30′	
		Outside wheel	20°	

Disc wheel lateral runout	Limit	1.0 mm	0.039 in.
Wheel bearing preload (rotating load at hub bolt)	Frictional force of oil seal plus	2.8 – 5.6 kg	6.2 – 12.3 lb 27 – 55 N
Steering knuckle bearing preload (rotating load at knuckle arm end, before install dust seal)		3.0 – 6.0 kg	6.6 – 13.2 lb 29 – 59 N
Steering knuckle preload adjusting shim thickness		0.1 mm	0.004 in.
		0.2 mm	0.008 in.
		0.5 mm	0.020 in.
		1.0 mm	0.039 in.

Tightening Torque (2WD)

Tightening part	kg-cm	ft-lb	N·m
Steering knuckle x Upper ball joint	1,100	80	108
Steering knuckle x Lower ball joint	1,450	105	142
Steering knuckle x Knuckle arm x Dust cover	1,100	80	108
Upper ball joint x Upper arm	270	20	26
Lower ball joint x Lower arm	700	51	69
Shock absorber x Lower arm	185	13	18
Shock absorber x Upper bracket lock nut	250	18	25
Lower arm x Frame	2,750	199	270
Lower arm x Torque arm	500	36	49
Upper arm x Frame	1,000	72	98
Upper arm shaft x Upper arm	1,280	93	126
Strut bar x Lower arm	970	70	95
Strut bar x Strut bar bracket (Front nut)	1,250	90	123
Stabilizer bar bracket x Body	130	9	13
Stabilizer x Lower arm	130	9	13
Wheel hub nut	1,050	76	103
Disc brake cylinder x Torque plate	900	65	88
Torque plate x Steering knuckle	1,100	80	108
Tie rod clamp bolt	260	19	25

Tightening Torque (4WD)

Tightening part	kg-cm	ft-lb	N·m
Tie rod clamp bolt	375	27	37
Free wheeling hub body x Axle hub	315	23	31
Brake assembly x Adjusting nut	70	61 in.-lb	6.9
Inner hub x Axle shaft	185	13	18
Steering knuckle arm x Housing	975	71	96
Bearing cap x Housing	975	71	96
Knuckle spindle x Housing	530	38	52
Torque plate x Steering knuckle	1,100	80	108
Disc brake cylinder x Steering knuckle	900	65	88
Spring U bolt x Axle housing	1,250	90	123
Front spring bracket x Hanger pin	930	67	91
Rear spring shackle x Leaf spring	930	67	91
Front shock absorber x Axle housing	970	70	95
Front shock absorber x Frame	260	19	25
Torque rod x Axle housing	1,450	105	142
Torque rod x Frame	1,450	105	142
Stabilizer bar x Axle housing	260	19	25
Stabilizer x Frame	130	9	13
Wheel nut	1,050	76	103

REAR AXLE AND SUSPENSION

Specifications

7.5 in. Differential 2WD 1/2 ton	Drive pinion bearing preload	at Starting		
		New bearing	12 – 19 kg-cm	10.4 – 16.5 in.-lb 1.2 – 1.9 N·m
		Reused bearing	6 – 10 kg-cm	5.2 – 8.7 in.-lb 0.6 – 1.0 N·m
	Total preload	at Starting	Add drive pinion bearing preload	
		New and reused bearing	4 – 6 kg-cm	3.5 – 5.2 in.-lb 0.4 – 0.6 N·m
	Drive pinion to ring gear backlash		0.13 – 0.18 mm	0.0051 – 0.0071 in.
	Pinion gear to side gear backlash		0.05 – 0.20 mm	0.0020 – 0.0079 in.
	Ring gear runout	Limit	0.07 mm	0.0028 in.
	Companion flange runout	Limit		
		Radial	0.10 mm	0.0039 in.
		Lateral	0.10 mm	0.0039 in.
	Ring gear installing temperature		90 – 110°C	194 – 230°F
	Side gear thrust washer thickness		1.0 mm	0.039 in.
			1.1 mm	0.043 in.
			1.2 mm	0.047 in.
			1.3 mm	0.051 in.
	Drive pinion adjusting plate washer thickness		2.24 mm	0.0882 in.
			2.27 mm	0.0894 in.
			2.30 mm	0.0906 in.
			2.33 mm	0.0917 in.
			2.36 mm	0.0929 in.
			2.39 mm	0.0941 in.
			2.42 mm	0.0953 in.
			2.45 mm	0.0965 in.
			2.48 mm	0.0976 in.
			2.51 mm	0.0988 in.
			2.54 mm	0.1000 in.
			2.57 mm	0.1012 in.
			2.60 mm	0.1024 in.
			2.63 mm	0.1035 in.
			2.66 mm	0.1047 in.
			2.69 mm	0.1059 in.
			2.72 mm	0.1071 in.

Specifications (Cont'd)

8.0 in. Differential 1 ton, C & C and 4WD	Drive pinion bearing preload	at Starting	
	New bearing		19 – 26 kg-cm 16.5 – 22.6 in.-lb 1.9 – 2.5 N·m
	Reused bearing		9 – 13 kg-cm 7.8 – 11.3 in.-lb 0.9 – 1.3 N·m
	Total preload	at Starting	Add drive pinion bearing preload
	New and resued bearing		4 – 6 kg-cm 3.5 – 5.2 in.-lb 0.4 – 0.6 N·m
	Drive pinion to ring gear backlash		0.13 – 0.18 mm 0.0051 – 0.0071 in.
	Pinion gear to side gear backlash		0.05 – 0.20 mm 0.0020 – 0.0079 in.
	Ring gear runout	Limit	0.10 mm 0.0039 in.
	Companion flange runout	Limit	
		Radial	0.10 mm 0.0039 in.
		Lateral	0.10 mm 0.0039 in.
	Ring gear installing temperature		90 – 110°C 194 – 230°F
	Side gear thrust washer thickness		1.6 mm 0.063 in.
			1.7 mm 0.067 in.
			1.8 mm 0.071 in.
	Drive pinion adjusting plate washer thickness		1.70 mm 0.0669 in.
			1.73 mm 0.0681 in.
			1.76 mm 0.0693 in.
			1.79 mm 0.0705 in.
			1.82 mm 0.0717 in.
			1.85 mm 0.0728 in.
			1.88 mm 0.0740 in.
			1.91 mm 0.0752 in.
			1.94 mm 0.0764 in.
			1.97 mm 0.0776 in.
			2.00 mm 0.0787 in.
			2.03 mm 0.0799 in.
			2.06 mm 0.0811 in.
			2.09 mm 0.0823 in.
			2.12 mm 0.0835 in.
			2.15 mm 0.0846 in.
			2.18 mm 0.0858iin.
			2.21 mm 0.0870 in.
			2.24 mm 0.0882 in.
			2.27 mm 0.0894 in.
			2.30 mm 0.0906 in.
			2.33 mm 0.0917 in.

Tightening Torque

Differential	Tightening part		kg-cm	ft-lb	N·m
	Propeller shaft x Companion flange		750	54	74
	Drive pinion x Companion flange	7.5 in.	1,100 – 2,400	80 – 173	108 – 235
		8 in.	2,000 – 3,500	145 – 253	196 – 343
	Ring gear x Differential case		985	71	97
	Bearing cap x Differential carrier		800	58	78
	Differential carrier x Axle housing		260	19	25
Rear axle and suspension	Rear axle housing x Bearing retainer		700	51	69
	Spring center bolt		450	33	44
	Spring U bolt x Axle housing	2WD	1,000	72	98
		4WD	1,250	90	123
	Front spring bracket x Hanger pin		930	67	91
	Rear spring shackle x Leaf spring		930	67	91
	Rear shock absorber x U-bolt seat	2WD	260	19	25
		4WD	650	47	64
	Rear shock absorber x Body	2WD	260	19	25
		4WD	650	47	64

BRAKE SYSTEM

Specifications

Brake	Pedal height (from asphalt sheet)		144 – 149 mm	5.67 – 5.87 in.
	Pedal freeplay		3 – 6 mm	0.12 – 0.24 in.
	Pedal reserve distance (from asphalt sheet)	at 50 kg (110 lb)		
		2WD 1/2 ton	More than 65 mm (2.56 in.)	
		1 ton, C & C	More than 55 mm (2.17 in.)	
		4WD	More than 60 mm (2.36 in.)	
Brake booster	Booster push rod to piston clearance			
		at Idling vacuum	0.1 – 0.5 mm	0.004 – 0.020 in.
		at No vacuum	0.60 – 0.65 mm	0.024 – 0.026 in.
		w/SST	0 mm	0 in.
Front brake (PD60 Type disc) (2WD)	Disc thickness	STD	25.0 mm	0.984 in.
		Limit	24.0 mm	0.945 in.
	Disc runout	Limit	0.15 mm	0.0059 in.
	Pad thickness	STD	10.0 mm	0.394 in.
		Limit	1.0 mm	0.039 in.
Front brake (FS-17 Type disc) (2WD)	Disc thickness	STD	22.0 mm	0.866 in.
		Limit	21.0 mm	0.827 in.
	Disc runout	Limit	0.15 mm	0.0059 in.
	Pad thickness	STD	10.0 mm	0.394 in.
		Limit	1.0 mm	0.039 in.
Front brake (S–12+8 Type disc) (4WD)	Disc thickness	STD	12.5 mm	0.492 in.
		Limit	11.5 mm	0.453 in.
	Disc runout	Limit	0.15 mm	0.0059 in.
	Pad thickness	STD	9.7 mm	0.382 in.
		Limit	1.0 mm	0.039 in.
Rear brake (Drum)	Drum inner diameter	STD	254.0 mm	10.000 in.
		Limit	256.0 mm	10.079 in.
	Lining thickness	STD	5.0 mm	0.197 in.
		Limit	1.0 mm	0.039 in.
Parking brake	Lever travel at 20 kg (44 lb)	2WD	10 – 16 clicks	
		4WD	7 – 15 clicks	

Tightening Torque

Tightening part		kg-cm	ft-lb	N·m
Brake booster clevis lock nut		260	19	25
Brake booster x Pedal bracket		130	9	13
Master cylinder x Brake booster		130	9	13
Master cylinder fluid outlet plug	16 mm	450	33	44
	18 mm	685	50	67
Piston stopper bolt x Master cylinder		100	7	10
Brake tube union nut x Master cylinder		155	11	15
Disc brake cylinder x Torque plate	(2WD) FS17	900	65	88
	PD60	400	29	39
Torque plate x Steering knuckle	(2WD)	1,100	80	108
Disc Brake cylinder x Steering knuckle	(4WD)	900	65	88
Brake tube union nut		155	11	15
Bleeder plug		110	8	11
Front disc x Front axle hub	(2WD)	650	47	64
	(4WD)	475	34	47
Flexible hose bracket x Disc brake cylinder	(2WD)	185	13	18
Drum brake backing plate x Rear axle housing		700	51	69
Rear brake wheel cylinder x Backing plate (Leading-trailing type — 2WD 1/2 ton)		100	7	10
Rear brake wheel cylinder x Backing plate (Duo-servo type — 4WD, 2WD 1 ton)		145	10	14
Rear brake bleeder plug		110	8	11
Brake tube x Wheel cylinder		155	11	15
Bellcrank bracket x Backing plate		130	9	13
LSP & BV (LSPV) bracket x Frame		195	14	19
LSP & BV (LSPV) x LSP & BV (LSPV) bracket		130	9	13
LSP & BV (LSPV) spring x LSP & BV (LSPV) bracket		185	13	18
LSP & BV (LSPV) spring x Shackle		185	13	18
LSP & BV (LSPV) shackle lock nut		250	18	25
LSP & BV (LSPV) shackle x Shackle bracket		130	9	13
LSP & BV (LSPV) shackle bracket x Rear axle housing		195	14	19

STEERING

Specifications

Steering	Steering wheel freeplay		Less than 30 mm (1.18 in.)
	Joint radial play		Less than 0.06 mm (0.0024 in.)
	Bearing block width	Punch mark	
		Yes	15.97 – 16.00 mm 0.6287 – 0.6299 in.
		No	16.00 – 16.03 mm 0.6299 – 0.6311 in.
	Spider axial play		Less than 0.05 mm (0.0020 in.)
	Hole snap ring thickness	Color	
		None	1.175 – 1.225 mm 0.0463 – 0.0482 in.
		Brown	1.225 – 1.275 mm 0.0482 – 0.0502 in.
		Blue	1.275 – 1.325 mm 0.0502 – 0.0522 in.
Steering gear housing (2WD)	Gear housing oil level		18 – 28 mm (0.71 – 1.10 in.) from top
	Sector shaft thrust clearance		Less than 0.05 mm (0.0020 in.)
	Thrust washer thickness		2.00 mm 0.0787 in.
			2.04 mm 0.0803 in.
			2.08 mm 0.0819 in.
			2.12 mm 0.0835 in.
			2.16 mm 0.0850 in.
			2.20 mm 0.0866 in.
	Worm bearing preload	at Starting	3.0 – 5.0 kg-cm
			2.6 – 4.3 in.-lb 0.3 – 0.5 N·m
	Total preload	at Starting	8.0 – 10.5 kg-cm
			6.9 – 9.1 in.-lb 0.8 – 1.0 N·m
Steering gear housing (4WD)	Gear housing oil level		12 – 17 mm (0.47 – 0.67 in.) from top
	Sector shaft thrust clearance		Less than 0.05 mm (0.0020 in.)
	Thrust washer thickness		2.00 mm 0.0787 in.
			2.05 mm 0.0807 in.
			2.10 mm 0.0827 in.
			2.15 mm 0.0846 in.
			2.20 mm 0.0866 in.
	Sector shaft outer diameter	Limit	31.95 mm 1.2579 in.
	Sector shaft oil clearance	Limit	0.10 mm 0.0039 in.
	End cover shim thickness		0.05 mm 0.0020 in.
			0.06 mm 0.0024 in.
			0.07 mm 0.0028 in.
			0.08 mm 0.0031 in.
			0.09 mm 0.0035 in.
			0.10 mm 0.0039 in.
			0.20 mm 0.0079 in.
			0.50 mm 0.0197 in.
	Worm bearing preload	at Starting	3.5 – 6.5 kg-cm
			3.0 – 5.6 in.-lb 0.3 – 0.6 N·m
	Total preload	at Starting	8.0 – 11.0 kg-cm
			6.9 – 9.5 in.-lb 0.8 – 1.1 N·m

Specifications (Cont'd)

Power steering	Drive belt tension [w/ Nippondenso BTG-20 (95506-00020) or Borroughs drive belt tension gauge No. BT-33-73F]	New belt	125 ± 25 lb
		Used belt	80 ± 20 lb
	Maximum rise of oil level		5 mm 0.20 in.
	Oil pressure (at Idle speed)	2WD	More than 75 kg/cm² (1,067 psi, 7,355 kPa)
		4WD	More than 65 kg/cm² (924 psi, 6,374 kPa)
	Steering effort	at steering wheel	Less than 4 kg (8.8 lb, 39 N)
	Vane plate Height	Limit	7.8 mm 0.307 in.
	Thickness	Limit	1.7 mm 0.067 in.
	Length	Limit	14.97 mm 0.5894 in.
	Vane plate to rotor groove clearance	Limit	0.06 mm 0.0024 in.
	Vane plate length Rotor and cam ring mark	None	14.996 – 14.998 mm 0.5904 – 0.5905 in.
		1	14.994 – 14.996 mm 0.5903 – 0.5904 in.
		2	14.992 – 14.994 mm 0.5902 – 0.5903 in.
		3	14.990 – 14.992 mm 0.59016 – 0.59024 in.
		4	14.988 – 14.990 mm 0.5901 – 0.5902 in.
	Shaft to bushing clearance	STD	0.01 – 0.03 mm 0.0004 – 0.0012 in.
		Limit	0.07 mm 0.0028 in.
	Flow control spring length	STD	50.0 mm 1.969 in.
		Limit	47.0 mm 1.850 in.
	Pump rotating torque		Less than 2.8 kg-cm (2.4 in.-lb, 0.3 N·m)
	Cross shaft adjusting screw end play		0.03 – 0.05 mm 0.0012 – 0.0020 in.
	Ball clearance	STD	0.02 – 0.06 mm 0.0008 – 0.0024 in.
		Limit	0.15 mm 0.0059 in.
	Worm bearing preload	at Starting	4.0 – 6.5 kg-cm
			3.5 – 5.6 in.-lb 0.4 – 0.6 N·m
	Total preload	at Starting	Add worm bearing preload
			2.0 – 3.0 kg-cm
			1.7 – 2.6 in.-lb 0.2 – 0.3 N·m
Tilt steering	Collar No. 1 outer diameter		17.989 – 17.996 mm 0.7082 – 0.7085 in.
			17.996 – 18.003 mm 0.7085 – 0.7088 in.
			18.003 – 18.010 mm 0.7088 – 0.7091 in.
			18.010 – 18.017 mm 0.7091 – 0.7093 in.
			18.017 – 18.024 mm 0.7093 – 0.7096 in.
	Collar No. 2 outer diameter		17.982 – 18.000 mm 0.7080 – 0.7087 in.
			18.000 – 18.018 mm 0.7087 – 0.7094 in.
	Tilt steering support shim thickness		0.2 mm 0.008 in.
			0.5 mm 0.020 in.
			0.8 mm 0.031 in.
			1.4 mm 0.055 in.
			1.8 mm 0.071 in.

Tightening Torque

Steering	Tightening part	kg-cm	ft-lb	N·m
	Steering wheel x Steering main shaft	350	25	34
	Column tube x Instrument panel	260	19	25
	Flexible coupling x Steering main shaft	260	19	25
	Flexible coupling x Steering intermediate shaft	260	19	25
	Flexible coupling x Worm shaft (2WD)	260	19	25
	(4WD)	375	27	37
	Steering main shaft x Steering intermediate shaft	375	27	37
	Column tube x Upper bracket	55	48 in.-lb	5.4
	Column tube x Column tube bracket	195	14	19
Tilt steering	Tilt steering pawl set bolt	185	13	18
	Tilt lever retainer	185	13	18
	Castle nut (Support x Column bracket)	225	16	22
	Upper bracket x Tile steering support	80	69 in.-lb	7.8
	Column bracket x Column tube	185	13	18
	Main shaft x Intermediate shaft	260	19	25
Steering gear housing (2WD)	Worm bearing adjusting screw lock nut	1,500	108	147
	End cover x Gear housing	185	13	18
	Sector shaft adjusting screw lock nut	250	18	25
	Gear housing x Body	660	48	65
Steering gear housing (4WD)	End cover x Gear housing	400	29	39
	Sector shaft adjusting screw lock nut	425	31	42
	Gear housing x Body	575	42	56
Power steering	Pressure port union x Rear housing	700	51	69
	Front housing x Rear housing	470	34	46
	Union x Rear housing	130	9	13
	Vane pump x Bracket	400	29	39
	Pressure tube x Vane pump	450	33	44
	Pump pulley x Rotor shaft	440	32	43
	Worm adjusting screw lock nut	500	36	49
	Gear housing x Valve housing	470	34	46
	End cover x Gear housing	470	34	46
	Cross shaft adjusting screw lock nut	470	34	46
	Pressure and return line x Valve housing	450	33	44
Steering linkage (2WD)	Pitman arm x Gear housing	1,250	90	123
	Pitman arm x Relay rod	920	67	90
	Tie rod clamp bolt	260	19	25
	Tie rod x Relay rod	920	67	90
	Tie rod x Knuckle arm	920	67	90
	Relay rod x Idler arm	600	43	59
	Knuckle arm x Steering knuckle	1,100	80	108
	Steering damper x Body	130	9	13
	Steering damper x Tie rod	600	43	59
	Idler arm x Body	660	48	65
	Idler arm x Idler arm bracket	800	58	78
Steering linkage (4WD)	Pitman arm x Gear housing	1,750	127	172
	Tie rod x Knuckle arm	930	67	91
	Tie rod x Steering damper	600	43	59
	Tie rod clamp bolt	375	27	37
	Steering damper x Front axle housing	130	9	13

WINCH

Specifications

Winch	Clutch outer race bushing bore				
			STD	12.00 mm	(0.4724 in.)
			Limit	12.15 mm	(0.4783 in.)
	Gear case bushing bore				
			STD	12.00 mm	(0.4724 in.)
			Limit	12.15 mm	(0.4783 in.)
	Thrust bushing thickness				
		No. 1	STD	2.0 mm	(0.079 in.)
			Limit	1.7 mm	(0.067 in.)
		No. 2	STD	1.0 mm	(0.039 in.)
			Limit	0.8 mm	(0.031 in.)
	Drum bushing bore				
		A	STD	83.00 mm	(3.2677 in.)
			Limit	83.08 mm	(3.2709 in.)
		B	STD	80.00 mm	(3.1496 in.)
			Limit	80.08 mm	(3.1527 in.)
	Thrust bushing thickness				
			STD	1.5 mm	(0.059 in.)
			Limit	1.0 mm	(0.039 in.)
	Thrust washer thickness				
			STD	2.0 mm	(0.079 in.)
			Limit	1.6 mm	(0.063 in.)
Motor	Brush	Length	STD	16.0 mm	(0.630 in.)
			Limit	10.5 mm	(0.413 in.)
	Spring installed load		STD	1.6 kg	(3.5 lb)
			Limit	1.0 kg	(2.2 lb)
	Commutator				
	Outer diameter		STD	28.0 mm	(1.102 in.)
			Limit	27.0 mm	(1.063 in.)
	Undercut depth		STD	0.5 – 0.8 mm	(0.020 – 0.032 in.)
			Limit	0.2 mm	(0.008 in.)
	Circle runout		Limit	0.4 mm	(0.157 in.)

Tightening Torque

Tightening part	kg-cm	ft-lb	N·m
Ring gear x Gear case	195	14	19
Drum plate x Gear case	195	14	19
Commutator end frame x Gear case	195	14	19
Bracket x Gear case	930	67	91
Bracket x Drum plate x Wire guide	190	14	19
Filler and Drain plug	175	13	17

LUBRICANTS

Item	Capacity			Classification
	Liters	US qts	Imp. qts	
Engine oil				API grade SF or SF/CC multigrade, fuel efficient and recommended viscosity oil
Drain and refill				
w/o Oil filter change	4.0	4.2	3.5	
w/ Oil filter change	4.6	4.9	4.0	
Dry fill	4.8	5.1	4.2	
Manual transmission oil				
(2WD) W46, W55, W56	2.4	2.5	2.1	API GL-4 or GL-5
(4WD) W56	3.0	3.2	2.6	SAE 75W-90
G52	3.9	4.1	3.4	
A/T fluid				ATF DEXRON II
Dry fill	6.5	6.9	5.7	
Drain and refill	2.4	2.5	2.1	
Transfer oil	1.6	1.7	1.4	API GL-4 or GL-5, SAE 75W-90
Differential oil				API GL-5 hypoid gear oil
(2WD) 1/2 ton	1.7	1.8	1.5	Above –18°C (0°F)
1 ton and C & C	1.8	1.9	1.6	SAE 90
(4WD) Front	2.3	2.4	2.0	Below –18°C (0°F)
Rear	2.2	2.3	1.9	SAE 80W-90 or 80W
Steering gear box oil				API GL-4, SAE 90
(2WD)	380 – 400 cc	23.2 – 24.4 cu in.		
(4WD)	580 cc	35.4 cu in.		
Power steering fluid				ATF DEXRON or DEXRON II
Pump	300 cc	18.3 cu in.		
Total	850 cc	51.9 cu in.		
Winch gear oil	200 cc	12.2 cu in.		ATF DEXRON II
Ball joint grease (2WD)	–			Molybdenum disulphide lithium base, NLGI No. 1 or No. 2
Chassis grease (4WD)				
Propeller shaft (Except double cardan joint)				Lithium base, NLGI No. 2
Double cardan joint				Molybdenum disulphide lithium base, NLGI No. 2
Drag link ends	–			Lithium base, NLGI No. 1
Wheel bearing grease	–			Lithium base multipurpose, NLGI No. 2
Steering knuckle and front axle shaft grease (4WD)	–			Molybdenum disulphide lithium base, NLGI No. 2
Brake fluid	–			SAE J1703, DOT 3

STANDARD BOLT TIGHTENING TORQUE

Page

STANDARD BOLT TIGHTENING TORQUE B-2

STANDARD BOLT TIGHTENING TORQUE

HOW TO DETERMINE BOLT STRENGTH

<table>
<tr><th></th><th>Mark</th><th>Class</th><th></th><th>Mark</th><th>Class</th></tr>
<tr><td rowspan="2">Hexagon head bolt</td><td>

Bolt head No. 4 — 5 — 6 — 7 —</td><td>4T
5T
6T
7T</td><td rowspan="2">Stud bolt</td><td rowspan="2">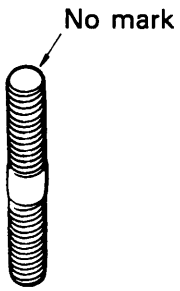
</td><td rowspan="2">4T</td></tr>
<tr><td>
No mark</td><td>4T</td></tr>
<tr><td>Hexgon flange bolt
w/washer hexagon bolt</td><td>
No mark</td><td>4T</td><td rowspan="2"></td><td rowspan="2">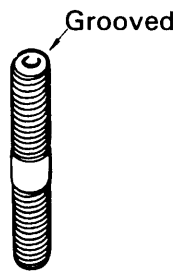
</td><td rowspan="2">6T</td></tr>
<tr><td>Hexagon head bolt</td><td>
Two protruding lines</td><td>5T</td></tr>
<tr><td>Hexagon flange bolt
w/washer hexagon bolt</td><td>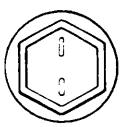
Two protruding lines</td><td>6T</td><td rowspan="2">Welded bolt</td><td rowspan="2">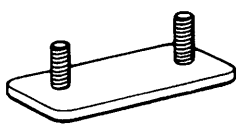</td><td rowspan="2">4T</td></tr>
<tr><td>Hexagon head bolt</td><td>
Three protruding lines</td><td>7T</td></tr>
</table>

SPECIFIED TORQUE FOR STANDARD BOLTS

Class	Diameter mm	Pitch mm	Tightening torque					
			Hexagon head bolt			Hexagon flange bolt		
			kg-cm	ft-lb	N·m	kg-cm	ft-lb	N·m
4T	6	1	55	48 in.-lb	5.4	60	52 in.-lb	5.9
	8	1.25	130	9	13	145	10	14
	10	1.25	260	19	25	290	21	28
	12	1.25	480	35	47	540	39	53
	14	1.5	760	55	75	850	61	83
	16	1.5	1,150	83	113		—	
5T	6	1	65	56 in.-lb	6.4		—	
	8	1.25	160	12	16		—	
	10	1.25	330	24	32		—	
	12	1.25	600	43	59		—	
	14	1.5	930	67	91		—	
	16	1.5	1,400	101	137		—	
6T	6	1	80	69 in.-lb	7.8	90	78 in.-lb	8.8
	8	1.25	195	14	19	215	16	21
	10	1.25	400	29	39	440	32	43
	12	1.25	730	53	72	810	59	79
	14	1.5		—		1,250	90	123
7T	6	1	110	8	11	120	9	12
	8	1.25	260	19	25	290	21	28
	10	1.25	530	38	52	590	43	58
	12	1.25	970	70	95	1,050	76	103
	14	1.5	1,500	108	147	1,700	123	167
	16	1.5	2,300	166	226		—	

SST AND SSM

	Page
SST (SPECIAL SERVICE TOOLS)	C-2
SSM (SPECIAL SERVICE MATERIALS)	C-9

SST (SPECIAL SERVICE TOOLS)

Illustration • Part No. • Part Name	EM	EC	FI	FU	LU	ST	CH	CL	MT	AT	TF	PR	FA	RA	BR	SR	BO	WI
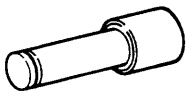 09201-31010 (Valve Stem Oil Seal Replacer)																		●
 09201-60011 (Valve Stem Guide Remover & Replacer)	●								●	●	●							
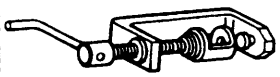 09202-43013 (Valve Spring Compressor)	●																	
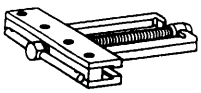 09213-27010 (Gear Remover)									●									
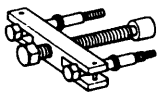 09213-31021 (Crankshaft Pulley Puller)	●																	
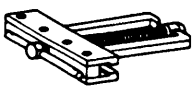 09213-36020 (Timing Gear Remover)	●								●									
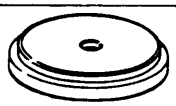 09218-56030 (Cylinder Liner Remover & Replacer)																		●
 09222-30010 (Connecting Rod Bushing Remover & Replacer)	●																	
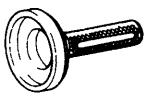 09223-41020 (Crankshaft Rear Oil Seal Replacer)	●																	
 09223-50010 (Crankshaft Front Oil Seal Replacer)					●				●									
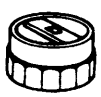 09228-44010 (Oil Filter Wrench)					●									●				
 09236-00101 (Water Pump Overhaul Tool Set)																●		●
 09238-47012 (Water Pump Bearing Remover & Replacer)									●									
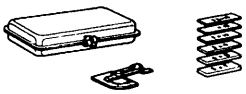 09240-00014 (Carburetor Adjusting Gauge Set)				●														

SST (SPECIAL SERVICE TOOLS) (Cont'd)

Illustration • Part No. • Part Name	EM	EC	FI	FU	LU	ST	CH	CL	MT	AT	TF	PR	FA	RA	BR	SR	BO	WI
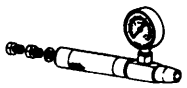 **09258-14010** (Air Pump Tester)		●																
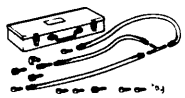 **09268-41045** (Injection Measuring Tool Set)			●															
 **09268-45011** (EFI Fuel Pressure Gauge)			●															
 **09285-76010** (Injection Camshaft Bearing Cone Replacer)						●	●											
 **09286-46011** (Injection Pump Spline Shaft puller)						●	●											●
 **09301-20020** (Clutch Guide Tool)								●										
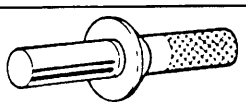 **09302-30031** (Clutch Diaphragm Spring Hight No 3 Gauge)								●										
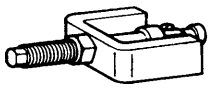 **09303-35011** (Input Shaft Front Bearing Puller)								●										
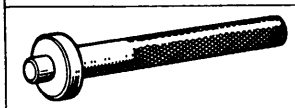 **09304-30012** (Input Shaft Front Bearing Replacer)								●										
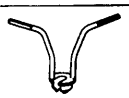 **09305-20012** (Gear Shift Lever Remover)											●							
 **09307-12010** (Extension Housing Bushing Replacer)																●		
 **09307-30010** (Extension Housing Bushing Replacer)										●								
 **09308-00010** (Oil Seal Puller)										●	●	●		●	●		●	

SST (SPECIAL SERVICE TOOLS) (Cont'd)

Illustration • Part No. • Part Name	EM	EC	FI	FU	LU	ST	CH	CL	MT	AT	TF	PR	FA	RA	BR	SR	BO	WI
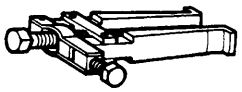 09308-10010 (Oil Seal Puller)									●	●				●				
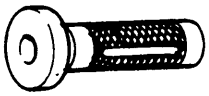 09310-35010 (Countershaft Bearing Replacer)											●							
 09312-20011 (Transmission Gear Remover & Replacer)									●									
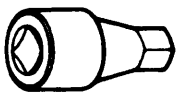 09313-30021 (Detent Ball Plug Socket)									●		●							●
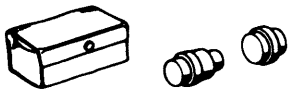 09315-00010 (Clutch Release Bearing Remover & Replacer)								●										
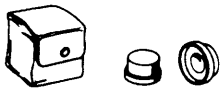 09315-00021 (Clutch Release Bearing Remover & Replacer)								●										
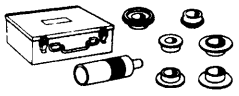 09316-60010 (Transmission & Transfer Bearing Replacer)									●		●							
 09325-12010 (Transmission Oil Plug)									●									
 09325-20010 (Transmission Oil Plug)	●								●	●	●	●						
 09330-00020 (Companion Flange Holding Tool)											●	●		●				
 09332-25010 (Universal Joint Bearing Remover & Replacer)												●						
 09333-00012 (Clutch Diaphragm Spring Aligner)								●										
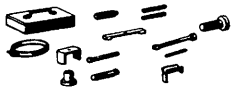 09350-20013 (TOYOTA Automatic Transmission Tool Set)										●								
 09504-00011 (Differential Side Bearing Adjusting Nut Wrench)														●				

SST (SPECIAL SERVICE TOOLS) (Cont'd)

Illustration • Part No. • Part Name	EM	EC	FI	FU	LU	ST	CH	CL	MT	AT	TF	PR	FA	RA	BR	SR	BO	WI
 09506-30011 (Differential Drive Pinion Bearing Cone Replacer)														●				
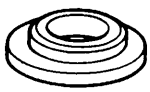 09506-35010 (Differential Drive Pinion Rear Bearing Replacer)									●									
 09515-30010 (Rear Wheel Bearing Replacer)														●				
 09521-25011 (Rear Axle Shaft Puller)														●				
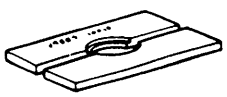 09527-10010 (Rear Axle Shaft Bearing Remover)													●					
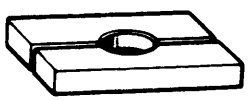 09527-20011 (Rear Axle Shaft Bearing Remover)																●		
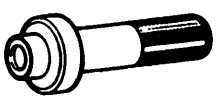 09554-30011 (Differential Oil Seal Replacer)														●				
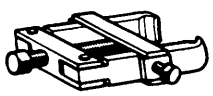 09556-30010 (Drive Pinion Front Bearing Remover)														●				
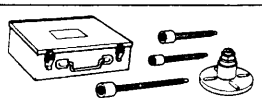 09557-22022 (Companion Flange Remover & Replacer)												●		●				
 09605-60010 (Steering Knuckle Bearing Cup Replacer)													●					
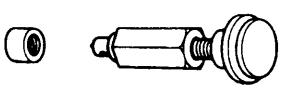 09606-60020 (Steering Knuckle Bearing Cup Remover)													●					
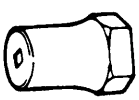 09607-60020 (Front Wheel Adjusting Nut Wrench)													●					
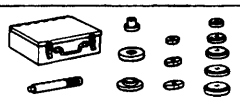 09608-20011 (Front Hub & Drive Pinion Bearing Tool Set)									●									
 09608-30011 (Front Hub & Drive Pinion Bearing Tool Set)													●	●		●		

SST (SPECIAL SERVICE TOOLS) (Cont'd)

Illustration • Part No. • Part Name	EM	EC	FI	FU	LU	ST	CH	CL	MT	AT	TF	PR	FA	RA	BR	SR	BO	WI
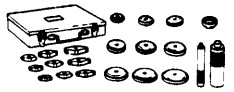 **09608-35013** (Axle Hub & Drive Pinion Bearing Tool Set)									●				●	●		●		
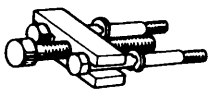 **09609-20011** (Steering Wheel Puller)																●		
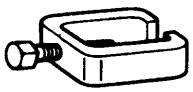 **09610-55012** (Pitman Arm Puller)																●		
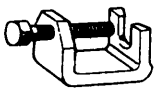 **09611-12010** (Tie Rod End Puller)																●		
 **09611-22012** (Tie Rod End Puller)													●			●		
 **09612-22011** (Tilt Handle Bearing Replacer)																●		
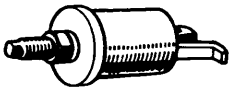 **09612-30012** (Steering Worm Bearing Puller)											●					●		
 **09612-65013** (Steering Worm Bearing Puller)													●			●		
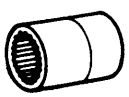 **09616-00010** (Steering Worm Bearing Adjusting Socket)																●		
 **09616-22010** (Steering Worm Bearing Adjusting Screw Wrench)																●		
 **09617-30040** (Worm Bearing Adjusting Screw Lock Nut Wrench)																●		
 **09618-60010** (Front Axle & Drive Shaft Bearing Replacer)													●					
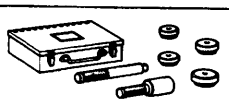 **09620-30010** (Steering Gear Box Replacer Set)																●		
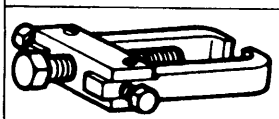 **09628-62011** (Ball Joint Puller)													●			●		

SST (SPECIAL SERVICE TOOLS) (Cont'd)

Illustration • Part No. • Part Name	EM	EC	FI	FU	LU	ST	CH	CL	MT	AT	TF	PR	FA	RA	BR	SR	BO	WI
 09630-00011 (Power Steering Gear Housing Overhaul Tool Set)																●		
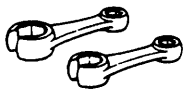 09631-22020 (Power Steering Hose Nut 14 x 17 Wrench)																●		
 09631-60010 (Power Steering Gear Housing Bearing Replacer)																●		
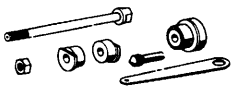 09634-60013 (Steering Knuckle Centering Gauge)													●					
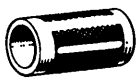 09636-20010 (Upper Ball Joint Dust Cover Replacer)																●		
 09703-30010 (Brake Shoe Return Spring Tool)															●			
 09709-29017 (LSPV Gauge Set)															●			
 09710-30020 (Suspension Bushing Tool Set)													●					
 09717-20010 (Brake Shoe Return Spring Remover)															●			
 09718-00010 (Shoe Hold Down Spring Driver)															●			
 09718-20010 (Brake Shoe Return Spring Replacer)															●			
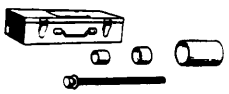 09726-35010 (Front Lower Arm Bushing Remover & Replacer)													●	●				
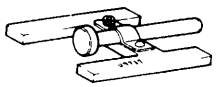 09737-00010 (Brake Booster Push Rod Gauge)															●			
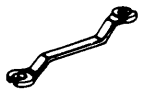 09751-36011 (Brake Tube Union Nut 10 x 12 Wrench)								●					●		●			

SST (SPECIAL SERVICE TOOLS) (Cont'd)

Illustration • Part No. • Part Name	EM	EC	FI	FU	LU	ST	CH	CL	MT	AT	TF	PR	FA	RA	BR	SR	BO	WI
 09812-00010 (Door Hinge Set / Bolt Wrench Set)																	●	
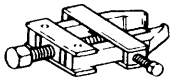 09820-00020 (Alternator Bearing Puller)							●											
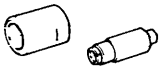 09820-63010 (Alternator Pulley Set Nut Wrench Set)							●											
 09842-14010 (Idle Adjusting Wiring Harness)			●															
 09842-30020 (Wiring "C" EFI Inspection)			●															
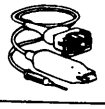 09842-30050 (Wiring "A" EFI Inspection)			●															
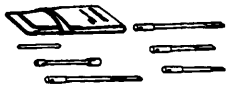 09860-11011 (Carburetor Drive Set)				●														
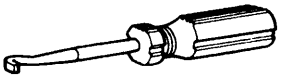 09921-00010 (Spring Tension Tool)									●	●	●							
 09922-00010 (Wrench 5 x 12)				●														
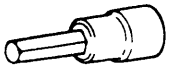 09923-00010 (Hexagon Wrench)									●									
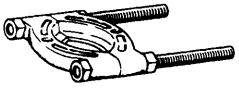 09950-00020 (Bearing Remover)									●		●			●				
 09950-20015 (Universal Puller)									●		●		●	●				
 09992-00093 (Oil Pressure Gauge Set)										●								

SSM (SPECIAL SERVICE MATERIALS)

Part Name	Part No.	Sec.	Use etc.
Seal packing No. 102	08826-00080	EM	Engine oil pan
Anaerobic adhesive	08833-00070	SR	Upper bracket bolt
Windshield glass adhesive set No. 15	08850-00070	BO	Windshield glass [0 – 15°C]
Windshield glass adhesive set No. 35	08850-00080	BO	Windshield glass [15 – 35°C]
Windshield glass adhesive set No. 45	08850-00090	BO	Windshield glass [35 – 45°C]
Dam kit	04562-30030	BO	Windshield glass
Glass sealer	08705-00010	BO	Windshield glass
Butyl tape set	08850-00065	BO	Quarter window glass
Glass sealer	68177-89101	BO	Quarter window glass

AUTOMATIC TRANSMISSION HYDRAULIC CIRCUIT

A43D HYDRAULIC CIRCUIT

A43D "P" RANGE CIRCUIT

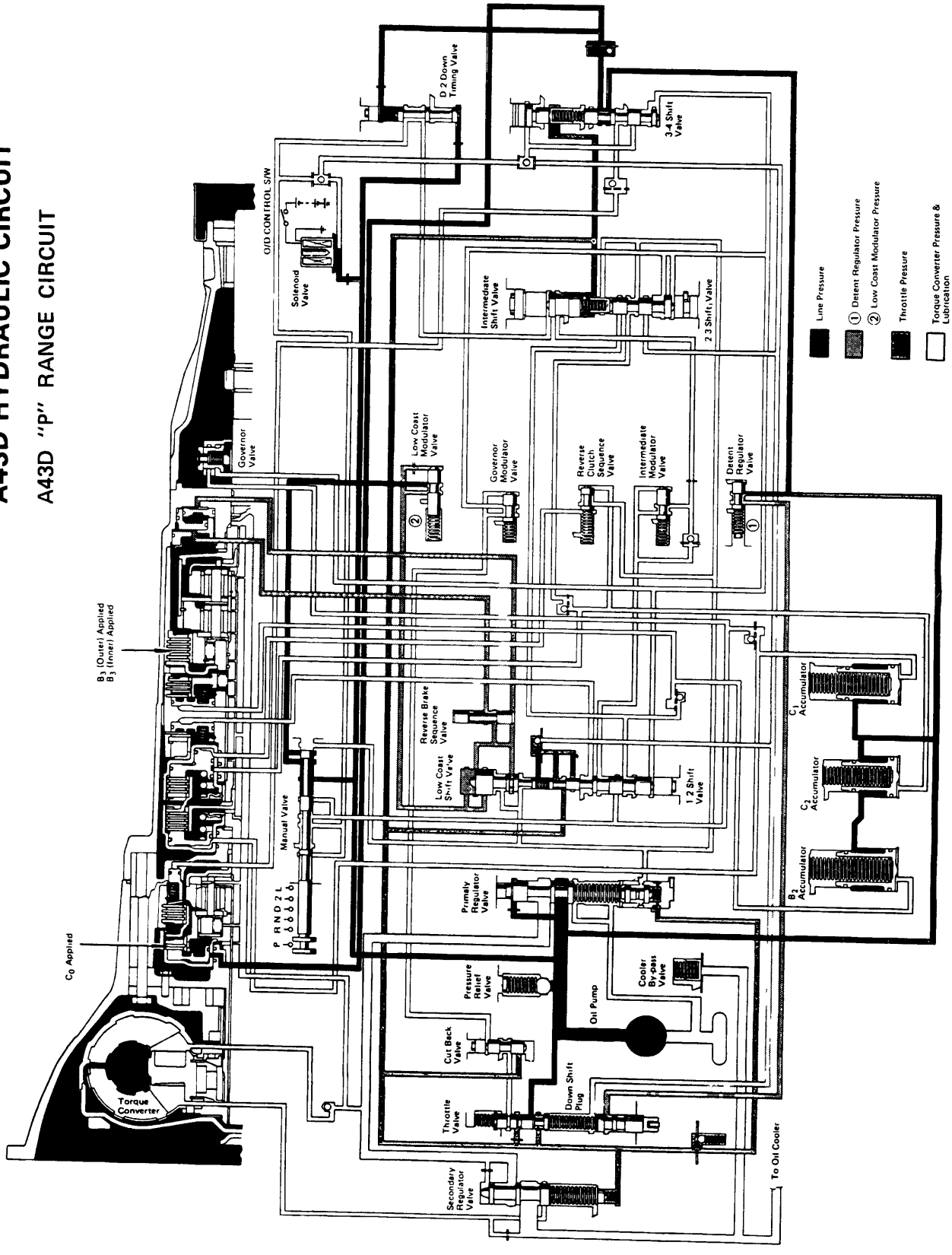

TE0019

A43D "N" RANGE CIRCUIT

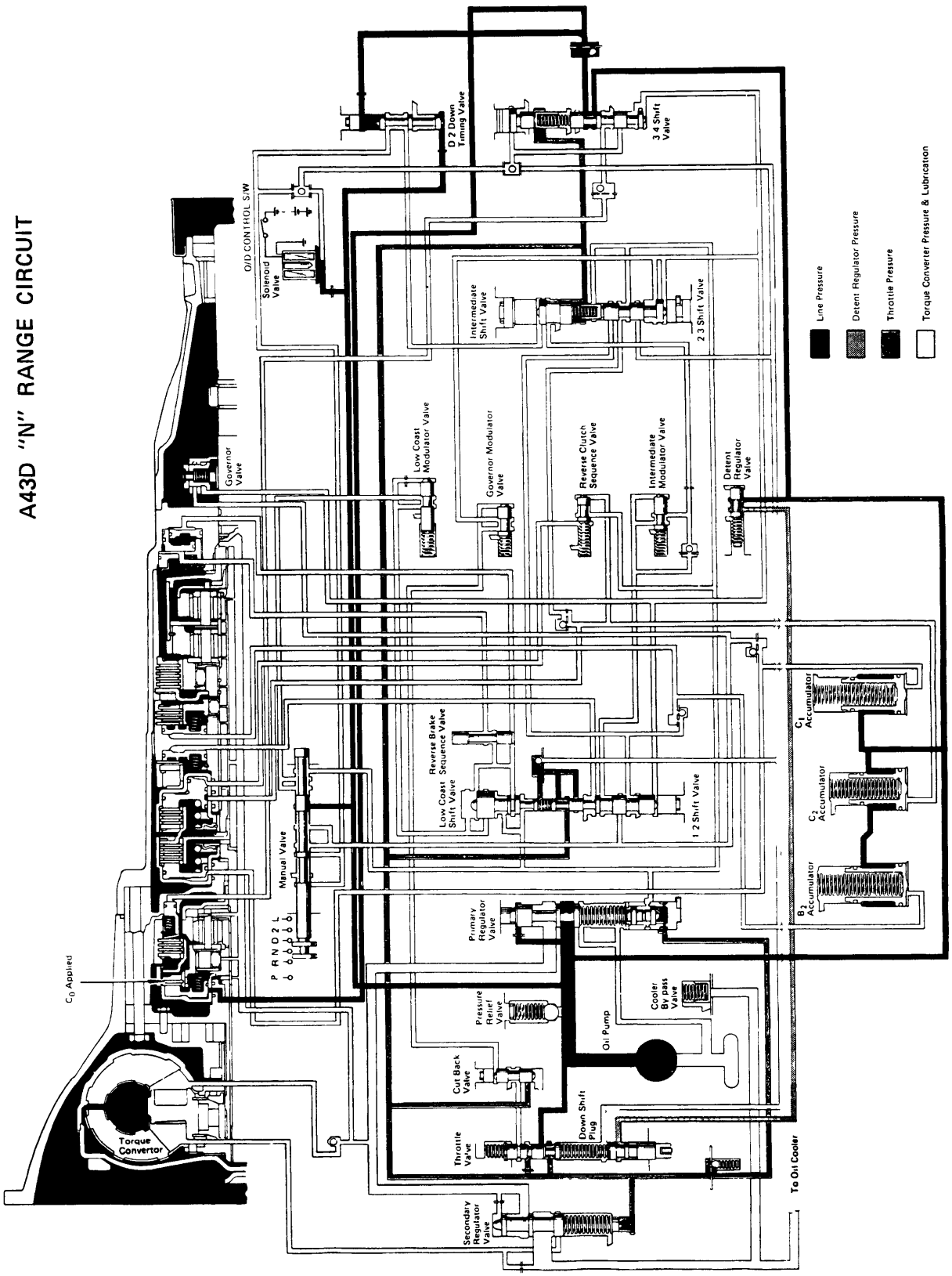

A43D "D" RANGE FIRST GEAR CIRCUIT

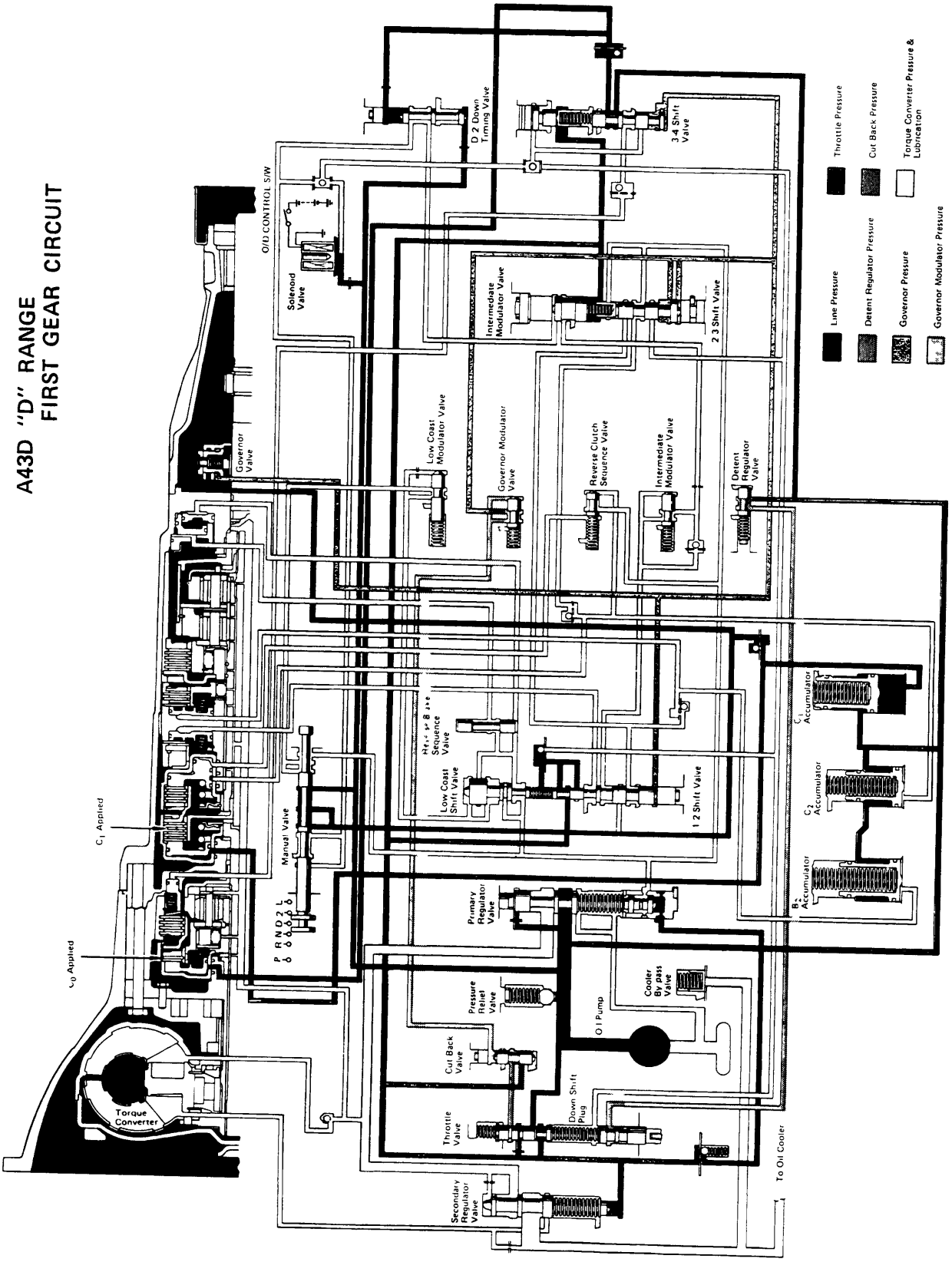

TE0021

A43D "D" RANGE
SECOND GEAR CIRCUIT

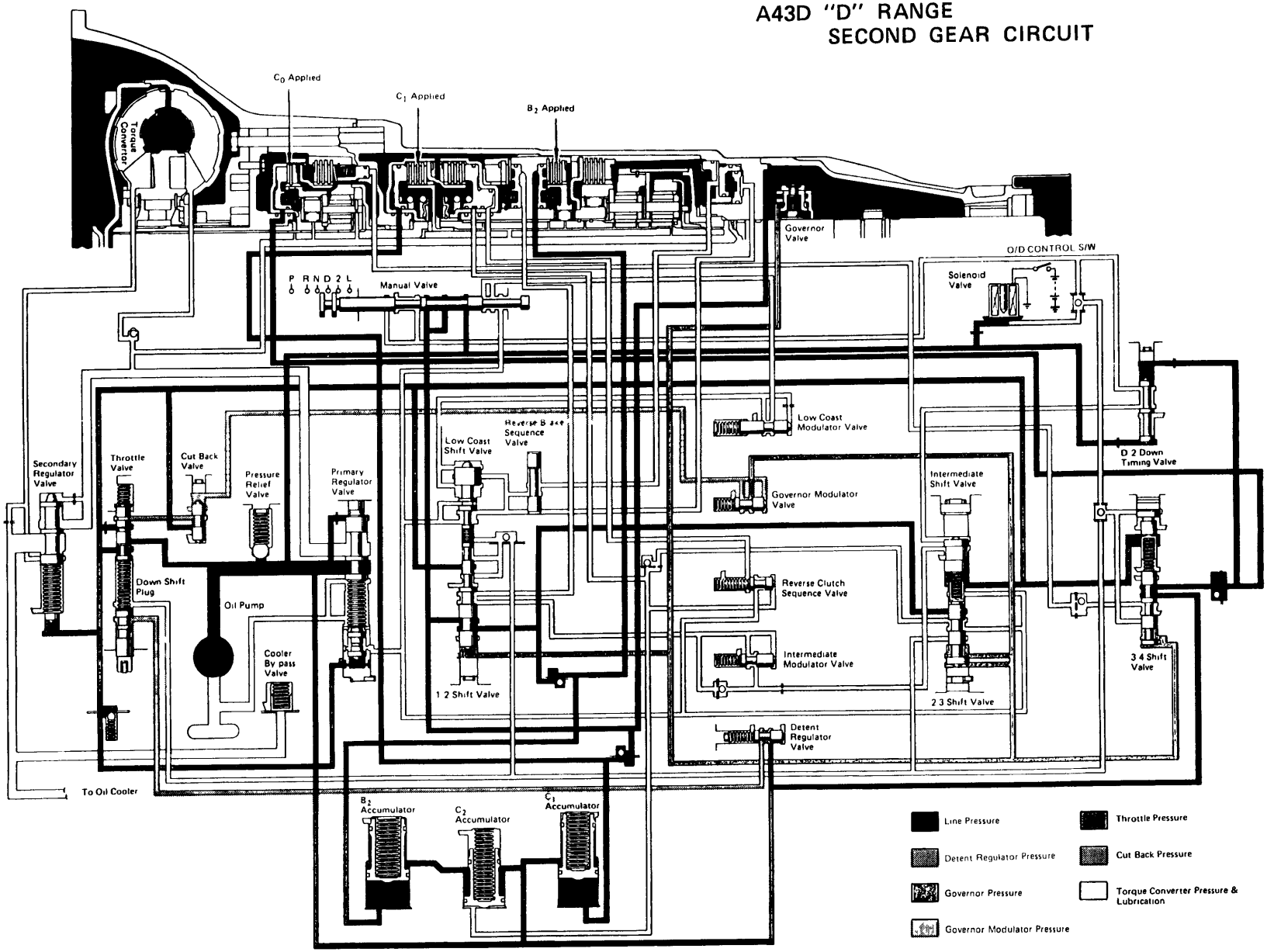

TE0022

A43D "D" RANGE
THIRD GEAR CIRCUIT

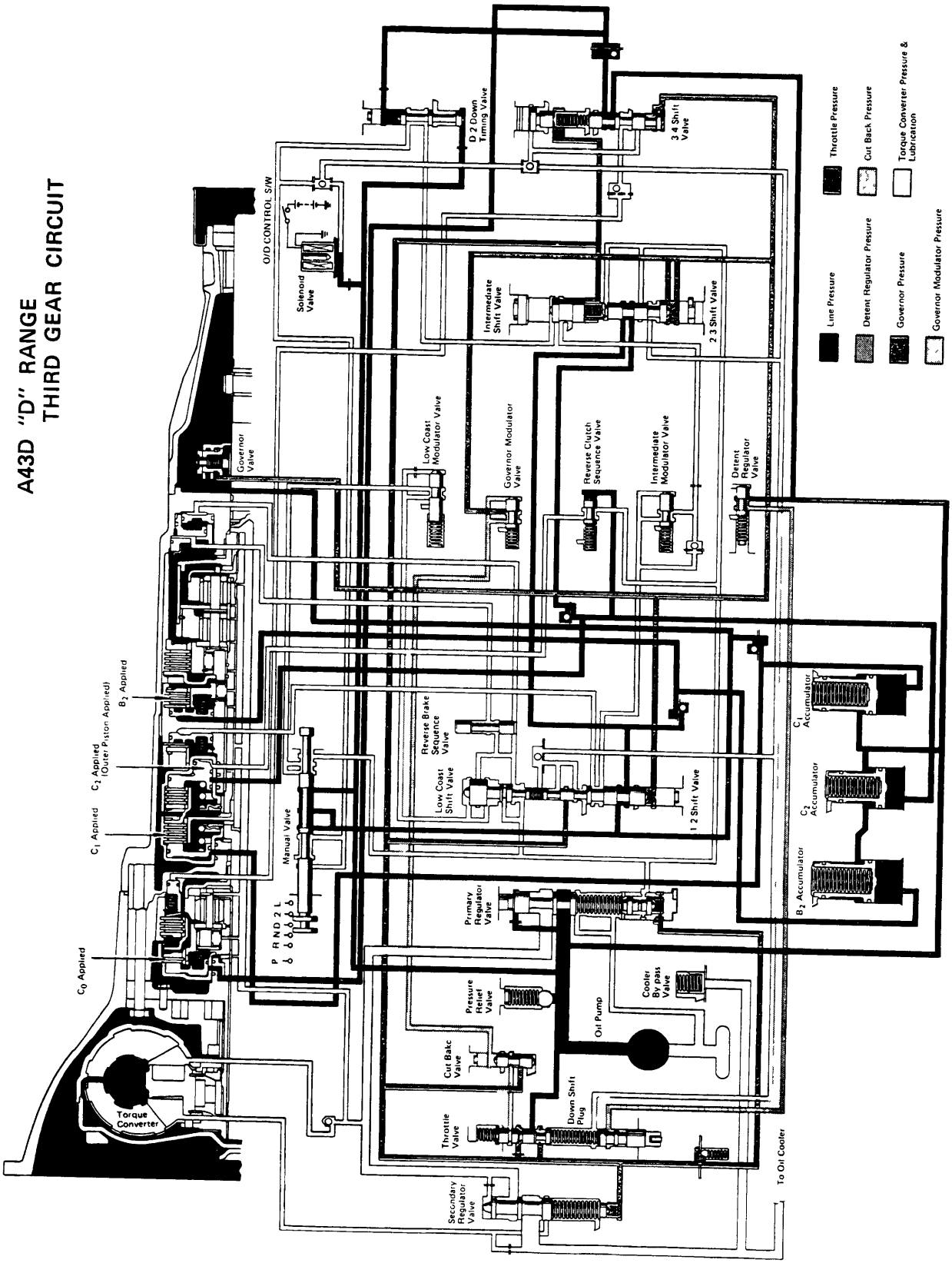

A43D "D" RANGE
OD GEAR CIRCUIT

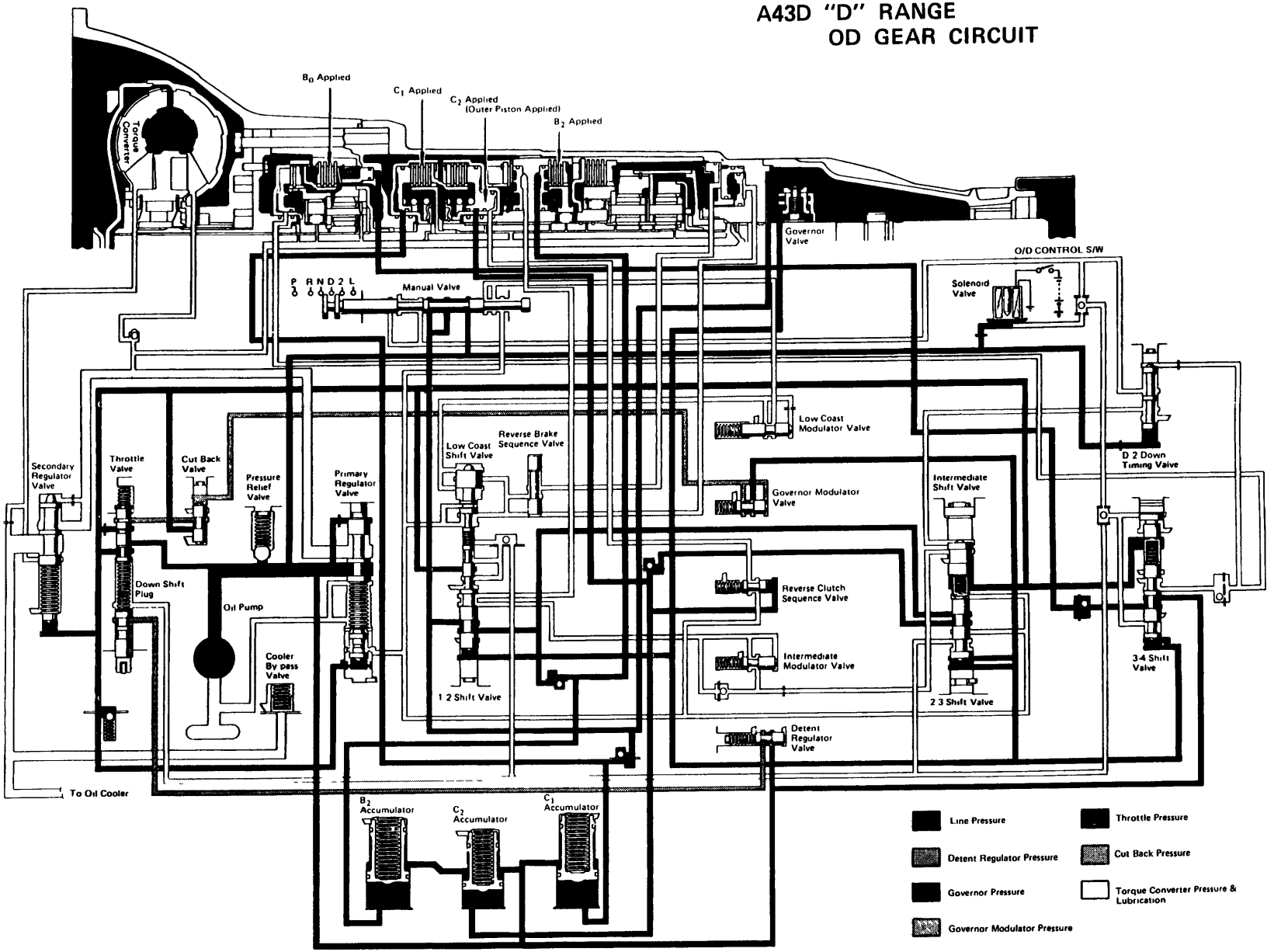

TE0024

A43D "D" RANGE
KICK DOWN (OD → 3) CIRCUIT

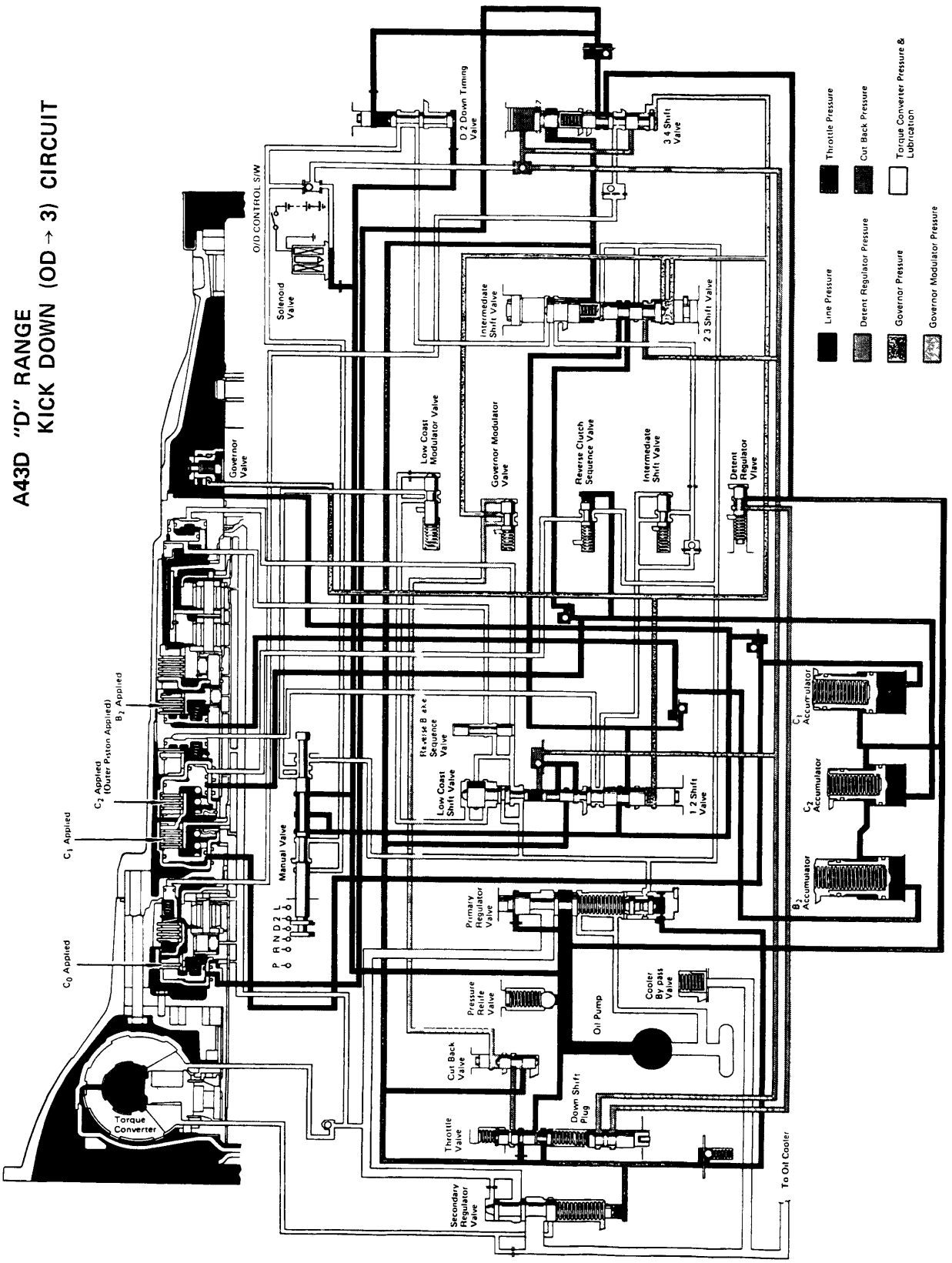

TE0025

A43D "D" RANGE
THIRD GEAR CIRCUIT
(OD Main S/W OFF)

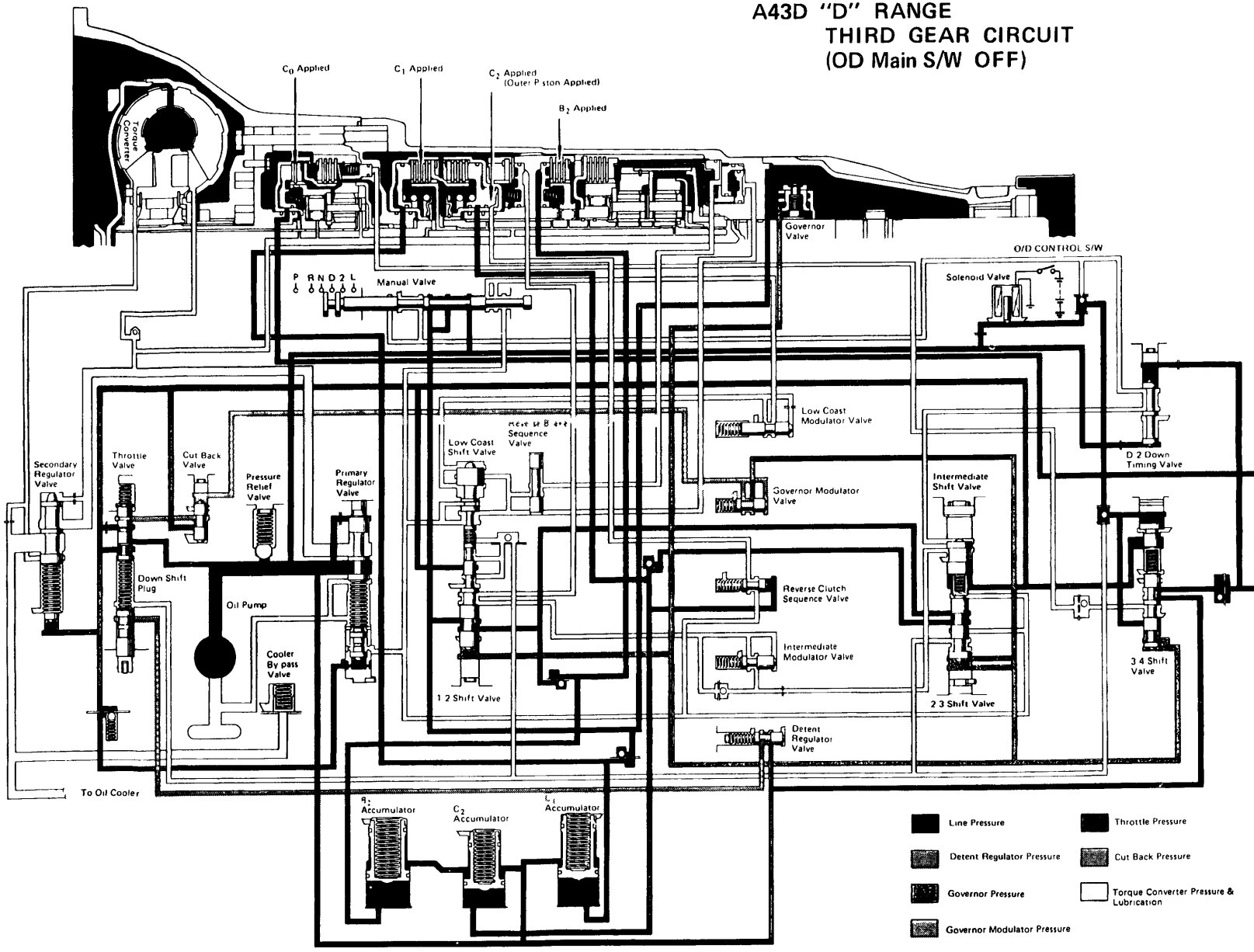

TE0026

A43D "L" RANGE CIRCUIT

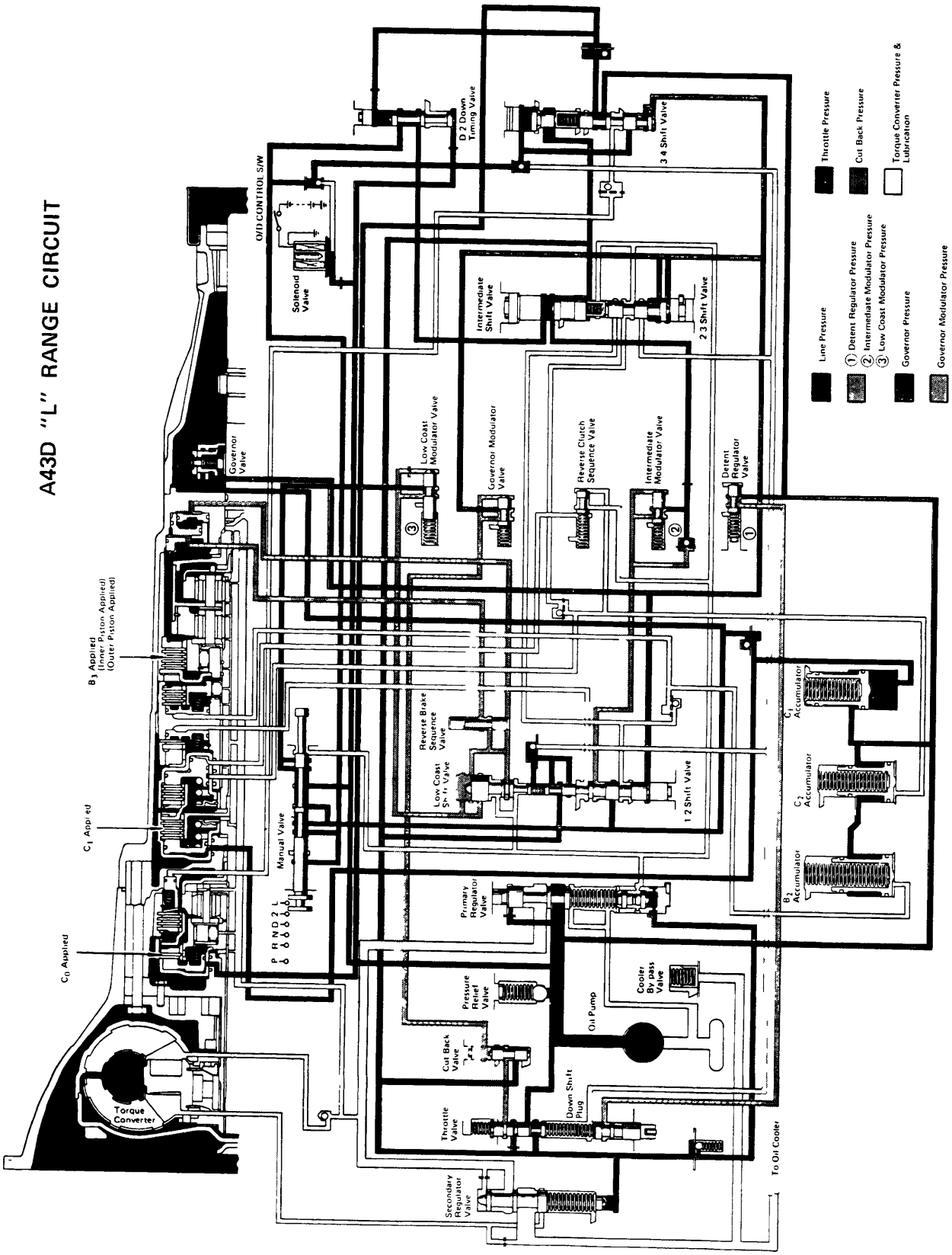

TE0027

A43D "2" RANGE SECOND GEAR CIRCUIT

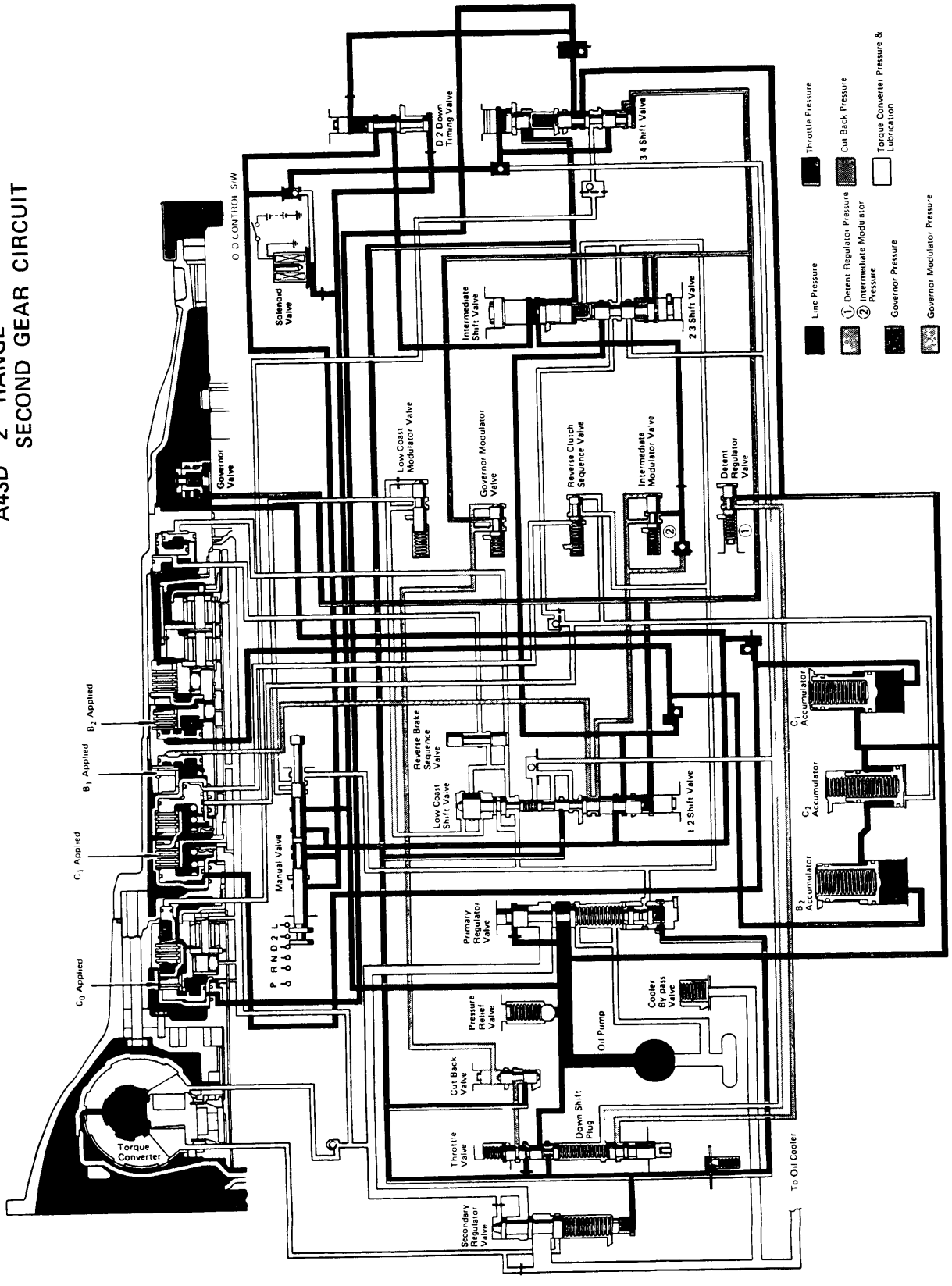

A43D "R" RANGE CIRCUIT

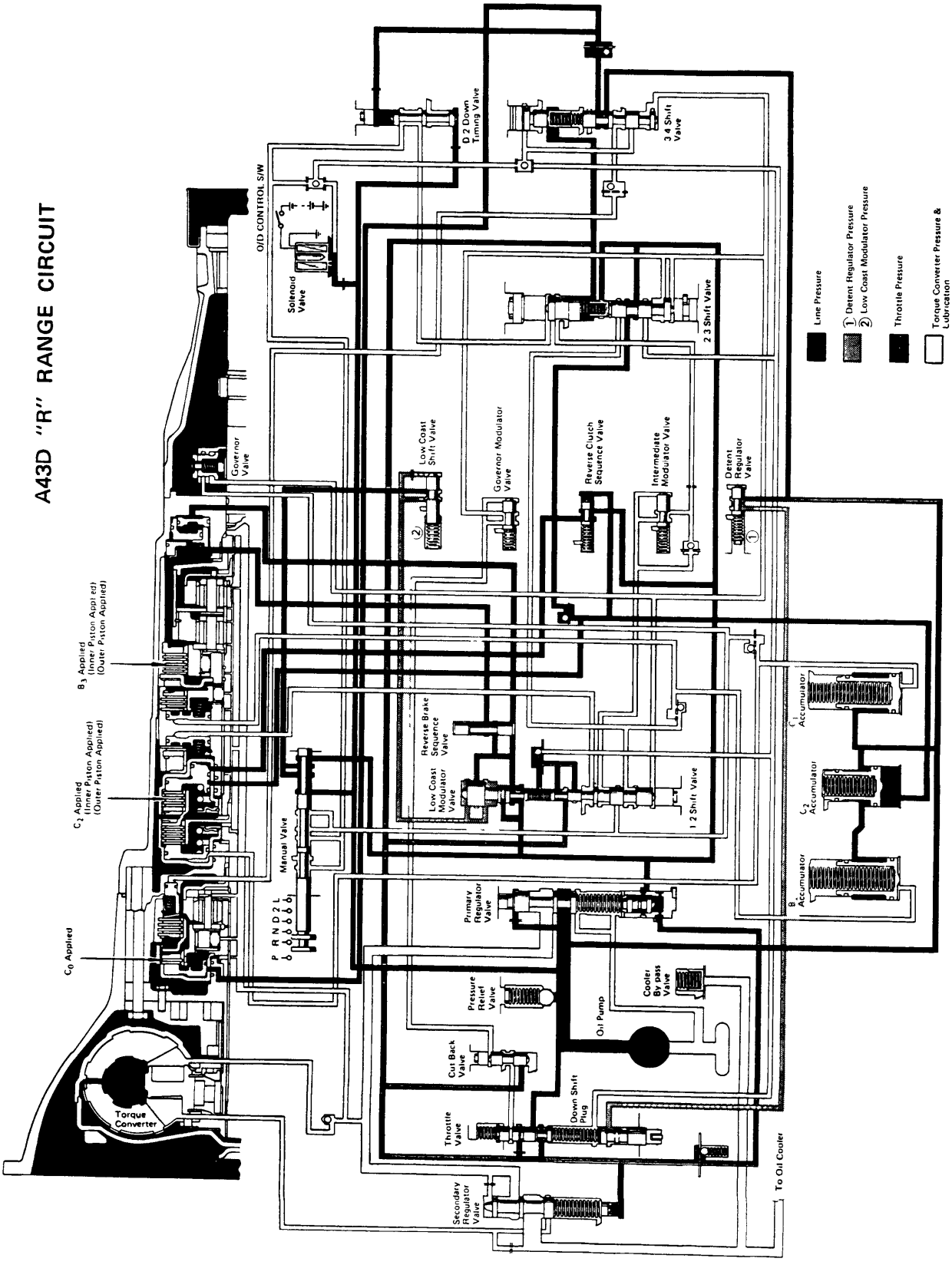

TE0029

ELECTRICAL WIRING DIAGRAMS

SYSTEM INDEX

TOYOTA TRUCK AND 4 RUNNER (GASOLINE) 1985 Model (Page 1 to Page 4)

SYSTEMS	LOCATION	SYSTEMS	LOCATION
Air Conditioner, Cooler and Heater	2-1	Radio and Tape Player	4-7
Auto Antenna	4-7	Rear Air Conditioner	2-3
Back-up Lights	3-1	Rear Window Defogger	3-4
Charging	1-5	Rear Wiper and Washer	2-6
Cigarette Lighter	4-6	Starting	1-1
Clock	4-6	Stop Lights	3-8
Combination Meter	2-7	Taillights and Illumination	4-1
Cruise Control	3-7	Turn Signal and Hazard	3-2
EFI	1-3	Unlock and Seat Belt Warning	3-1
Emission Control	1-7	Winch	3-4
Front Wiper and Washer	3-5	Work Light	4-1
Headlights	4-3		
Horn	3-3		
Ignition	1-2		
Interior Lights	4-4		
Overdrive	3-6		
Power Source	1-1		
Power Windows	2-4		

TOYOTA TRUCK AND 4 RUNNER (GASOLINE) ELECTRICAL WIRING DIAGRAM-1985 Model (Page 1 to Page 4)

Power Source | Starting | Ignition | EFI

1 | 2 | 3 | 4

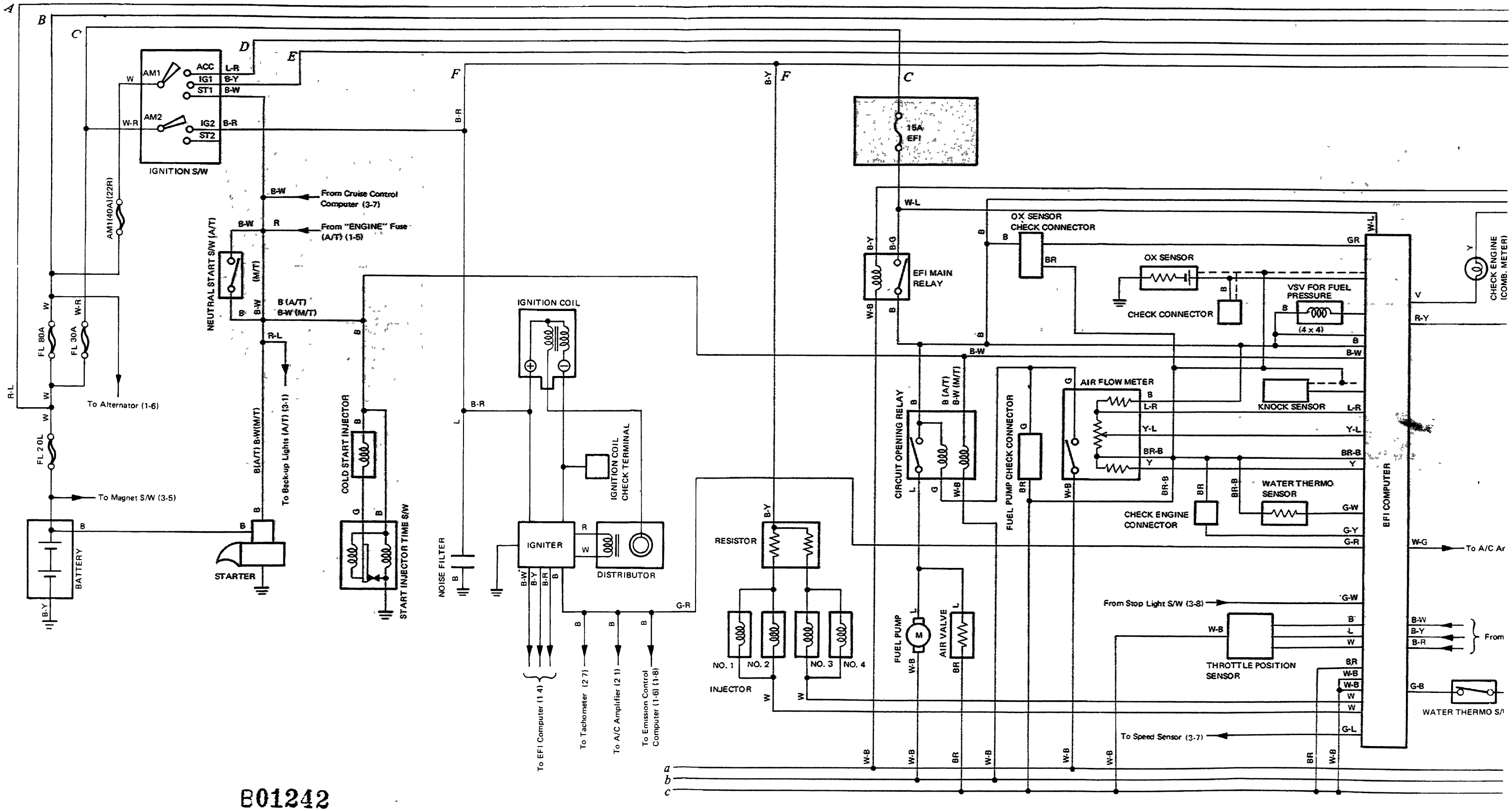

B01242

Ground points

a = Located under left front piller

b = Located in right front fender

c = Located on engine block

B00252

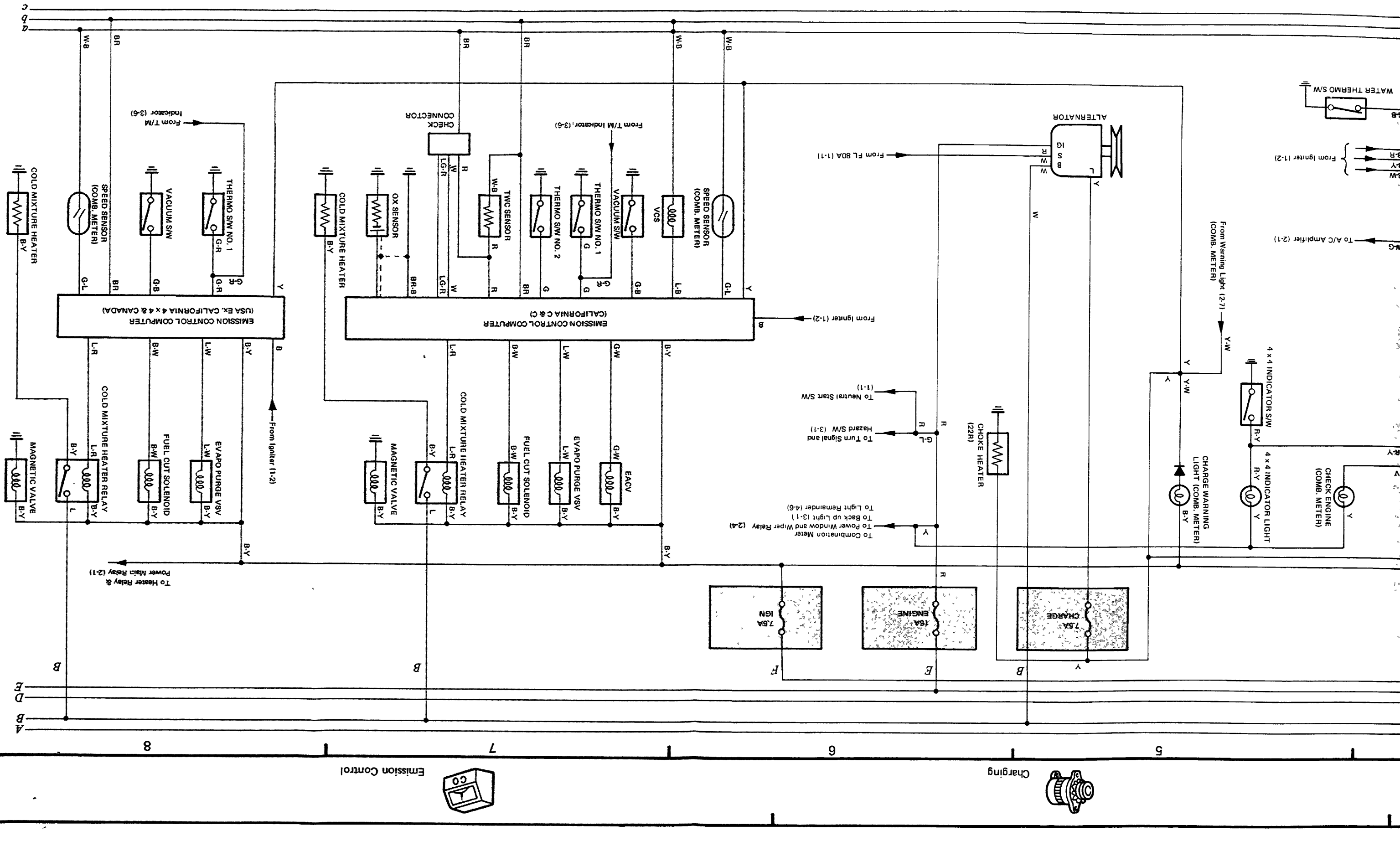
WATER THERMO S/W
G-B
From Igniter (1-2)
B-R
B-Y
B-W
To A/C Amplifier (2-1)
W-G
From Warning Light (2-7)
(COMB. METER)
Y-W
4 × 4 INDICATOR S/W
R-Y
4 × 4 INDICATOR LIGHT
CHECK ENGINE
(COMB. METER)
CHARGE WARNING
LIGHT (COMB. METER)
ALTERNATOR
IG
S
B
R
W
L
From FL 80A (1-1)
To Neutral Start S/W
(1-1)
To Turn Signal and
Hazard S/W (3-1)
To Combination Meter
To Power Window and Wiper Relay (2-4)
To Back up Light (3-1)
To Light Remainder (4-6)
CHOKE HEATER
(22R)
7.5A
IGN
15A
ENGINE
7.5A
CHARGE
From T/M Indicator (3-6)
CHECK
CONNECTOR
From T/M
Indicator (3-6)
COLD MIXTURE HEATER
SPEED SENSOR
(COMB. METER)
VACUUM S/W
THERMO S/W NO. 1
OX SENSOR
TWC SENSOR
THERMO S/W NO. 2
VCS
EMISSION CONTROL COMPUTER
(USA Ex. CALIFORNIA 4 × 4 & CANADA)
EMISSION CONTROL COMPUTER
(CALIFORNIA C & C)
From Igniter (1-2)
From Igniter (1-2)
COLD MIXTURE HEATER RELAY
FUEL CUT SOLENOID
EVAPO PURGE VSV
EACV
MAGNETIC VALVE
To Heater Relay &
Power Main Relay (2-1)
Charging
Emission Control

TOYOTA TRUCK AND 4 RUNNER (GASOLINE) (Cont'd) 2

Air Conditioner, Cooler and Heater

Rear Air Conditioner
(4 Runner)

Power Windows

1 2 3 4

A B D E

From "IGN" Fuse (1-8)

10A A/C

20A HEATER

20A RR HEATER

From "ENGINE" Fuse (1-6)

L(4 Runner)

From EFI Computer (1-4)

From Igniter (1-2)

W-R (22R-E)

W-B (22R-E)

IDLE-UP VSV

LOW PRESSURE S/W

A/C S/W

HEATER RELAY

REAR HEATER RELAY

POWER MAIN RELAY

BLOWER MOTOR

BLOWER RESISTOR

A/C AMPLIFIER

WARM-UP RELAY (4 x 4)

(W/O 4 x 4)

WATER TEMP.S/W (4 x 4)

MAGNET CLUTCH

THERMISTOR

(W/ A/C)

M1 M2 Lo Hi

HEATER BLOWER S/W

H L

POWER WINDOW MASTER S/W

UP DOWN

POWER WINDOW S/W

DRIVER

ASSISTANT

POWER WINDOW MOTOR

BACK DOOR WARNING LIGHT (COMB METER)

UNLOCK WARNING S/W

a b d e

Ground points

a = Located under left front piller

b = Located in right front fender

d = Located on left rear fender

e = Located on center of back panel

A
B
D
E

B

W

20A
PWR
CB

Y

Y R L

POWER WINDOW AND WIPER RELAY
(4 Runner)

G-Y
L-R

REAR WIPER MOTOR

G-Y
L-R

M

REAR WIPER RETRACTION DETECTION S/W

L-G L-O W-B

BACK DOOR WARNING LIGHT (COMB. METER)

Y

G-R

L-B L-Y R-Y G-Y L-B L-W R-L L L-R

POWER WINDOW MOTOR (BACK DOOR)

M

POWER WINDOW S/W

UP DOWN

L-G

BACK DOOR CONTROL S/W

UP DOWN

L-G

COVER TOP S/W

L-G

L L-R L-G L-O

	W	B	+1	C	S1	EW
OFF						
ON						
WASHER						

REAR WIPER AND WASHER S/W

UNLOCK WARNING S/W

G-R

DOOR LOCK DETECTION S/W

G-R L-R

POWER WINDOW LIMIT S/W

R-L

From Defogger S/W (3-4)

L-Y

REAR WASHER MOTOR

M

W-B

Y

OIL

Y-B

OIL PRESSURE WARNING LIGHT S/W

4WD

R-Y

4WD INDICATOR S/W

BRAKE

G-W G-W

BRAKE FLUID LEVEL S/W

W-B

G-W

PKB WARNING LIGHT S/W

G-W W-B

Y-W

To Charge Light Relay (1-4)

G

From Cruise Control Computer (3-7)

OIL

Y-B

OIL PRESSURE SENDER

VOLT

WATER TEMP

Y-G

WATER TEMP. SENDER

FUEL

Y-R

FUEL LEVEL SENDER

W-B

L

NOISE FILTER

TACH

B

From Igniter (1-2)

W-B W-B

W-B (22R-E) W-B W-B W-B (22R-E) W-B

a
b
d
e

Combination Meter | Back-up Light | Seat Belt | Overdrive

1 2 3 4

A B C D

To Heater Relay (1-8)
To Glow Plug Indicator Light (3-7)
To Charge Warning Light Relay (1-2)

GAUGES 7.5A

SEDIMENTER (For L)
SEDIMENTER WARNING BUZZER (For L)
SEDIMENTER WARNING LIGHT S/W (For L)
T. BELT (For L)
CANCEL S/W
4WD
4WD INDICATOR LIGHT S/W
OIL
OIL PRESSURE WARNING LIGHT S/W
BRAKE
BRAKE FLUID LEVEL S/W
PKB WARNING LIGHT S/W
VACUUM S/W (For L)
To Charge Light Relay (1-2)
From Cruise Control Computer (2-5)

WATER TEMP
WATER TEMP SENDER
FUEL
FUEL LEVEL SENDER
CONDENSER
TACH (For L)
TACH (For 22R)
PICKUP SENSOR
From Ignition Coil "–" (1-2)

OIL
OIL PRESSURE SENDER
VOLT

From "DOME" Fuse (3-4)
UNLOCK WARNING S/W

O/D INDICATOR LIGHT
O/D MAIN S/W
O/D RELAY
O/D SOLENOID
THERMO S/W

BACK-UP LIGHT S/W
LH
BACK-UP LIGHT
RH

SEAT BELT WARNING RELAY
SEAT BELT WARNING LIGHT (In Combination Meter)
SEAT BELT BUCKLE S/W
DOOR COURTESY S/W FRONT LH

MAIN
INDIC LIGH
CRUIS

a b c

Ground points

a = Located near regulator

b = Located instrument panel on right side bracket

c = Located in frame of last cross member

Cruise Control | Stop Light | Turn Signal and Hazard | Horn | Windshield Wiper and Washer

5 | 6 | 7 | 8

A
B
C
D

B
D
A
D

STOP 15A

TURN 7.5A

HAZ-HORN 15A

WIPER 20A

L

L L

L L

G-R

R

G-L

G-O

G-W

L

CRUISE CONTROL COMPUTER

B W | G-Y | G-B | G-R | Y-R | G-W | G-L | G | W-B | R-B R-W

S/W

G-R

R-B R-W

STOP LIGHT S/W

G-W

TURN SIGNAL & HAZARD S/W

		B1	B2	F	TB	TL	TR
TURN	RIGHT	○	○	○	○		○
	OFF	○	○	○			
	LEFT	○	○	○	○		
HAZARD	OFF	○	○	○			
	ON		○	○	○	○	○

G-W

HORN

G-R

WINDSHIELD WASHER MOTOR

M

L-W

WINDSHIELD WIPER & WASHER S/W

	B	S	+1	+2	C	E	W
OFF		○	○				
MIST	○	○	○				
INT		○	○		○	○	
LOW	○	○	○				
HIGH	○	○		○			
WASHER						○	○

L-R | L-B | L-O | L-Y | W-B

G

G-W

G-B

G-Y

FLASHER RELAY

G

G-W

W-B

G-R

HORN S/W

MAIN

SET

RESUME

B | B-W | G-Y | G-B

INDICATOR LIGHT

W-B

CRUISE CONTROL S/W

CRUISE CONTROL ACTUATOR

W-B

CRUISE CONTROL CLUTCH S/W (For M/T)

G-L

(For A/T)

G-L

G-W

G

To PKB Warning Light S/W & Brake Fluid Level S/W (2-1)

To Starter Motor (For M/T) or Neutral Start S/W (For A/T) (1-1)

SPEED SENSOR (In Combination Meter)

G L

BR

W-B

G-W

LH

G-W

STOP LIGHT

G-W

RH

W-B

W-B

INDICATOR LH (In Combination Meter)

G-B

FRONT LH

G-B

REAR LH

G-B

INDICATOR RH (In Combination Meter)

G-Y

FRONT RH

G-Y

REAR RH

G-Y

TURN SIGNAL LIGHT

WIPER RELAY (Intermittent)

L

L-W

L-R L-W

L B

L O

M

WINDSHIELD WIPER MOTOR

W B | W B | W B | W-B | W B | W B | W B | W-B | W B

a
b
c

Back-up Lights | Unlock and Seat Belt Warning | Turn Signal and Hazard | Horn | Rear Window Defogger

1 2 3 4

A B D E

From "ENGINE" Fuse (1-6)

10A HAZ-HORN

15A DEFOG

From "DOME" Fuse (4-5)

To Radio and Tape Player (4-8)

TURN SIGNAL AND HAZARD S/W (COMB. S/W)

		B1	B2	F	TB	TL	TR
TURN	RIGHT			○	○		○
	OFF			○			
	LEFT			○	○		
HAZARD	OFF			○			
	ON		○		○	○	

UNLOCK WARNING S/W

BACK-UP LIGHT S/W

SEAT BELT WARNING RELAY

TURN SIGNAL FLASHER

HORN

HORN S/W

DEFOGGER S/W

DEFOGGER RELAY

To Limit S/W (2-5) (W/ DEFOGGER RELAY)

From Neutral Start S/W (A/T) (1-1)

BACK-UP LIGHTS (RR.COMB.LIGHT)

SEAT BELT WARNING LIGHT (COMB. METER)

BUCKLE S/W

To Door Courtesy S/W Front LH (4-4)

INDICATOR LH (COMB. METER)

INDICATOR RH (COMB. METER)

FRONT LH

FRONT RH

REAR LH

REAR RH

TURN SIGNAL LIGHTS

(W/ DEFOGGER RELAY)

(W/O DEFOGGER RELAY)

REAR WINDOW DEFOGGER

(22R-E)

a b

Ground points a = Located under left front piller b = Located in right front fender

Winch | Front Wiper and Washer | Overdrive | Cruise Control | Stop Lights

5 | 6 | 7 | 8

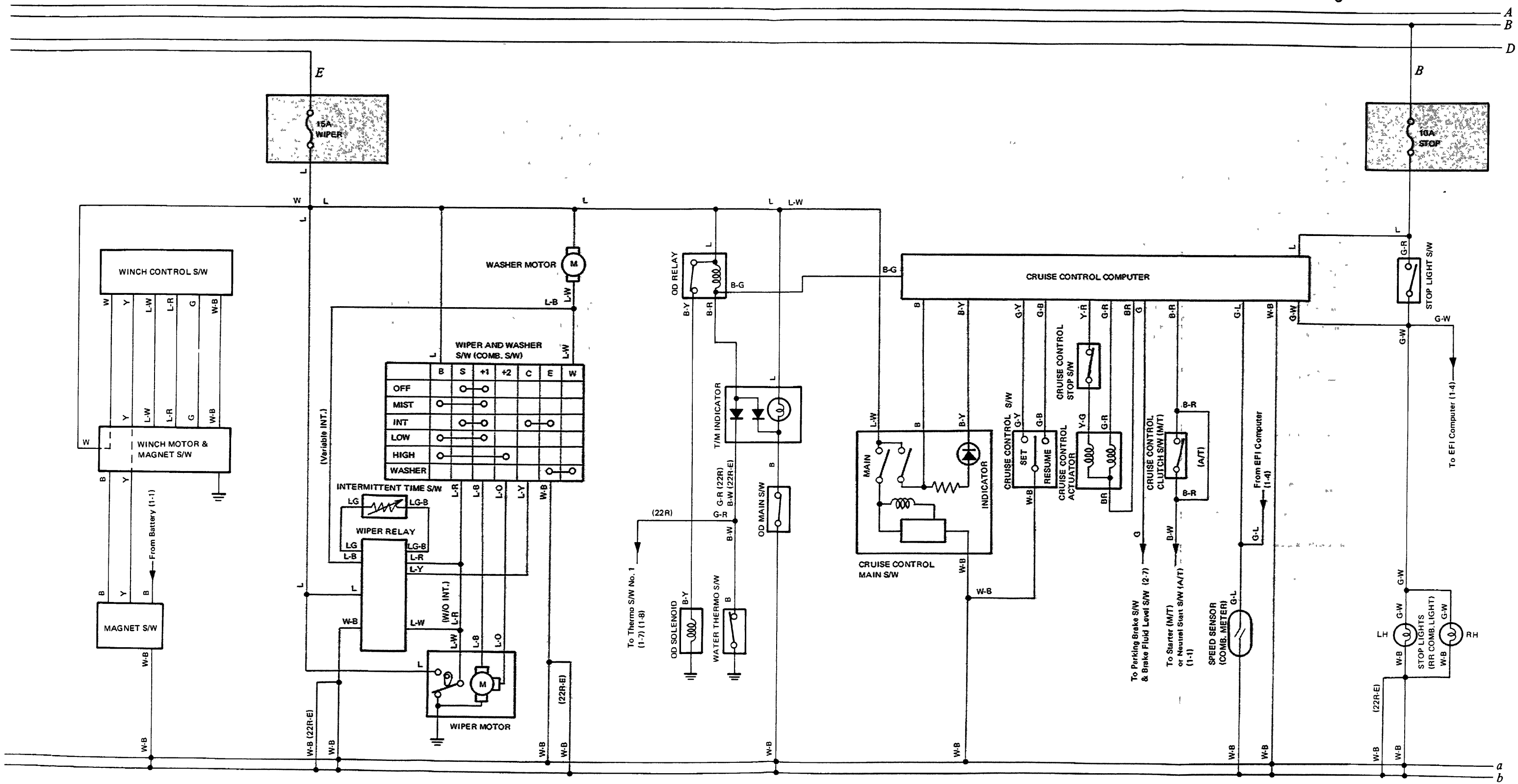

Work Light

Taillights and Illumination

Headlights

1 2 3 4

A B D

15A TAIL

10A HEAD LH

10A HEAD RH

7.5A DOME

To Clock (Digital) (4-6)

DECK LIGHT S/W

DECK LIGHT

CLINOMETER & ALTIMETER

HEATER CONTROL

A/T INDICATOR

O/D S/W

RADIO

COMBINATION METER

DEFOGGER S/W

CRUISE CONTROL S/W

RHEOSTAT

POWER WINDOW S/W (BACK DOOR) (4 Runner)

REAR WIPER AND WASHER S/W (4 Runner)

REAR SIDE MARKER RH

TAIL RH

LICENSE PLATE RH

REAR SIDE MARKER LH

TAIL LH

LICENSE PLATE LH

CLEARANCE RH

CLEARANCE LH

TAILLIGHT RELAY

HEADLIGHT RELAY

HEADLIGHT LH

HEADLIGHT RH

HIGH BEAM INDICATOR LIGHT (COMB. METER)

	T	EL	H
OFF			
TAIL	○		
HEAD	○	○	○

LIGHT CONTROL S/W

	HF	HU	HL	ED
FLASH	○			○
LOW			○	○
HIGH	○		○	○

DIMMER S/W

DECK LIGHT S/W (4 Runner)

REAR ROOM LIGHT (4 Runner)

From Seat Belt Warning Relay (3-2)

(W/Seat Belt Warning Relay)

INTERIOR LIGHT

ON

DOOR

FRONT LH

FRONT RH

DOOR COURTESY S/

(22R-E)

a b e

Ground points

a = Located under left front piller

b = Located in right front fender

e = Located on center of back panel

Interior Lights

Clock

Cigarette Lighter

Auto Antenna

Radio and Tape Player

5 6 7 8

B D

7.5A DOME

15A CIG

From "ENGINE" Fuse (1-6)

From "HAZ-HORN" Fuse (3-2)

B-W

To Unlock Warning S/W (3-1)

INTERIOR LIGHT

DOOR

LIGHT REMAINDER

R-W

B-W G R-G R-G R-G R-G R-G R-G

R-G

B-W

B-W

LH RH

DOOR COURTESY LIGHT

B B B

R W B R-Y

IGNITION KEY CYLINDER LIGHT

W-B

CLOCK (Digital)

10:00

R-W R-G G W-B

From "TAIL" Fuse (4-1)

CIGARETTE LIGHTER

R-G W-B

ANTENNA MOTOR S/W

R-G R-G

UP DOWN UP DOWN

W-B

LG LG-W

M

ANTENNA MOTOR

R-G B-W

REAR RH

LG-R LG

SPEAKER

REAR LH

LG-Y LG-B

FRONT RH

LG-R LG

SPEAKER

FRONT LH

LG-Y LG-B

B-W W-B W-B W-B

RADIO AND TAPE PLAYER

POWER AMPLIFIER

WOOFER

W-B

R-G B-W

LG-R LG

B W W-B

REAR RH

SPEAKER

LG-Y LG-B

REAR LH

W-B

LG-R LG

FRONT RH

SPEAKER

LG-Y LG-B

FRONT LH

RADIO AND TAPE PLAYER

W-B

FRONT RH

DOOR COURTESY S/W

W-B W-B W-B W-B W-B W-B W-B W-B

a b e